Washington State Department of Transportation

Publications Transmittal

Transmittal Number	Date
PT 08-029	**May 2008**
Publication Distribution: To: All *Bridge Design Manual* holders	
Publication Title: *Bridge Design Manual*	Publication Number: M 23-50
Originating Organization: Washington State Department of Transportation, and Bridge Design Office through Engineering Publications	

Remarks and Instructions

Remarks:

The May 2008 *Bridge Design Manual* (BDM) M 23-50 underwent a complete update and is being republished in its entirety.

Additional copies may be purchased from:
Washington State Department of Transportation
Finance and Administration
Directional Documents and Engineering Publications
PO BOX 47408
Olympia, WA 98504-7408

Phone: (360) 705-7430
Fax: (360) 705-6861
E-mail: engrpubs@wsdot.wa.gov

Please e-mail us if you no longer desire to receive updates, have a quantity change, or your address has changed.

Instructions:
Please remove and recycle the contents of the old *Bridge Design Manual* and replace with new. Changes are effective upon receipt.

Distributed By	Phone Number	Signature
Directional Documents and Engineering Publications	(360) 705-7430 FAX: 705-6861	/s/ Joe Fahoum

Washington State
Department of Transportation

TECHNICAL MANUAL

Bridge Design Manual

M 23-50.02

May 2008

Bridge and Structures Office
Engineering and Regional Operations

Americans with Disabilities Act (ADA) Information

Materials can be provided in alternative formats: large print, Braille, cassette tape, or on computer disk for people with disabilities by calling the Office of Equal Opportunity (OEO) at 360-705-7097. Persons who are deaf or hard of hearing may contact OEO through the Washington Relay Service at 7-1-1.

Title VI Notice to Public

It is the Washington State Department of Transportation's (WSDOT) policy to assure that no person shall, on the grounds of race, color, national origin or sex, as provided by Title VI of the Civil Rights Act of 1964, be excluded from participation in, be denied the benefits of, or be otherwise discriminated against under any of its federally funded programs and activities. Any person who believes his/her Title VI protection has been violated, may file a complaint with WSDOT's Office of Equal Opportunity (OEO). For Title VI complaint forms and advice, please contact OEO's Title VI Coordinator at 360-705-7098 or 509-324-6018.

To get the latest information on WSDOT administrative and engineering manuals, sign up for e-mail updates for individual manuals at: www.wsdot.wa.gov/publications/manuals

Washington State Department of Transportation
Administrative and Engineering Publications
PO Box 47304
Olympia, WA 98504-7304

Phone: 360-705-7430
E-mail: engrpubs@wsdot.wa.gov
Internet: www.wsdot.wa.gov/publications/manuals

Foreword

This manual has been prepared to provide Washington State Department of Transportation (WSDOT) bridge design engineers with a guide to the design criteria, analysis methods, and detailing procedures for the preparation of highway bridge and structure construction plans, specifications, and estimates.

It is not intended to be a textbook on structural engineering. It is a guide to acceptable WSDOT practice. This manual does not cover all conceivable problems that may arise, but is intended to be sufficiently comprehensive to, along with sound engineering judgment, provide a safe guide for bridge engineering.

A thorough knowledge of the contents of this manual is essential for a high degree of efficiency in the engineering of WSDOT highway structures.

This loose leaf form of this manual facilitates modifications and additions. New provisions and revisions will be issued from time to time to keep this guide current. Suggestions for improvement and updating the manual are always welcome.

All manual modifications must be approved by the Bridge Design Engineer.

The electronic version of this document is available at:
www.wsdot.wa.gov/Publications/Manuals/M23-50.htm

/s/ Jugesh Kapur

Jugesh Kapur, P.E., S.E.
Bridge and Structures Engineer
Washington State Department of Transportation

Chapter 1 General Information Contents

1.1	**Manual Description**		1.1-1
	1.1.1	Purpose	1.1-1
	1.1.2	Specifications	1.1-1
	1.1.3	Format	1.1-1
	1.1.4	Revisions	1.1-3
1.2	**Bridge and Structures Office Organization**		1.2-1
	1.2.1	General	1.2-1
	1.2.2	Organizational Elements of the Bridge Office	1.2-1
	1.2.3	Design Unit Responsibilities and Expertise	1.2-5
1.3	**Quality Control/Quality Assurance (QC/QA) Procedure**		1.3-1
	1.3.1	General	1.3-1
	1.3.2	Design/Check Procedures	1.3-2
	1.3.3	Design/Check Calculation File	1.3-10
	1.3.4	PS&E Review Period	1.3-11
	1.3.5	Addenda	1.3-11
	1.3.6	Shop Plans and Permanent Structure Construction Procedures	1.3-12
	1.3.7	Contract Plan Changes (Change Orders and As-Builts)	1.3-14
	1.3.8	Archiving Design Calculations, Design Files, and S&E Files	1.3-16
	1.3.9	Public Disclosure Policy Regarding Bridge Plans	1.3-17
	1.3.10	Use of Computer Software	1.3-17
1.4	**Coordination With Other Divisions and Agencies**		1.4-1
	1.4.1	Preliminary Planning Phase	1.4-1
	1.4.2	Final Design Phase	1.4-1
1.5	**Bridge Design Scheduling**		1.5-1
	1.5.1	General	1.5-1
	1.5.2	Preliminary Design Schedule	1.5-1
	1.5.3	Final Design Schedule	1.5-1
1.6	**Guidelines for Bridge Site Visits**		1.6-1
	1.6.1	Bridge Rehabilitation Projects	1.6-1
	1.6.2	Bridge Widening and Seismic Retrofits	1.6-1
	1.6.3	Rail and Minor Expansion Joint Retrofits	1.6-1
	1.6.4	New Bridges	1.6-1
	1.6.5	Bridge Demolition	1.6-2
	1.6.6	Proximity of Railroads Adjacent to the Bridge Site	1.6-2
1.99	**Bibliography**		1.99-1

Appendix A

Appendix 1.5-A1	Breakdown of Project Manhours Required Form	1.5-A1-1
Appendix 1.5-A2	Monthly Project Progress Report Form	1.5-A2-1
Appendix 1.5-A3	QA/QC Signature Sheet	1.5-A3-1

Chapter 2 Preliminary Design

2.1	**Preliminary Studies**		2.1-1
	2.1.1	Interdisciplinary Design Studies	2.1-1
	2.1.2	Value Engineering Studies	2.1-1
	2.1.3	Preliminary Recommendations for Bridge Rehabilitation Projects	2.1-2
	2.1.4	Preliminary Recommendations for New Bridge Projects	2.1-2
	2.1.5	Type, Size, and Location (TS&L) Reports	2.1-3
2.2	**Preliminary Plan**		2.2-1
	2.2.1	Development of the Preliminary Plan	2.2-1
	2.2.2	Documentation	2.2-2
	2.2.3	General Factors for Consideration	2.2-3
	2.2.4	Permits	2.2-5
	2.2.5	Preliminary Cost Estimate	2.2-6
	2.2.6	Approvals	2.2-6
2.3	**Preliminary Plan Criteria**		2.3-1
	2.3.1	Highway Crossings	2.3-1
	2.3.2	Railroad Crossings	2.3-4
	2.3.3	Water Crossings	2.3-6
	2.3.4	Bridge Widenings	2.3-8
	2.3.5	Detour Structures	2.3-9
	2.3.6	Retaining Walls and Noise Walls	2.3-9
	2.3.7	Bridge Deck Drainage	2.3-9
	2.3.8	Bridge Deck Protective Systems	2.3-9
	2.3.9	Construction Clearances	2.3-10
	2.3.10	Design Guides for Falsework Depth Requirements	2.3-10
	2.3.11	Inspection and Maintenance Access	2.3-11
2.4	**Selection of Structure Type**		2.4-1
	2.4.1	Bridge Types	2.4-1
	2.4.2	Wall Types	2.4-6
2.5	**Aesthetic Considerations**		2.5-1
	2.5.1	General Visual Impact	2.5-1
	2.5.2	End Piers	2.5-1
	2.5.3	Intermediate Piers	2.5-2
	2.5.4	Barrier and Wall Surface Treatments	2.5-2
	2.5.5	Superstructure	2.5-3

2.6 Miscellaneous 2.6-1
2.6.1 Structure Costs 2.6-1
2.6.2 Handling and Shipping Precast Members and Steel Beams 2.6-1
2.6.3 Salvage of Materials 2.6-1

2.7 WSDOT Standard Highway Bridge 2.7-1
2.7.1 Design Elements 2.7-1
2.7.2 Detailing the Preliminary Plan 2.7-2

2.99 Bibliography 2.99-1

Appendix A
Appendix 2.2-A1 Bridge Site Date General 2.2-A1-1
Appendix 2.2-A2 Bridge Site Date Rehabilitation 2.2-A2-1
Appendix 2.2-A3 Bridge Site Date Stream Crossing 2.2-A3-1
Appendix 2.2-A4 Preliminary Plan Checklist 2.2-A4-1
Appendix 2.3-A1 Bridge Stage Construction Comparison 2.3-A1-1
Appendix 2.3-A2-1 2.3-A2-1
Appendix 2.4-A1-1 2.4-A1-1
Appendix 2.7-A1-1 2.7-A1-1

Appendix B
Appendix 2-B-1 2-B-1
Appendix 2-B-2 2-B-2
Appendix 2-B-3 2-B-3
Appendix 2-B-4 2-B-4
Appendix 2-B-5 2-B-5
Appendix 2-B-6 2-B-6
Appendix 2-B-7 2-B-7
Appendix 2-B-8 2-B-8
Appendix 2-B-9 2-B-9
Appendix 2.3-B2-1 Protective Screening Details 2.3-B2-1

Chapter 3 Loads

3.1	**Scope**	3.1-1
3.2	**Definitions**	3.2-1
3.3	**Load Designations**	3.3-1
3.4	**Limit States**	3.4-1
3.5	**Load Factors and load combinations**	3.5-1
3.5.1	Load Factors for Substructure	3.5-2
3.6	**Loads and Load factors for construction**	3.6-1
3.7	**Load factors for Post-tensioning**	3.7-1
3.7.1	Post-tensioning Effects from Superstructure	3.7-1
3.7.2	Secondary Forces from Post-Tensioning, PS	3.7-1
3.8	**Permanent Loads**	3.8-i
3.8.1	Deck Overlay Requirement	3.8-i
3.9	**Live Loads**	3.9-1
3.9.1	Live Load Designation	3.9-1
3.9.2	Live Load Analysis of Continuous Bridges	3.9-1
3.9.3	Loading for Live Load Deflection Evaluation	3.9-1
3.9.4	Distribution to Superstructure	3.9-1
3.10	**Pedestrian Loads**	3.10-1
3.11	**Wind Loads**	3.11-1
3.11.1	Wind Load to Superstructure	3.11-1
3.11.2	Wind Load to Substructure	3.11-1
3.11.3	Wind on Noise Walls	3.11-1
3.12	**Noise Barriers**	3.12-1
3.13	**Earthquake Effects**	3.13-1

3.14 Earth Pressure 3.14-1

3.15 Force Effects due to superimposed deformations 3.15-1

3.16 Other Loads 3.16-1
3.16.1 Buoyancy 3.16-1
3.16.2 Collision Force on Bridge Substructure 3.16-1
3.16.3 Collision Force on Traffic Barrier 3.16-1
3.16.4 Force from Stream Current, Floating Ice, and Drift 3.16-1
3.16.5 Ice Load 3.16-1

3.99 Bibliography 3.99-1

Appendix A
Appendix 3.1-A1 Torsional Constants of Common Sections 3.1-A1-1

Appendix B
Appendix 3.1-B1 HL-93 Loading for Bridge Piers 3.1-B1-1

Chapter 4 Seismic Design and Retrofit

4.1 General 4.1-1

4.2 WSDOT Modifications to AASHTO Guide specifications for LRFD Seismic Bridge Design 4.2-1

4.3 Seismic Analysis and Retrofit Design of Existing Bridges 4.3-1
4.3.1 General 4.3-1
4.3.2 Seismic Analysis Requirements 4.3-1
4.3.3 Seismic Retrofit Design 4.3-1
4.3.4 Computer Analysis Verification 4.3-6
4.3.5 Earthquake Restrainers 4.3-6

4.99 Bibliography 4.99-1

Appendix A
Appendix 4.1-A1 Earthquake Probability - Poisson Model 4.1-A1-1

Appendix B
Appendix 4.6-B1 Design Examples of Seismic Retrofits 4.6-B1-1

Chapter 5 Concrete Structures

5.0	**General**		5.0-1
5.1	**Material Properties**		5.1-1
	5.1.1	Concrete Properties	5.1-1
	5.1.2	Reinforcing Steel	5.1-6
	5.1.3	Prestressing Steel	5.1-13
	5.1.4	Prestress Losses	5.1-17
	5.1.5	Prestressing Anchorage Systems	5.1-22
	5.1.6	Ducts	5.1-22
5.2	**Design Consideration**		5.2-1
	5.2.1	Design Limit States	5.2-1
	5.2.2	Design Criteria	5.2-1
	5.2.3	Service Limit State	5.2-2
	5.2.4	Strength Limit State	5.2-3
	5.2.5	Strut-and-tie Model	5.2-13
	5.2.6	Deflection and Camber	5.2-13
	5.2.7	Serviceability	5.2-15
	5.2.8	Connections (Joints)	5.2-15
	5.2.9	Revised Provisions for Flexural Design	5.2-16
	5.2.10	Shrinkage and Temperature Reinforcement	5.2-20
	5.2.11	Minimum Reinforcement Requirement	5.2-21
5.3	**Reinforced Concrete Box Girder Bridges**		5.3-1
	5.3.1	Box Girder Basic Geometries	5.3-1
	5.3.2	Reinforcement	5.3-6
	5.3.3	Crossbeam	5.3-14
	5.3.4	End Diaphragm	5.3-19
	5.3.5	Dead Load Deflection and Camber	5.3-22
	5.3.6	Thermal Effects	5.3-23
	5.3.7	Hinges	5.3-23
	5.3.8	Utility Openings	5.3-23
5.4	**Hinges and Inverted T-Beam Pier Caps**		5.4-1
5.5	**Bridge Widenings**		5.5-1
	5.5.1	Review of Existing Structures	5.5-1
	5.5.2	Analysis and Design Criteria	5.5-2
	5.5.3	Removing Portions of the Existing Structure	5.5-6
	5.5.4	Attachment of Widening to Existing Structure	5.5-7
	5.5.5	Expansion Joints	5.5-18
	5.5.6	Possible Future Widening for Current Designs	5.5-20
	5.5.7	Bridge Widening Falsework	5.5-20
	5.5.8	Existing Bridge Widenings	5.5-20

5.6 Precast Prestressed Girder Superstructures 5.6-1
5.6.1 WSDOT Standard Prestressed Girders 5.6-1
5.6.2 Criteria for Girder Design 5.6-4
5.6.3 Fabrication and Handling 5.6-12
5.6.4 Superstructure Optimization 5.6-16
5.6.5 Repair of Damaged Girders at Fabrication 5.6-20
5.6.6 Repair of Damaged Bridge Girders 5.6-21
5.6.7 Short Span Precast Prestressed Bridges 5.6-23
5.6.8 Prestressed Concrete Precast Tub Girders 5.6-24
5.6.9 Prestressed Girder Checking Requirement 5.6-24
5.6.10 Review of shop plans for pretensioned girders 5.6-25

5.7 Roadway Slab 5.7-1
5.7.1 Roadway Slab Requirements 5.7-1
5.7.2 Slab Reinforcement 5.7-3
5.7.3 Stay-In-Place Deck Panels 5.7-9
5.7.4 Concrete Bridge Deck Protection Systems 5.7-10

5.8 Cast-in-Place Post-tensioned Bridges 5.8-1
5.8.1 Design Parameters 5.8-1
5.8.2 Analysis 5.8-10
5.8.3 Post-tensioning 5.8-12
5.8.4 Shear 5.8-17
5.8.5 Temperature Effects 5.8-19
5.8.6 Construction 5.8-20
5.8.7 Post-Tensioning Notes — Cast-in-Place Girders 5.8-22

5.9 Spliced Precast Girders 5.9-1
5.9.1 Definitions 5.9-1
5.9.2 WSDOT Criteria for use of Spliced Girders 5.9-2
5.9.3 Girder Segment Design 5.9-3
5.9.4 Joints Between Segments 5.9-4
5.9.5 Review of shop plans for precast post-tensioned spliced-girders 5.9-5
5.9.6 Post-Tensioning Notes ~ Precast Post-Tensioning Spliced-Girders 5.9-6

5.99 Bibliography 5.99-1

Appendix A
Appendix 5.1-A1 Standard Hooks 5.1-A1-1
Appendix 5.1-A2 Minimum Reinforcement Clearance and Spacing for Beams and Columns 5.1-A2-1
Appendix 5.1-A3 Reinforcing Bar Properties 5.1-A3-1
Appendix 5.1-A4 Tension Development Length of Deformed Bars 5.1-A4-1
Appendix 5.1-A5 Compression Development Length and Minimum Lap Splice of Grade 60 Bars 5.1-A5-1
Appendix 5.1-A6 Tension Development Lengthof 90º and 180º Standard Hooks 5.1-A6-1
Appendix 5.1-A7 Tension Lap Splice Lengths of Grade 60 Uncoated Bars ~ Class B 5.1-A7-1
Appendix 5.1-A8 Prestressing Strand Properties and Development Length 5.1-A8-1

Appendix 5.2-A1	Working Stress Design	5.2-A1-1
Appendix 5.2-A2	Working Stress Design	5.2-A2-1
Appendix 5.2-A3	Working Stress Design	5.2-A3-1
Appendix 5.3-A1	Positive Moment Reinforcement	5.3-A1-1
Appendix 5.3-A2	Negative Moment Reinforcement	5.3-A2-1
Appendix 5.3-A3	Adjusted Negative Moment Case I (Design for M @ Face of Support)	5.3-A3-1
Appendix 5.3-A4	Adjusted Negative Moment Case II (Design for M @ 1/4 Point)	5.3-A4-1
Appendix 5.3-A5	Cast-In-Place Deck Slab Design for Positive Moment Regions f'c=4, 0 ksi	5.3-A5-1
Appendix 5.3-A6	Cast-In-Place Deck Slab Design for Negative Moment Regions f'c=4, 0 ksi	5.3-A6-1
Appendix 5.3-A7	Slab Overhang Design-Interior Barrier Segment	5.3-A7-1
Appendix 5.3-A8	Slab Overhang Design-End Barrier Segment	5.3-A8-1
Appendix 5.6-A1-1A	Span Capability of Prestressed W Girders with Future Wearing Surface	5.6-A1-1A -1
Appendix 5.6-A1-1B	Span Capability of W Girders without Future Wearing Surface	5.6-A1-1B-1
Appendix 5.6-A1-2A	Span Capability of Prestressed Wide Flange Girders with Future Wearing Surface	5.6-A1-2A-1
Appendix 5.6-A1-2B	Span Capability of Prestressed Wide Flange Girders without Future Wearing Surface	5.6-A1-2B-1
Appendix 5.6-A1-3	Span Capability of Thin Flange Bulb Tee Girders	5.6-A1-3-1
Appendix 5.6-A1-4	Span Capability of Trapezoidal Tub Girders without Top Flange	5.6-A1-4-1
Appendix 5.6-A1-5	Span Capability of Trapezoidal Tub Girders with Top Flange for S-I-P Deck Panels	5.6-A1-5-1
Appendix 5.6-A1-6	Span Capability of 1'-0" Solid Slabs with 5" CIP Topping	5.6-A1-6-1
Appendix 5.6-A1-7	Span Capability of 1'-6" Voided Slab with 5" CIP Topping	5.6-A1-7-1
Appendix 5.6-A1-8	Span Capability of 2'-2" Voided Slab with 5" CIP Topping	5.6-A1-8-1
Appendix 5.6-A1-9	Span Capability of Precast Prestressed Double Tee Girders	5.6-A1-9-1
Appendix 5.6-A1-10	Span Capability Precast Prestressed Ribbed Girders	5.6-A1-10-1
Appendix 5.6-A1-11	Span Capability of Deck Bulb Tee Girders	5.6-A1-11-1
Appendix 5.6-A1-12	Span Capability of Post-Tensioned Spliced I-Girders	5.6-A1-12-1
Appendix 5.6-A1-13	Span Capability of Post-Tensioned Spliced Tub Girders	5.6-A1-13-1
Appendix 5.6-A1-1	I-Girder Section	5.6-A1-1
Appendix 5.6-A1-2	Decked Girder Section	5.6-A1-2
Appendix 5.6-A1-3	Spliced-Girder Section	5.6-A1-3
Appendix 5.6-A1-4	Tub Section	5.6-A1-4
Appendix 5.6-A2-1	Single Span Prestressed Girder Construction Sequence	5.6-A2-1
Appendix 5.6-A2-2	Multiple Span Prestressed Girder Construction Sequence	5.6-A2-2
Appendix 5.6-A2-3	Raised Crossbeam Prestressed Girder Construction Sequence	5.6-A2-3
Appendix 5.6-A3-1	W42G Girder Details 1 of 2	5.6-A3-1
Appendix 5.6-A3-2	W42G Girder Details 2 of 2	5.6-A3-2
Appendix 5.6-A3-3	W42G End Diaphragm on Girder Details	5.6-A3-3
Appendix 5.6-A3-4	W42G Abutment Type Pier Diaphragm Details	5.6-A3-4
Appendix 5.6-A3-5	W42G Fixed Flush-Face Diaphragm at Intermediate Pier Details	5.6-A3-5
Appendix 5.6-A3-6	W42G Fixed Recessed-Face Diaphragm at Intermediate Pier Details	5.6-A3-6
Appendix 5.6-A3-7	W42G Hinge Diaphragm at Intermediate Pier Details	5.6-A3-7
Appendix 5.6-A3-8	W42G Intermediate Diaphragm Details	5.6-A3-8

Appendix 5.6-A3-9	W42G Miscellaneous Bearing Details	5.6-A3-9
Appendix 5.6-A4-1	W50G Girder Details 1 of 2	5.6-A4-1
Appendix 5.6-A4-2	W50G Girder Details 2 of 2	5.6-A4-2
Appendix 5.6-A4-3	W50G End Diaphragm on Girder Details	5.6-A4-3
Appendix 5.6-A4-4	W50G Abutment Type Pier Diaphragm Details	5.6-A4-4
Appendix 5.6-A4-5	W50G Fixed Flush-Face Diaphragm at Intermediate Pier Details	5.6-A4-5
Appendix 5.6-A4-6	W50G Fixed Recessed-Face Diaphragm at Intermediate Pier Details	5.6-A4-6
Appendix 5.6-A4-7	W50G Hinge Diaphragm at Intermediate Pier Details	5.6-A4-7
Appendix 5.6-A4-8	W50G Intermediate Diaphragm Details	5.6-A4-8
Appendix 5.6-A4-9	W50G Miscellaneous Bearing Details	5.6-A4-9
Appendix 5.6-A5-1	W58G Girder Details 1 of 3	5.6-A5-1
Appendix 5.6-A5-2	W58G Girder Details 2 of 3	5.6-A5-2
Appendix 5.6-A5-3	W58G Girder Details 3 of 3	5.6-A5-3
Appendix 5.6-A5-4	W58G End Diaphragm on Girder Details	5.6-A5-4
Appendix 5.6-A5-5	W58G Abutment Type Pier Diaphragm Details	5.6-A5-5
Appendix 5.6-A5-6	W58G Fixed Flush-Face Diaphragm at Intermediate Pier Details	5.6-A5-6
Appendix 5.6-A5-7	W58G Fixed Recessed-Faces Diaphragm at Intermediate Pier Details	5.6-A5-7
Appendix 5.6-A5-8	W58G Intermediate Diaphragm Details	5.6-A5-8
Appendix 5.6-A5-9	W58G Miscellaneous Bearing Details	5.6-A5-9
Appendix 5.6-A5-10	W58G Miscellaneous Bearing Details	5.6-A5-10
Appendix 5.6-A6-1	W74G Girder Details 1 of 3	5.6-A6-1
Appendix 5.6-A6-2	W74G Girder Details 2 of 3	5.6-A6-2
Appendix 5.6-A6-3	W74G Girder Details 3 of 3	5.6-A6-3
Appendix 5.6-A6-4	W74G Abutment Type Pier Diaphragm Details	5.6-A6-4
Appendix 5.6-A6-5	W74G Fixed Flush-Face Diaphragm at Intermediate Pier Details	5.6-A6-5
Appendix 5.6-A6-6	W74G Fixed Recessed-Face Diaphragm at Intermediate Pier Details	5.6-A6-6
Appendix 5.6-A6-7	W74G Hinge Diaphragm at Intermediate Pier Details	5.6-A6-7
Appendix 5.6-A6-8	W74G Intermediate Diaphragm Details	5.6-A6-8
Appendix 5.6-A6-9	W74G Miscellaneous Bearing Details	5.6-A6-9
Appendix 5.6-A6-10	W74G Miscellaneous Bearing Details	5.6-A6-10
Appendix 5.6-A7-1	Girder Details 3 of 3	5.6-A7-1
Appendix 5.6-A7-2	Additional Extended Strands	5.6-A7-2
Appendix 5.6-A7-3	Miscellaneous Bearing Details	5.6-A7-3
Appendix 5.6-A7-4	WF42G Girder Details 1 of 3	5.6-A7-4
Appendix 5.6-A7-5	WF42G Girder Details 2 of 3	5.6-A7-5
Appendix 5.6-A7-6	WF42G End Diaphragm on Girder Details	5.6-A7-6
Appendix 5.6-A7-7	WF42G Abutment Type Pier Diaphragm Details	5.6-A7-7
Appendix 5.6-A7-8	WF42G Fixed Flush-Face Diaphragm at Intermediate Pier Details	5.6-A7-8
Appendix 5.6-A7-9	WF42G Fixed Recessed-Face Diaphragm at Intermediate Pier Details	5.6-A7-9
Appendix 5.6-A7-10	WF42G Intermediate Diaphragm Details	5.6-A7-10
Appendix 5.6-A7-11	WF42G Hinge Diaphragm at Intermediate Pier Details	5.6-A7-11
Appendix 5.6-A8-1	WF50G Girder Details 1 of 3	5.6-A8-1
Appendix 5.6-A8-2	WF50G Girder Details 2 of 3	5.6-A8-2
Appendix 5.6-A8-3	WF50G End Diaphragm on Girder Details	5.6-A8-3
Appendix 5.6-A8-4	WF50G Abutment Type Pier Diaphragm Details	5.6-A8-4

Appendix 5.6-A8-5	WF50G Fixed Flush-Face Diaphragm at Intermediate Pier Details	5.6-A8-5
Appendix 5.6-A8-6	WF50G Fixed Recessed-Face Diaphragm at Intermediate Pier Details	5.6-A8-6
Appendix 5.6-A8-7	WF50G Hinge Diaphragm at Intermediate Pier Details	5.6-A8-7
Appendix 5.6-A8-8	WF50G Intermediate Diaphragm Details	5.6-A8-8
Appendix 5.6-A9-1	WF58G Girder Details 1 of 3	5.6-A9-1
Appendix 5.6-A9-2	WF58G Girder Details 2 of 3	5.6-A9-2
Appendix 5.6-A9-3	WF58G End Diaphragm on Girder Details	5.6-A9-3
Appendix 5.6-A9-4	WF58G Abutment Type Pier Diaphragm Details	5.6-A9-4
Appendix 5.6-A9-5	WF58G Fixed Flush-Face Diaphragm at Intermediate Pier Details	5.6-A9-5
Appendix 5.6-A9-6	WF58G Fixed Recessed-face Diaphragm at Intermediate Pier Details	5.6-A9-6
Appendix 5.6-A9-7	WF58G Hinge Diaphragm at Intermediate Pier Details	5.6-A9-7
Appendix 5.6-A9-8	WF58G Intermediate Diaphragm Details	5.6-A9-8
Appendix 5.6-A10-1	WF74G Girder Details 1 of 3	5.6-A10-1
Appendix 5.6-A10-2	WF74G Girder Details 2 of 3	5.6-A10-2
Appendix 5.6-A10-3	WF74G End Diaphragm on Girder Details	5.6-A10-3
Appendix 5.6-A10-4	WF74G Abutment Type Pier Diaphragm Details	5.6-A10-4
Appendix 5.6-A10-5	WF74G Fixed Flush-Face Diaphragm at Intermediate Pier Details	5.6-A10-5
Appendix 5.6-A10-6	WF74G Fixed Recessed-Face Diaphragm at Intermediate Pier Details	5.6-A10-6
Appendix 5.6-A10-7	WF74G Hinge Diaphragm at Intermediate Pier Details	5.6-A10-7
Appendix 5.6-A10-8	WF74G Intermediate Diaphragm Details	5.6-A10-8
Appendix 5.6-A11-1	WF83G Girder Details 1 of 3	5.6-A11-1
Appendix 5.6-A11-2	WF83G Girder Details 2 of 3	5.6-A11-2
Appendix 5.6-A11-3	WF83G End Diaphragm on Girder Details	5.6-A11-3
Appendix 5.6-A11-4	WF83G Abutment Type Pier Diaphragm Details	5.6-A11-4
Appendix 5.6-A11-5	WF83G Fixed Flush-Face Diaphragm at Intermediate Pier Details	5.6-A11-5
Appendix 5.6-A11-6	WF83G Fixed Recessed-Face Diaphragm at Intermediate Pier Details	5.6-A11-6
Appendix 5.6-A11-7	WF83G Hinge Diaphragm at Intermediate Details	5.6-A11-7
Appendix 5.6-A11-8	WF83G Intermediate Diaphragm Details	5.6-A11-8
Appendix 5.6-A12-1	WF95G Girder Details 1 of 3	5.6-A12-1
Appendix 5.6-A12-2	WF95G Girder Details 2 of 3	5.6-A12-2
Appendix 5.6-A12-3	WF95G Eng Diaphragm on Girder Details	5.6-A12-3
Appendix 5.6-A12-4	WF95G Abutment Type Pier Diaphragm Details	5.6-A12-4
Appendix 5.6-A12-5	WF95G Fixed Flush-Face Diaphragm at Intermediate Pier Details	5.6-A12-5
Appendix 5.6-A12-6	WF95G Fixed Recessed-Face Diaphragm at Intermediate Pier Details	5.6-A12-6
Appendix 5.6-A12-7	WF95G Hinge Diaphragm at Intermediate Pier Details	5.6-A12-7
Appendix 5.6-A12-8	WF95G Intermediate Diaphragm Details	5.6-A12-8
Appendix 5.6-A13-1	Bulb Tee Girder Details 2 of 3	5.6-A13-1
Appendix 5.6-A13-2	Bulb Tee Girder Details 3 of 3	5.6-A13-2
Appendix 5.6-A13-3	Bulb Tee Girder Miscellaneous Bearing Details	5.6-A13-3
Appendix 5.6-A13-4	W32BTG Girder Details 1 of 3	5.6-A13-4
Appendix 5.6-A14-1	W38BTG Girder Details 1 of 3	5.6-A14-1
Appendix 5.6-A14-1	W38BTG Girder Details 1 of 3	5.6-A14-1
Appendix 5.6-A15-1	W62BTG Girder Details 1 of 3	5.6-A15-1
Appendix 5.6-A16-1	Tub Girder Miscellaneous Bearing Details	5.6-A16-1

Appendix 5.6-A16-2	Tub Girder Details 1 of 3	5.6-A16-2
Appendix 5.6-A16-3	Tub Girder Details 2 of 3	5.6-A16-3
Appendix 5.6-A16-4	Tub Girder Details 3 of 3	5.6-A16-4
Appendix 5.6-A16-5	Tub Girder End Diaphragm on Girder Details	5.6-A16-5
Appendix 5.6-A16-6	Tub Girder Raised Crossbeam Details	5.6-A16-6
Appendix 5.6-A17-1	Tub S-I-P Deck Panel Girder Details 1 of 4	5.6-A17-1
Appendix 5.6-A17-2	Tub S-I-P Deck Panel Girder – Details 2 of 4	5.6-A17-2
Appendix 5.6-A17-3	Tub S-I-P Deck Panel Girder – Details 3 of 4	5.6-A17-3
Appendix 5.6-A17-4	Tub S-I-P Deck Panel Girder – Details 4 of 4	5.6-A17-4
Appendix 5.6-A17-5	Tub S-I-P Deck Panel Girder – End Diaphragm on Girder Details	5.6-A17-5
Appendix 5.6-A17-6	Tub S-I-P Deck Panel Girder – Raised Crossbeam Details	5.6-A17-6
Appendix 5.6-A17-7	Tub S-I-P Deck Panel Girder Miscellaneous Bearing Details	5.6-A17-7
Appendix 5.6-A18-1	Precast Prestressed Stay-in-Place Deck Panel Details	5.6-A18-1
Appendix 5.6-A19-1	1’-0” Solid Slab Details 1 of 2	5.6-A19-1
Appendix 5.6-A19-2	1’-0” Solid Slab Details 2 of 2	5.6-A19-2
Appendix 5.6-A20-1	1’-6” Voided Details 1 of 2	5.6-A20-1
Appendix 5.6-A20-2	1’-6” Voided Details 2 of 2	5.6-A20-2
Appendix 5.6-A21-1	2’-2” Voided Slab Details 1 of 2	5.6-A21-1
Appendix 5.6-A21-2	2’-2” Voided Slab Details 2 of 2	5.6-A21-2
Appendix 5.6-A21-3	Voided Slab End Pier	5.6-A21-3
Appendix 5.6-A21-4	Hinge Diaphragm at Intermediate Pier Details	5.6-A21-4
Appendix 5.6-A22-1	Precast Prestressed Ribbed Girder Details 1 of 2	5.6-A22-1
Appendix 5.6-A22-2	Precast Prestressed Ribbed Girder Details 2 of 2	5.6-A22-2
Appendix 5.6-A22-3	Precast Prestressed Ribbed Girder Pier Details	5.6-A22-3
Appendix 5.6-A23-1	Precast Prestressed Double T Details 1 of 2	5.6-A23-1
Appendix 5.6-A23-2	Precast Prestressed Double T Details 2 of 2	5.6-A23-2
Appendix 5.6-A24-1	W35DG Deck Bulb Tee Girder Details 1 of 2	5.6-A24-1
Appendix 5.6-A24-2	W35DG Deck Bulb Tee Girder Details 2 of 2	5.6-A24-2
Appendix 5.6-A24-3	W35DG Deck Bulb Tee Diaphragm Details	5.6-A24-3
Appendix 5.6-A25-1	W41DG Bulb Tee Girder Details 1 of 2	5.6-A25-1
Appendix 5.6-A25-2	W41DG Bulb Tee Girder Details 2 of 2	5.6-A25-2
Appendix 5.6-A25-3	W41DG Deck Bulb Tee Girder Diaphragm Details	5.6-A25-3
Appendix 5.6-A26-1	W53DG Bulb Tee Girder Details 1 of 2	5.6-A26-1
Appendix 5.6-A26-2	W53DG Bulb Tee Girder Details 2 of 2	5.6-A26-2
Appendix 5.6-A26-3	W53DG Deck Bulb Tee Diaphragm Details	5.6-A26-3
Appendix 5.6-A27-1	W65DG Deck Bulb Tee Girder Details 1 of 2	5.6-A27-1
Appendix 5.6-A27-2	W65DG Deck Bulb Tee Girder Details 2 of 2	5.6-A27-2
Appendix 5.6-A27-3	W65DG Deck Bulb Tee Girder Diaphragm Details	5.6-A27-3
Appendix 5.6-A27-4	Deck Bulb Tee Girder Diaphragm Details	5.6-A27-4
Appendix 5.9-A1-1	WF74PTG Spliced Girders Details 1 of 5	5.9-A1-1
Appendix 5.9-A1-2	WF74PTG Spliced Girder Details 2 of 5	5.9-A1-2
Appendix 5.9-A1-3	Spliced Girder Details 3 of 5	5.9-A1-3
Appendix 5.9-A1-4	WF74PTG Girder Details 4 of 5	5.9-A1-4
Appendix 5.9-A1-5	Spliced Girder Details 5 of 5	5.9-A1-5
Appendix 5.9-A2-1	WF83PTG Spliced Girder Details 1 of 5	5.9-A2-1
Appendix 5.9-A2-2	WF83PTG Spliced Girder Details 2 of 5	5.9-A2-2
Appendix 5.9-A2-4	WF83PTG Spliced Girder Details 4 of 5	5.9-A2-3
Appendix 5.9-A3-1	WF95PTG Spliced Girder Details 1 of 5	5.9-A3-1
Appendix 5.9-A3-2	WF95PTG Spliced Girder Details 2 of 5	5.9-A3-2
Appendix 5.9-A3-4	WF95PTG Spliced Girder Details 4 of 5	5.9-A3-3
Appendix 5.9-A4-1	Tub Spliced Girder Miscellaneous Bearing Details	5.9-A4-1
Appendix 5.9-A4-2	Tub Spliced Girder Details 1 of 5	5.9-A4-2
Appendix 5.9-A4-3	Tub Spliced Girder Details 2 of 5	5.9-A4-3

Appendix 5.9-A4-4	Tub Spliced Girder Details 3 of 5	5.9-A4-4
Appendix 5.9-A4-5	Tub Spliced Girder Details 4 of 5	5.9-A4-5
Appendix 5.9-A4-6	Spliced Tub Girder Details 5 of 5	5.9-A4-6
Appendix 5.9-A4-7	Tub Sliced Girder End Diaphragm on Girder Details	5.9-A4-7
Appendix 5.9-A4-8	Tub Sliced Girder Raised Crossbeam Details	5.9-A4-8
Appendix 5.9-A5-1	Tub S-I-P Deck Panel Spliced Girder Details 1 of 5	5.9-A5-1
Appendix 5.9-A5-2	Tub S-I-P Deck Panel Spliced Girder – Details 2 of 5	5.9-A5-2
Appendix 5.9-A5-3	Tub S-I-P Deck Panel Spliced Girder – Details 3 of 5	5.9-A5-3
Appendix 5.9-A5-4	Tub S-I-P Deck Panel Spliced Girder – Details 4 of 5	5.9-A5-4
Appendix 5.9-A5-5	Tub S-I-P Deck Panel Spliced Girder – Details 5 of 5	5.9-A5-5
Appendix 5.9-A5-6	Tub S-I-P Deck Panel Girder – End Diaphragm on Girder Details	5.9-A5-6
Appendix 5.9-A5-7	Tub S-I-P Deck Panel Girder – Raised Crossbeam Details	5.9-A5-7

Appendix B

Appendix 5-B1	“A” Dimension for Precast Girder Bridges	5-B1-1
Appendix 5-B2	Pre-approved Post-Tensioning Anchorages	5-B2-1
Appendix 5-B3	Existing Bridge Widenings	5-B3-1
Appendix 5-B4	P.T. Box Girder Bridges Single Span	5-B4-1
Appendix 5-B5	Prestressed Girder Design Example	5-B5-1
Appendix 5-B6	Cast-in-Place Slab Design Example	5-B6-1
Appendix 5-B7	Precast Concrete Stay-In-Place (SIP) Deck Panel	5-B7-1
Appendix 5-B8	W35DG Deck Bulb Tee, 48" Wide	5-B8-1
Appendix 5-B9	Prestressed Voided Slab with Cast-in-Place Topping	5-B9-1
Appendix 5-B10	Positive EQ Reinforcement at Interior Pier of a Prestressed Girder	5-B10-1
Appendix 5-B11	LRFD Wingwall Design-Vehicle Collision	5-B11-1
Appendix 5-B12	Flexural Strength Calculations for Composite T-Beams	5-B12-1
Appendix 5-B13	Strut-and-Tie Model Design Example for Hammerhead Pier	5-B13-1
Appendix 5-B14	Shear and Torsion Capacity of a Reinforced Concrete Beam	5-B14-1
Appendix 5-B15	Sound Wall Design - Type D-2k	5-B15-1

Chapter 6 Structural Steel

6.0	**Structural Steel**		6.0-1
	6.0.1	Introduction	6.0-1
6.1	**Design Considerations**		6.1-1
	6.1.1	Codes, Specification, and Standards	6.1-1
	6.1.2	Preferred Practice	6.1-1
	6.1.3	Preliminary Girder Proportioning	6.1-2
	6.1.4	Estimating Structural Steel Weights	6.1-2
	6.1.5	Bridge Steels	6.1-4
	6.1.6	Available Plate Sizes	6.1-5
	6.1.7	Girder Segment Sizes	6.1-5
	6.1.8	Computer Programs	6.1-6
	6.1.9	Fasteners	6.1-6
6.2	**Girder Bridges**		6.2-1
	6.2.1	General	6.2-1
	6.2.2	I-Girders	6.2-1
	6.2.3	Tub or Box Girders	6.2-2
	6.2.4	Fracture Critical Superstructures	6.2-3
6.3	**Design of I-Girders**		6.3-1
	6.3.1	Limit States for LRFD	6.3-1
	6.3.2	Composite Section	6.3-1
	6.3.3	Flanges	6.3-1
	6.3.4	Webs	6.3-2
	6.3.5	Transverse Stiffeners	6.3-2
	6.3.6	Longitudinal Stiffeners	6.3-2
	6.3.7	Bearing Stiffeners	6.3-2
	6.3.8	Crossframes	6.3-3
	6.3.9	Bottom Laterals	6.3-4
	6.3.10	Bolted Field Splice for Girders	6.3-4
	6.3.11	Camber	6.3-5
	6.3.12	Roadway Slab Placement Sequence	6.3-6
	6.3.13	Bridge Bearings for Steel Girders	6.3-7
	6.3.14	Surface Roughness and Hardness	6.3-7
	6.3.15	Welding	6.3-8
	6.3.16	Shop Assembly	6.3-10

6.4 Plan Details 6.4-1
6.4.1 General 6.4-1
6.4.2 Structural Steel Notes 6.4-1
6.4.3 Framing Plan 6.4-1
6.4.4 Girder Elevation 6.4-1
6.4.5 Typical Girder Details 6.4-2
6.4.6 Crossframe Details 6.4-2
6.4.7 Camber Diagram and Bearing Stiffener Rotation 6.4-2
6.4.8 Roadway Slab 6.4-3
6.4.9 Handrail Details and Inspection Access 6.4-3
6.4.10 Box Girder Details 6.4-3

6.5 Shop Plan Review 6.5-1

6.99 References 6.99-1

Appendix A
6.4-A1 Framing Plan 6.4-A1
6.4-A2 Girder Elevation 6.4-A2
6.4-A3 Girder Details 6.4-A3
6.4-A4 Steel Plate Girder Field Splice 6.4-A4
6.4-A5 Steel Plate Girder Crossframes 6.4-A5
6.4-A6 Steel Plate Girder Camber Diagram 6.4-A6
6.4-A7 Steel Plate Girder Roadway Section 6.4-A7
6.4-A8 Steel Plate Girder Slab Plan 6.4-A8
6.4-A9 Handrail 6.4-A9
6.4-A10 Box Girder Geometrics and Proportions 6.4-A10
6.4-A11 Example Box Girder Details 6.4-A11
6.4-A12 Example Box Girder Pier Diaphragm Details 6.4-A12
6.4-A13 Example Box Girder Miscellaneous Details 6.4-A13

Chapter 7 Substructure Design

7.1 General Substructure Considerations 7.1-1
7.1.1 Foundation Design Process 7.1-1
7.1.2 Foundation Design Limit States 7.1-4
7.1.3 Seismic Design 7.1-4
7.1.4 Substructure and Foundation Loads 7.1-4
7.1.5 Concrete Class for Substructure 7.1-5
7.1.6 Foundation Seals 7.1-5

7.2 Foundation Modeling 7.2-1
7.2.1 General 7.2-1
7.2.2 Substructure Linear Dynamic Analysis Procedure 7.2-1
7.2.3 Bridge Model Section Properties 7.2-2
7.2.4 Bridge Model Verification 7.2-3
7.2.5 Deep Foundation Modeling Methods 7.2-4
7.2.6 Lateral Analysis of Piles and Shafts 7.2-8
7.2.7 Spread Footing Modeling 7.2-9

7.3 Column Design 7.3-1
7.3.1 Preliminary Plan Stage 7.3-1
7.3.2 General Column Criteria 7.3-1
7.3.3 Column Design Flow Chart – Non-Seismic Design 7.3-2
7.3.4 Slenderness Effects 7.3-4
7.3.5 Moment Magnification Method 7.3-4
7.3.6 Second-Order Analysis 7.3-5
7.3.7 Shear Design 7.3-6

7.4 Column Reinforcement 7.4-1
7.4.1 Reinforcing Bar Material 7.4-1
7.4.2 Longitudinal Reinforcement Ratio 7.4-1
7.4.3 Longitudinal Splices 7.4-1
7.4.4 Longitudinal Development 7.4-3
7.4.5 Transverse Reinforcement 7.4-5
7.4.6 Hinge Diaphragms 7.4-8
7.4.7 Column Hinges 7.4-9

7.5 Abutment Design and Details 7.5-1
7.5.1 Abutment Types 7.5-1
7.5.2 Embankment at Abutments 7.5-3
7.5.3 Abutment Loading 7.5-3
7.5.4 WSDOT Temporary Construction Load Cases 7.5-5
7.5.5 Abutment Bearings and Girder Stops 7.5-5
7.5.6 Abutment Expansion Joints 7.5-7
7.5.7 Open Joint Details 7.5-7
7.5.8 Construction Joints 7.5-9
7.5.9 Abutment Wall Design 7.5-9
7.5.10 Drainage and Backfilling 7.5-11

7.6	**Wing/Curtain Wall at Abutments**		7.6-1
	7.6.1	Traffic Barrier Loads	7.6-1
	7.6.2	Wingwall Design	7.6-1
	7.6.3	Wingwall Detailing	7.6-1
7.7	**Footing Design**		7.7-1
	7.7.1	General Footing Criteria	7.7-1
	7.7.2	Loads and Load Factors	7.7-2
	7.7.3	Geotechnical Report Summary	7.7-3
	7.7.4	Spread Footing Structural Design	7.7-4
	7.7.5	Footing Concrete Design on Pile Supports	7.7-10
7.8	**Drilled Shafts**		7.8-1
	7.8.1	Axial Resistance	7.8-1
	7.8.2	Structural Design and Detailing	7.8-2
7.9	**Piles and Piling**		7.9-1
	7.9.1	Pile Types	7.9-1
	7.9.2	Single Pile Axial Resistance	7.9-2
	7.9.3	Block Failure	7.9-3
	7.9.4	Pile Uplift	7.9-3
	7.9.5	Pile Spacing	7.9-3
	7.9.6	Structural Design and Detailing of CIP Concrete Piles	7.9-3
	7.9.7	Pile Splices	7.9-4
	7.9.8	Pile Lateral Design	7.9-4
	7.9.9	Battered Piles	7.9-5
	7.9.10	Pile Tip Elevations and Quantities	7.9-5
	7.9.11	Plan Pile Resistance	7.9-5

Appendix B

Appendix 7-B-1	Linear Spring Calculation Method II (Technique I)	7-B-1-1

Chapter 8 Walls & Buried Structures

8.1 Retaining Walls 8.1-1
- 8.1.1 General 8.1-1
- 8.1.2 Common Types of Walls 8.1-1
- 8.1.3 Design 8.1-5
- 8.1.4 Miscellaneous Items 8.1-10

8.2 Miscellaneous Underground Structures 8.2-1
- 8.2.1 General 8.2-1
- 8.2.2 Design 8.2-1
- 8.2.3 References 8.2-4

Appendix A

Appendix 8.1-A Pre-approved Proprietary Wall Systems 8.1-A1-1
Appendix 8.1-A2-1 Sew Wall Elevation 8.1-A2-1
Appendix 8.1-A2-2 Sew Wall Elevation 8.1-A2-2
Appendix 8.1-A3-1 Soldier Pile/Tieback Wall Elevation 8.1-A3-1
Appendix 8.1-A3-2 Soldier Pile/Tieback Wall Details 1 of 2 8.1-A3-2
Appendix 8.1-A3-3 Soldier Pile/Tieback Wall Details 2 of 2 8.1-A3-3
Appendix 8.1-A3-4 Soldier Pile/Tieback Wall Fascia Panel Details 8.1-A3-4
Appendix 8.1-A3-5 Soldier Pile/Tieback Wall Detail Permanent Ground Anchor Details 8.1-A3-5
Appendix 8.1-A3-6 Soldier Pile/Tieback Wall Permanent Ground Anchor Details 8.1-A3-6
Appendix 8.1-A4-1 Soil Nail Layout 8.1-A4-1
Appendix 8.1-A4-2 Soil Nail Wall Section 8.1-A4-2
Appendix 8.1-A4-3 Soil Nail Wall Fascia Panel Details 8.1-A4-3
Appendix 8.1-A4-4 Soldier Pile/Tieback Wall Fascia Panel Details 8.1-A4-4
Appendix 8.1-A5-1 Noise Barrier on Bridge 8.1-A5-1
Appendix 8.1-A5-2 Cable Fence – Top Mount 8.1-A5-2
Appendix 8.1-A6-1 Cable Fence 8.1-A6-1
Appendix 8.1-A6-2 Cable Fence – Top Mount 8.1-A6-2

Chapter 9 Bearings & Expansion Joints

9.1 Expansion Joints 9.1-1
- 9.1.1 General Considerations 9.1-1
- 9.1.2 General Design Criteria 9.1-2
- 9.1.3 Small Movement Range Joints 9.1-3
- 9.1.4 Medium Movement Range Joints 9.1-9
- 9.1.5 Large Movement Range Joints 9.1-12

9.2 Bearings 9.2-1
- 9.2.1 General Considerations 9.2-1
- 9.2.2 Force Considerations 9.2-1
- 9.2.3 Movement Considerations 9.2-1
- 9.2.4 Detailing Considerations 9.2-2
- 9.2.5 Bearing Types 9.2-2
- 9.2.6 Miscellaneous Details 9.2-8
- 9.2.7 Contract Drawing Representation 9.2-9
- 9.2.8 Shop Drawing Review 9.2-9
- 9.2.9 Bearing Replacement Considerations 9.2-9

Appendix A

Appendix 9.1-A1-1 Expansion Joint Details Compression Seal 9.1-A1-1
Appendix 9.1-A2-1 Expansion Joint Details Strip Seal 9.1-A2-1
Appendix 9.1-A3-1 Silicone Seal Expansion Joint Details 9.1-A3-1

Chapter 10 Signs, Barriers, Approach Slabs, & Utilities

10.1	**Sign and Luminaire Supports**		10.1-1
	10.1.1	Loads	10.1-1
	10.1.2	Bridge Mounted Signs	10.1-3
	10.1.3	Sign Bridges Mounted on Bridges	10.1-7
	10.1.4	Monotube Sign Structures	10.1-7
	10.1.5	Foundations	10.1-10
	10.1.6	Truss Sign Bridges: Foundation Sheet Design Guidelines	10.1-11
10.2	**Bridge Traffic Barriers**		10.2-1
	10.2.1	General Guidelines	10.2-1
	10.2.2	Bridge Railing Test Levels	10.2-1
	10.2.3	Available WSDOT Designs	10.2-2
	10.2.4	Design Criteria	10.2-5
10.3	**At Grade Traffic Barriers**		10.3-1
	10.3.1	Median Barriers	10.3-1
	10.3.2	Shoulder Barriers	10.3-2
	10.3.3	Traffic Barrier Moment Slab	10.3-2
	10.3.4	Precast Traffic Barrier	10.3-3
10.4	**Bridge Traffic Barrier Rehabilitation**		10.4-1
	10.4.1	Policy	10.4-1
	10.4.2	Guidelines	10.4-1
	10.4.3	Design Criteria	10.4-1
	10.4.4	WSDOT Bridge Inventory of Bridge Rails	10.4-2
	10.4.5	Available Retrofit Designs	10.4-2
	10.4.6	Available Replacement Designs	10.4-2
10.5	**Bridge Railing**		10.5-1
	10.5.1	Design	10.5-1
	10.5.2	Railing Types	10.5-1
10.6	**Bridge Approach Slabs**		10.6-1
	10.6.1	Notes to Region for Preliminary Plan	10.6-1
	10.6.2	Approach Slab Design and Detailing	10.6-2
	10.6.3	Approach Expansion Joints	10.6-2
	10.6.4	Skewed Approach Slabs	10.6-3
	10.6.5	Bridge Approach Approach Detailing	10.6-4
	10.6.6	Pavement Seats on Existing Bridges	10.6-4

10.7 Traffic Barrier on Approach Slabs 10.7-1
10.7.1 Approach Slab over Wing Walls, Cantilever Walls or Geosynthetic Walls 10.7-2
10.7.2 Approach Slab over SE Walls 10.7-3

10.8 Utilities Installed with New Construction 10.8-1
10.8.1 General Concepts 10.8-1
10.8.2 Utility Design Criteria 10.8-2
10.8.3 Box Girder Bridges 10.8-3
10.8.4 Traffic Barrier Conduit 10.8-4
10.8.5 Conduit Types 10.8-5
10.8.6 Utility Supports 10.8-5

10.9 Utility Review Procedure for Installation on Existing Bridges 10.9-1
10.9.1 Utility Review Checklist 10.9-1

10.10 Drainage Design 10.10-1

Appendix A
Appendix 10.1-A1-1 Montube Sign Structures Sign Bridge Layout 10.1-A1-1
Appendix 10.1-A1-2 Montube Sign Structures Structural Cantilever Layout 10.1-A1-2
Appendix 10.1-A2-1 Montube Sign Structures Structural Details 1 10.1-A2-1
Appendix 10.1-A2-2 Montube Sign Structures Structural Details 2 10.1-A2-2
Appendix 10.1-A3-1 Montube Sign Structures Foundation Type 1 10.1-A3-1
Appendix 10.1-A3-2 Montube Sign Structures Foundation Types 2 and 3 10.1-A3-2
Appendix 10.1-A4-1 Montube Sign Structure F-Shaped Traffic Barrier Foundation 10.1-A4-1
Appendix 10.1-A4-2 Montube Sign Structure Single Slope Traffic Barrier Foundation 10.1-A4-2
Appendix 10.1-A5-1 Truss Sign Structures F-Shaped Traffic Barrier Foundation 10.1-A5-1
Appendix 10.1-A5-2 Truss Sign Structures Single Slope Barrier Foundation 10.1-A5-2

Chapter 11 Detailing Practice

11.1 Detailing Practice 11.1-1
11.1.1 Standard Office Practices 11.1-1
11.1.2 Bridge Office Standard Drawings and Office Examples 11.1-7
11.1.3 Plan Sheets 11.1-7
11.1.4 Structural Steel 11.1-9
11.1.5 Aluminum Section Designations 11.1-11
11.1.6 Abbreviations 11.1-12

Appendix A
Appendix 11.1-A1 11.1-A1-1
Appendix 11.1-A2 11.1-A2-1
Appendix 11.1-A3 11.1-A3-1
Appendix 11.1-A4-1 Footing Layout 11.1-A4-1

Chapter 12 Quantities, Costs, & Specifications

12.1 Quantities - General 12.1-1
12.1.1 Cost Estimating Quantities 12.1-1
12.1.2 Not Included in Bridge Quantities List 12.1-1

12.2 Computation of Quantities 12.2-1
12.2.1 Responsibilities 12.2-1
12.2.2 Procedure for Computation 12.2-1
12.2.3 Data Source 12.2-2
12.2.4 Accuracy 12.2-2
12.2.5 Excavation 12.2-2
12.2.6 Shoring or Extra Excavation, Class A 12.2-6
12.2.7 Piling 12.2-8
12.2.8 Conduit Pipe 12.2-8
12.2.9 Private Utilities Attached To Bridge Structures 12.2-9
12.2.10 Drilled Shafts 12.2-9

12.3 Construction Costs 12.3-1
12.3.1 Introduction 12.3-1
12.3.2 Factors Affecting Costs 12.3-1
12.3.3 Development of Cost Estimates 12.3-2

12.4 Construction Specifications and Estimates 12.4-1
12.4.1 General 12.4-1
12.4.2 Definitions 12.4-1
12.4.3 General Bridge S&E Process 12.4-1
12.4.4 Reviewing Bridge Plans 12.4-3
12.4.5 Preparing the Bridge Cost Estimates 12.4-4
12.4.6 Preparing the Bridge Specifications 12.4-4
12.4.7 Preparing the Bridge Working Day Schedule 12.4-5
12.4.8 Reviewing Projects Prepared by Consultants 12.4-6
12.4.9 Submitting the PS&E Package 12.4-6
12.4.10 PS&E Review Period and Turn-in for AD Copy 12.4-7

Appendix A

Appendix 12.1-A1 Not Included In Bridge Quantities List 12.1-A1-1
Appendix 12.2-A1 Bridge Quantities 12.2-A1-1
Appendix 12.3-A1 Bridge and Structures Structural Estimating Aids Construction Costs 12.3-A1-1
Appendix 12.3-A2 Bridge and Structures Structural Estimating Aids Construction Costs 12.3-A2-1
Appendix 12.3-A3 Bridge and Structures Structural Estimating Aids Construction Costs 12.3-A3-1
Appendix 12.3-A4 Bridge and Structures Structural Estimating Aids Construction Costs 12.3-A4-1
Appendix 12.4-A1 Special Provisions Checklist 12.4-A1-1
Appendix 12.4-A2 Bridge and Structures Structural Estimating Aids Construction Time Rates 12.4-A2-1

Appendix B
Appendix 12.3-B1 Cost Estimate Summary 12.3-B1-1
Appendix 12.4-B1 Construction Working Day Schedule 12.4-B1-1

Chapter 13 Bridge Load Rating

13.1 General 13.1-1
13.1.1 WSDOT Rating (LRFR) 13.1-2
13.1.2 NBI Rating (LFR) 13.1-8

13.2 Special Rating Criteria 13.2-1
13.2.1 Dead Loads 13.2-1
13.2.2 Live Load Distribution Factors 13.2-1
13.2.3 Reinforced Concrete Structures 13.2-1
13.2.4 Concrete Decks 13.2-1
13.2.5 Concrete Crossbeams 13.2-1
13.2.6 In-Span Hinges 13.2-2
13.2.7 Concrete Box Girder Structures 13.2-2
13.2.8 Prestressed Concrete Girder Structures 13.2-2
13.2.9 Concrete Slab Structures 13.2-2
13.2.10 Steel Structures 13.2-2
13.2.11 Steel Floor Systems 13.2-2
13.2.12 Steel Truss Structures 13.2-2
13.2.13 Timber Structures 13.2-3
13.2.14 Widened or Rehabilitated Structures 13.2-3
13.2.15 13.2-3

13.3 Load Rating Software 13.3-1

13.4 Load Rating Reports 13.3-3

13.5 Bibliography 13.5-1

Appendix A
Appendix 13.4-A1 Bridge Rating Summary 13.4-A1-1

Chapter 1 General Information Contents

1.1	**Manual Description**		1.1-1
	1.1.1	Purpose	1.1-1
	1.1.2	Specifications	1.1-1
	1.1.3	Format	1.1-1
	1.1.4	Revisions	1.1-3
1.2	**Bridge and Structures Office Organization**		1.2-1
	1.2.1	General	1.2-1
	1.2.2	Organizational Elements of the Bridge Office	1.2-1
	1.2.3	Design Unit Responsibilities and Expertise	1.2-5
1.3	**Quality Control/Quality Assurance (QC/QA) Procedure**		1.3-1
	1.3.1	General	1.3-1
	1.3.2	Design/Check Procedures	1.3-2
	1.3.3	Design/Check Calculation File	1.3-10
	1.3.4	PS&E Review Period	1.3-11
	1.3.5	Addenda	1.3-11
	1.3.6	Shop Plans and Permanent Structure Construction Procedures	1.3-12
	1.3.7	Contract Plan Changes (Change Orders and As-Builts)	1.3-14
	1.3.8	Archiving Design Calculations, Design Files, and S&E Files	1.3-16
	1.3.9	Public Disclosure Policy Regarding Bridge Plans	1.3-17
	1.3.10	Use of Computer Software	1.3-17
1.4	**Coordination With Other Divisions and Agencies**		1.4-1
	1.4.1	Preliminary Planning Phase	1.4-1
	1.4.2	Final Design Phase	1.4-1
1.5	**Bridge Design Scheduling**		1.5-1
	1.5.1	General	1.5-1
	1.5.2	Preliminary Design Schedule	1.5-1
	1.5.3	Final Design Schedule	1.5-1
1.6	**Guidelines for Bridge Site Visits**		1.6-1
	1.6.1	Bridge Rehabilitation Projects	1.6-1
	1.6.2	Bridge Widening and Seismic Retrofits	1.6-1
	1.6.3	Rail and Minor Expansion Joint Retrofits	1.6-1
	1.6.4	New Bridges	1.6-1
	1.6.5	Bridge Demolition	1.6-2
	1.6.6	Proximity of Railroads Adjacent to the Bridge Site	1.6-2
1.99	**Bibliography**		1.99-1

Appendix A

Appendix 1.5-A1	Breakdown of Project Manhours Required Form	1.5-A1-1
Appendix 1.5-A2	Monthly Project Progress Report Form	1.5-A2-1
Appendix 1.5-A3	QA/QC Signature Sheet	1.5-A3-1

Chapter 1 General Information

1.1 Manual Description

1.1.1 Purpose

The Bridge Design Manual (BDM) is a guide for those who design bridges for the Washington State Department of Transportation (WSDOT). The BDM supplements the AASHTO LRFD Specifications. It explains differences where it deviates from the AASHTO LRFD Specifications. It contains standardized design details and methods, which are based on years of experience.

The BDM is a dynamic document, which constantly changes because of the creativity and innovative skills of our bridge designers and structural detailers. It is not intended for the design of unusual structures or to inhibit the designer in the exercise of engineering judgment. There is no substitute for experience, good judgment, and common sense.

1.1.2 Specifications

The AASHTO LRFD Bridge Design Specifications and the WSDOT Bridge Design Manual (BDM) are the basic documents used to design highway bridges and structures in Washington State.

The WSDOT BDM supplements the AASHTO Specifications by providing additional direction, design aides, examples, and information on office practice. The BDM takes precedence where conflict exists between the BDM and the AASHTO Specifications. The WSDOT Bridge Design Engineer will provide guidance where a conflict still exists.

The BDM does not duplicate the AASHTO Specifications. References are listed at the end of each chapter.

1.1.3 Format

A. General

The Bridge Design Manual consists of one volume with each chapter organized as follows:

Criteria or other information (printed on white paper)

Appendix A (printed on yellow paper) Design Aids

Appendix B (printed on salmon paper) Design Examples

B. Chapters

1. General Information
2. Preliminary Design
3. Loads
4. Seismic Design and Retrofit
5. Concrete Structures
6. Steel Design
7. Substructure
8. Walls and Buried Structures
9. Bearings and Expansion Joints

10. Traffic Barriers, Sign Structures, Approach Slabs, Utility Supports
11. Detailing Practice
12. Quantities, Construction Costs, and Specifications
13. Bridge Rating

C. Numbering System

1. The numbering system for the criteria consists of a set of numbers followed by letters as required to designate individual subjects. This format is similar to that used by AASHTO.

   Example:

   Chapter 5 Concrete Structures (Chapter)

   5.3 Reinforced Concrete Box Girder Bridges (Section)

   5.3.2 Reinforcement (Subsection)

   A. Top Slab Reinforcement

      1. Near Center of Span

         a. Transverse Reinforcement

2. Numbering of Sheets

   Each section starts a new page numbering sequence. The page numbers are located in the lower outside corners and begin with the chapter number, followed by the section number, then a sequential page number.

   Example: 5-1, 5-2, etc.

3. Appendices are included to provide the designer with design aids (Appendix A) and examples (Appendix B). Design aids are generally standard in nature, whereas examples are modified to meet specific job requirements.

   An appendix is numbered using the chapter followed by section number and then a hyphen and the letter of the appendix followed by consecutive numbers.

   Example: 5.3-A1 (Box Girder Bridges) designates a design aid required or useful to accomplish the work described in Chapter 5, Section 3.

4. Numbering of Tables and Figures

   Tables and figures shall be numbered using the chapter, section, subsection in which they are located, and then a hyphen followed by consecutive numbers.

   Example: Figure 5.3.2-1 is the first figure found in Chapter 5, section 3, subsection 2.

1.1.4 Revisions

A. Manual Updates

The Bridge Design Manual will change as new material is added and as criteria and specifications change.

Designers shall check any for BDM updates issued by the Bridge and Structures Office as Design Memorandums. These are posted on the following website: www.wsdot.wa.gov/eesc/bridge/bdm and are incorporated into the BDM as soon as possible.

Revisions and new material will be issued with a Publications Transmittal Form. The form will have a revision number and remarks or special instructions regarding the sheets. The revision number shall be entered on the Record of Revision sheet in this manual. This allows the user to verify that the manual is up to date.

B. Bridge Design Instruction

Special instructions regarding interpretation of criteria or other policy statements may be issued using a Bridge Design Instruction (BDI). The BDI will be transmitted in the same manner as outlined above for manual revisions. The BDI should be inserted in the appropriate place in the manual and remains in effect until the expiration date shown or until superseded by a revision to the manual.

C. Record of Manual Revisions

In order that a ready means be available to check whether a manual is up to date, each manual holder is requested to keep his copy up to date and to record Bridge Design Instructions or Revisions as material is added or changed. The form below is intended for use in keeping this record. At any time, a manual holder will be able to check his list with the list in the "master" manual.

Revision Number	Entry Date	By (Initial)	Revision Number	Entry Date	By (Initial)	Revision Number	Entry Date	By (Initial)

Record of Manual Revisions
Table 1.1.4-1

1.2 Bridge and Structures Office Organization

1.2.1 General

The responsibilities of the Bridge and Structures Office are:

Provides structural engineering services for WSDOT. Provides technical advice and assistance to other governmental agencies on such matters.

The WSDOT Design Manual states the following:

Bridge design is the responsibility of the Bridge and Structures Office in Olympia. Any design authorized at the Region level is subject to review and approval by the Bridge and Structures Office.

1.2.2 Organizational Elements of the Bridge Office

A. Bridge and Structures Engineer

The Bridge and Structures Engineer is responsible for structural engineering services for the department and manages staff and programs for structural design, contract plan preparation, inspections and assessments of existing bridges.

B. Bridge Design Engineer

The Bridge Design Engineer is directly responsible to the Bridge and Structures Engineer for structural design and review, and advises other divisions and agencies on such matters.

1. Structural Design Units

The Structural Design Units are responsible for the final design of bridges and other structures. Final design includes preparation of contract plans. The units provide special design studies, develop design criteria, check shop plans, and review designs submitted by consultants. Frequently, the Bridge Projects Engineer assigns the units the responsibility for preparing preliminary bridge plans and other unscheduled work.

The Bridge Engineer Supervisor (Unit Supervisor) provides day-to-day leadership, project workforce planning, mentoring, and supervision for the design unit. Organization and job assignments within the unit are flexible and depend on projects underway at any particular time as well as the qualifications and experience level of individuals. The primary objective of the design units is to produce contract plans for bridges and structures within scope, schedule and budget. This involves designing, checking, reviewing, and detailing in an efficient and timely manner.

A bridge specialist is assigned to each design unit. Each specialist has a particular area of expertise. The four major areas are: concrete, steel, seismic design & retrofit and expansion joints & bearings. The specialists act as a resource for the bridge office in their specialty and are responsible for keeping up-to-date on current AASHTO criteria, new design concepts and products, technical publications, construction and maintenance issues, and are the primary points of contact for industry representatives.

The design units are also responsible for the design and preparation of contract plans for modifications to bridges in service. These include bridge rail replacement, deck repair, seismic retrofits, emergency repairs when bridges are damaged by vehicle or ship collision or natural phenomenon, and expansion joint and drainage retrofits. They review proposed plans of utility attachments to existing bridges.

2. Bridge Projects Unit

   The Bridge Projects Engineer directs preliminary design work, specification and cost estimates preparation, falsework review, project scoping, coordinates scheduling of bridge design projects and unscheduled work assignments with the Region Project Development Engineers, Bridge Design Engineer, and the Unit Supervisors.

   The Preliminary Plan Engineers are responsible for bridge project planning from initial scoping to design type, size, and location (TSL) studies and reports. They are responsible for preliminary plan preparation of bridge and walls including assembly and analysis of site data, preliminary structural analysis, cost analysis, determination of structure type, and drawing preparation. They also check preliminary plans prepared by others, review highway project environmental documents and design reports, and prepare U. S. Coast Guard Permits.

   The Specifications and Estimate (S&E) Engineers develop and maintain construction specifications and cost estimates for bridge projects. They also develop specifications and cost estimates for bridge contracts prepared by consultants and other government agencies, which are administered by WSDOT. They assemble and review the completed bridge PS&E before submittal to the Regions. They also coordinate the PS&E preparation with the Regions and maintain bridge construction cost records.

   The Construction Support Unit Engineers are responsible for checking the contractor's falsework, shoring, and forming plans. Shop plan review and approval are coordinated with the design units. Actual check of the shop plans is done in the design unit. Field requests for plan changes come through this office for a recommendation as to approval.

   The Bridge Plans Engineer processes as-built plans in this unit. Region Project Engineers are responsible for preparing and submitting as-built plans at the completion of a contract.

   The Scheduling Engineer monitors the design work schedule for the Bridge and Structures Office, updates the Bridge Design Schedule (BDS) and maintains records of bridge contract costs. Other duties include coordinating progress reports to Regions by the Unit Supervisors and S&E Engineers through the Project Delivery Information System (PDIS).

   The Bridge Projects Unit dedicates one position to providing technical assistance for the design and detailing of expansion joint, bridge bearing and barrier/rail projects.

   In addition, the unit is responsible for updating the Bridge Design Manual. The unit coordinates changes to the WSDOT Standard Specifications and facilitates updates or revisions to WSDOT Bridge Office design standards.

3. Mega Project Bridge Manager

   The Mega Project Bridge Manager provides leadership, guidance and project management responsibilities for various complex, unique and monumental bridge design and construction projects. Mega Bridge Projects are defined as suspension, cable-stayed, movable, segmental or a complex group of interchange/corridor bridges and include conventional and design-build project delivery methods. The Mega Project Bridge Manager represents the Bridge and Structures Office in Cost Estimate Validation Process activities, Value Engineering Studies and Research Projects regarding major bridge projects.

C. Bridge Preservation Engineer

The Bridge Preservation Engineer directs activities and develops programs to assure the structural and functional integrity of all state bridges in service. The Bridge Preservation Engineer directs emergency response activities when bridges are damaged.

1. Bridge Preservation Office (BPO)

The Bridge Preservation Office is responsible for planning and implementing an inspection program for the more than 3,200 fixed and movable state highway bridges. In addition, BPO provides inspection services on some local agency bridges and on the state's ferry terminals. All inspections are conducted in accordance with the National Bridge Inspection Standards (NBIS).

BPO maintains the computerized Washington State Bridge Inventory System (WSBIS) of current information on more than 7,300 state, county, and city bridges in accordance with the NBIS. This includes load ratings for all bridges. BPO prepares a *Bridge List* of the state's bridges, which is published every two years, maintains the intranet-based Bridge Engineering Information System (BEIST), and prepares the annual Recommended Bridge Repair List (RBRL) based on the latest inspection reports.

BPO is responsible for the bridge load rating and risk reduction (SCOUR) programs. It provides damage assessments and emergency response services when bridges are damaged because of vehicle or ship collision or natural phenomenon such as: floods, wind, or earthquakes.

D. Bridge Management Engineer

The Bridge Management Unit is responsible for the program development, planning and monitoring of all statewide bridge program activities. These include P2 funded bridge replacements and rehabilitation, bridge deck protection, major bridge repair, and bridge painting.

In addition, the Bridge Management Unit manages the bridge deck protection, deck testing and the bridge research programs. It is responsible for the planning, development, coordination, and implementation of new programs (e.g., Seismic Retrofit and Preventative Maintenance), experimental feature projects, new product evaluation, and technology transfer.

The Bridge Management Engineer is the Bridge and Structures Office's official Public Disclosure contact. (See Section 1.3.9 Public Disclosure Policy Regarding Bridge Plans).

E. Computer Support Unit

The Computer Support Unit is responsible for computer resource planning and implementation, computer user support, liaison with Management Information Systems (MIS), computer aided engineer operation support, and software development activities. In addition, the unit works closely with the Bridge Projects Unit in updating the BDM and *Standard Plans*.

F. Consultant Liaison Engineer

The Consultant Liaison Engineer prepares bridge consultant agreements and coordinates consultant PS&E development activities with those of the Bridge Office. The Consultant Liaison Engineer negotiates bridge design contracts with consultants.

G. State Bridge and Structures Architect

The State Bridge and Structures Architect is responsible for reviewing and approving bridge preliminary plans, retaining walls, preparing renderings, model making, coordinating aesthetic activities with Regions (i.e. suggesting corridor themes and approving public art), and other duties to improve the aesthetics of our bridges and structures. The State Bridge and Structures Architect works closely with bridge office and region staff. During the design phase, designers should get the Architect's approval for any changes to architectural details shown on the approved preliminary plan.

H. Staff Support Unit

The Staff Support Unit is responsible for many support functions, such as: typing, timekeeping, payroll, receptionist, vehicle management, mail, inventory management, and other duties requested by the Bridge and Structures Engineer. Other duties include: filing field data, plans for bridges under contract or constructed, and design calculations. This unit also maintains office supplies and provides other services.

I. Office Administrator

The Office Administrator is responsible for coordinating personnel actions, updating the organizational chart, ordering technical materials, and other duties requested by the Bridge and Structures Engineer. Staff development and training are coordinated through the Office Administrator. The Office Administrator also handles logistical support, office and building maintenance issues.

1.2.3 Design Unit Responsibilities and Expertise

The following is an updated summary of the structural design, review and plan preparation responsibilities/expertise within the Bridge Design Section. Contact the Unit Supervisor for the name of the appropriate staff expert for the needed specialty.

Unit Supervisor	Responsibility/Expertise
Richard Stoddard	Bearings and Expansion Joints
	Seismic Retrofit
	Retaining Walls (including Structural Earth, Soldier Pile and Tie-Back, and Soil Nail)
	This design unit has primary responsibility for reviewing proposals submitted by retaining wall manufacturers for pre-approval of their wall systems. Once the wall system is preapproved with concurrence from the State Geotechnical Engineer, each design unit is responsible for checking the proprietary retaining wall shop drawings and designs that are submitted on contracts for which they have design responsibility. The Retaining Wall Specialist assigned to this unit handles the preapproval of proprietary retaining walls and is available as a resource for engineers that are performing design checks.
	When proprietary retaining wall shop plans/designs are submitted on unassigned contracts, the Construction Support Unit will assign the shop plan/design review to one of the three design units on a rotating basis.
Mark Anderson	Noise Barrier Walls
	Bridge Traffic Barriers
	Standard Plans for Prestressed Concrete
Ron Lewis	Coast Guard Permits
	Special Provisions and Cost Estimates
	Falsework, Forming and Temporary Structures
	Standard Plans (other than Prestressed Concrete)
	Bridge Design Manual
	Expansion joint, bearing and traffic barrier technical support.
Richard Zeldenrust	Sign Supports, Light Standards, Traffic Signal Supports
	Repairs to Damaged Bridges
Patrick Clarke	Floating Bridges
	Special Structures

1.3 Quality Control/Quality Assurance (QC/QA) Procedure

1.3.1 General

A. The purpose of the QC/QA procedure is to improve the quality of the structural designs and plans. The key element to the success of this process is effective communication between all parties. The goals of the QC/QA procedure are:

- Designed structures that improve public safety and meet state regulations.
- Designed structures which meet the requirements of the WSDOT Bridge Design Manual, AASHTO LRFD Bridge Design Specifications, current structural engineering practices, and geometric criteria provided by the Region.
- Designed structures that are aesthetically pleasing, constructible, durable, economical, inspectable, and require little maintenance.
- Design contract documents that meet the customer's needs, schedule, budget, and construction staging requirements.
- Structural design costs are minimized.
- An organized and indexed set of design calculations are produced. Design criteria and assumptions are included in the front after the index.
- Plan quality is maximized.
- The QA/QC procedure allows for change, innovation, and continuous improvement.

The goals are listed in order of importance. If there is a conflict between goals, the more important goal takes precedence.

The Unit Supervisor determines project assignments and the QC/QA process to be used in preparation of the structural design. The intent of the QC/QA process is to facilitate plan production efficiency and cost-effectiveness while assuring the structural integrity of the design and maximizing the quality of the structural contract documents.

B. The Bridge and Structures Office QC/QA procedure is a component of the general WSDOT template for project management process. Included as part of the current WSDOT project management process are project reviews at specific milestones along the project timeline. The expected content of the documents being reviewed at each specific milestone are described in the Deliverable Expectations Matrix developed and implemented by the WSDOT Design Office in May 2006. This matrix can be viewed via the link www.wsdot.wa.gov/projects/projectmgmt/online_guide/delivery_expectation_matrix/de_matrix.pdf.

The overall matrix is generic for WSDOT design, but there is a line in the matrix that outlines the specific content expectations for structures (bridges retaining walls, noise barrier walls, overhead sign structures, etc.). This "structures specific" matrix line includes a link to a separate matrix. This structures matrix can be viewed via the link www.wsdot.wa.gov/projects/projectmgmt/online_guide/delivery_expectation_matrix/bridge.pdf.

The Bridge Preliminary Plan as described in BDM Chapter 2 is equivalent to the Geometric Review milestone of the generic WSDOT matrix and the Permitting Submittal Review milestone of the structure specific matrix.

Intermediate stage constructability reviews conducted for certain projects by Region Design PE Offices or Local Agencies are equivalent to the General Plans Review milestone of the generic WSDOT matrix and the Intermediate PS&E Submittal Review milestone of the structure specific matrix.

The Bridge Plans turn-in as described in BDM Section 12.4.3 is equivalent to the Preliminary Contract Review milestone of the generic WSDOT matrix and the PS&E Pre-submittal Review milestone of the structure specific matrix.

The Bridge PS&E turn-in as described in BDM Section 12.4.3 is equivalent to the Final Contract Review milestone of the generic WSDOT matrix and the Final PS&E Submittal Review milestone of the structure specific matrix.

1.3.2 Design/Check Procedures

A. PS&E Prepared by WSDOT Bridge and Structures Office

1. Design Team

   The design team usually consists of the Designer(s), Checker(s), Structural Detailer(s), and a Specification and Estimate Engineer, who are responsible for preparing a set of contract documents on or before the scheduled due date(s) and within the budget allocated for the project. On large projects, the Unit Supervisor may designate a designer to be a Project Coordinator with additional duties, such as: assisting the supervisor in communicating with the Region, coordinating and communicating with the Geotechnical Branch, and monitoring the activities of the design team.

   The QC/QA procedures may vary depending on the type and complexity of the structure being designed, and the experience level of the design team members. More supervision, review, and checking may be required when the design team members are less experienced. In general, it is a good practice to have some experienced designers on every design team. All design team members should have the opportunity to provide input to maximize the quality of the design plans.

2. Designer Responsibility

   The designer is responsible for the content of the contract plan sheets, including structural analysis, completeness and correctness. A good set of example plans, which is representative of the bridge type, is indispensable as an aid to less experienced designers and detailers.

   During the design phase of a project, the designer will need to communicate frequently with the Unit Supervisor and other stakeholders. This includes acquiring, finalizing or revising roadway geometrics, soil reports, hydraulics recommendations, and utility requirements. Constructability issues may also require that the designer communicate with the Region or Construction Office. The designer may have to organize face-to-face meetings to resolve constructability issues early in the design phase. The bridge plans must be coordinated with the PS&E packages produced concurrently by the Region.

   The designer shall advise the Unit Supervisor as soon as possible of any scope and project cost increases and the reasons for the increases. The Unit Supervisor will then notify the Region project office if the delivery schedule will have to be changed. If Region concurs with a change in the delivery date, the Unit Supervisor will notify the Bridge Projects Engineer or the Bridge Scheduling Engineer of the revised delivery dates.

The designer or Project Coordinator is responsible for project planning which involves the following:

a. Determines scope of work, identifies tasksand plans order of work.

b. Prepare design criteria that are included in the front of the design calculations. Compares tasks with BDM office practice and AASHTO bridge design specifications.

   (1) Insures that design guidelines are sufficient?

   (2) Justification for deviation from BDM/AASHTO?

   (3) Justification for design approach?

   (4) Justification for deviation from office practices regarding design and details?

   (5) Other differences.

c. Meet with the Region design staff and other project stakeholders early in the design process to resolve as many issues as possible before proceeding with final design and detailing.

d. Identify coordination needs with other designers, units, and offices.

e. Early in the project, the bridge sheet numbering system should be coordinated with the Region design staff. For projects with multiple bridges, each set of bridge sheets should have a unique set of bridge sheet numbers.

f. At least monthly or as directed by the design Unit Supervisor:

   (1) Update Project Schedule and List of Sheets.

   (2) Estimate percent complete.

   (3) Estimate time to complete.

   (4) Work with Unit Supervisor to adjust resources, if necessary.

g. Develop preliminary quantities for all cost estimates after the Preliminary Plan stage.

h. Near end of project:

   (1) Develop quantities, *Not Included in Bridge Quantity List, and Special Provisions Checklist* that are to be turned in with the plans. (See 12.4.4).

   (2) Prepare the Bar List.

   (3) Coordinate all final changes, including review comments received from the Bridge Specifications and Estimates Engineer. Refer to BDM 12.4.3 (B).

   (4) Meet with Region design staff and other project stakeholders at the constructability review/ round table review meetings to address final project coordination issues.

   The designer should inform the Unit Supervisor of any areas of the design, which should receive special attention during checking and review.

   (5) Prepare the QA/QC Checklist, and obtain signatures/initials as required. This applies to all projects regardless of type or importance (bridges, walls, sign structures, overlay, traffic barrier, etc.). Refer to BDM page 1.5-A3-1.

The design calculations are prepared by the designer and become a very important record document. Design calculations will be a reference document during the construction of the structure and throughout the life of the structure. It is critical that the design calculations be user friendly. The design calculations shall be well organized, clear, properly referenced, and include numbered pages along with a table of contents. The design calculations shall be archived. Computer files should be archived for use during construction, in the event that changed conditions arise. Archive-ready design and check calculations shall be bound and submitted to the Unit Supervisor concurrently with the turn-in of the Bridge PS&E submittal. Calculations shall be stored in the design unit until completion of construction. After construction, they shall be sent to archives. (See Section 1.3.8 Archiving Design Calculations, Design Files, and S&E Files).

The designer or another assigned individual is also responsible for resolving construction problems referred to the Bridge Office during the life of the contract. These issues will generally be referred through the Bridge Technical Advisor, the Unit Supervisor, the Construction Support Unit, or the HQ Construction-Bridge.

3. Checker Responsibility

The checker is responsible to the Unit Supervisor for "quality assurance" of the structural design, which includes checking the design, plans and specifications to assure accuracy and constructability. The Unit Supervisor works with the checker to establish the level of checking required. The checking procedure for assuring the quality of the design will vary from project to project. Following are some general checking guidelines:

a. Design Calculations may be checked by either of two methods:

(1) Design calculations may be checked with a line-by-line review and initialing by the checker. If it is more efficient, the checker may choose to perform his/her own independent calculations.

(2) Iterative design methods may be best checked by review of the designer's calculations, while standard and straight-forward designs may be most efficiently checked with independent calculations. All the designer and checker calculations shall be placed in one design set

(3) Revision of design calculations, if required, is the responsibility of the designer.

b. Structural Plans

(1) The checker's plan review comments are recorded on a copy of the structural plans, including details and bar lists, and returned to the designer for consideration. These check prints are a vital part of the checking process, and shall be preserved. If the checker's comments are not incorporated, the designer should provide justification for not doing so. If there is a difference of opinion that cannot be resolved between the designer and checker, the Unit Supervisor shall resolve any issues. Check prints shall be submitted to the Unit Supervisor at the time of 100% PS&E turn-in.

(2) If assigned by the Unit Supervisor, a structural detailer shall perform a complete check of the geometry using CADD or hand calculations.

(3) Revision of plans, if required, is the responsibility of the designer.

c. Quantities and Barlist

(1) The checker shall provide an independent set of quantity calculations. These together with the designer's quantity calculations shall be placed in the job file.

(2) Resolution of differences between the designer and checker shall be completed before the Bridge PS&E submittal. The checker shall also check the barlist.

4. Structural Detailer Responsibility

The structural detailer is responsible for the quality and consistency of the contract plan sheets. The structural detailer shall ensure that the Bridge Office drafting standards as explained in BDM Chapter 11 are upheld.

a. Refer to BDM, Chapter 11, for detailing practices.

b. Provide necessary and adequate information to ensure the contract plans are accurate, complete, and readable.

c. Detail plan sheets in a consistent manner and follow accepted detailing practices.

d. Check plans for geometry, reinforcing steel congestion, consistency, and verify control dimensions.

e. Check for proper grammar and spelling.

f. On multiple bridge contracts, work with the Designer/Project Coordinator to ensure that the structural detailing of all bridges within the contract shall be coordinated to maximize consistency of detailing from bridge to bridge. Extra effort will be required to ensure uniformity of details, particularly if multiple design units and/or consultants are involved in preparing bridge plans.

g. Maintain an ongoing understanding of bridge construction techniques and practices.

5. Specialist Responsibility

There are currently four specialist positions in the Bridge and Structures Office. The four specialty areas in the Design Section are bearings and expansion joints, concrete (including prestressed concrete), seismic retrofit and design, and structural steel.

The primary responsibility of the specialist is to act as a knowledge resource for the Bridge and Structures Office. The Specialists maintain an active knowledge of their specialty area along with a current file of products and design procedures. The Specialists maintain industry contacts. Specialists also provide training in their area of specialty.

Specialists are expected to remain engaged with the design efforts being carried out in the office related to their specialty. At the discretion of the Design Unit Supervisor, the Specialists may be requested to review, comment on and initial plans in their area of expertise prepared by other designers.

Specialists also assist the Bridge and Structures Engineer in reviewing and voting on amendments to AASHTO specifications. In addition they are responsible for keeping their respective chapters of the Bridge Design Manual up to date.

A secondary responsibility of the Specialist is to serve as Unit Supervisor when the supervisor is absent.

6. Specification and Estimating Engineer Responsibilities

   The S&E Engineer is responsible for compiling the PS&E package for bridge and/or related highway structural components. This PS&E package includes Special Provisions (Bridge Special Provisions or BSPs and General Special Provisions or GSPs as appropriate), construction cost estimate, construction working day schedule, test hole boring logs and other appendices as appropriate, and the design plan package. The S&E Engineer is also responsible for soliciting, receiving, compiling and turning over to the designer all review comments received after the Bridge Plans turn-in. It is imperative that all review comments are channeled through the S&E Engineer to ensure consistency between the final bridge plans, specifications and estimate.

   For a detailed description of the S&E Engineer's responsibilities, see Section 12.4.

7. Design Unit Supervisor Responsibility

   a. The Unit Supervisor is responsible to the Bridge Design Engineer for the timely completion and quality of the bridge plans.

   b. The Unit Supervisor works closely with the Project Coordinator and the design team (designer, checker, and structural detailer) during the design and plan preparation phases to help avoid major changes late in the design process. Activities during the course of design include:

      (1) Evaluate the complexity of the project and the designer's skill and classification level to deliver the project in a timely manner. Determine both the degree of supervision necessary for the designer and the amount of checking required by the checker.

      (2) Assist the design team in defining the scope of work, identifying the tasks to be accomplishedand developing a project work plan.

      (3) Make suitable staffing assignments and develop a design team time estimate to ensure that the project can be completed on time and within budget.

      (4) Review and approve design criteria before start of design.

      (5) Help lead designer conduct face-to-face project meetings, such as: project "kick-off" and "wrap-up" meetings with Region, geotechnical staff, bridge construction, and consultants to resolve outstanding issues.

      (6) Participate in coordinating, scheduling, and communicating with stakeholders, customers, and outside agencies relating to major structural design issues.

      (7) Facilitate resolution of major project design issues.

      (8) Assist the design team with planning, anticipating possible problems, collectively identifying solutions, and facilitating timely delivery of needed information, such as geometrics, hydraulics, foundation information, etc.

      (9) Interact with design team regularly to discuss progress, problems, schedule and budget, analysis techniques, constructability and design issues. Always encourage forward thinking, innovative ideas and suggestions for quality improvement.

      (10) Arrange for and provide the necessary resources, time and tools for the design team to do the job right the first time. Offer assistance to help resolve questions or problems.

      (11) Help document and disseminate information on special features and lessons learned for the benefit of others and future projects.

      (12) Mentor and train designers and detailers through the assignment of a variety of structure types.

c. The Unit Supervisor works closely with the design team during the plan review phase. Review efforts should concentrate on reviewing the completed plan details and design calculations for completeness and for agreement with office criteria and office practices. Review the following periodically and at the end of the project:

(1) Design Criteria

- Seismic design methodology, acceleration coefficient ("a" value), and any seismic analysis assumptions.
- Foundation report recommendations, selection of alternates.
- Deviations from AASHTO, BDM, and proper consideration of any applicable Design Memorandums.

(2) Design Time and Budget

d. Estimate time to complete the project. Plan resource allocation for completing the project to meet the scheduled Ad Date and budget. Monitor monthly time spent on the project.

At the end of each month, estimate time remaining to complete project, percent completed, and whether project is on or behind schedule.

Plan and assign workforce to ensure a timely delivery of the project within the estimated time and budget. At monthly supervisors' scheduling meetings, notify the Bridge Projects Engineer if a project is behind schedule.

e. Advise Region of any project scope creep and construction cost increases. As a minimum, use quarterly status reports to update Region on project progress.

f. Use appropriate computer scheduling software or other means to monitor time usage, to allocate resources, and to plan projects.

g. Review constructability issues. Are there any problems unique to the project?

h. Review the final plans for the following:

(1) Scan the job file for unusual items relating to geometrics, hydraulics, geotechnical, environmental, etc.

(2) Overall review of sheet #1, the bridge layout for:

- Consistency — especially for multiple bridge project
- Missing information

(3) Review footing layout for conformance to Bridge Plan and for adequacy of information given. Generally, the field personnel shall be given enough information to "layout" the footings in the field without referring to any other sheets. Plan details shall be clear, precise, and dimensions tied to base references, such as: a survey line or defined centerline of bridge.

(4) Review the sequence of the plan sheets. The plan sheets should adhere to the following order: layout, footing layout, substructures, superstructures, miscellaneous details, barriers, and barlist. Also check for appropriateness of the titles.

(5) Review overall dimensions and elevations, spot check for compatibility. For example, check compatibility between superstructures and substructure. Also spot check bar marks.

(6) Use common sense and experience to review structural dimensions and reinforcement for structural adequacy. When in doubt, question the designer and checker.

i. Stamp and sign the plans in blue ink.

8. Bridge Design Engineer's Responsibilities

   The Bridge Design Engineer is the coach, mentor, and facilitator for the WSDOT QC/QA Bridge Design Procedure. The leadership and support provided by this position is a major influence in assuring bridge design quality for structural designs performed by both WSDOT and consultants. The following summarizes the key responsibilities of the Bridge Design Engineer related to QC/QA:

   a. Prior to the Bridge Design Engineer stamping and signing any plans, he/she shall perform a structural/constructability review of the plans. This is a quality assurance (QA) function as well as meeting the "responsible charge" requirements of state laws relating to Professional Engineers.

   b. Review and approve the Preliminary Bridge Plans. The primary focus for this responsibility is to assure that the most cost-effective and appropriate structure type is selected for a particular bridge site.

   c. Review unique project special provisions and Standard Specification modifications relating to structures.

   d. Facilitate partnerships between WSDOT, consultants, and the construction industry stakeholders to facilitate and improve design quality.

   e. Encourage designer creativity and innovation through forward thinking.

   f. Exercise leadership and direction for maintaining a progressive and up to date Bridge Design Manual.

   g. Create an open and supportive office environment in which Design Section staff are empowered to do high quality structural design work.

   h. Create professional growth opportunities through an office culture where learning is emphasized.

   i. Encourage continuing professional development through training opportunities, attendance at seminars and conferences, formal education opportunities, and technical writing.

9. General Bridge Plan Stamping and Signature Policy

   The stamping and signing of bridge plans is the final step in the Bridge QC/QA procedure. It signifies a review of the plans and details by those in responsible charge for the bridge plans. At least one Licensed Structural Engineer shall stamp and sign each contract plan sheet (except the bar list).

   For contract plans prepared by a licensed Civil or licensed Structural Engineer, the Unit Manager and the licensed Civil or licensed Structural Engineer co-seal and sign the plans, except the bridge layout sheet. The bridge layout sheet is sealed and signed by the Bridge Engineer or the Bridge Design Engineer in his absence.

   For contract plans not prepared by a licensed Civil or licensed Structural Engineer , the Unit Manager and the Bridge Design Engineer co-seal and sign the plans except the bridge layout sheet. The bridge layout sheet is sealed and signed by the Bridge Engineer or the Bridge Design Engineer in his absence.

B. Consultant PS&E — Projects on WSDOT Right of Way

PS&E prepared by consultants will follow a similar QC/QA procedure as that shown above for WSDOT prepared PS&E's and, as a minimum, shall include the following elements:

1. WSDOT Consultant Liaison Engineer's Responsibilities
   a. Review scope of work.
   b. Negotiate contract and consultant's Task Assignments.
   c. Coordinate/Negotiate Changes to Scope of Work.
2. WSDOT Design Reviewer's or Coordinator's Responsibilities
   a. Early in the project, review consultant's design criteria, and standard details for consistency with WSDOT practices and other bridge designs in project.
   b. Review the job file as prepared by the Preliminary Plan Engineer.
   c. Identify resources needed to complete work.
   d. Initiate a project start-up meeting with the Consultant to discuss design criteria, submittal schedule and expectations, and also to familiarize himself/herself with the Consultant's designers.
   e. Reach agreement early in the design process regarding structural concepts and design methods to be used.
   f. Identify who is responsible for what and when all intermediate constructability, Bridge Plans, and Bridge PS&E review submittals are to be made.
   g. Monitor progress.
   h. Facilitate communication, including face-to-face meetings.
   i. Verify that the Consultant's design has been checked by the Consultant's checker at the 100% submittal. The checker's calculations should be included in the designer's calculation set.
   j. Review consultant's design calculations and plans for completeness and conformance to Bridge Office design practice. The plans shall be checked for constructability, consistency, clarity and compliance. Also, selectively check dimensions and elevations.
   k. Resolve differences.
3. WSDOT Design Unit Supervisor's Responsibilities
   a. Encourage and facilitate communication.
   b. Early involvement to assure that design concepts are appropriate.
   c. Empower Design Reviewer or Coordinator.
   d. Facilitate resolution of issues beyond authority of WSDOT Reviewer or Coordinator.
   e. Facilitate face-to-face meetings.
4. WSDOT S&E Engineer's Responsibilities

   See Section 12.4.8.

5. WSDOT Bridge Design Engineer's Responsibilities

   a. Cursory review of design plans.

   b. Signature approval of S&E bridge contract package.

C. Consultant PS&E — Projects on County and City Right of Way

Counties and cities frequently hire Consultants to design bridges. WSDOT Highways and Local Programs Office determine which projects are to be reviewed by the Bridge and Structures Office.

WSDOT Highways and Local Programs send the PS&E to the Bridge Projects Engineer for assignment when a review is required. The Bridge and Structures Office's Consultant Liaison Engineer is not involved.

A WSDOT Design Reviewer or Coordinator will be assigned to the project and will review the project as outlined for Consultant PS&E — Projects on WSDOT Right of Way (see Section 1.3.2.B).

Two sets of plans with the reviewers' comments marked in red should be returned to the Bridge Projects Unit. One set of plans will be returned to Highways and Local Programs. The Bridge Scheduling Engineer will file the other set in the Bridge Projects Unit.

The first review should be made of the Preliminary Plan followed later by review of the PS&E and design calculations. Comments are treated as advisory, although major structural issues must be addressed and corrected. An engineer from the county, city, or consultant may contact the reviewer to discuss the comments.

1.3.3 Design/Check Calculation File

A. File of Calculations

The Bridge and Structures Office maintains a file of all pertinent design/check calculations for documentation and future reference. (See Section 1.3.8 Archiving Design Calculations, Design Files, and S&E Files).

B. Procedures

After an assigned project is completed and the bridge is built, the designer shall turn in a bound file containing the design/check calculations for archiving. The front cover should have a label (See Figure 1.3.8-1).

C. File Inclusions

The following items should be included in the file:

1. Index Sheets

   Number all calculation sheets and prepare an index by subject with the corresponding sheet numbers.

   List the name of the project, SR Number, designer/checker initials, date (month, day, and year), and Unit Supervisor's initials.

2. Design Calculations

   The design calculations should include design criteria, design assumptions, loadings, structural analysis, one set of moment and shear diagrams and pertinent computer input and output data (reduced to 8½" by 11" sheet size).

   The design criteria, design assumptions, and special design features should follow in that order behind the index.

3. Special Design Features

   Brief narrative of major design decisions or revisions and the reasons for them.

4. Construction Problems or Revisions

   Not all construction problems can be anticipated during the design of the structure; therefore, construction problems arise during construction, which will require revisions. Calculations for revisions made during construction should be included in the design/check calculation file when construction is completed.

D. File Exclusions

The following items should not be included in the file:

1. Geometric calculations.
2. Irrelevant computer information.
3. Prints of Office Standard Sheets.
4. Irrelevant sketches.
5. Voided sheets.
6. Preliminary design calculations and drawings unless used in the final design.
7. Test hole logs.
8. Quantity calculations.

1.3.4 PS&E Review Period

See BDM Section 12.4.10 for PS&E Review Period and Turn-in for AD Copy activities.

1.3.5 Addenda

Plan or specification revisions during the advertising period require an addendum. The Specifications and Estimate Engineer will evaluate the need for the addendum after consultation with the HQ Construction — Bridge, Region, and the HQ or Region Plans Branch. The Bridge Design Engineer or the Unit Supervisor must initial all addenda.

For addenda to contract plans, obtain the original drawing from the Bridge Projects Unit. Use shading to mark all changes (except deletions) and place a revision note at the bottom of the sheet (Region and HQ Plans Branch jointly determine addendum date) and a description of the change. Return the 11" by 17" signed original and copy to the Specifications and Estimate Engineer who will submit the copy to the HQ Plans Branch for processing. See Chapter 12 for additional information.

For changes to specifications, submit a copy of the page with the change to the Specifications and Estimate Engineer for processing.

1.3.6 Shop Plans and Permanent Structure Construction Procedures

This section pertains to fabrication shop plans, weld procedures, electrical and mechanical items, geotechnical procedures, such as: drilled shafts and tieback walls, and other miscellaneous items related to permanent construction.

The following is a guide for checking shop plans and permanent structure construction procedures.

A. Bridge Shop Plans and Procedures

1. Mark one copy of each sheet with the following, near the title block, in red pen or with a rubber stamp:

   Office Copy
   Contract (number)
   (Checker's initials) (Date)
   Approval Status (A, AAN, RFC or Structurally Acceptable)

2. On the Bridge Office copy, mark with red pen any errors or corrections. Yellow shall be used for highlighting the checked items. The red pen marks will be copied onto the other copies and returned to the Region Project Engineer. Comments made with red pen, especially for 8½" by 11" or 11" by 17" size sheets, shall be clear, neat, and conducive to being reproduced by Xerox. These comments should be "bubbled" so they stand out on a black and white Xerox copy. Use of large sheets should be discouraged because these require extra staff assistance and time to make these copies by hand.

3. Items to be checked are typically as follows: Check against Contract Plans and Addenda, Special Provisions, Previously Approved Changes and Standard Specifications.

   a. Material specifications (ASTM specifications, hardness, alloy and temper, etc.).

   b. Size of member and fasteners.

   c. Length dimensions, if shown on the Contract Plans.

   d. Finish (surface finish, galvanizing, anodizing, painting, etc.).

   e. Weld size and type and welding procedure if required.

   f. Strand or rebar placement, jacking procedure, stress calculations, elongations, etc.

   g. Fabrication — reaming, drilling, and assembly procedures.

   h. Adequacy of details.

   i. Erection procedures.

   For prestressed girders and post-tensioning shop plan review see BDM 5.6.3A and 5.8.6C respectively.

4. Items Not Requiring Check:

   a. Quantities in bill of materials.

   b. Length dimensions not shown on Contract Plans except for spot checking and is emphasized by stamping the plans: *Geometry Not Reviewed by the Bridge and Structures Office.*

5. Project Engineer's Copy

   Do not use the Project Engineer's copy (comments or corrections are in green) as the office copy. Transfer the Project Engineer's corrections, if pertinent, to the office copy using red pen. The Project Engineer's comments may also be received by E-mail.

6. Marking Copies

   When finished, mark the office copy with one of five categories in red pen, lower right corner.

   a. "A"

      Approved, No Corrections required.

   b. "AAN"

      Approved As Noted — minor corrections only. Do not place written questions on an approved as noted sheet.

   c. "RFC"

      Returned for Correction — major corrections are required which requires a complete resubmittal.

   d. "Structurally Acceptable"

      This is appropriate for items that are not required to be "Approved" per the contract, such as: work platforms, submittals from various local agencies or developers, and other items that are reviewed as a courtesy.

   e. "Structurally Acceptable But Does Not Conform to the Contract Requirements"

      This is appropriate when a deviation from the contract is found but is determined to be structurally acceptable.

   If in doubt between AAN and RFC, check with the Unit Supervisor or Construction Support Engineer. An acceptable detail may be shown in red. Mark the plans *Approved As Noted* provided that the detail is clearly noted *Suggested Correction — Otherwise Revise and Resubmit*.

   Do not mark the other copies. The Construction Support Unit will do this.

   Notify the Construction Support Engineer if there are any structurally acceptable deviations to the contract plans. The Construction Support Engineer will notify both the Region Project Engineer and HQ Construction-Bridge, who may have to approve a change order and provide justification for the change order.

   Notify the Unit Supervisor and the Construction Support Engineer if problems are encountered which may cause a delay in the checking of the shop plans or completion of the contract. Typically, WSDOT administered contracts require reviews to be completed within 30 days. The review time starts when the Project Engineer first receives the submittal from the Contractor and ends when the Contractor has received the submittal back from the Project Engineer. The Bridge Office does not have the entire 30-day review period to complete the review. Therefore, designers should give construction reviews high priority and complete reviews in a timely manner so costly construction delays are avoided. Time is also required for marking, mailing and other processing. It is the goal of the Bridge and Structures Office to return reviewed submittals back to the Project Engineer within 7 to 14 days of their receipt by the Bridge Construction Support Unit.

Return all shop drawings and Contract Plans to the Construction Support Unit when checking is completed. Include a list of any deviations from the Contract Plans that are allowed and a list of any disagreements with the Project Engineer's comments (regardless of how minor they may be).

If deviations from the Contract Plans are to be allowed, a Change Order may be required. Alert the Construction Support Unit so that their transmittal letter may inform the Region and the HQ Construction - Bridge.

Under no circumstances should the reviewer mark on the shop plans that a change order is required or notify the Project Engineer that a change order is required. The authority for determining whether a change order is required rests with HQ Construction - Bridge.

B. Sign Structure, Signal, and Illumination Shop Plans

In addition to the instructions described under Section 1.3.6A Bridge Shop Plans and Procedures, the following instructions apply:

1. Review the shop plans to ensure that the pole sizes conform to the Contract Plans. Determine if the fabricator has supplied plans for each pole or type of pole called for in the contract.
2. The Project Engineer's copy may show shaft lengths where not shown on Contract Plans or whether a change from Contract Plans is required. Manufacturer's details may vary slightly from contract plan requirements, but must be structurally adequate to be acceptable.

C. Geotechnical Submittals

The Bridge Office and the Geotechnical Services Branch concurrently review these submittals which may include special design proprietary retaining walls, drilled shafts, ground anchors, and soldier piles. HQ Construction Office - Bridge is included for the review of drill shaft installation plans. The Construction Support Unit combines these comments and prepares a unified reply that is returned to the Project Engineer

1.3.7 Contract Plan Changes (Change Orders and As-Builts)

A. Request for Changes

The following is intended as a guide for processing changes to the design plans after a project has been awarded.

For projects which have been assigned a Bridge Technical Advisor (BTA), structural design change orders can be approved at the Project Engineer's level provided the instructions outlined in the *Construction Manual* are followed.

For all other projects, all changes are to be forwarded through the Construction Support Unit, which will inform the HQ Construction Engineer - Bridge. Responses to inquiries should be handled as follows:

1. Request by Contractor or Supplier

   A designer, BTA, or Unit Supervisor contacted directly by a contractor/supplier may discuss a proposed change with the contractor/supplier, but shall clearly tell the contractor/supplier to formally submit the proposed change though the Project Engineer and that the discussion in no way implies approval of the proposed change. Designers are to inform their Unit Supervisor if they are contacted.

2. Request From the Region Project Engineer

   Requests for changes directly from the Project Engineer to designer or the Unit Supervisor should be discouraged. The Project Engineer should contact HQ Construction - Bridge, who in turn will contact the designer or Unit Supervisor if clarification is needed regarding changes. The Construction Support Unit should be informed of any changes.

3. Request From the Region Construction Engineer

   Requests from the Region Construction Engineer are to be handled like requests from the Region Project Engineer.

4. Request From the HQ Construction - Bridge

   Requests for changes from HQ Construction - Bridge are usually made through the Construction Support Unit and not directly to the Design Unit. However, sometimes, it is necessary to work directly with the Design Unit. The Construction Support Unit should be informed of any decisions made involving changes to the Contract Plans.

5. Request From the Design Unit

   Request for changes from the Design Unit due to plan errors or omissions shall be discussed with the Bridge Design Engineer prior to revising and issuing new plan sheets.

B. Processing Contract Revisions

Changes to the Contract Plans or Specifications subsequent to the award of the contract may require a contract plan revision. Revised or additional plan sheets, which clearly identify the change on the plans, may be needed. When a revision or an additional drawing is necessary, request the original plan sheets from the Construction Support Unit's Bridge Plans Engineer and prepare revised or new original plan sheets.

Sign, date, and send the new plan sheets to the Bridge Plans Engineer. Send two paper copies to HQ Construction-Bridge. The Construction Support Unit requires one paper copy. The Design Unit requires one or more paper copies. One paper print, stamped *"As Constructed Plans"*, shall be sent to the Project Engineer, who shall use it to mark construction changes and forward them as *"As-Built Plans"* to the Bridge Plans Engineer upon project completion. The Designer is responsible for making the prints and distributing them.

This process applies to all contracts including HQ Ad and Award, Region Ad and Award, or Local Agency Ad and Award.

Whenever new plan sheets are required as part of a contract revision, the information in the title blocks of these sheets must be identical to the title blocks of the contract they are for (e.g., Job Number, Contract No., Fed. Aid Proj. No., Approved by, and the Project Name). These title blocks shall also be initialed by the Bridge Design Engineer, Unit Supervisor, designer, and reviewer before they are distributed. If the changes are modifications made to an existing sheet, the sheet number will remain the same. A new sheet shall be assigned the same number as the one in the originals that it most closely resembles and shall be given a letter after the number (e.g., if the new sheet applies to the original sheet 25 of 53, then it will have number 25A of 53). The Bridge Plans Engineer in the Construction Support Unit shall store the 11" by 17" original revision sheets.

Every revision will be assigned a number, which shall be enclosed inside a triangle. The assigned number shall be located both at the location of the change on the sheet and in the revision block of the plan sheet along with an explanation of the change.

Any revised sheets shall be sent to HQ Construction-Bridge with a written explanation describing the changes to the contract, justification for the changes, and a list of material quantity additions or deletions.

C. As-Built Plan Process

For more information on the as-built plan process for bridges, see the *As-Built Plans Manual*, prepared by the Bridge and Structures Office, dated August 2003. Copies are available from the Bridge Plans Engineer.

1.3.8 Archiving Design Calculations, Design Files, and S&E Files

A. Upon Award

The Bridge Plans Engineer will collect the Design File (Job File), S&E File and Design Calculations. Files will be placed in a temporary storage space marked as "Design Unit Document Temporary Storage". These cabinets will be locked, and only the Bridge Plans Engineer, the Scheduling Engineer, and the Office Administrator will have keys to them. The Design Files, S&E Files, and Design Calculations are stored under the contract number.

A Bridge and Structures staff member may access the Design Files, S&E Files, or Design Calculations by requesting the files from the Bridge Plans Engineer or the Scheduling Engineer, who will check out the files and note the date and person's name. If a person other than a Bridge and Structures Office staff member requests these documents, the approval of the Bridge Design Engineer or Bridge Projects Engineer will be required for release of the documents.

B. Upon Contract Completion

The designer will place a job file cover label on the file folder (see Figure 1-3.8-1) and update the file with any contract plan changes that have occurred during construction.

Two years after physical completion of the contract, the Bridge Plans Engineer will box and send the documents to the Office of Secretary of State for archive storage, except as otherwise approved by the Bridge Design Engineer.

The Bridge Plans Engineer will maintain a record of the documents location and archive status.

SR # _____ County _____ CS # _____

Bridge Name _____

Bridge # _____ Contract # _____

Contents _____

Designed by _____ Checked by _____

Archive Box # _____ Vol. #_____

Cover Label
Figure 1.3.8-1

1.3.9 Public Disclosure Policy Regarding Bridge Plans

The Bridge Management Engineer is the Bridge and Structures Office's official Public Disclosure contact and shall be contacted for clarification and/or direction.

Executive Order, E1023.0 Public Disclosure, which replaced *Directive D 72-21 Release of Public Records*, provides a specific procedure to follow when there is a request for public records. (See http://wwwi.wsdot.wa.gov/docs).

The Bridge and Structures Office is the "owner" of only two types of "official" records: (1) Design Calculations (until they are turned over to the State Archives Office) and (2) Bridge Inspection Documents.

No records will be disclosed without a written request. This request is to be specific.

As-built plans available on the Bridge and Structures website are not "official" as-built plans. The Regions are the owners of the "official" as-built plans and the procedure for providing requested copies of these plans is similar to the procedure outlined above with the following modifications:

- If you receive a written or verbal request for a set of plans from a person indirectly working for WSDOT (i.e. contractor, consultant), advise them to contact and request the plans from the WSDOT Project Engineer.
- If the request comes from a person directly working on a Bridge Office project as an on-call consultant, have them contact and request the plans from the Bridge and Structures Office's Consultant Liaison Engineer.
- If the request comes from a person not working for WSDOT, they must submit their written request to the person and address noted below and it will be forwarded to the appropriate Region to provide the requested documents.

  Written requests must be sent to:

  Records and Information Service Office
  Washington State Department of Transportation
  310 Maple Park Avenue P. O. Box 47410
  Olympia, WA 98504-7410
  Attn: Ms. Cathy Downs

1.3.10 Use of Computer Software

A. Protection of Intellectual Property

Many of the software tools used by the Bridge and Structures Office are licensed from commercial software vendors. WSDOT is committed to using these tools only as allowed by law and as permitted by software license. WSDOT employees shall comply with the terms and conditions of all licensing agreements and provisions of the Copyright Act and other applicable laws.

Before using any software tools WSDOT employees shall read and understand Instructional Letter 4032.00, Titled "Computer Software Piracy Prevention, and the Protection of Intellectual Property"[1]

B. Policy on Open Source Software

It is the policy of the Bridge and Structures Office to license its own engineering software as open source, and to prefer and promote the use of open source software, within the bridge engineering community.

To support this policy on open source bridge engineering software, the Bridge and Structures Office is a founding and participating member of the Alternate Route Project. The purpose of the Alternate Route Project is to serve as a focal point for the collaborative and cooperative development of open source bridge engineering software tools.

C. Approved Software Tools

A list of approved software tools available for use by WSDOT bridge design engineers is available at http://wwwi.wsdot.wa.gov/eesc/bridge/software. Note that this list is only available on the WSDOT intranet. WSDOT does not require consulting engineers to use any specific software tools, so long as the use of the tools are in accordance with sound engineering practice, and does not violate software licensing agreements and Copyright law.

When using personal design tools created by others, such as a spreadsheet or MathCAD document, the designer is responsible for thoroughly checking the tool to ensure the integrity of the structural analysis and design.

1.4 Coordination With Other Divisions and Agencies

During the various phases of design, it is necessary to coordinate the elements of the bridge design function with the requirements of other divisions and agencies. E-mail messages, telephone calls, and other direct communication with other offices are necessary and appropriate. Adequate communications are essential but organizational format and lines of responsibility must be recognized. However, a written request sent through proper channels is required before work can be done or design changes made on projects.

1.4.1 Preliminary Planning Phase

See Chapter 2.1 of this manual for coordination required at the preliminary planning phase.

1.4.2 Final Design Phase

A. Coordination With Region

Final coordination of the bridge design with Region requirements must be accomplished during the final design phase. This is normally done with the Region Project Engineer, Region Design Engineer, or Region Plans Engineer. Details such as division of quantity items between the Region PS&E and bridge PS&E are very important to a final contract plan set. The Region PS&E and bridge PS&E are combined by the Region Plans Branch. However, coordination should be accomplished before this time.

During the design of a project for a Region level contract, the Region shall provide a copy of the proposed structural plans (such as retaining walls, barrier, large culverts, etc.) to the Bridge and Structures Office. The Bridge and Structures Office will review these plans and indicate any required changes and then send them back to the Region.

The Region shall incorporate the changes prior to contract advertisement.

After contract advertisement, the Region shall return the original plan sheets to Bridge and Structures Office. These sheets shall be held in temporary storage until the Region completes the "As Constructed Plans" for them.

The Region shall then transmit the "As Constructed Plans" to Bridge and Structures Office where they will be transferred to the original plans for permanent storage. Upon request, the Region will be provided copies of these plans by the Bridge and Structures Office.

B. Technical Design Matters

Technical coordination must be done with the HQ Materials Laboratory Foundation Engineer and with the HQ Hydraulic Engineer for matters pertaining to their responsibilities. A portion of the criteria for a project design may be derived from this coordination; otherwise it shall be developed by the designer and approved by the Bridge Design Engineer.

The designer should ensure uniformity of structural details, bid items, specifications, and other items when two or more structures are to be advertised under the same contract.

1.5 Bridge Design Scheduling

1.5.1 General

The Bridge Projects Engineer is responsible for workforce projections, scheduling, and monitoring progress of projects. The *Bridge Design Schedule (BDS)* is used to track the progress of a project and is updated monthly by the Bridge Scheduling Engineer. A typical project would involve the following steps:

A. Regions advise Bridge and Structures Office of an upcoming project.

B. The Bridge Projects Unit determines the scope of work, estimates design time and cost to prepare preliminary plans, design, and S&E (see Section 1.5.2). The Unit Supervisor may also do this and notify the Bridge Projects Engineer.

C. The project is entered into the BDS with start and due dates for site data preliminary plan, project design, PS&E, and the Ad Date.

D. Bridge site data received.

E. Preliminary design started.

F. Final Design Started — Designer estimates time required for final plans (see Section 1.5.3).

G. Monthly Schedule Update — Each Unit Supervisor is responsible for maintaining a workforce projection, monitoring monthly progress for assigned projects, and reporting progress or any changes to the scope of work or schedule to the Bridge Projects Engineer.

H. Project turned in to S&E unit.

1.5.2 Preliminary Design Schedule

The preliminary design estimate done by the Bridge Projects Unit is based on historical records from past projects taking into consideration the unique features of each project, the efficiencies of designing similar and multiple bridges on the same project, designer's experience, and other appropriate factors.

1.5.3 Final Design Schedule

A. Breakdown of Project Man-Hours Required

Using a spreadsheet, list each item of work required to complete the project and the man-hours required to accomplish them. Certain items of work may have been partially completed during the preliminary design, and this partial completion should be reflected in the columns "% Completed" and "Date Completed." See Appendix 1.5-A1 and 1.5-A2.

The designer or design team leader should research several sources when making the final design time estimate. The following are possible sources that may be used:

The "Bridge Design Summary" contains records of design time and costs for past projects. This summary is kept in the Bridge Projects Unit. The times given include preliminary plan, design, check, drafting, and supervision.

The Bridge Projects Unit has "Bridge Construction Cost Summary" books. These are grouped according to bridge types and have records of design time, number of drawings, and bridge cost.

B. Estimate Design Time Required

The designer or design team leader shall determine an estimate of design time required to complete the project. The use of a spreadsheet, or other means is encouraged to ensure timely completion and adherence to the schedule. Use 150 hours for one man month.

The following percentages should be used for the following activities:

Activity No.	Percentage
1	40
2	20
3	20
4	5
5	5
6	5
7	5
Total	100%

The individual activities include the specific items as follows under each major activity.

Activity No. 1 Design — See Section 1.3.2.A.2 — Includes:

1. Project coordination and maintaining the Design File.
2. Geometric computations.
3. Design calculations.
4. Complete check of all plan sheets by the designer.
5. Compute quantities and prepare barlist.
6. Preparing special provisions checklist.
7. Assemble backup data covering any unusual feature in the Design File.

Activity No. 2 Design Check — See Section 1.3.2.A.3 — Includes:

1. Checking design at maximum stress locations.
2. Checking major items on the drawings, including geometrics.
3. Additional checking required.

Activity No. 3 Drawings — See Section 1.3.2.A.4 — Includes:

1. Preparation of all drawings.

Activity No. 4 Revisions — Includes:

1. Revisions resulting from the checker’s check.
2. Revisions resulting from the Unit Supervisor’s review.
3. Revisions from S&E Engineer’s review.
4. Revisions from Region’s review.

Activity No. 5 Quantities — Includes:

1. Compute quantities including barlist.
2. Check quantities and barlist.

Activity No. 6 S&E — See Section 12.4 — Includes:

1. Prepare S&E.
2. Prepare working day schedule.

Activity No. 7 Project Review — Includes:

1. Unit Supervisor and Specialist's review.

C. Monthly Project Progress Report

The designer or design team leader is responsible for determining monthly project progress and reporting the results to the Unit Supervisor. The Unit Supervisor is responsible for monthly progress reports using information from the designer or design team leader. Any discrepancies between actual progress and the project schedule must be addressed. Report any revisions to the workforce assigned to the project, hours assigned to activities, or project schedule revisions to the Bridge Projects Engineer and Region.

The designer may use a computer spreadsheet, to track the progress of the project and as an aid in evaluating the percent complete. Other tools include using an Excel spreadsheet listing bridge sheet plans by title, bridge sheet number, percent design complete, percent design check, percent plan details completed, and percent plan details checked. This data allows the designer or design team leader to rapidly determine percent of project completion and where resources need to be allocated to complete the project on schedule.

1.6 Guidelines for Bridge Site Visits

The following guidelines are established to help all staff in determining the need for visiting bridge sites prior to final design. These guidelines should apply to consultants as well as to our own staff. In all cases, the Region project engineer should be made aware of the site visit so they may have the opportunity to participate. Region participation is very useful prior to preparing the preliminary bridge plans.

1.6.1 Bridge Rehabilitation Projects

This section pertains to major bridge rehabilitation projects and excludes rail and minor expansion joint rehabilitation projects. It is critical that the design team know as much as possible about the bridge which is to be rehabilitated. Recent bridge inspection reports, prepared by inspectors from the Bridge Preservation Office (BPO), contain useful information on the condition of existing bridges. The bridge inspection reports, as well as as-built plans, are available on the Intranet through *Bridge Engineering Information System (BEIST).* BPO maintains *BEIST*.

As-built drawings and contract documents are also helpful, but may not necessarily be accurate. At least one bridge site visit is necessary for this type of project. In some cases, an in-depth inspection with experienced BPO inspectors is appropriate. The decision to perform an in-depth inspection should include the Unit Supervisor, Region, the Bridge Design Engineer, and the Bridge Preservation Engineer.

It may be necessary to use BPO's Under Bridge Inspection Truck (UBIT) if there is a need to access details and obtain measurements during the field visit. Advance planning and coordination with BPO will be necessary if UBIT equipment is required because of BPO's heavy workload and the need to provide traffic control well in advance of the site visit.

1.6.2 Bridge Widening and Seismic Retrofits

For this type of bridge project, it is important that the design team is familiar with the features and condition of the existing bridge. There is good information regarding the condition of existing bridges on *BEIST* and at the Bridge Preservation Office. As-built drawings and contract documents are also helpful, but may not necessarily be accurate. A site visit is recommended for this type of project if the bridge to be widened has unique features or is other than a standard prestressed girder bridge with elastomeric bearings.

1.6.3 Rail and Minor Expansion Joint Retrofits

Generally, photographs and site information from the Region along with as-built plans and condition survey information are adequate for most of these types of projects. However, if there is any doubt about the adequacy of the available information or concern about accelerated deterioration of the structural elements to be retrofitted, a site visit is recommended.

1.6.4 New Bridges

Generally, photographs and site data from the Region are adequate for most new bridge designs. However, if the new bridge is a replacement for an existing bridge, a site visit is recommended, particularly if the project requires staged removal of the existing bridge and/or staged construction of the new bridge.

1.6.5 Bridge Demolition

If bridge demolition is required as part of a project, a site visit would help the design team determine if there are unique site restrictions that could affect the demolition. If unique site restrictions are observed, they should be documented, included in the job file, and noted on the special provisions checklist.

Before making a site visit, the Bridge Preservation Office and the Region should be contacted to determine if there are any unique site conditions or safety hazards. Proper safety equipment and procedures should always be followed during any site visit.

When making a site visit, it is important to obtain as much information as possible. Digital photographs, video records with spoken commentary, field measurements, and field notes are appropriate forms of field information. A written or pictorial record should be made of any observed problems with an existing bridge or obvious site problems. The site visit data would then be incorporated into the job file. This information will be a valuable asset in preparing constructible and cost-effective structural designs.

It is important to include site visits as part of the consultant's scope of work when negotiating for structural design work.

1.6.6 Proximity of Railroads Adjacent to the Bridge Site

During the site visit, it should be noted if there are railroad tracks or railroad structures adjacent to the proposed bridge site. If there are, this will require that a *Railroad Shoring Plan* be included in the bridge plans for any foundation excavation adjacent to the railroad. The reason for including the *Railroad Shoring Plan* is to obtain advance approval of the shoring plan from the railroad so that waiting for the railroad's approval will not cause a delay during construction. The contractor will have to resubmit a revised *Railroad Shoring Plan* to the railroad for approval if the contractor wishes to change any details of the approved *Railroad Shoring Plan* during construction.

At the PS&E submittal phase, the Specifications and Estimates Engineer will send copies of the *Railroad Shoring Plan* to the WSDOT Railroad Liaison Engineer so it can be sent to the railroad for approval.

1.99 Bibliography

1. *LRFD Bridge Design Specifications*, Latest Edition and Interims. American Association of State Highway and Transportation Officials (AASHTO), Washington, D.C.
2. Design Manual, WSDOT M22-01.
3. Construction Manual, WSDOT M41-01.
4. *As-Built Plans Manual*, WSDOT Bridge & Structures Office, August 2003.

Washington State Department of Transportation

Breakdown of Project Manhours Required

Job No. | SR | Project | Made By | Date

No.	Drawing or Item	Design				Check				Draw				Check Drawing				Comments
		By	% Completed	Hours Required	Date Completed	By	% Completed	Hours Required	Date Completed	By	% Completed	Hours Required	Date Completed	By	% Completed	Hours Required	Date Completed	
1																		
2																		
3																		
4																		
5																		
6																		
7																		
8																		
9																		
10																		
11																		
12																		
13																		
14																		
15																		
16																		
17																		
18																		
19																		
20																		
21																		
22																		

DOT 232-002 (formerly C1M5)
Rev 3/91

Appendix 1.5-A2 Monthly Project Progress Report Form

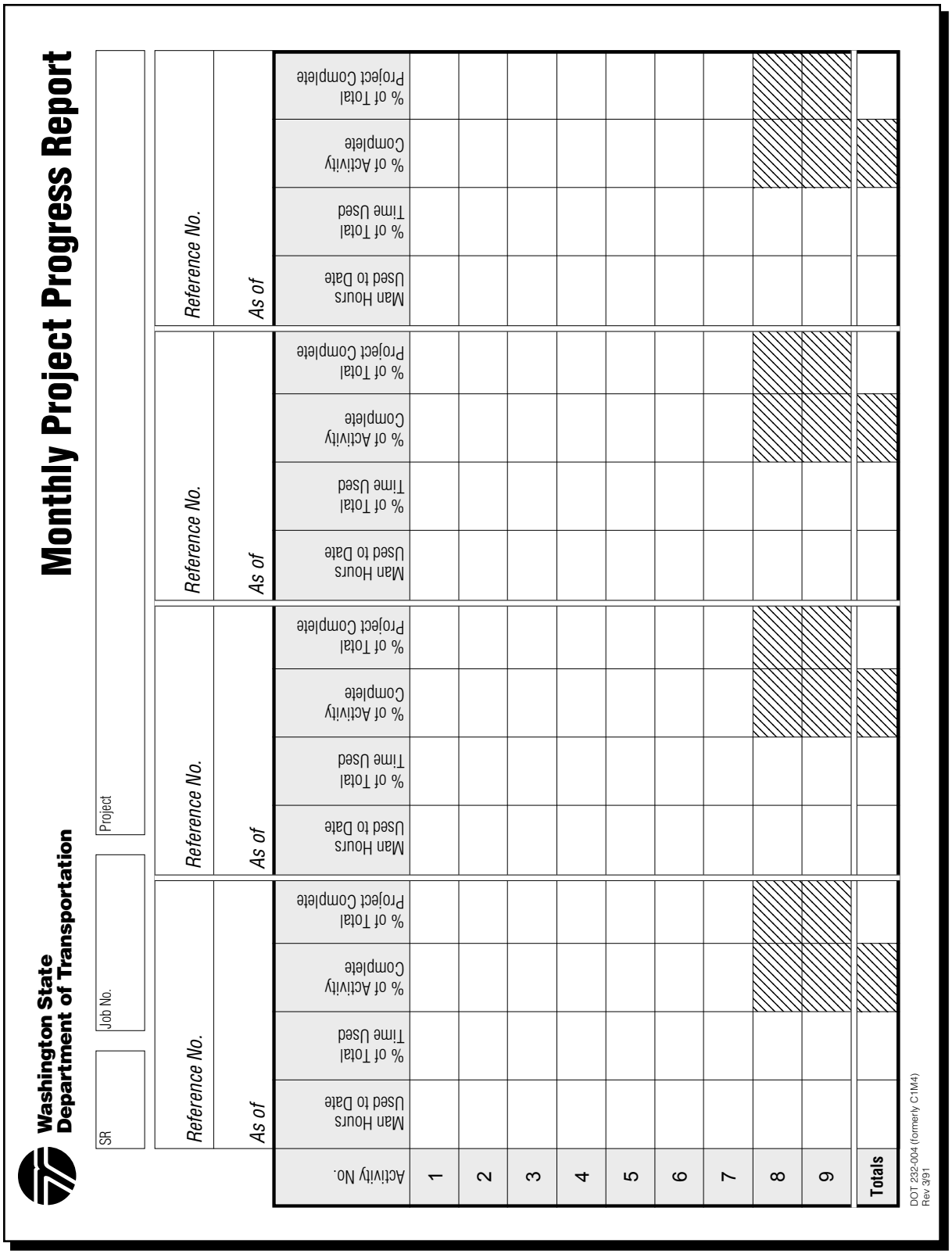

Washington State Department of Transportation

Monthly Project Progress Report

SR | Job No. | Project

Activity No.	Reference No. / As of: Man Hours Used to Date	% of Total Time Used	% of Activity Complete	% of Total Project Complete	Reference No. / As of: Man Hours Used to Date	% of Total Time Used	% of Activity Complete	% of Total Project Complete	Reference No. / As of: Man Hours Used to Date	% of Total Time Used	% of Activity Complete	% of Total Project Complete
1												
2												
3												
4												
5												
6												
7												
8												
9												
Totals												

DOT 232-004 (formerly C1M4)
Rev 3/91

PROJECT TURN-IN QA/QC WORKSHEET (per BDM Chapter 1.3)

Project Name:

Charge Number:

Design Lead:

Date:

CHECKLIST (Initials required under respective title)

Design Item	Name	Names Listed: DESIGNER	CHECKER	DETAILER	SPECIFICATION WRITER	SPECIALIST APPROVAL: RAIL	BEARING	EXPANSION JOINT	CONCRETE	STEEL	SIGN STRUCTURE	JOB FILE COMPLETE	CALCULATIONS BOUND*

Bridge Design Engineer Check at 90%: _____

Supervisor Plan Review: _____

Required Actions for each Design Item

1) Elevations & Dimensions
2) Quantities & Barlist
3) Detailing Sheet Consistency
4) Detailing Plan Consistency
5) Detailing Office Practices
6) Specification Review
7) 100% Region Comments Incorporated

NOTES:
* Only Bridges are archived. Sign Structures and walls are kept on file in the office by designer of record.

Chapter 2 Preliminary Design Contents

2.1	**Preliminary Studies**		2.1-1
	2.1.1	Interdisciplinary Design Studies	2.1-1
	2.1.2	Value Engineering Studies	2.1-1
	2.1.3	Preliminary Recommendations for Bridge Rehabilitation Projects	2.1-2
	2.1.4	Preliminary Recommendations for New Bridge Projects	2.1-2
	2.1.5	Type, Size, and Location (TS&L) Reports	2.1-3
2.2	**Preliminary Plan**		2.2-1
	2.2.1	Development of the Preliminary Plan	2.2-1
	2.2.2	Documentation	2.2-2
	2.2.3	General Factors for Consideration	2.2-3
	2.2.4	Permits	2.2-5
	2.2.5	Preliminary Cost Estimate	2.2-6
	2.2.6	Approvals	2.2-6
2.3	**Preliminary Plan Criteria**		2.3-1
	2.3.1	Highway Crossings	2.3-1
	2.3.2	Railroad Crossings	2.3-4
	2.3.3	Water Crossings	2.3-6
	2.3.4	Bridge Widenings	2.3-8
	2.3.5	Detour Structures	2.3-9
	2.3.6	Retaining Walls and Noise Walls	2.3-9
	2.3.7	Bridge Deck Drainage	2.3-9
	2.3.8	Bridge Deck Protective Systems	2.3-9
	2.3.9	Construction Clearances	2.3-10
	2.3.10	Design Guides for Falsework Depth Requirements	2.3-10
	2.3.11	Inspection and Maintenance Access	2.3-11
2.4	**Selection of Structure Type**		2.4-1
	2.4.1	Bridge Types	2.4-1
	2.4.2	Wall Types	2.4-6
2.5	**Aesthetic Considerations**		2.5-1
	2.5.1	General Visual Impact	2.5-1
	2.5.2	End Piers	2.5-1
	2.5.3	Intermediate Piers	2.5-2
	2.5.4	Barrier and Wall Surface Treatments	2.5-2
	2.5.5	Superstructure	2.5-3
2.6	**Miscellaneous**		2.6-1
	2.6.1	Structure Costs	2.6-1
	2.6.2	Handling and Shipping Precast Members and Steel Beams	2.6-1
	2.6.3	Salvage of Materials	2.6-1
2.7	**WSDOT Standard Highway Bridge**		2.7-1
	2.7.1	Design Elements	2.7-1
	2.7.2	Detailing the Preliminary Plan	2.7-2
2.99	**Bibliography**		2.99-1

Appendix A

Appendix 2.2-A1	Bridge Site Date General	2.2-A1-1
Appendix 2.2-A2	Bridge Site Date Rehabilitation	2.2-A2-1
Appendix 2.2-A3	Bridge Site Date Stream Crossing	2.2-A3-1
Appendix 2.2-A4	Preliminary Plan Checklist	2.2-A4-1
Appendix 2.3-A1	Bridge Stage Construction Comparison	2.3-A1-1
Appendix 2.3-A2-1		2.3-A2-1
Appendix 2.4-A1-1		2.4-A1-1
Appendix 2.7-A1-1		2.7-A1-1

Appendix B

Appendix 2-B-1		2-B-1
Appendix 2-B-2		2-B-2
Appendix 2-B-3		2-B-3
Appendix 2-B-4		2-B-4
Appendix 2-B-5		2-B-5
Appendix 2-B-6		2-B-6
Appendix 2-B-7		2-B-7
Appendix 2-B-8		2-B-8
Appendix 2-B-9		2-B-9
Appendix 2.3-B2-1	Protective Screening Details	2.3-B2-1

2.1 Preliminary Studies

2.1.1 Interdisciplinary Design Studies

Region may set up an Interdisciplinary Design Team (IDT) to review the various design alternatives for major projects. The IDT is composed of members from Regions, HQ, outside agencies, and consulting firms. The members have different areas of expertise, contribute ideas, and participate in the selection of design alternatives. This work will often culminate in the publication of an Environmental Impact Statement (EIS).

Bridge designers may be asked to participate either as a support resource or as a member of the IDT.

2.1.2 Value Engineering Studies

Value Engineering (VE) is a review process and analysis of a design project. The VE team seeks to define the most cost-effective means of satisfying the basic function(s) of the project. Usually a VE study takes place before or during the time that the region is working on the design. Occasionally, a VE study examines a project with a completed PS&E. VE studies are normally required for projects with cost overruns.

The VE team is headed by a facilitator and is composed of members with different areas of expertise from Regions, HQ, outside agencies, and consulting firms. The Team Facilitator will lead the team through the VE process. The team will review Region's project as defined by the project's design personnel. The VE team will determine the basic function(s) that are served by the project, brainstorm all possible alternatives to serve the same function(s), evaluate the alternatives for their effectiveness to meet the project's basic functions, determine costs, and prioritize and recommend alternatives. The VE team will prepare a report and present their findings to the region. The Region is then required to investigate and address the VE team's findings in the final design.

Bridge designers may be asked to participate either as a support resource or as a member of the VE team. VE studies usually take place over a three to five day period.

Engineers participating in VE studies and Cost-Risk Assessment meetings shall call the S&E Engineers and double check all costs when providing cost estimates at VE studies and CRA meetings.

2.1.3 Preliminary Recommendations for Bridge Rehabilitation Projects

When the Region starts a bridge rehabilitation project, they will submit a written memo requesting that the Bridge and Structures Office make preliminary project recommendations.

The Bridge and Structures Office will review the as-built plans, load ratings, existing inspection and condition reports prepared by the Bridge Preservation Office (BPO), and schedule a site visit with Region and other stakeholders. Special inspection of certain portions of the structure may be included in the site visit or scheduled later with Region and BPO. The purpose of the inspections is to obtain more detailed information as to the bridge's condition, to obtain dimensions and take photographs of details needed for the project recommendations.

Following the site visit, the next steps are:

- Determine the load capacity of the existing bridge.
- Determine what type of rehabilitation work is needed and time frame required to accomplish the work.
- Determine any special construction staging requirements. Can the bridge be totally shut down for the rehabilitation period? How many lanes will need to be open? Can the work be accomplished during night closures or weekend closures?
- Develop various alternatives and cost estimates for comparison, ranging from "do nothing" to "new replacement".
- Determine what the remaining life expectancies are for the various rehabilitation alternatives.
- Determine the cost of a new replacement bridge.

Note: The FHWA will not participate in funding the bridge rehabilitation project if the rehabilitation costs exceed 50 percent of the cost for a new bridge replacement.

The Bridge and Structures Office will provide Region with a written report with background information. The Region will be given an opportunity to review the draft report and to provide input prior to finalization.

The Bridge Projects Engineer and Specifications & Estimates Engineers provide bridge scoping cost estimates to Regions for their use in determining budgets during Region's project definition phase. The S&E Engineers will check the Bridge Project Engineer's estimate as well as check each other.

2.1.4 Preliminary Recommendations for New Bridge Projects

The Region will seek assistance from the Bridge and Structures Office when they are preparing a design project requiring new bridges. Similar to the procedures outlined above for rehabilitation projects. The Region will submit a written memo requesting that the bridge office make preliminary project recommendations. The Bridge and Structures Office will provide scope of work, cost estimate(s), and a summary of the preferred alternatives with recommendations. Face to face meetings with the Region project staff are recommended prior to sending a written memo.

The Bridge Projects Engineer and Specifications & Estimates Engineers provide bridge scoping cost estimates to Regions for their use in determining budgets during Region's project definition phase. The S&E Engineers will check the Bridge Project Engineer's estimate as well as check each other.

2.1.5 Type, Size, and Location (TS&L) Reports

The Federal Highway Administration (FHWA) requires that major or unusual bridges must have a Type, Size, and Location (TS&L) report prepared. The report will describe the project, proposed structure(s), cost estimates, other design alternatives considered, and recommendations. The report provides justification for the selection of the preferred alternative. Approval by FHWA of the TS&L study is the basis for advancing the project to the design stage.

The FHWA should be contacted as early as possible in the Project Development stage because the FHWA requires a TS&L study for tunnels, movable bridges, unusual structures, and major structures. Smaller bridges that are unusual or bridge projects for Local Agencies may also require a TS&L study. Other projects, such as long viaducts, may not. Check with the Bridge Projects Engineer to see if a TS&L report is necessary.

The preparation of the TS&L report is the responsibility of the Bridge and Structures Office. The TS&L cannot be submitted to FHWA until after the environmental documents have been submitted. However, TS&L preparation need not wait for environmental document approval, but may begin as soon as the bridge site data is available. See Chapter 1110 of the WSDOT *Design Manual* for the type of information required for a bridge site data submittal.

A. TS&L General

The designer should first review the project history in order to become familiar with the project. The environmental and design reports should be reviewed. The bridge site data should be checked so that additional data, maps, or drawings can be requested. A meeting with Region and a site visit should be arranged after reviewing the history of the project.

The Materials Laboratory Geotechnical Services Branch must be contacted early in the TS&L process in order to have foundation information. Specific recommendations on the foundation type must be included in the TS&L report. The Materials Laboratory Geotechnical Services Branch will submit a detailed foundation report for inclusion as an appendix to the TS&L report.

To determine the preferred structural alternative, the designer should:

l. Develop a list of all feasible alternatives. At this stage, the range of alternatives should be kept wide open. Brainstorming with supervisors and other engineers can provide new and innovative solutions.

2. Eliminate the least desirable alternatives by applying the constraints of the project. Question and document the assumptions of any restrictions and constraints. There should be no more than four alternatives at the end of this step.

3. Perform preliminary design calculations for unusual or unique structural problems to verify that the remaining alternatives are feasible.

4. Compare the advantages, disadvantages, and costs of the remaining alternatives to determine the preferred alternative(s).

5. Visit the project site with the Region, Materials Laboratory Geotechnical Services Branch, and HQ Hydraulics staff.

FHWA expects specific information on scour and backwater elevations for the permanent bridge piers, as well as, for any temporary falsework bents placed in the waterway opening.

After the piers have been located, a memo requesting a Hydraulics Report should be sent to the HQ Hydraulics Unit. The HQ Hydraulics Unit will submit a report for inclusion as an appendix to the TS&L report.

The State Bridge and Structures Architect should be consulted early in the TS&L study period. "Notes to the File" should be made documenting the aesthetic requirements and recommendations of the State Bridge and Structures Architect.

Cost backup data is needed for any costs used in the TS&L study. FHWA expects TS&L costs to be based on estimated quantities. This cost data is to be included in an appendix to the TS&L report. The quantities should be compatible with the S&E Engineer's cost breakdown method. The Specifications & Estimates Engineers will check the designer's estimated costs included in TS&L reports. In the case of consultant prepared TS&L reports, the designer shall have the S&E Engineers check the construction costs.

B. TS&L Outline

The TS&L report should describe the project, the proposed structure, and give reasons why the bridge type, size, and location were selected.

1. Cover, Title Sheet, and Index

   These should identify the project, owner, location and the contents of the TS&L.

2. Photographs

   There should be enough color photographs to provide the look and feel of the bridge site. The prints should be numbered and labeled and the location indicated on a diagram.

3. Introduction

   The introduction describes the report, references, and other reports used to prepare the TS&L study. The following reports should be listed, if used.

   - Design Reports and Supplements
   - Environmental Reports
   - Architectural Visual Assessment or Corridor Theme Reports
   - Hydraulic Report
   - Geotechnical Reports

4. Project Description

   The TS&L report clearly defines the project. A vicinity map should be shown. Care should be taken to describe the project adequately but briefly. The project description summarizes the preferred alternative for the project design.

5. Design Criteria

   The design criteria identify the AASHTO LRFD Bridge Design Specifications and AASHTO guide specifications that will be used in the bridge design. Sometimes other design criteria or special loadings are used. These criteria should be listed in the TS&L. Some examples in this category might be the temperature loading used for segmental bridges or areas defined as wetlands.

6. Structural Studies

   The structural studies section documents how the proposed structure Type, Size, and Location were determined. The following considerations should be addressed.

   - Aesthetics
   - Cost Estimates
   - Geometric constraints
   - Project staging and Stage Construction Requirements
   - Foundations
   - Hydraulics
   - Feasibility of construction
   - Structural constraints
   - Maintenance

   This section should describe how each of these factors leads to the preferred alternative. Show how each constraint eliminated or supported the preferred alternatives. Here are some examples. "Prestressed concrete girders could not be used because environmental restrictions required that no permanent piers could be placed in the river. This requires a 230-foot clear span." "Restrictions on falsework placement forced the use of self supporting precast concrete or steel girders."

7. Executive Summary

   The executive summary should be able to "stand alone" as a separate document. The project and structure descriptions should be given. Show the recommended alternative(s) with costs and include a summary of considerations used to select preferred alternatives or to eliminate other alternatives.

8. Drawings

   Preliminary plan drawings of the recommended alternative are included in an appendix. The drawings show the plan, elevation, and typical section. For projects where alternative designs are specified as recommended alternatives, preliminary plan drawings for each of the different structure types shall be included. Supplemental drawings showing special features, such as complex piers, are often included to clearly define the project.

C. Reviews and Submittals

While writing the TS&L report, all major decisions should be discussed with the unit supervisor, who can decide if the Bridge Design Engineer needs to be consulted. A peer review meeting with the Bridge Design Engineer should be scheduled at the 50 percent completion stage. If applicable, the FHWA Bridge Engineer should be invited to provide input.

The final report must be reviewed, approved, and the Preliminary Plan drawings signed by the State Bridge and Structures Architect, the Bridge Projects Engineer, the Bridge Design Engineer, and the Bridge and Structures Engineer. The TS&L study is submitted with a cover letter to FHWA signed by the Bridge and Structures Engineer.

2.2 Preliminary Plan

The Preliminary Plan preparation stage is the most important phase of bridge design because it is the basis for the final design. The Preliminary Plan should completely define the bridge geometry so the final roadway design by the regions and the structural design by the bridge office can take place with minimal revisions.

During the Region's preparation of the highway design, they also begin work on the bridge site data. Region submits the bridge site data to the Bridge and Structures Office, which initiates the start of the Preliminary Plan stage. Information that must be included as part of the bridge site data submittal is described in Chapter 1110 of the *Design Manual* and Appendix 2.2-A1.

2.2.1 Development of the Preliminary Plan

A. Responsibilities

In general, the responsibilities of the designer, checker, detailer, and unit supervisor are described in Section 1.2.2. The Preliminary Plan Design Engineer or the assigned designer is responsible for developing a preliminary plan for the bridge. The preliminary plan must be compatible with the geometric, aesthetic, staging, geotechnical, hydraulic, financial, structural requirements and conditions at the bridge site.

Upon receipt of the bridge site data from the Region, the designer shall review it for completeness and verify that what the project calls for is realistic and structurally feasible. Any omissions or corrections are to be immediately brought to the Region's attention so that revised site date, if required, can be resubmitted to avoid jeopardizing the bridge design schedule.

The Unit Supervisor shall be kept informed of progress on the preliminary plan so that the schedule can be monitored. If problems develop, the Unit Supervisor can request adjustments to the schedule or allocate additional manpower to meet the schedule. The designer must keep the job file up-to-date by documenting all conversations, meetings, requests, questions, and approvals concerning the project. Notes-to-the-designer, and details not shown in the preliminary plan shall be documented in the job file.

The checker shall provide an independent review of the plan, verifying that it is in compliance with the site data as provided by the region and as corrected in the job file. The plan shall be compared against the Preliminary Plan checklist (see Appendix 2.2-A2) to ensure that all necessary information is shown. The checker is to review the plan for consistency with office design practice, detailing practice, and for constructibility.

The preliminary plan shall be drawn using current office CAD equipment and software by the designer or detailer.

B. Site Reconnaissance

The site data submitted by the Region will include photographs and a video of the site. Even for minor projects, this may not be enough information for the designer to work from to develop a preliminary plan. For most bridge projects, site visits are necessary.

Site visits with Region project staff and other project stakeholders, such as, Materials Laboratory Geotechnical Services Branch, HQ Hydraulics, and Region Design should be arranged with the knowledge and approval of the Bridge Projects Engineer.

C. Coordination

The designer is responsible for coordinating the design and review process throughout the project. This includes seeking input from various WSDOT units and outside agencies. The designer should consult with Materials Laboratory Geotechnical Services Branch, HQ Hydraulics, Bridge Preservation Office, and Region design and maintenance, and other resources for their input.

D. Consideration of Alternatives

In the process of developing the Preliminary Plan, the designer should brainstorm, develop, and evaluate various design alternatives. See Section 2.2.3 General Factors for Consideration and how they apply to a particular site. See also Section 2.1.5A. Preliminary design calculations shall be done to verify feasibility of girder span and spacing, falsework span capacity, geometry issues, and construction clearances. Generally, the number of alternatives will usually be limited to only a few for most projects. For some smaller projects and most major projects, design alternatives merit development and close evaluation. The job file should contain reasons for considering and rejecting design alternatives. This provides documentation for the preferred alternative.

E. Designer Recommendation

The designer should be able to make a recommendation for the preferred alternative after a thorough analysis of the needs and limitations of the site, studying all information, and developing and evaluating the design alternatives for the project. At this stage, the designer should discuss the recommendation with the Bridge Projects Engineer.

F. Concept Approval

For some projects, the presentation, in "E" above, to the Bridge Projects Engineer will satisfy the need for concept approval. Large complex projects, projects of unique design, or projects where two or more alternatives appear viable, should be presented to the Bridge Design Engineer for his/her concurrence before plan development is completed. For unique or complex projects a presentation to the Region Project Engineer, and Bridge and Structures Office Peer Review Committee may be appropriate.

2.2.2 Documentation

A. Job File

An official job file is created by the Bridge Scheduling Engineer when a memo transmitting site data from the region is received by the Bridge and Structures Office. This job file serves as a depository for all communications and resource information for the job. Scheduling and time estimates are kept in this file, as well as cost estimates, preliminary quantities, and documentation of all approvals. Records of important telephone conversations and copies of E-mails approving decisions are also kept in the job file.

After completing the Preliminary Plan, the job file continues to serve as a depository for useful communications and documentation for all pertinent project related information and decisions during the design process through and including preparation of the Final Bridge PS&E.

B. Bridge Site Data

All Preliminary Plans are developed from site data submitted by the Region. This submittal will consist of a memorandum IDC, and appropriate attachments as specified by Chapter 1110 of the *Design Manual*. When this information is received, it should be reviewed for completeness so that missing or incomplete information can be noted and requested.

C. Request for Preliminary Foundation Data

A request for preliminary foundation data is sent to the Geotechnical Services Branch to solicit any foundation data that is available at the preliminary stage. The Materials Laboratory Geotechnical Services Branch is provided with approximate dimensions for the overall structure length and width, approximate number of intermediate piers (if applicable), and approximate stations for beginning and end of structure on the alignment.

Based on test holes from previous construction in the area, geological maps, and soil surveys. The Materials Laboratory Geotechnical Services Branch responds by memo and a report with an analysis of what foundation conditions are likely to be encountered and what foundation types are best suited for the bridge site.

D. Request for Preliminary Hydraulics Data

A Request for preliminary hydraulics data is sent to the HQ Hydraulics Office to document hydraulic requirements that must be considered in the structure design. The HQ Hydraulics Office is provided a contour plan and other bridge site data.

The Hydraulics Office will send a memo providing the following data: seal vent elevations, normal water, 100-year and 500-year flood elevations and flows (Q), pier configuration, scour depth and minimum footing cover required, ice pressure, minimum waterway channel width, riprap requirements, and minimum clearance required to the 100-year flood elevation.

E. Design Report or Design Summary and Value Engineering Studies

Some bridge construction projects have a Design File Report or Design Summary prepared by the region. This is a document, which includes design considerations and conclusions reached in the development of the project. It defines the scope of work for the project. It serves to document the design standards and applicable deviations for the roadway alignment and geometry. It is also an excellent reference for project history, safety and traffic data, environmental concerns, and other information. If a VE study was done on the bridge, the report will identify alternatives that have been studied and why the recommended alternative was chosen.

F. Other Resources

For some projects, preliminary studies or reports will have been prepared. These resources can provide additional background for the development of the Preliminary Plan.

G. Notes of meetings with Regions and other project stakeholders shall be included in the job file.

2.2.3 General Factors for Consideration

Many factors must be considered in preliminary bridge design. Some of the more common of these are listed in general categories below. These factors will be discussed in appropriate detail in subsequent portions of this manual.

A. Site Requirements

Topography
Alignment (tangent, curved, skewed)
Vertical profile and superelevation
Highway Class and design speed
Proposed or existing utilities

B. Safety

Feasibility of falsework (impaired clearance and sight distance, depth requirements, see Section 2.3.10)
Density and speed of traffic
Detours or possible elimination of detours by construction staging
Sight distance
Horizontal clearance to piers
Hazards to pedestrians, bicyclists

C. Economic

Funding classification (federal and state funds, state funds only, local developer funds)
Funding level
Bridge preliminary cost estimate

D. Structural

Limitation on structure depth
Requirements for future widening
Foundation and groundwater conditions
Anticipated settlement
Stage construction
Falsework limitations

E. Environmental

Site conditions (wetlands, environmentally sensitive areas)
EIS requirements
Mitigating measures
Construction access

F. Aesthetic

General appearance
Compatibility with surroundings and adjacent structures
Visual exposure and experience for public

G. Construction

Ease of construction
Falsework clearances and requirements
Erection problems
Hauling difficulties and access to site
Construction season
Time limit for construction

H. Hydraulic

Bridge deck drainage
Stream flow conditions and drift
Passage of flood debris
Scour, effect of pier as an obstruction (shape, width, skew, number of columns)
Bank and pier protection
Consideration of a culvert as an alternate solution
Permit requirements for navigation and stream work limitations

I. Maintenance

Concrete vs. Steel
Expansion joints
Bearings
Deck protective systems
Inspection and Maintenance Access (UBIT clearances) (see Figure 2.3.11-1)

J. Other

Prior commitments made to other agency officials and individuals of the community
Recommendations resulting from preliminary studies

2.2.4 Permits

A. Coast Guard

As outlined in the *Design Manual* M 22-01 Section 1110.04, *Additional Data for Waterway Crossings*, the Bridge and Structures Office is responsible for coordinating and applying for Coast Guard permits for bridges over waterways. The Coast Guard Liaison Engineer in the Bridge Projects Unit of the Bridge and Structures Office handles this.

A determination of whether a bridge project requires a Coast Guard permit is typically determined by Region Environmental during the early scoping phase. This scoping is done before the bridge site data is sent to the Bridge & Structures Design Office/Unit.

The Region Design Engineer should request that the Environmental Coordinator consult with the Coast Guard Liaison Engineer prior to sending the bridge site data if possible.

Generally, tidal-influenced waterways and waterways used for commercial navigation will require Coast Guard permits. See *Design Manual* M22-01, Chapter 240 Environmental Permits and Approvals, or Environmental Procedure Manual M 31-11, Chapter 520.04 Section 9 Permit – Bridge Work in Navigable Waters, or Chapter 500 Environmental Permitting and PS&E, Table 500-1 for additional information or permit needs and procedures.

For all waterway crossings, the Coast Guard Liaison Engineer is required to initial the Preliminary Plan as to whether a Coast Guard permit or exemption is required. This box regarding Coast Guard permit status is located in the center left margin of the plan. If a permit is required, the permit target date will also be noted. The reduced print, signed by the Coast Guard Liaison Engineer, shall be placed in the job file.

The work on developing the permit application should be started before the bridge site data is complete so that it is ready to be sent to the Coast Guard at least eight months prior to the project ad date. The Coast Guard Liaison Engineer should be given a copy of the preliminary plans from which to develop the Coast Guard Application plan sheets, which become part of the permit.

B. Other

All other permits will be the responsibility of the Region (See *Design Manual* Chapter 240). The Bridge and Structures Office may be asked to provide information to the Region to assist them in making applications for these permits.

2.2.5 Preliminary Cost Estimate

A preliminary cost estimate should be developed when the bridge type, foundation type, deck area and adjacent retaining walls are determined. At the preliminary stage the cost estimate is based on square-foot costs taken from the BDM Chapter 12 and adjusted for structure specifics. Consult with a Specifications and Estimates Engineer. The preliminary cost estimate is based on recent bidding history on similar structures, degree of difficulty of construction, inflation trends, and length of time until Ad Date, and time for completion of construction. It is considered accurate to within 15%, but is should be accurate enough to preclude a surprise increase at the time of the Engineer's estimate, which is based on completed design quantities. The preliminary cost estimate shall be updated frequently as changes are made to the preliminary plan or new data influences the costs.

After a Preliminary Plan has been developed, but before sending to the Bridge Design Engineer for signature, the Preliminary Plan and cost estimate shall be submitted to one of the Bridge Specifications and Estimates Engineers for review and comment for the structures in the Preliminary Plan. The information presented to the S&E Engineer shall include the complete Preliminary Plan and all backup data previously prepared on costs for the structures (such as preliminary quantity calculations, preliminary foundation type selection, etc,). The S&E Engineer will review the Preliminary Plan, prepare, sign, and date a cost estimate summary sheet, and return the package to the designer. When the Preliminary Plan is presented to the Bridge Design Engineer, the submittal shall include the summary sheet prepared by the S&E Engineer. The summary sheet and backup data will then be placed in the job file. Do not send the summary sheet to the Region.

After submittal of the Preliminary Plan to the Region, the Region shall be notified immediately of any increases in the preliminary cost estimate during the structural design.

2.2.6 Approvals

A. State Bridge and Structures Architect/Specialists

For all preliminary plans, the State Bridge and Structures Architect and appropriate specialists should be aware and involved when the designer is first developing the plan. The State Bridge and Structures Architect and specialists should be given a print of the plan by the designer. This is done prior to checking the preliminary plan. The State Bridge and Structures Architect and specialist will review, approve, sign and date the print. This signed print is placed in the job file. If there are any revisions, which affect the aesthetics of the approved preliminary plan, the State Bridge and Structures Architect should be asked to review and approve, by signature, a print showing the revisions, which change elements of aesthetic significance.

For large, multiple bridge projects, the State Bridge and Structures Architect should be contacted for development of a coordinated architectural concept for the project corridor.

The architectural concept for a project corridor is generally developed in draft form and reviewed with the project stakeholders prior to finalizing. When finalized, it should be signed by the Region Administrator or his/her designee.

Approval from the State Bridge and Structures Architect is required on all retaining walls and noise wall aesthetics including finishes and materials, and configuration.

In order to achieve superstructure type optimization and detailing consistency, the following guidelines shall be used for the preparation of all future Preliminary Plans:

- Preliminary Plans for all steel bridges and structures shall be reviewed by the Steel Specialist.
- Preliminary Plans for all concrete bridges and structures shall be reviewed by the Concrete Specialist.
- Detailing of all Preliminary Plans shall be reviewed by the Preliminary Plans Detailing Specialist.

These individuals shall signify their approval by signing the preliminary plan in the Architect/ Specialist block on the first plan sheet, together with the State Bridge and Structures Architect.

B. Bridge Design

The Bridge Projects Engineer signs the preliminary plan after it has been checked and approved by the Architect/Specialists. At this point, it is ready for review, approval, and signing by the Bridge Design Engineer and the Bridge and Structures Engineer.

After the Bridge and Structures Engineer has signed the preliminary plan, it is returned to the designer. The designer places the original signed preliminary plan in the job fileand enters the names of the signers in the signature block. This preliminary plan will be sent to region for their review and approval.

The transmittal memo includes the preliminary plan and the WSDOT Form 230-038 "Not Included in Bridge Quantities List" and a brief explanation of the preliminary cost estimate. It is addressed to the Region Administrator/Project Development Engineer from the Bridge and Structures Engineer/Bridge Design Engineer. The memo is reviewed by the Bridge Projects Engineer and is initialed by the Bridge Design Engineer.

The following should be included in the cc distribution list with attachments: FHWA Washington Division Bridge Engineer (when project has Federal Funding), Region Project Engineer, Bridge Projects Engineer, Bridge Design Unit Supervisor, State Geotechnical Engineer, HQ Hydraulics Engineer, Bridge Management Engineer (when it is a replacement) Bridge Preservation Engineer, HQ Bridge Construction Engineer, and Region Traffic Engineer (when ITS is required). The Bridge Scheduling Engineer and the Region and HQ Program Management Engineers should receive a copy of the preliminary plan distribution memo without the attachments.

C. Region

Prior to the completion of the preliminary plan, the designer should meet with the Region to discuss the concept, review the list of items to be included in the "Not Included in Bridge Quantities List" and get their input. (This is a list of non-bridge items that appear on the bridge preliminary plan and eventually on the design plans.)

The Region will review the preliminary plan for compliance and agreement with the original site data. They will work to answer any *"Notes to the Region"* that have been listed on the plan. When this review is complete, the Regional Administrator, or his/her designee, will sign the plan. The Region will send back a print of the signed plan with any comments noted in red (additions) and green (deletions) along with responses to the questions raised in the *"Notes to the Region"*.

D. Railroad

When a railroad is involved with a structure on a Preliminary Plan, the HQ RR Liaison Engineer of the Design Office must be involved during the plan preparation process. A copy of the Preliminary Plan is sent to the HQ RR Liaison Engineer, who then sends a copy to the railroad involved for their comments and approval.

The railroad will respond with approval by letter to the HQ RR Liaison Engineer. A copy of this letter is then routed to the Bridge and Structures Office and then placed in the job file.

For design plans prepared within the Bridge and Structures Office, the Unit Supervisor or lead designer will be responsible for coordinating and providing shoring plans for structures adjacent to railroads. It is recommended that the Construction Support Unit design, prepare, stamp, and sign shoring plans. However, the design unit may elect to design, prepare, stamp, and sign shoring plans.

For consultant prepared design plans, the Unit Supervisor or lead reviewer will be responsible for coordinating and having the consultant design shoring plans for structures adjacent to railroads. The Construction Support Unit has design criteria and sample plan details which can be used by the design units and consultants.

A Construction Support engineer is available to attend design project kick-off meetings if there is a need for railroad shoring plans or other constructability issues associated with the project. Regardless of who prepares the bridge plans, all shoring plans should be reviewed by the Construction Support Unit before they are submitted for railroad review and approval at the 50% Final PS&E stage.

For completed shelf projects, the S&E Engineer will contact the Region Project Engineer and inform the Unit Supervisor or lead reviewer on the need for shoring plans for structures adjacent to railroads. If shoring plans are required, the unit supervisor or lead designer may ask the Construction Support Unit to prepare shoring plans.

At the 50% PS&E plan completion stage or sooner if possible, especially for seismic retrofit project, the S&E Engineer will send four (4) copies of the layout, foundation plan, temporary shoring plans, and appropriate special provision section for structures adjacent to railroads to the HQ RR Liaison Engineer, who will submit this package to the appropriate railroad for review and approval. The shoring plans shall show the pressure loading diagram and calculations to expedite the railroad's review and approval.

2.3 Preliminary Plan Criteria

2.3.1 Highway Crossings

A. General

A highway crossing is defined as a grade separation between two intersecting roadways. Naming convention varies slightly between mainline highway crossings and ramp highway crossings, but essentially, all bridges carry one highway, road, or street over the intersecting highway, road, or street.

1. Mainline highway crossings

   Names for mainline highway crossings are defined by the route designation or name of state highway, county road, or city street being carried over another highway, road, or street.

   For example, a bridge included as part of an interchange involving I-205 and SR 14 and providing for passage of traffic on I-205 under SR 14 would be named SR 14 Over I-182 (followed by the bridge number).

2. Ramp highway crossings

   Names for ramp highway crossings are defined by the state highway route numbers being connected, the directions of travel being connected, and the designation or name of the highway, road, or street being bridged.

   For example, a bridge in the Hewitt Avenue Interchange connecting traffic from westbound US 2 to northbound I-5 and passing over Everett Street would be named 2W-5N Ramp Over Everett Street (followed by the bridge number). A bridge connecting traffic from northbound I-5 to westbound SR 518 and passing over northbound I-405 and a ramp connecting southbound I-405 to northbound I-5 would be named 5N-518W Over 405N,405S-5N (followed by the bridge number).

B. Bridge Width

The bridge roadway channelization (configuration of lanes and shoulders) is provided by the region with the Bridge Site Data. For state highways, the roadway geometrics are controlled by Chapters 430 and 440 of the *Design Manual*. For city and county arterials, the roadway geometrics are controlled by Chapter IV of the *Local Agency Guidelines*.

C. Horizontal Clearances

Safety dictates that fixed objects be placed as far from the edge of the roadway as is economically feasible. Criteria for minimum horizontal clearances to bridge piers and retaining walls are outlined in the *Design Manual*. Chapter 700 of the *Design Manual* outlines clear zone and recovery area requirements for horizontal clearances without guardrail or barrier being required.

Actual horizontal clearances shall be shown in the plan view of the Preliminary Plan (to the nearest 0.1 foot). Minimum horizontal clearances to inclined columns or wall surfaces should be provided at the roadway surface and for a vertical distance of 6 feet above the edge of pavement. When bridge end slopes fall within the recovery area, the minimum horizontal clearance should be provided for a vertical distance of 6 feet above the fill surface. See Figure 2.3.1-1.

Bridge piers and abutments ideally should be placed such that the minimum clearances can be satisfied. However, if for structural or economic reasons, the best span arrangement requires a pier to be within clear zone or recovery area, and then guardrail or barrier can be used to mitigate the hazard.

There are instances where it may not be possible to provide the minimum horizontal clearance even with guardrail or barrier. An example would be placement of a bridge pier in a narrow median. The required column size may be such that it would infringe on the shoulder of the roadway. In such cases, the barrier safety shape would be incorporated into the shape of the column. Barrier or guardrail would need to taper into the pier at a flare rate satisfying the criteria in Chapter 710 of the *Design Manual*. See Figure 2.3.1-2. The reduced clearance to the pier would need to be approved by the Region. Horizontal clearances, reduced temporarily for construction, are covered in Section 2.3.9.

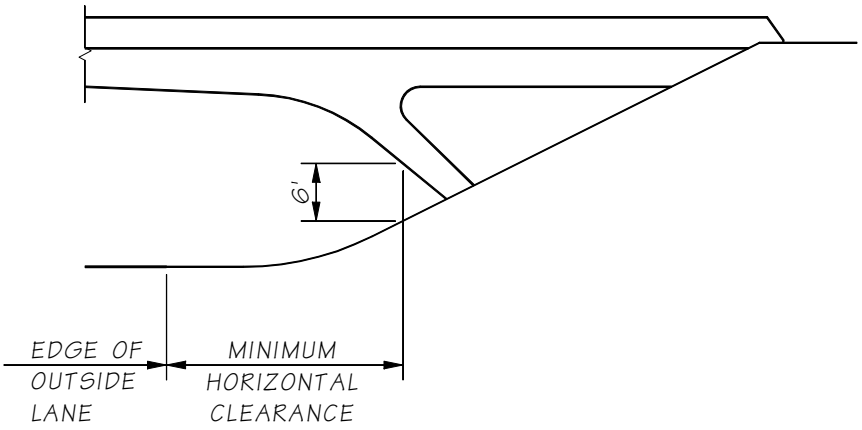

Horizontal Clearance to Incline Piers
Figure 2.3.1-1

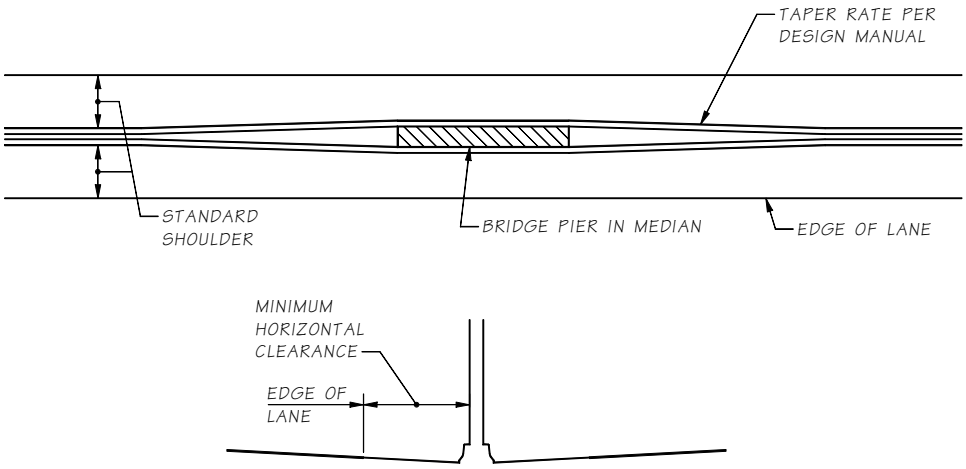

Bridge Pier in Narrow Median
Figure 2.3.1-2

D. Vertical Clearances

The required minimum vertical clearances are established by the functional classification of the highway and the construction classification of the project. For state highways, this is as outlined in Chapters 430, 440, and 1120 of the *Design Manual*. For city and county arterials, this is as outlined in Chapter IV of the Local Agency Guidelines.

Actual minimum vertical clearances are shown on the Preliminary Plan (to the nearest 0.1 foot). The approximate location of the minimum vertical clearance is noted in the upper left margin of the plan. For structures crossing divided highways, minimum vertical clearances for both directions are noted.

E. End Slopes

The type and rate of end slope used at bridge sites is dependent on several factors. Soil conditions and stability, right of way availability, fill height or depth of cut, roadway alignment and functional classification, and existing site conditions are important.

The region should have made a preliminary determination based on these factors during the preparation of the bridge site data. The side slopes noted on the Roadway Section for the roadway should indicate the type and rate of end slope.

The Materials Laboratory Geotechnical Services Branch will recommend the minimum rate of end slope. This should be compared to the rate recommended in the Roadway Section and to existing site conditions (if applicable). The types of end slopes and bridge slope protection are discussed in Chapters 640 and 1120 of the *Design Manual*. Examples of slope protection are shown on *Standard Plan* D-9.

F. Determination of Bridge Length

Establishing the location of the end piers for a highway crossing is a function of the profile grade of the overcrossing roadway, the superstructure depth, the minimum vertical and horizontal clearances required for the structure, the profile grade and channelization (including future widening) of the undercrossing roadway, and the type and rate of end slope used.

For the general case of bridges in cut or fill slopes, the control point is where the cut or fill slope plane meets the bottom of roadside ditch or edge of shoulder as applicable. From this point, the fill or cut slope plane is established at the recommended rate up to where the slope plane intersects the grade of the roadway at the shoulder. Following the requirements of Standard Plan H-9, the back of pavement seat, end of wing wall or end of retaining wall can be established at 3 feet behind the slope intersection. See Figure 2.3.1-3

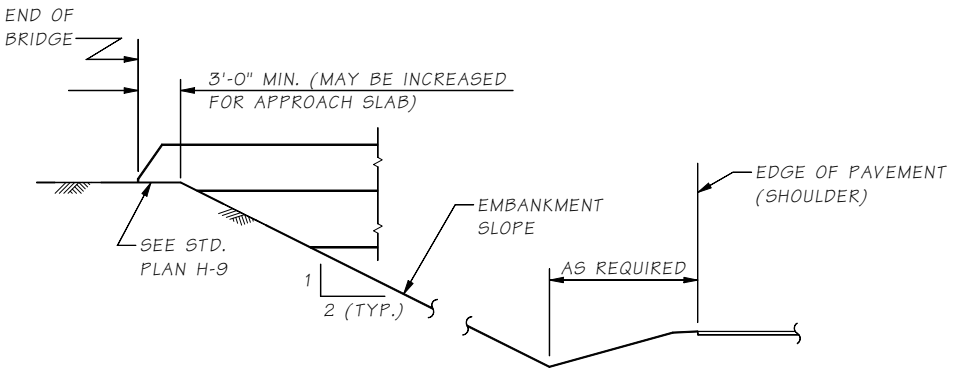

Determination of Bridge Length
Figure 2.3.1-3

For the general case of bridges on wall type abutments or "closed" abutments, the controlling factors are the required horizontal clearance and the size of the abutment. This situation would most likely occur in an urban setting or where right of way or span length is limited.

G. Pedestrian Crossings

Pedestrian crossings follow the same format as highway crossings. Geometric criteria for bicycle and pedestrian facilities are established in Chapters 1020 and 1025 of the *Design Manual*. Width and clearances would be as established there and as confirmed by region. Minimum vertical clearance over a roadway is given in Chapter 1025 and 1120 of the *Design Manual*. Unique items to be addressed with pedestrian facilities include ADA requirements, the railing to be used, handrail requirements, overhead enclosure requirements, and profile grade requirements for ramps and stairs.

H. Bridge Redundancy

Design bridges to minimize the risk of catastrophic collapse by using redundant supporting elements (columns and girders).

For substructure design use:

One column minimum for roadways 40 feet wide and under. Two columns minimum for roadways over 40 feet to 60 feet. Three columns minimum for roadways over 60 feet. Collision protection or design for collision loads for piers with one or two columns.

For superstructure design use:

Three girders (webs) minimum for roadways 32 feet and under. Four girders (webs) minimum for roadways over 32 feet. See Appendix 2.3-A2 for details.

Note: Any deviation from the above guidelines shall have a written approval by the Bridge Design Engineer.

2.3.2 Railroad Crossings

A. General

A railroad crossing is defined as a grade separation between an intersecting highway and a railroad. Names for railroad crossings are defined either as railroad over state highway or state highway over railroad. For example, a bridge carrying BNSF railroad tracks over I-5 would be named BNSF Over I-5 (followed by the bridge number) A bridge carrying I-90 over Union Pacific railroad tracks would be named I-90 Over UPRR (followed by the bridge number).

Requirements for highway/railway grade separations may involve negotiations with the railroad company concerning clearances, geometrics, utilities, and maintenance roads. The railroad's review and approval will be based on the completed Preliminary Plan.

B. Criteria

The initial Preliminary Plan shall be prepared in accordance with the criteria of this section to apply uniformly to all railroads. Variance from these criteria will be negotiated with the railroad, when necessary, after a Preliminary Plan has been provided for their review.

C. Bridge Width

For highway over railway grade separations the provisions of Section 2.3.1 pertaining to bridge width of highway crossings shall apply. Details for railway over highway grade separations will depend on the specific project and the railroad involved.

D. Horizontal Clearances

For railway over highway grade separations, undercrossings, the provisions of Section 2.3.1 pertaining to horizontal clearances for highway crossings shall apply. However, because of the heavy live loading of railroad spans, it is advantageous to reduce the span lengths as much as possible. For railroad undercrossings skewed to the roadway, piers may be placed up to the outside edge of standard shoulders (or 8 feet minimum) if certain conditions are met (known future roadway width requirements, structural requirements, satisfactory aesthetics, satisfactory sight distance, barrier protection requirements, etc.).

For railroad overcrossings, minimum horizontal clearances are as noted below:

	Railroad Alone
Fill Section	14 feet
Cut Section	16 feet

Horizontal clearance shall be measured from the center of the outside track to the face of pier. When the track is on a curve, the minimum horizontal clearance shall be increased at the rate of 1½ inches for each degree of curvature. An additional 8 feet of clearance for off-track equipment shall only be provided when specifically requested by the railroad.

The actual minimum horizontal clearances shall be shown in the Plan view of the Preliminary Plan (to the nearest 0.01 foot).

E. Crash Walls

Crash walls, when required, shall be designed to conform to the criteria of the *AREMA Manual*. To determine when crash walls are required, consult the following:

Union Pacific Railroad, “Guidelines for Design of Highway Separation Structures over Railroad (Overhead Grade Separation)” AREMA Manual WSDOT Railroad Liaison Engineer the Railroad

F. Vertical Clearances

For railway over highway grade separations, the provisions of Section 2.3.1 pertaining to vertical clearances of highway crossings shall apply. For highway over railway grade separations, the minimum vertical clearance shall satisfy the requirements of Chapter 1120 of the *Design Manual*.

The actual minimum vertical clearances shall be shown on the Preliminary Plan (to the nearest 0.1 foot). The approximate location of the minimum vertical clearance is noted in the upper left margin of the plan.

G. Determination of Bridge Length

For railway over highway grade separations, the provisions of Section 2.3.1 pertaining to the determination of bridge length shall apply. For highway over railway grade separations, the minimum bridge length shall satisfy the minimum horizontal clearance requirements. The minimum bridge length shall generally satisfy the requirements of Figure 2.3.2-1.

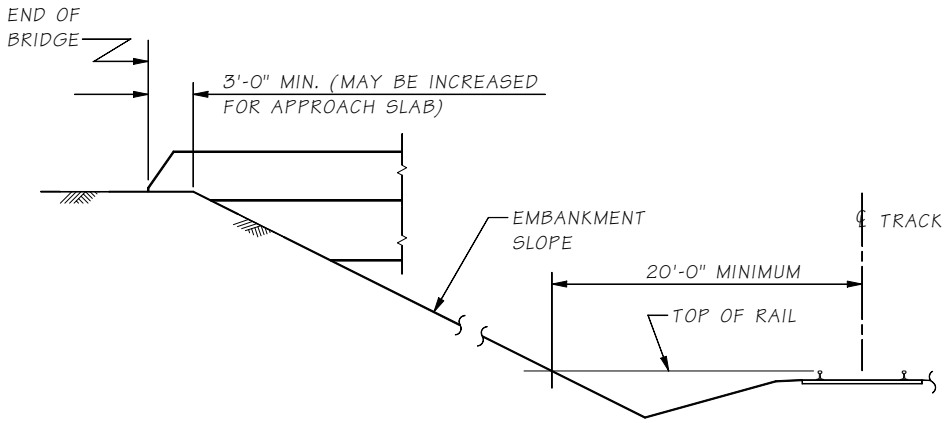

Determination of Bridge Length for for a Highway Over Railway Grade Separation
Figure 2.3.2-1

H. Special Considerations

For highway over railway grade separations, the top of footings for bridge piers or retaining walls adjacent to railroad tracks shall be 2 feet or more below the elevation of the top of tie and shall not have less than 2 feet of cover from the finished ground. The footing face shall not be closer than 10 feet to the center of the track. Any cofferdams, footings, excavation, etc., encroaching within 10 feet of the center of the track requires the approval of the railroad.

I. Construction Openings

For railroad clearances, see Section 1120 of the WSDOT *Design Manual*. The minimum horizontal construction opening is 9 feet to either side of the centerline of track. The minimum vertical construction opening is 23 feet 6 inches above the top of rail at 6 feet offset from the centerline of track. Falsework openings shall be checked to verify that enough space is available for falsework beams to span the required horizontal distances and still provide the minimum vertical falsework clearance. Minimum vertical openings of less than 23 feet 6 inches shall be coordinated with the HQ Railroad Liaison Engineer.

2.3.3 Water Crossings

A. Bridge Width

The provisions of Section 2.3.1 pertaining to bridge width for highway crossings apply here.

B. Horizontal Clearances

Water crossings over navigable waters requiring clearance for navigation channels shall satisfy the horizontal clearances required by the Coast Guard. Communication with the Coast Guard will be handled through the Coast Guard Liaison Engineer. For bridges over navigable waters, the centerline of the navigation channel and the horizontal clearances (to the nearest 0.1 foot) to the piers or the pier protection shall be shown on the Plan view of the Preliminary Plan. Pier locations shall be reviewed by the HQ Hydraulics unit.

C. Vertical Clearances

Vertical clearances for water crossings must satisfy floodway clearance and, where applicable, navigation clearance.

Bridges over navigable waters must satisfy the vertical clearances required by the Coast Guard. Communication with the Coast Guard will be handled through the Coast Guard Liaison Engineer. The actual minimum vertical clearance (to the nearest 0.1 foot) for the channel span shall be shown on the Preliminary Plan. The approximate location of the minimum vertical clearance shall be noted in the upper left margin of the plan. The clearance shall be shown to the water surface as required by the Coast Guard criteria.

Floodway vertical clearance will need to be discussed with the HQ Hydraulics Office. In accordance with the flood history, nature of the site, character of drift, and other factors, they will determine a minimum vertical clearance for the 100-year flood. The roadway profile and the bridge superstructure depth must accommodate this. The actual minimum vertical clearance to the 100-year flood shall be shown (to the nearest 0.1 foot) on the Preliminary Plan, and the approximate location of the minimum vertical clearance shall be noted in the upper left margin of the plan.

D. End Slopes

The type and rate of end slopes for water crossings is similar to that for highway crossings. Soil conditions and stability, fill height, location of toe of fill, existing channel conditions, flood and scour potential, and environmental concerns are all important.

As with highway crossings, the Region, and Materials Laboratory Geotechnical Services Branch will make preliminary recommendations as to the type and rate of end slope. The HQ Hydraulics Office will also review the Region's recommendation for slope protection.

E. Determination of Bridge Length

Determining the overall length of a water crossing is not as simple and straightforward as for a highway crossing. Floodway requirements and environmental factors have a significant impact on where piers and fill can be placed.

If a water crossing is required to satisfy floodway and environmental concerns, it will be known by the time the Preliminary Plan has been started. Environmental studies and the Design Report prepared by the region will document any restrictions on fill placement, pier arrangement, and overall floodway clearance. The Hydraulics Office will need to review the size, shape, and alignment of all bridge piers in the floodway and the subsequent effect they will have on the base flood elevation. The overall bridge length may need to be increased depending on the span arrangement selected and the change in the flood backwater, or justification will need to be documented.

F. Scour

The HQ Hydraulics Office will indicate the anticipated depth of scour at the bridge piers. They will recommend pier shapes to best streamline flow and reduce the scour forces. They will also recommend measures to protect the piers from scour activity or accumulation of drift (use of deep foundations, minimum cover to top of footing, riprap, pier alignment to stream flow, closure walls between pier columns, etc.).

G. Pier Protection

For bridges over navigable channels, piers adjacent to the channel may require pier protection such as fenders or pile dolphins. The Coast Guard will determine whether pier protection is required. This determination is based on the horizontal clearance provided for the navigation channel and the type of navigation traffic using the channel.

H. Construction Access and Time Restrictions

Water crossings will typically have some sort of construction restrictions associated with them. These must be considered during preliminary plan preparation.

The time period that the Contractor will be allowed to do work within the waterway may be restricted by regulations administered by various agencies. Depending on the time limitations, a bridge with fewer piers or faster pier construction may be more advantageous even if more expensive.

Contractor access to the water may also be restricted. Shore areas supporting certain plant species are sometimes classified as wetlands. A work trestle may be necessary in order to work in or gain access through such areas. Work trestles may also be necessary for bridge removal as well as new bridge construction. Work trestle feasibility, location, staging, deck area and approximate number of piles, and estimated cost need to be determined to inform the Region as part of the bridge preliminary plan.

2.3.4 Bridge Widenings

A. Bridge Width

The provisions of Section 2.3.1 pertaining to bridge width for highway crossings shall apply. In most cases, the width to be provided by the widening will be what is called for by the design standards, unless a deviation is approved.

B. Traffic Restrictions

Bridge widenings involve traffic restrictions on the widened bridge and, if applicable, on the lanes below the bridge. The bridge site data submitted by the region should contain information regarding temporary lane widths and staging configurations. This information should be checked to be certain that the existing bridge width, and the bridge roadway width during the intermediate construction stages of the bridge are sufficient for the lane widths, shy distances, temporary barriers, and construction room for the contractor. These temporary lane widths and shy distances are noted on the Preliminary Plan. The temporary lane widths and shy distances on the roadway beneath the bridge being widened should also be checked to ensure adequate clearance is available for any substructure construction.

C. Construction Sequence

A construction sequence shall be developed using the traffic restriction data in the bridge site data. The construction sequence shall take into account the necessary steps for construction of the bridge widening including both the substructure and superstructure. Placement of equipment is critical because of limited access and working space limitations. Space is required for cranes to construct shafts and erect the girders. Consult the Construction Support Unit for crane information, such as: boom angle, capacities, working loads, working radius, and crane footprint. Construction work off of and adjacent to the structure and the requirements of traffic flow on and below the structure shall be taken into account. Generally, cranes are not allowed to lift loads while supported from the existing structure. Checks shall be made to be certain that girder spacing, closure pours, and removal work are all compatible with the traffic arrangements.

Projects with several bridges being widened at the same time should have sequencing that is compatible with the Region's traffic plans during construction and that allow the Contractor room to work. It is important to meet with the Region project staff to assure that the construction staging and channelization of traffic during construction is feasible and minimizes impact to the traveling public.

2.3.5 Detour Structures

A. Bridge Width

The lane widths, shy distances, and overall roadway widths for detour structures are determined by the Region. Review and approval of detour roadway widths is done by the HQ Traffic Office.

B. Live Load

All detour structures shall be designed for 75% of HL 93 live load unless approved otherwise by the Bridge Design Engineer. Construction requirements, such as a year long expected use, and staging are sufficient reasons to justify designing for a higher live load of HL-93. Use of an HL 93 live load shall be approved by the Bridge Design Engineer.

2.3.6 Retaining Walls and Noise Walls

The requirements for Preliminary Plans for retaining walls and noise walls are similar to the requirements for bridges. The plan and elevation views define the overall limits and the geometry of the wall. The section view will show general structural elements that are part of the wall and the surface finish of the wall face.

The most common types of walls are outlined in Chapter 8 of the *Bridge Design Manual* and Chapter 1130 of the *Design Manual*. The Bridge and Structures Office is responsible for Preliminary Plans for all nonstandard walls (retaining walls and noise walls) as spelled out in Chapter 1130 of the *Design Manual*.

2.3.7 Bridge Deck Drainage

The HQ Hydraulics Office provides a review of the Preliminary Plan with respect to the requirements for bridge deck drainage. An 11x17 print shall be provided to the HQ Hydraulics Office for their review as soon as the Preliminary Plan has been developed. The length and width of the structure, profile grade, superelevation diagram, and any other pertinent information (such as locations of drainage off the structure) should be shown on the plan. For work with existing structures, the locations of any and all bridge drains shall be noted.

The HQ Hydraulics Office or the Region Hydraulics staff will determine the type of drains necessary (if any), the location, and spacing requirements. They will furnish any details or modifications required for special drains or special situations.

If low points of sag vertical curves or superelevation crossovers occur within the limits of the bridge, the region should be asked to revise their geometrics to place these features outside the limits of the bridge. If such revisions cannot be made, the HQ Hydraulics Office will provide details to handle drainage with bridge drains on the structure.

2.3.8 Bridge Deck Protective Systems

The Preliminary Plan shall note in the lower left margin the type of deck protective system to be utilized on the bridge. The most commonly used systems are described in Section 5.7.4 of the *Bridge Design Manual*.

New construction will generally be System 1 (2½ inch concrete top cover plus epoxy-coated rebars for the top mat). System 2 (MC overlay) and System 3 (HMA overlay) are to be used on new construction that require overlays and on widenings for major structures. The type of overlay to be used should be noted in the bridge site data submitted by the Region. The bridge condition report will indicate the preference of the Deck Systems Specialist in the Bridge and Structures Office.

2.3.9 Construction Clearances

Most projects involve construction in and around traffic. Both traffic and construction must be accommodated. Construction clearances and working room must be reviewed at the preliminary plan stage to verify bridge constructability.

For construction clearances for roadways, the Region shall supply the necessary traffic staging information with the bridge site data. This includes temporary lane widths and shoulder or shy distances, allowable or necessary alignment shifts, and any special minimum vertical clearances. With this information, the designer can establish the falsework opening or construction opening.

The horizontal dimension of the falsework or construction opening shall be measured normal to the alignment of the road which the falsework spans. The horizontal dimension of the falsework or construction opening shall be the sum of the temporary traffic lane widths and shoulder or shy distances, plus two 2-foot widths for the temporary concrete barriers, plus additional 2 feet shy distances behind the temporary barriers. For multi-span falsework openings, a minimum of 2 feet, and preferably 4 feet, shall be used for the interior support width. This interior support shall also have 2 feet shy on both sides to the two 2-foot wide temporary concrete barriers that will flank the interior support.

The minimum vertical clearance of the construction opening shall normally be 16 feet 6 inches or as specified by the Region. The vertical space available for the falsework must be deep to accommodate the falsework stringers, camber strips, deck, and all deflections. If the necessary depth is greater than the space available, either the minimum vertical clearance for the falsework shall be reduced or the horizontal clearance and span for the falsework shall be reduced, or the profile grade of the structure shall be raised. Any of these alternatives shall be approved by the Region.

Once the construction clearances have been determined the designer should meet with the region to review the construction clearances to ensure compatibility with the construction staging. This review should take place prior to finalizing the preliminary bridge plan.

For railroads see Section 2.3.2H.

2.3.10 Design Guides for Falsework Depth Requirements

Where falsework is required to support construction of cast-in-place superstructure or segmental elements, the designer of the Preliminary Plan shall confirm with the Region the minimum construction opening. See Section 2.3.9

The bridge designer shall consult with the Construction Support Engineer on falsework depth requirements outlined below.

Bridge designers shall evaluate falsework depth requirements based on the following guidelines:

A. Falsework Spans < 36 feet and No Skews

   No design is necessary. Provide for minimum vertical clearance and a minimum falsework depth of 4 feet to accommodate:

   W36X___ steel beam sections
   ¾-inch camber strip
   ⅝-inch plywood
   4x4 joists
   6-inch depth for segmental falsework release

B. Falsework Spans > 36 feet or Spans with Skews or Limited Falsework Depth

While the falsework or construction openings are measured normal to the alignment which the falsework spans, the falsework span is measured parallel to the bridge alignment.

The Preliminary Plan designer shall perform preliminary design of the falsework sufficiently to determine its geometric and structural feasibility. Shallow, heavy, close-spaced wide-flange steel beams may be required to meet the span requirements within the available depth. The preliminary design shall be based on design guides in the Standard Specifications 6-02.3(17). Beams shall be designed parallel to the longitudinal axis of the bridge. The falsework span deflection shall be limited according to the Standard Specifications 6-02.3(17)B: generally span/360 for a single concrete placement, such as a slab, and span/500 for successive concrete placement forming a composite structure. This limits the stresses in the new structure from the construction and concrete placement sequences. Beam sizes shall be shown in the final plans (and in the Preliminary Plans as required) with the Contractor having the option of submitting an alternate design. The designer shall verify availability of the beam sizes shown in the plans.

C. Bridge Widenings

For bridge widenings where the available depth for the falsework is fixed, designers shall design falsework using shallower and heavier steel beams to fit within the available depth. Beam sizes and details shall be shown in the final plans (and in the Preliminary Plans as required) with the Contractor having the option of using an alternate design. The designer shall verify availability of the beam sizes shown in the plans.

In some cases it may be appropriate to consider a shallower superstructure widening, but with similar stiffness, in order to accommodate the falsework and vertical clearance.

D. Bridge with Skews

Falsework beams shall be laid out and designed for spans parallel to the bridge centerline or perpendicular to the main axis of bending. The centerline of falsework beams shall be located within 2 feet of the bridge girder stems and preferably directly under the stems or webs in accordance with Standard Specification Section 6-02.3(17)E. Falsework beams placed normal to the skew or splayed complicate camber calculations and shall be avoided.

2.3.11 Inspection and Maintenance Access

A. General

FHWA mandates that bridges be inspected every two years. The BPO inspectors are required to access bridge components to within 3 feet for visual inspection and to access bearings close enough to measure movement. Maintenance personnel need to access damaged members and locations that may collect debris. This is accomplished by using many methods. Safety cables, ladders, bucket trucks, Under Bridge Inspection Truck (UBIT), (see Figure 2.3.11-1), and under bridge travelers are just a few of the most common methods. Preliminary Plan designers need to be aware of these requirements and prepare designs that allow access for bridge inspectors and maintenance personnel throughout the Preliminary Plan and TS&L planning phases.

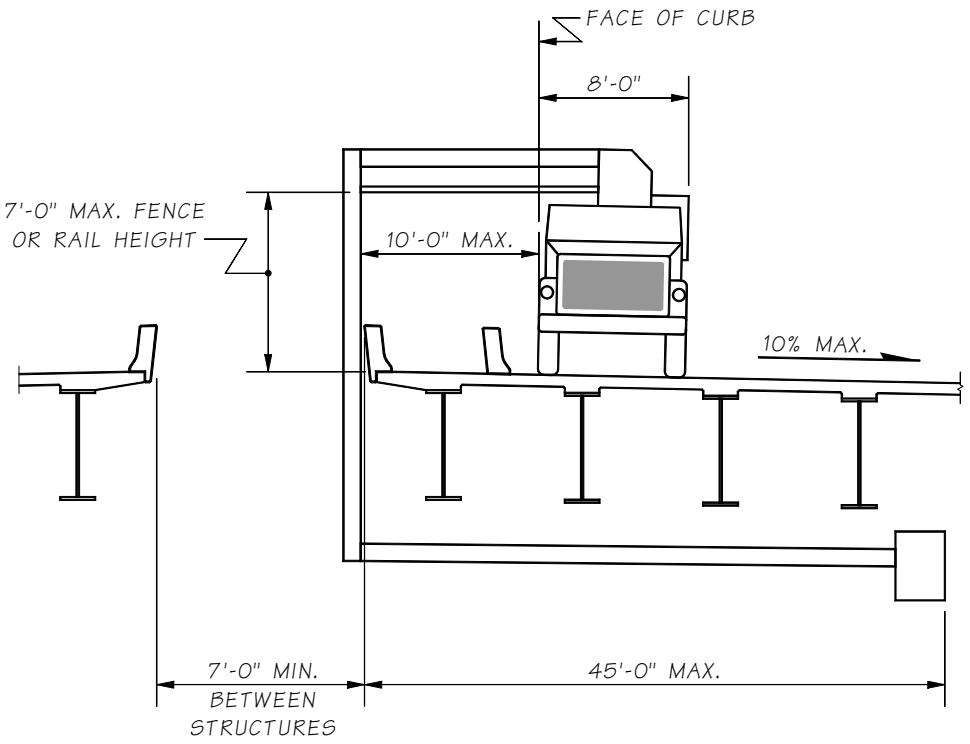

Limits of Under Bridge Inspection Truck
Figure 2.3.11-1

B. Safety Cables

Safety cables strung on steel plate girders or trusses allow for walking access. Care must be given to the application and location. Built-up plate girder bridges are detailed with a safety cable for inspectors walking the bottom flange. However, when the girders become more than 8 feet deep, the inspection of the top flange and top lateral connections becomes difficult to access. It is not feasible for the inspectors to stand on the bottom flanges when the girders are less than 5 feet deep. On large trusses, large gusset plates (3 feet or more wide) are difficult to circumvent. Tie-off cables are best located on the interior side of the exterior girder of the bridge except at large gusset plates. At these locations, cables or lanyard anchors should be placed on the inside face of the truss so inspectors can utilize bottom lateral gusset plates to stand on while traversing around the main truss gusset plates.

C. Travelers

Under bridge travelers, placed on rails that remain permanently on the bridge, can be considered on large steel structures. This is an expensive option, but it should be evaluated for large bridges with high ADT because access to the bridge would be limited by traffic windows that specify when a lane can be closed. Some bridges are restricted to weekend UBIT inspection for this reason.

D. Abutment Slopes

Slopes in front of abutments shall provide enough overhead clearance to the bottom of the superstructure to access bearings for inspection and possible replacement (usually 3 feet minimum).

2.4 Selection of Structure Type

2.4.1 Bridge Types

See Appendix sheet 2.4-A1 for a bar graph comparing structure type, span range and cost range.

The required superstructure depth is determined during the preliminary plan development process. The AASHTO LRFD Specifications in Table 2.5.2.6.3 show traditional minimum depths for constant depth superstructures. WSDOT has developed superstructure depth-to-span ratios based on past experience.

The AASHTO LRFD Specifications, Section 2.5.2.6.1, states that it is optional to check deflection criteria, except in a few specific cases. The WSDOT criteria is to check the live load deflection for all structures as specified in AASHTO LRFD Specifications, Section 3.6.1.3.2 and 2.5.2.6.2.

The superstructure depth is used to establish the vertical clearance that is available below the superstructure. For preliminary plans, the designer should use the more conservative depth determined from either the AASHTO LRFD criteria or the WSDOT criteria outlined below. In either case, the minimum depth includes the deck thickness. For both simple and continuous spans, the span length is the horizontal distance between centerlines of bearings.

The superstructure depth may be refined during the final design phase. It is assumed that any refinement will result in a reduced superstructure depth so the vertical clearance is not reduced from that shown in the preliminary plan. However, when profile grade limitations restrict superstructure depth, the preliminary plan designer shall investigate and/or work with the structural designer to determine a superstructure type and depth that will fit the requirements.

A. Reinforced Concrete Slab

1. Application

   Used for simple and continuous spans up to 60 feet.

2. Characteristics

   Design details and falsework relatively simple. Shortest construction time for any cast-in-place structure. Correction for anticipated falsework settlement must be included in the dead load camber curve because of the single concrete placement sequence.

3. Depth/Span Ratios

   a. Constant depth

      Simple span $1/22$
      Continuous spans $1/25$

   b. Variable depth

      Adjust ratios to account for change in relative stiffness of positive and negative moment sections.

B. Reinforced Concrete Tee-Beam

1. Application

   This type of Super Structure is not recommended for new bridges. It could only be used for bridge widening and bridges with tight curvature or unusual geometry.

   Used for continuous spans 30 feet to 60 feet. Has been used for longer spans with inclined leg piers.

2. Characteristics

   Forming and falsework is more complicated than for a concrete slab. Construction time is longer than for a concrete slab.

3. Depth/Span Ratios

   a. Constant depth

Simple spans	$^1/_{13}$
Continuous spans	$^1/_{15}$

   b. Variable depth

      Adjust ratios to account for change in relative stiffness of positive and negative moment sections.

C. Reinforced Concrete Box Girder

WSDOT restricts the use of Cast-in-place reinforced concrete box girder for bridge superstructure. This type of superstructure may only be used for bridges with tight curvatures or irregular geometry upon Bridge Engineer's approval.

1. Application

   This type of Super Structure is not recommended for new bridges. It could only be used for bridge widening and bridges with tight curvature or unusual geometry.

   Used for continuous spans 50 feet to 120 feet. Maximum simple span 100 feet to limit excessive dead load deflections.

2. Characteristics

   Forming and falsework is somewhat complicated. Construction time is approximately the same as for a tee-beam. High torsional resistance makes it desirable for curved alignments.

3. Depth/Span Ratios*

   a. Constant depth

Simple spans	$^1/_{18}$
Continuous spans	$^1/_{20}$

   b. Variable depth

      Adjust ratios to account for change in relative stiffness of positive and negative moment sections.

      *If the configuration of the exterior web is sloped and curved, a larger depth/span ratio may be necessary.

D. Post-Tensioned Concrete Box Girder

1. Application

   Normally used for continuous spans longer than 120 feet or simple spans longer than 100 feet. Should be considered for shorter spans if a shallower structure depth is needed.

2. Characteristics

   Construction time is somewhat longer due to post-tensioning operations. High torsional resistance makes it desirable for curved alignments.

3. Depth/Span Ratios*

   a. Constant depth

Simple spans	$1/20.5$
Continuous spans	$1/25$

   b. Variable depth

   Two span structures

At Center of span	$1/25$
At Intermediate pier	$1/12.5$
Multi-span structures	
At Center of span	$1/36$
At Intermediate pier	$1/18$

   *If the configuration of the exterior web is sloped and curved, a larger depth/span ratio may be necessary.

E. Prestressed Concrete Sections

1. Application

   Local precast fabricators have several standard forms available for precast concrete sections based on the WSDOT standard girder series. These are versatile enough to cover a wide variety of span lengths.

   WSDOT standard girders are:

   a. WF95G, WF83G, WF74G, WF58G, WF50G, WF42G, W74G, W58G, W50G, and W42G precast, prestressed concrete I-girders requiring a cast-in-place concrete roadway deck used for spans less than 200 feet. The number (eg. 95) specifies the girder depth in inches.

      WF95PTG, WF83PTG and WF74PTG post-tensioned, precast segmental I–girders with cast–in–place concrete roadway deck use for simple span up to 230 feet, and continuous span up to 250 feet with continuous post-tensioning over the intermediate piers.

   b. U**G* and UF**G* precast, prestressed concrete tub girders requiring a cast–in–place concrete roadway deck are used for spans less than 140 feet. “U” specifies webs without flanges, “UF” specifies webs with flanges, ** specifies the girder depth in inches, and * specifies the bottom flange width in feet. U**G* girders have been precast as shallow as 26 inches.

      Post-tensioned, precast, prestressed tub girders with cast–in–place concrete roadway deck are used for simple span up to 160 feet. and continuous span up to 200 feet.

c. W65DG, W53DG, W41DG, and W35DG precast, prestressed concrete decked bulb tee girders requiring an HMA overlay roadway surface used for span less than 150 feet, with the Average Daily Truck (ADT) limitation of 30,000 or less.

d. W62BTG, W50BTG, W38BT6, and W32BTG precast, prestressed concrete bulb tee girders requiring a cast-in-place concrete deck for simple spans up to 120 feet.

e. 12-inch, 18-inch, and 26-inch precast, prestressed slabs requiring 5 inch minimum cast-in-place slab used for spans less than 90 feet.

f. 26-inch precast, prestressed ribbed girder, deck double tee, used for span less than 60 feet, and double tee members requiring an HMA overlay roadway surface used for span less than 40 feet.

2. Characteristics

Superstructure design is quick for pretensioned girders with proven user-friendly software (PGSuper, PGSplice, and QConBridge)

Construction details and forming are fairly simple. Construction time is less than for a cast-in-place bridge. Little or no falsework is required. Falsework over traffic is usually not required; construction time over existing traffic is reduced.

Precast girders usually require that the bridge roadway superelevation transitions begin and end at or near piers; location of piers should consider this. The Region may be requested to adjust these transition points if possible.

Fully reinforced, composite 8 inch cast-in-place deck slabs continuous over interior piers or reinforced 5 inch cast-in-place deck slabs continuous over interior piers have been used with e. and f.

F. Composite Steel Plate Girder

1. Application

Used for simple spans up to 260 feet and for continuous spans from 120 to 400 feet. Relatively low dead load when compared to a concrete superstructure makes this bridge type an asset in areas where foundation materials are poor.

2. Characteristics

Construction details and forming are fairly simple Construction time is comparatively short. Shipping and erecting of large sections must be reviewed. Cost of maintenance is higher than for concrete bridges. Current cost information should be considered because of changing steel market conditions.

3. Depth/Span Ratios

a. Constant depth

Simple spans	$^1/_{22}$
Continuous spans	$^1/_{25}$

b. Variable depth

@ Center of span	$^1/_{40}$
@ Intermediate pier	$^1/_{20}$

G. Composite Steel Box Girder

1. Use

   Used for simple spans up to 260 feet and for continuous spans from 120 to 400 feet. Relatively low dead load when compared to a concrete superstructure makes this bridge type an asset in areas where foundation materials are poor.

2. Characteristics

   Construction details and forming are more difficult than for a steel plate girder. Shipping and erecting of large sections must be reviewed. Current cost information should be considered because of changing steel market conditions.

3. Depth/Span Ratios

   a. Constant depth

Simple spans	$1/22$
Continuous spans	$1/25$

   b. Variable depth

At Center of span	$1/40$
At Intermediate pier	$1/20$

   Note: Sloping webs are not used on box girders of variable depth.

H. Steel Truss

1. Application

   Used for simple spans up to 300 feet and for continuous spans up to 1,200 feet. Used where vertical clearance requirements dictate a shallow superstructure and long spans or where terrain dictates long spans and construction by cantilever method.

2. Characteristics

   Construction details are numerous and can be complex. Cantilever construction method can facilitate construction over inaccessible areas. Through trusses are discouraged because of the resulting restricted horizontal and vertical clearances for the roadway.

3. Depth/Span Ratios

   a. Simple spans $1/6$

   b. Continuous spans

@ Center of span	$1/18$
@ Intermediate pier	$1/9$

I. Segmental Concrete Box Girder

1. Application

   Used for continuous spans from 200 to 700 feet. Used where site dictates long spans and construction by cantilever method.

2. Characteristics

   Use of travelers for the form apparatus facilitates the cantilever construction method enabling long-span construction without falsework. Precast concrete segments may be used. Tight geometric control is required during construction to ensure proper alignment.

3. Depth/Span Ratios

Variable depth	
At Center of span	1/50
At Intermediate pier	1/20

J. Railroad Bridges

1. Use

For railway over highway grade separations, most railroad companies prefer simple span steel construction. This is to simplify repair and reconstruction in the event of derailment or some other damage to the structure.

2. Characteristics

The heavier loads of the railroad live load require deeper and stiffer members than for highway bridges. Through girders can be used to reduce overall structure depth if the railroad concurs. Piers should be normal to the railroad to eliminate skew loading effects.

3. Depth/Span Ratios

Constant depth	
Simple spans	1/12
Continuous two span	1/14
Continuous multi-span	1/15

K. Timber

1. Use

Generally used for spans under 40 feet. Usually used for detour bridges and other temporary structures. Timber bridges are not recommend for WSDOT Bridges.

2. Characteristics

Excellent for short-term duration as for a detour. Simple design and details.

3. Depth/Span Ratios

Constant depth	
Simple span – Timber beam	1/10
Simple span – Glulam beam	1/12
Continuous spans	1/14

L. Other

Bridge types such as cable-stayed, suspension, arch, tied arch, and floating bridges have special and limited applications. The use of these bridge types is generally dictated by site conditions. Preliminary design studies will generally be done when these types of structures are considered.

2.4.2 Wall Types

Retaining walls, wingwalls, curtain walls, and tall closed abutment walls may be used where required to shorten spans or superstructure length or to reduce the width of approach fills. The process of selecting a type of retaining wall should economically satisfy structural, functional, and aesthetic requirements and other considerations relevant to a specific site. A detailed listing of the common wall types and their characteristics can be found in Chapter 8 of the *Bridge Design Manual.*

2.5 Aesthetic Considerations

2.5.1 General Visual Impact

Bridge, retaining walls and noise walls have a strong visual impact in any landscape. Steps must be taken to assure that even the most basic structure will complement rather than detract from it's surroundings. The EIS and bridge site data submitted by the Region should each contain a discussion on the aesthetic importance of the project site. This commentary, together with submitted video and photographs, will help the designer determine the appropriate structure type.

The State Bridge and Structures Architect should be contacted early in the preliminary bridge plan process for input on aesthetics. Normally, a visit to the bridge site with the State Bridge and Structures Architect and Region design personnel should be made.

Aesthetics is a very subjective element that must be factored into the design process in the otherwise very quantitative field of structural engineering. Bridges that are well proportioned structurally using the least material possible are generally well proportioned. However, the details such as pier walls, columns, and crossbeams require special attention to ensure a structure that will enhance the general vicinity.

For large projects incorporating several to many bridges and retaining walls, an architectural theme is frequently developed to bring consistency in structure type, details, and architectural appointments. The preliminary plan designer shall work with the State Bridge and Structures Architect to implement the theme.

2.5.2 End Piers

A. Wingwalls

The size and exposure of the wingwall at the end pier should balance, visually, with the depth and type of superstructure used. For example, a prestressed girder structure fits best visually with a 15-foot wingwall (or curtain wall/retaining wall). However, there are instances where a 20-foot wingwall (or curtain wall/retaining wall) may be used with a prestressed girder (maximizing a span in a remote area, for example or with deep girders where they are proportionally better in appearance). The use of a 20-foot wingwall shall be approved by the Bridge Design Engineer and the State Bridge and Structures Architect.

It is less expensive for bridges of greater than 40 feet of overall width to be designed with wingwalls (or curtain wall/retaining wall) than to use a longer superstructure.

B. Retaining Walls

For structures at sites where profile, right of way, and alignment dictate the use of high exposed wall-type abutments for the end piers, retaining walls that flank the approach roadway can be used to retain the roadway fill and reduce the overall structure length. Stepped walls are often used to break up the height, and allow for landscape planting. A curtain wall runs between the bridge abutment and the heel of the abutment footing. In this way, the joint in the retaining wall stem can coincide with the joint between the abutment footing and the retaining wall footing. This simplifies design and provides a convenient breaking point between design responsibilities if the retaining walls happen to be the responsibility of the Region. The length shown for the curtain wall dimension is an estimated dimension based on experience and preliminary foundation assumptions. It can be revised under design to satisfy the intent of having the wall joint coincide with the end of the abutment footing.

C. Slope Protection

The Region is responsible for making initial recommendations regarding slope protection. It should be compatible with the site and should match what has been used at other bridges in the vicinity. The type selected shall be shown on the Preliminary Plan. It shall be noted on the "Not Included in Bridge Quantities" list.

D. Noise Walls

Approval of the State Bridge and Structures Architect is required for the final selection of noise wall appearance, finish, materials and configuration.

2.5.3 Intermediate Piers

The size, shape, and spacing of the intermediate pier elements must satisfy two criteria. They must be correctly sized and detailed to efficiently handle the structural loads required by the design and shaped to enhance the aesthetics of the structure.

The primary view of the pier must be considered. For structures that cross over another roadway, the primary view will be a section normal to the roadway. This may not always be the same view as shown on the Preliminary Plan as with a skewed structure, for example. This primary view should be the focus of the aesthetic review.

Tapers and flares on columns should be kept simple and structurally functional. Fabrication and constructability of the formwork of the pier must be kept in mind. Crossbeam ends should be carefully reviewed. Skewed bridges and bridges with steep profile grades or those in sharp vertical curves will require special attention to detail.

Column spacing should not be so small as to create a cluttered look. Column spacing should be proportioned to maintain a reasonable crossbeam span balance.

2.5.4 Barrier and Wall Surface Treatments

A. Plain Surface Finish

This finish will normally be used on structures that do not have a high degree of visibility or where existing conditions warrant. A bridge in a remote area or a bridge among several existing bridges all having a plain finish would be examples.

B. Fractured Fin Finish

This finish is the most common and an easy way to add a decorative texture to a structure. Variations on this type of finish can be used for special cases. The specific areas to receive this finish should be reviewed with the State Bridge and Structures Architect.

C. Pigmented Sealer

The use of a pigmented sealer can also be an aesthetic enhancement. The particular hue can be selected to blend with the surrounding terrain. Most commonly, this would be considered in urban areas. The selection should be reviewed with the Bridge Architect and the Region.

D. Architectural Details

Rustication grooves, relief panels, pilasters, and decorative finishes may visually improve appearance at transitions between different structure types such as cast-in-place abutments to structural earth retaining walls. Contact the State Bridge and Structures Architect for guidance.

2.5.5 Superstructure

The horizontal elements of the bridge are perhaps the strongest features. The sizing of the structure depth based on the span/depth ratios in Section 2.4.1, will generally produce a balanced relationship.

Designs rising to the level of "Art" shall be subject to the procedures outlined in the *Design Manual*.

Haunches or rounding of girders at the piers can enhance the structure's appearance. The use of such features should be kept within reason considering fabrication of materials and construction of formwork. The amount of haunch should be carefully reviewed for overall balance from the primary viewing perspective. Haunches are not limited to cast-in-place superstructures, but may be used in special cases on precast, prestressed I girders. They require job-specific forms which increase cost, and standard design software is not directly applicable.

The slab overhang dimension should approach that used for the structure depth. This dimension should be balanced between what looks good for aesthetics and what is possible with a reasonable slab thickness and reinforcement.

For box girders, the exterior webs can be sloped, but vertical webs are preferred. The amount of slope should not exceed l½: l for structural reasons, and should be limited to 4:1 if sloped webs are desired. Sloped webs should only be used in locations of high aesthetic impact.

When using precast, prestressed girders, all spans shall be the same series, unless approved otherwise by the Bridge and Structures Engineer.

2.6 Miscellaneous

2.6.1 Structure Costs

See Section 12.3 for preparing cost estimates for preliminary bridge design.

2.6.2 Handling and Shipping Precast Members and Steel Beams

Bridges utilizing precast concrete beams or steel beams need to have their access routes checked and sites reviewed to be certain that the beams can be transported to the site. It must also be determined that they can be erected once they reach the site.

Both the size and the weight of the beams must be checked. Likely routes to the site must be adequate to handle the truck and trailer hauling the beams. Avoid narrow roads with sharp turns, steep grades, and/or load-rated bridges, which may prevent the beams from reaching the site. The Bridge Preservation Office should be consulted for limitations on hauling lengths and weights.

Generally 200 kips is the maximum weight of a girder that may be hauled by truck. When the weight of a prestressed concrete girder cast in one piece exceeds 160 kips, it may be required to include a post-tensioned 2 or 3-piece option detailed in the contract plans.

The site should be reviewed for adequate space for the contractor to set up the cranes and equipment necessary to pick up and place the girders. The reach and boom angle should be checked and should accommodate standard cranes.

2.6.3 Salvage of Materials

When a bridge is being replaced or widened, the material being removed should be reviewed for anything that WSDOT may want to salvage. Items such as aluminum rail, luminaire poles, sign structures, and steel beams should be identified for possible salvage. The Region should be asked if such items are to be salvaged since they will be responsible for storage and inventory of these items.

2.7 WSDOT Standard Highway Bridge

2.7.1 Design Elements

The following are standard design elements for bridges carrying highway traffic. They are meant to provide a generic base for consistent, clean looking bridges, and to reduce design and construction costs. Modification of some elements may be required, depending on site conditions. This should be determined on a case-by-case basis during the preliminary plan stage of the design process.

A. General

Fractured Fin Finish shall be used on the exterior face of the traffic barrier. All other surfaces shall be Plain Surface Finish.

Exposed faces of wingwalls, columns, and abutments shall be vertical. The exterior face of the traffic barrier and the end of the intermediate pier crossbeam and diaphragm shall have a 1:12 backslope.

B. Substructure

End piers use the following details:

15 feet wingwalls with prestressed girders up to 74 inches in depth or a combination of curtain wall/retaining walls.

Stub abutment wall with vertical face. Footing elevation, pile type (if required), and setback dimension are determined from recommendations in the Materials Laboratory Geotechnical Services Branch Geotechnical Report.

Intermediate piers use the following details:

"Semi-raised" Crossbeams: The crossbeam below the girders is designed for the girder and slab dead load, and construction loads. The crossbeam and the diaphragm together are designed for all live loads and composite dead loads. The minimum depth of the crossbeam shall be 3 feet.

"Raised" Crossbeams: The crossbeam is at the same level as the girders are designed for all dead and live loads. "Raised" crossbeams are only used in conjunction with Prestressed Concrete Tub Girders.

Round Columns: Columns shall be 3 feet to 6 feet in diameter. Dimensions are constant full height with no tapers. Bridges with roadway widths of 40 feet or less will generally be single column piers. Bridges with roadway widths of greater the 40 feet shall have two or more columns, following the criteria established in Section 2.3.1.H. Oval or rectangular column may be used if required for structural performance or bridge visual.

C. Superstructure

Concrete Slab: 7½ inch minimum thickness, with the top and bottom mat being epoxy coated steel reinforcing bars.

Prestressed Girders: Girder spacing will vary depending on roadway width and span length. The slab overhang dimension is approximately half of the girder spacing. Girder spacing typically ranges between 6 feet and 12 feet.

Intermediate Diaphragms: Locate at the midspan for girders up to 80 feet long. Locate at third points for girders between 80 feet and 150 feet long and at quarter points for spans over 150 feet.

End Diaphragms: "End Wall on Girder" type.

Traffic Barrier: "F-shape" or Single-sloped barrier.

Fixed Diaphragm at Inter. Piers: Full or partial width of crossbeam between girders and outside of the exterior girders.

Hinged Diaphragm at Inter. Piers: Partial width of crossbeam between girders. Sloped curtain panel full width of crossbeam outside of exterior girders, fixed to ends of crossbeam.

BP Rail: 3 feet 6 inches overall height for pedestrian traffic. 4 feet 6 inches overall height for bicycle traffic.

Sidewalk: 6-inch height at curb line. Transverse slope of -0.02 feet per foot towards the curb line.

Sidewalk barrier: Inside face is vertical. Outside face slopes 1:12 outward.

D. Examples

Appendices 2.3-A2-1 and 2.7-A1-1 detail the standard design elements of a standard highway bridge.

The following bridges are good examples of a standard highway bridge. However, they do have some modifications to the standard.

SR 17 Undercrossing 395/110	Contract 3785
Mullenix Road Overcrossing 16/203E&W	Contract 4143

2.7.2 Detailing the Preliminary Plan

The Bridge Preliminary Plan is used and reviewed by the Bridge and Structures Office or consultant who will do the structural design, Region designers and managers, Geotechnical engineers, Hydraulics engineers, Program managers, FHWA engineers and local agency designers and managers. It sometimes is used in public presentation of projects. With such visibility it is important that it's detailing is clear, complete, professional, and attractive. The designer, detailer, and checker shall strive for completeness and consistency in information, layout, line style, and fonts. Appendix B contains examples of Preliminary Plans following time-proven format that may be helpful. See also Chapter 11, Detailing Practice.

Typical sheet layout is as follows:

1. Plan and Elevation views. (This sheet ultimately becomes the Layout sheet of the design plan set)
2. Typical Section including details of stage construction.

   Superelevation diagrams, tables of existing elevations, Notes to Region, and other miscellaneous details as required shall go on Sheet 2, 3, or 4, as many as are required. See also the Preliminary Plan Checklist for details, dimensions, and notes typically required. The completed plan sheets shall be reviewed for consistency by the Preliminary Plans Detailing Specialist.

2.99 Bibliography

1. Federal Highway Administration (FHWA) publication *Federal Aid Highway Program Manual*.

   FHWA Order 5520.1 (dated December 24, 1990) contains the criteria pertaining to Type, Size, and Location studies.

   Volume 6, Chapter 6, Section 2, Subsection 1, Attachment 1 (Transmittal 425) contains the criteria pertaining to railroad undercrossings and overcrossings.

2. Washington Utilities and Transportation Commission *Clearance Rules and Regulations Governing Common Carrier Railroads.*

3. American Railway Engineering and Maintenance Association (AREMA) *Manual for Railroad Engineering*. Note: This manual is used as the basic design and geometric criteria by all railroads. Use these criteria unless superseded by FHWA or WSDOT criteria.

4. Washington State Department of Transportation (WSDOT) *Design Manual* (M 22-01).

5. *Local Agency Guidelines* (M 36-63).

6. American Association of State Highway and Transportation Officials *AASHTO LRFD Bridge Design Specification.*

7. The Union Pacific Railroad *"Guidelines for Design of Highway Separation Structures over Railroad (Overhead Grade Separation)"*

Washington State Department of Transportation

Bridge Site Data General

Region	Made By	Date

Bridge Information

SR	Bridge Name	Control Section	Project No.

Highway Section	Section, Township & Range	Datum

Structure width between curbs ?

Will the structure be widened in a contract subsequent to this contract ? ☐ Yes ☐ No ☐ N/A

Which side and amount ?

Will the roadway under the structure be widened in the future? ☐ Yes ☐ No ☐ N/A

Stage construction requirements? ☐ Yes ☐ No ☐ N/A

Should the additional clearance for off-track railroad maintenance equipment be provided?

Can a pier be placed in the median? ☐ Yes ☐ No ☐ N/A

What are the required falsework or construction opening dimensions ?

Are there detour or shoofly bridge requirements? (If Yes, attach drawings) ☐ Yes ☐ No ☐ N/A

Can the R/W be adjusted to accommodate toe of approach fills? ☐ Yes ☐ No ☐ N/A

What is the required vertical clearance?

What is the available depth for superstructure?

Are overlays planned for a contract subsequent to this contract? ☐ Yes ☐ No ☐ N/A

Can profile be revised to provide greater or less clearance? ☐ Yes ☐ No ☐ N/A

If Yes, which line and how much?

Will bridge be constructed before, with or after approach fill? ☐ Before ☐ With ☐ After ☐ N/A

What are expected foundation conditions?

When can foundation drilling be accomplished?

Is slope protection or riprap required for the bridge end slopes? ☐ Yes ☐ No ☐ N/A

Are sidewalks to be provided? ☐ Yes ☐ No ☐ N/A

If Yes, which side and width?

Will sidewalks carry bicycle traffic? ☐ Yes ☐ No ☐ N/A

Will signs or illumination be attached to the structure? ☐ Yes ☐ No ☐ N/A

Will utility conduits be incorporated in the bridge? ☐ Yes ☐ No ☐ N/A

What do the bridge barriers transition to?

Furnish type and location of existing features within the limits of this project, such as retaining walls, sign support structures, utilities, buildings, powerlines, etc.

Any other data relative to selection of type, including your recommendations?

Attachments

- ☐ Vicinity Map
- ☐ Bridge Site Contour Map
- ☐ Specific Roadway sections at bridge site and approved roadway sections
- ☐ Vertical Profile Data
- ☐ Horizontal Curve Data
- ☐ Superelevation Transition Diagrams
- ☐ Tabulated field surveyed and measured stations, offsets, and elevations of existing roadways
- ☐ Photographs and video tape of structure site, adjacent existing structures and surrounding terrain
- ☐
- ☐

DOT Form 235-002 EF
Revised 1/2000

Washington State Department of Transportation

Bridge Site Data Rehabilitation

Region	Made By	Date

Bridge Information

SR	Bridge Name	Control Section	Project No.

Highway Section	Section, Township & Range	Vertical Datum

Existing roadway width, curb to curb _____ Left of ℄ _____ Right of ℄ _____

Proposed roadway width, curb to curb _____ Left of ℄ _____ Right of ℄ _____

Existing wearing surface *(concrete, HMA, HMA w /membrane, MC, epoxy, other)* _____ Thickness _____

Existing drains to be plugged, modified, moved, other? _____

Proposed overlay *(HMA, HMA w /membrame, MC, epoxy)* _____ Thickness _____

Is bridge rail to be modified? ☐ Yes ☐ No

Existing rail type _____

Proposed rail replacement type _____

Will terminal design "F" be required? ☐ Yes ☐ No

Will utilities be placed in the new barrier? ☐ Yes ☐ No

Will the structure be overlayed with or after rail replacement? ☐ With Rail Replacement ☐ After Rail Replacement

Condition of existing expansion joints _____

Existing expansion joints watertight? ☐ Yes ☐ No

Measure width of existing expansion joint, normal to skew. @ curb line _____ Inch @ ℄ roadway _____ Inch @ curb line _____ Inch

Estimate structure temperature at time of expansion joint measurement _____

Type of existing expansion joint _____

Describe damage, if any, to existing expansion joints _____

Existing Vertical Clearance _____

Proposed Vertical Clearance (at curb lines of traffic barrier) _____

Attachments

☐ Video tape of project

☐ Sketch indicating points at which expansion joint width was measured.

☐ Photographs of existing expansion joints.

☐ Existing deck chloride and delamination data.

☐ Roadway deck elevations at curb lines (10-foot spacing)

DOT Form 235-002A EF
Revised 5/05

Washington State Department of Transportation

Bridge Site Data Stream Crossings

Region	Made By	Date

Bridge Information

SR	Bridge Name	Control Section	Project No.

Highway Section	Section, Township & Range	Datum

Name of Stream	Tributary of

Elevation of W.S. *(@ date of survey)* _____ Stream Velocity *(fps @ date of survey)* _____ Depth of Flow *(@ date of survey)* _____

Max Highwater Elevation _____ @ Date _____

Normal Highwater Elevation _____ @ Date _____

Normal Stage Elevation _____ @ Date _____

Extreme Low Water Elevation _____ @ Date _____

Amount and Character of Drift _____

Streambed Material _____

Datum *(i.e., USC and GS, USGS, etc.)* _____

Manning's "N" Value *(Est.)* _____

Attachments

- ☐ Site Contour Map *(See Sect. 7.02.00 Highway Hydraulic Manual)*
- ☐ Highway Alignment and Profile *(refer to map and profiles)*
- ☐ Streambed: Profile and Cross Sections *(500 ft. upstream and downstream)*
- ☐ Photographs
- ☐ Character of Stream Banks *(i.e., rock, silt, etc.)* / Location of Solid Rock
- ☐ Other Data Relative to Selection of Type and Design of Bridge, Including your Recommendations *(i.e., requirements of riprap, permission of piers in channel, etc.)*

DOT Form 235-001 EF
Revised 3/97

Project _____ SR_____ Prelim. Plan by _____ Check by _____ Date_____

PLAN

___ Survey Lines and Station Ticks
___ Survey Line Intersection Angles
___ Survey Line Intersection Stations
___ Survey Line Bearings
___ Roadway and Median Widths
___ Lane and Shoulder Widths
___ Sidewalk Width
___ Connection/Widening for Guardrail/Barrier
___ Profile Grade and Pivot Point
___ Roadway Superelevation Rate (if constant)
___ Lane Taper and Channelization Data
___ Traffic Arrows
___ Mileage to Junctions along Mainline
___ Back to Back of Pavement Seats
___ Span Lengths
___ Lengths of Walls next to/part of Bridge
___ Pier Skew Angle
___ Bridge Drains, or Inlets off Bridge
___ Existing drainage structures
___ Existing utilities Type, Size, and Location
___ New utilities - Type, Size, and Location
___ Luminaires, Junction Boxes, Conduits
___ Bridge mounted Signs and Supports
___ Contours
___ Top of Cut, Toe of Fill
___ Bottom of Ditches
___ Test Holes (if available)
___ Riprap Limits
___ Stream Flow Arrow
___ R/W Lines and/or Easement Lines
___ Points of Minimum Vertical Clearance
___ Horizontal Clearance
___ Exist. Bridge No. (to be removed, widened)
___ Section, Township, Range
___ City or Town
___ North Arrow
___ SR Number
___ Bearing of Piers, or note if radial

MISCELLANEOUS

___ Structure Type
___ Live Loading
___ Undercrossing Alignment Profiles/Elevs.
___ Superelevation Diagrams
___ Curve Data
___ Riprap Detail
___ Plan Approval Block
___ Notes to Region
___ Names and Signatures
___ Not Included in Bridge Quantities List
___ Inspection and Maintenance Access

ELEVATION

___ Full Length Reference Elevation Line
___ Existing Ground Line x ft. Rt of Survey Line
___ End Slope Rate
___ Slope Protection
___ Pier Stations and Grade Elevations
___ Profile Grade Vertical Curves
___ BP/Pedestrian Rail
___ Barrier/Wall Face Treatment
___ Construction/Falsework Openings
___ Minimum Vertical Clearances
___ Water Surface Elevations and Flow Data
___ Riprap
___ Seal Vent Elevation
___ Datum
___ Grade elevations shown are equal to …
___ For Embankment details at bridge ends...
___ Indicate F, H, or E at abutments and piers

TYPICAL SECTION

___ Bridge Roadway Width
___ Lane and Shoulder Widths
___ Profile Grade and Pivot Point
___ Superelevation Rate
___ Survey Line
___ Overlay Type and Depth
___ Barrier Face Treatment
___ Limits of Pigmented Sealer
___ BP/Pedestrian Rail dimensions
___ Stage Construction, Stage traffic
___ Locations of Temporary Concrete Barrier
___ Closure Pour
___ Structure Depth/Prestressed Girder Type
___ Conduits/Utilities in bridge
___ Substructure Dimensions

LEFT MARGIN

___ Job Number
___ Bridge (before/with/after) Approach Fills
___ Structure Depth/Prestressed Girder Type
___ Deck Protective System
___ Coast Guard Permit Status
(Requirement for all water crossing)
___ Railroad Agreement Status
___ Points of Minimum Vertical Clearance
___ Cast-in-Place Concrete Strength

RIGHT MARGIN

___ Control Section
___ Project Number
___ Region
___ Highway Section
___ SR Number
___ Structure Name

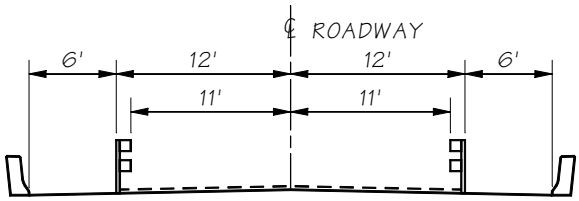

1. NO LANES OPEN: RELATIVE CAST FACTOR (RCF) = 1.0



2. TWO LANES OPEN WITH NEW ALIGNMENT: RFC = 1.0



3. ONE LANE OPEN WITH NEW ALIGNMENT AND STAGE CONSTRUCTION: RCF = 1.2



4. ONE LANE OPEN WITH STAGE CONSTRUCTION: RCF = 1.2

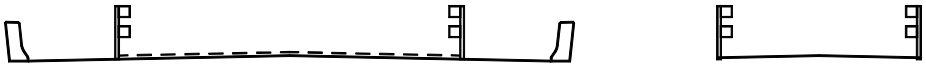

5. ONE LANE OPEN WITH DETOUR: RCF = 1.3

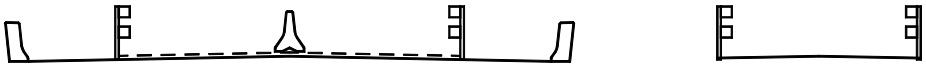

6. TWO LANES OPEN WITH DETOUR AND STAGE CONSTRUCTION: RCF = 1.5



7. TWO LANES OPEN WITH DETOUR: RCF = 1.6

ASSUMPTIONS:
NEW BRIDGE, TWO SPAN PRESTRESSED GIRDER, 200 FEET LONG.
DETOUR BRIDGE, TWO SPAN STEEL GIRDER WITH TIMBER TRESTLES, 200 FEET LONG.
$50/FT² WITH 20% PREMIUM WHEN STAGING CONSTRUCTION.

THIS CHART IS INTENDED TO SHOW SOME OF THE MANY OPTIONS AVAILABLE FOR STAGING BRIDGE CONSTRUCTION. THE ACTUAL COST FACTORS FOR A SPECIFIC PROJECT ARE VERY SENSITIVE TO THE FACTORS OUTLINED IN SECTION 2.2.3. ANY COMPARISON MADE FOR A PROJECT SHOULD BE UNDER THE GUIDANCE OF THE PRELIMINARY DESIGN UNIT OF THE BRIDGE AND STRUCTURES OFFICE.

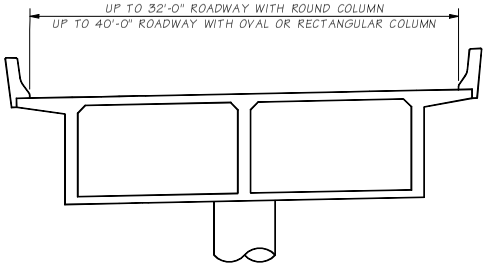

1 COLUMN MINIMUM

PROVIDE COLLISION PROTECTION OR DESIGN FOR COLLISION LOADS.

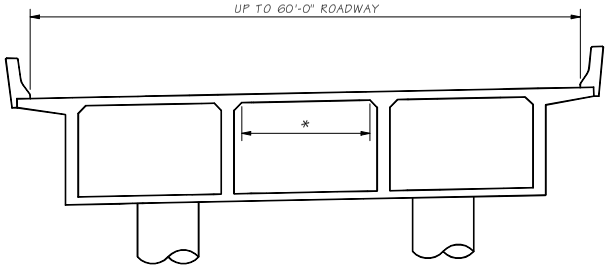

2 COLUMNS MINIMUM

PROVIDE COLLISION PROTECTION OR DESIGN FOR COLLISION LOADS.

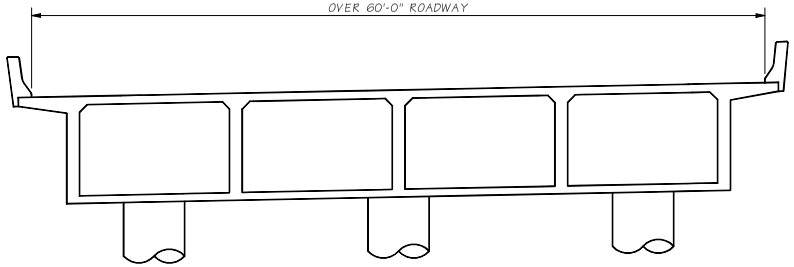

3 COLUMNS MINIMUM

SUBSTRUCTURE DESIGN

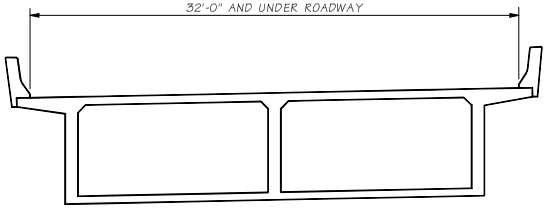

3 WEBS MINIMUM

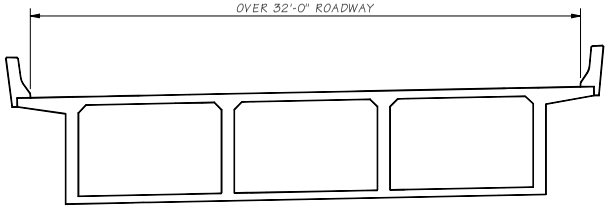

4 WEBS MINIMUM

SUPERSTRUCTURE DESIGN

DESIGN NOTES:

1. USE THE MINIMUM COLUMNS AND WEBS SHOWN TO MEET REDUNDANCY CRITERIA FOR PREVENTING CATASTROPHIC COLLAPSE OF BRIDGES.
2. DRAWINGS ARE SHOWN FOR CONCRETE BOX GIRDERS BRIDGES, BUT THE COLUMN AND WEB REQUIREMENTS ALSO APPLY TO OTHER BRIDGE TYPES.

* 8'-0" MAX. IS PREFFERED FOR EASE OF CONSTRUCTION.

BRIDGE REDUNDANCY CRITERIA

Bridge Design Engr.	M:\BRIDGELIB\BDM\Chapter 2\window files\S23A21.wnd			STATE	FED. AID PROJ. NO.	SHEET NO.	TOTAL SHEETS	BRIDGE AND STRUCTURES OFFICE	Washington State Department of Transportation	BRIDGE SHEET NO.
Supervisor										
Designed By				10 WASH.						SHEET
Checked By										OF
Detailed By				JOB NUMBER						SHEETS
Bridge Projects Engr.										
Prelim. Plan By										
Architect/Specialist	DATE	REVISION	BY	APP'D						

JOB NO. SHEET
SR

Thu Jan 03 14:11:43 2008

	STRUCTURE TYPES	SPAN RANGE, FT.	JULY 2006 COST RANGE $ / FT²
HYDAULIC STRUCTURES	PIPE	1 - 3	30 - 60
	CONCRETE CULVERT	3 - 20	100 - 120
	PLATE ARCH	12 - 20	65 - 80
STRUCTURES FOR CONVENTIONAL SITE CONDITIONS	REINF. CONCRETE SLAB	20 - 60	90 - 130
	REINF. CONCRETE TEE BEAM	30 - 60	90 - 140
	REINF. CONCRETE BOX GIRDER	50 - 120	180 - 250
	POST-TENSIONED CONC. BOX GIRDER	140 - 200	200 - 300
	SEGMENTAL P.T. BOX GIRDER	200 - 700	250 - 300
	PRESTRESSED CONC. SLAB	15 - 80	100 - 120
	PRESTRESSED CONC. DECK BULB TEE	40 - 160	100 - 145
	PRESTRESSED CONC. GIRDER	50 - 180	130 - 190
	PRESTRESSED TRAPEZOIDAL TUB GIRDER	40 - 140	160 - 200
	PRESTRESSED CONCRETE SPLICED GIRDER	140 - 230	150 - 200
	STEEL ROLLED GIRDER	20 - 70	140 - 160
	STEEL PLATE GIRDER	60 - 400	150 - 220
	STEEL BOX GIRDER	60 - 400	200 - 275
	STEEL TRUSS	300 - 1200	250 - 375
	TIMBER	10 - 20	120 - 140
	GLULAM TIMBER	14 - 40	120 - 140
STRUCTURES FOR SPECIAL SITE CONDITIONS	CABLE STAY BRIDGE	600 - 1200	500 - 600
	SUSPENSION BRIDGE	600 - 5000	850 - 1200
	FLOATING BRIDGE	600 +	800 - 1000
	ARCH BRIDGE	30 - 400	400 - 450
	MOVEABLE SPAN BRIDGE	200 - 350	1500 - 2000
	TUNNEL	30 +	1500 - 3000

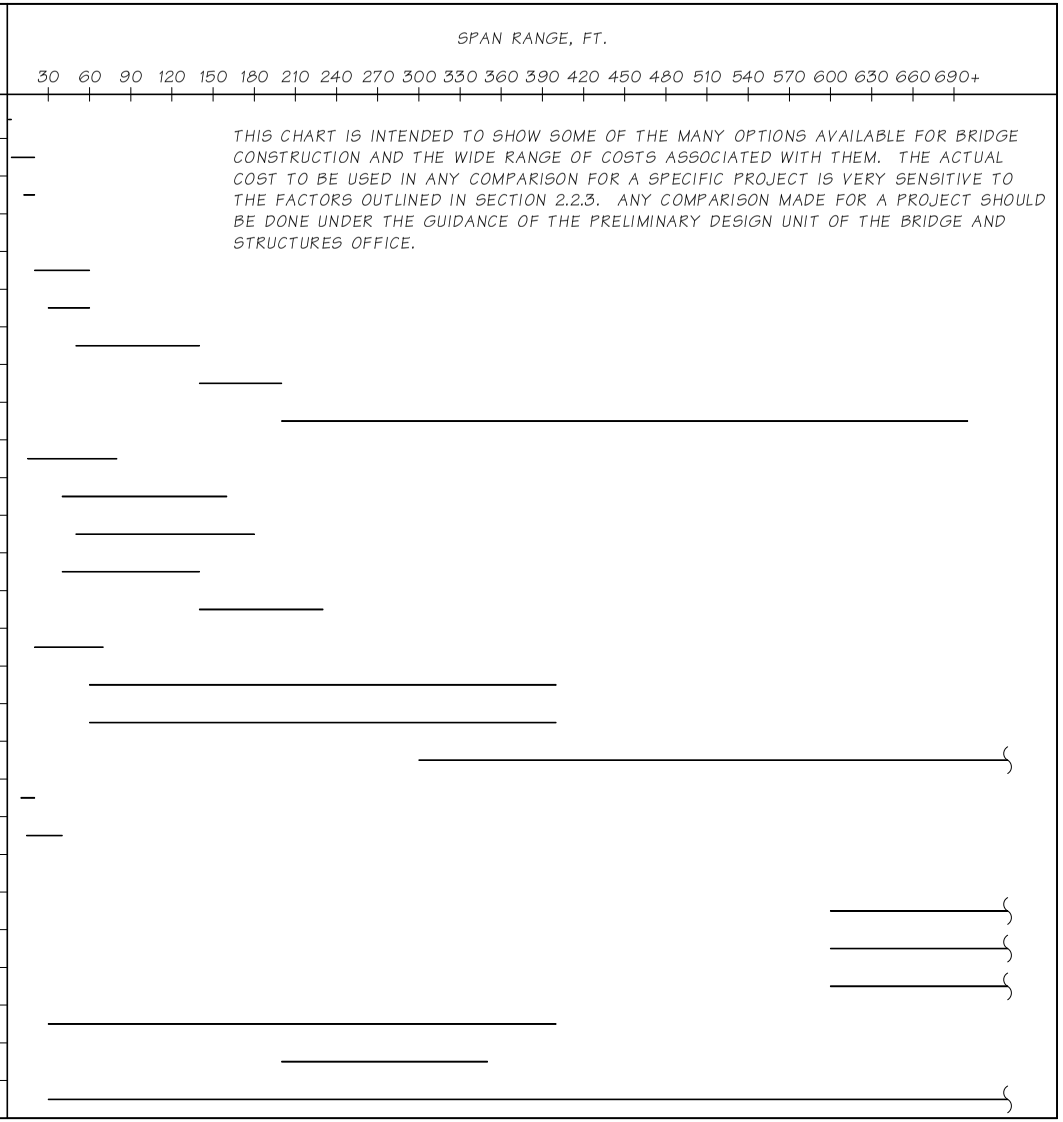

Bridge Design Engr.	M:\BRIDGE\LIB\BDM\Chapter 2\window files\Bridge Selection Guide.wnd				STATE	FED. AID PROJ. NO.	SHEET NO.	TOTAL SHEETS	BRIDGE AND STRUCTURES OFFICE
Supervisor									Washington State Department of Transportation
Designed By				10	WASH.				
Checked By									
Detailed By				JOB NUMBER					
Bridge Projects Engr.									
Prelim. Plan By									
Architect/Specialist	DATE	REVISION	BY	APP'D					BRIDGE SHEET NO. SHEET OF SHEETS

SR ____ JOB NO. ____ SHEET ____

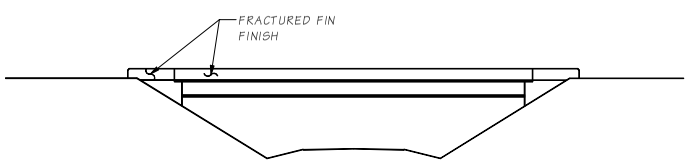

ELEVATION
SINGLE SPAN BRIDGE

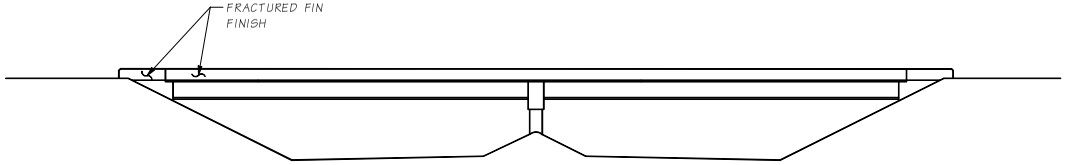

ELEVATION
TWO SPAN BRIDGE

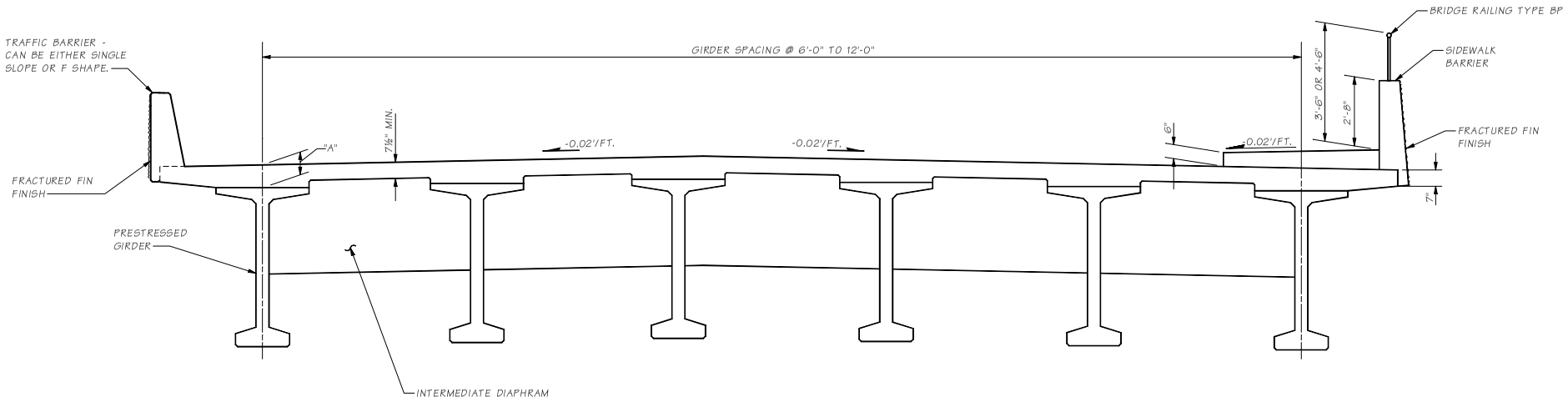

STANDARD SUPERSTRUCTURE ELEMENTS

Bridge Design Engr.	M:\BRIDGELIB\BDM\Chapter 2\window files\S27B11.wnd			STATE	FED. AID PROJ. NO.	SHEET NO.	TOTAL SHEETS	BRIDGE AND STRUCTURES OFFICE	Washington State Department of Transportation	BRIDGE SHEET NO.
Supervisor				10 WASH.						
Designed By										SHEET
Checked By				JOB NUMBER						OF
Detailed By										SHEETS
Bridge Projects Engr.										
Prelim. Plan By										
Architect/Specialist	DATE	REVISION	BY	APP'D						

Thu Jul 27 11:57:29 2006

SR ____ JOB NO. ____ SHEET

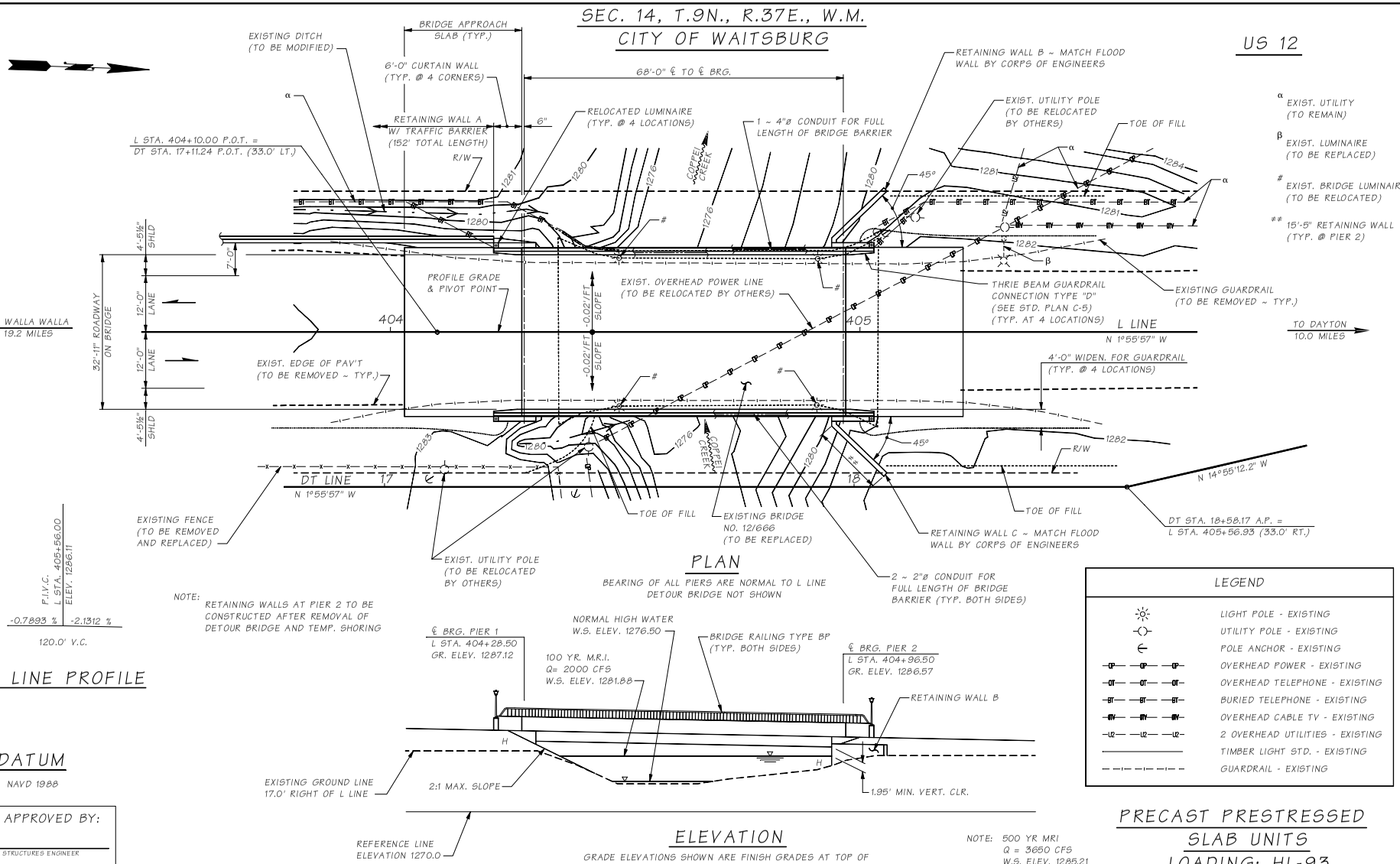
SEC. 14, T.9N., R.37E., W.M.
CITY OF WAITSBURG
US 12
EXISTING DITCH (TO BE MODIFIED)
BRIDGE APPROACH SLAB (TYP.)
6'-0" CURTAIN WALL (TYP. @ 4 CORNERS)
68'-0" ℄ TO ℄ BRG.
RETAINING WALL A W/ TRAFFIC BARRIER (152' TOTAL LENGTH)
6"
RELOCATED LUMINAIRE (TYP. @ 4 LOCATIONS)
1 ~ 4"ø CONDUIT FOR FULL LENGTH OF BRIDGE BARRIER
RETAINING WALL B ~ MATCH FLOOD WALL BY CORPS OF ENGINEERS
EXIST. UTILITY POLE (TO BE RELOCATED BY OTHERS)
TOE OF FILL
L STA. 404+10.00 P.O.T. = DT STA. 17+11.24 P.O.T. (33.0' LT.)
R/W
COPPEI CREEK
45°
α EXIST. UTILITY (TO REMAIN)
β EXIST. LUMINAIRE (TO BE REPLACED)
EXIST. BRIDGE LUMINAIRE (TO BE RELOCATED)
15'-5" RETAINING WALL (TYP. @ PIER 2)
FT. OF MIN. VERT. CLR; L STA. 404+95.00 (18.0' RT.)
4'-5½" SHLD
7'-0"
12'-0" LANE
12'-0" LANE
4'-5½" SHLD
32'-1" ROADWAY ON BRIDGE
PROFILE GRADE & PIVOT POINT
EXIST. OVERHEAD POWER LINE (TO BE RELOCATED BY OTHERS)
0.02'/FT SLOPE
0.02'/FT SLOPE
THRIE BEAM GUARDRAIL CONNECTION TYPE "D" (SEE STD. PLAN C-5) (TYP. AT 4 LOCATIONS)
EXISTING GUARDRAIL (TO BE REMOVED ~ TYP.)
TO WALLA WALLA 19.2 MILES
404
405
L LINE
N 1°55'57" W
TO DAYTON 10.0 MILES
EXIST. EDGE OF PAV'T (TO BE REMOVED ~ TYP.)
4'-0" WIDEN. FOR GUARDRAIL (TYP. @ 4 LOCATIONS)
DT LINE
N 1°55'57" W
17
18
R/W
N 14°55'12.2" W
EXISTING FENCE (TO BE REMOVED AND REPLACED)
TOE OF FILL
EXISTING BRIDGE NO. 12/666 (TO BE REPLACED)
TOE OF FILL
RETAINING WALL C ~ MATCH FLOOD WALL BY CORPS OF ENGINEERS
DT STA. 18+58.17 A.P. = L STA. 405+56.93 (33.0' RT.)
EXIST. UTILITY POLE (TO BE RELOCATED BY OTHERS)
2 ~ 2"ø CONDUIT FOR FULL LENGTH OF BRIDGE BARRIER (TYP. BOTH SIDES)
P.I.V.C. L STA. 405+56.00 ELEV. 1286.11
-0.7893 %
-2.1312 %
120.0' V.C.
NOTE: RETAINING WALLS AT PIER 2 TO BE CONSTRUCTED AFTER REMOVAL OF DETOUR BRIDGE AND TEMP. SHORING
PLAN
BEARING OF ALL PIERS ARE NORMAL TO L LINE
DETOUR BRIDGE NOT SHOWN
L LINE PROFILE
℄ BRG. PIER 1 L STA. 404+28.50 GR. ELEV. 1287.12
NORMAL HIGH WATER W.S. ELEV. 1276.50
100 YR. M.R.I. Q= 2000 CFS W.S. ELEV. 1281.88
BRIDGE RAILING TYPE BP (TYP. BOTH SIDES)
℄ BRG. PIER 2 L STA. 404+96.50 GR. ELEV. 1286.57
RETAINING WALL B
H
H
EXISTING GROUND LINE 17.0' RIGHT OF L LINE
2:1 MAX. SLOPE
1.95' MIN. VERT. CLR.
REFERENCE LINE ELEVATION 1270.0
ELEVATION
GRADE ELEVATIONS SHOWN ARE FINISH GRADES AT TOP OF 3" ACP OVERLAY ON L LINE AND ARE EQUAL TO PROFILE GRADE.
NOTE: 500 YR MRI Q = 3650 CFS W.S. ELEV. 1285.21
LEGEND
LIGHT POLE - EXISTING
UTILITY POLE - EXISTING
POLE ANCHOR - EXISTING
OVERHEAD POWER - EXISTING
OVERHEAD TELEPHONE - EXISTING
BURIED TELEPHONE - EXISTING
OVERHEAD CABLE TV - EXISTING
2 OVERHEAD UTILITIES - EXISTING
TIMBER LIGHT STD. - EXISTING
GUARDRAIL - EXISTING
PRECAST PRESTRESSED SLAB UNITS
LOADING: HL-93
DATUM
NAVD 1988
COAST GUARD LIAISON
COAST GUARD PERMIT NOT REQ'D
PERMIT TARGET DATE
BRIDGE WITH APPROACH FILLS
PRECAST PRETRESSED SLAB (26" DEEP)
DECK PROTECTIVE SYSTEM 3 (EPOXY COATED REBARS)
CAST-IN-PLACE CONCRETE STRENGTH SHALL BE 4000 PSI
PLAN APPROVED BY:
BRIDGE AND STRUCTURES ENGINEER
PROJECT DEVELOPMENT ENGINEER
SHEET
JOB NO.
SR 2-B-1
Bridge Design Engr.
Supervisor
Designed By
Checked By
Detailed By
Bridge Projects Engr.
Prelim. Plan By
Architect/Specialist
M:\BRIDGELIB\BDM\Chapter 2\Window files\S2B1.WND
STATE 10 WASH.
JOB NUMBER
FED. AID PROJ. NO.
SHEET NO.
TOTAL SHEETS
DATE REVISION BY APPD
BRIDGE AND STRUCTURES OFFICE
Washington State Department of Transportation
BRIDGE SHEET NO.
SHEET OF SHEETS
Fri Aug 25 11:05:14 2006
C.S. 3601 ☐ PROJ. NO. XL1295 ☐ SOUTH CENTRAL REGION ☐ US 12 ☐ MP 357.84 CITY OF WAITSBURG ☐ COPPEI CREEK BRIDGE NO. 12/666 REPLACEMENT

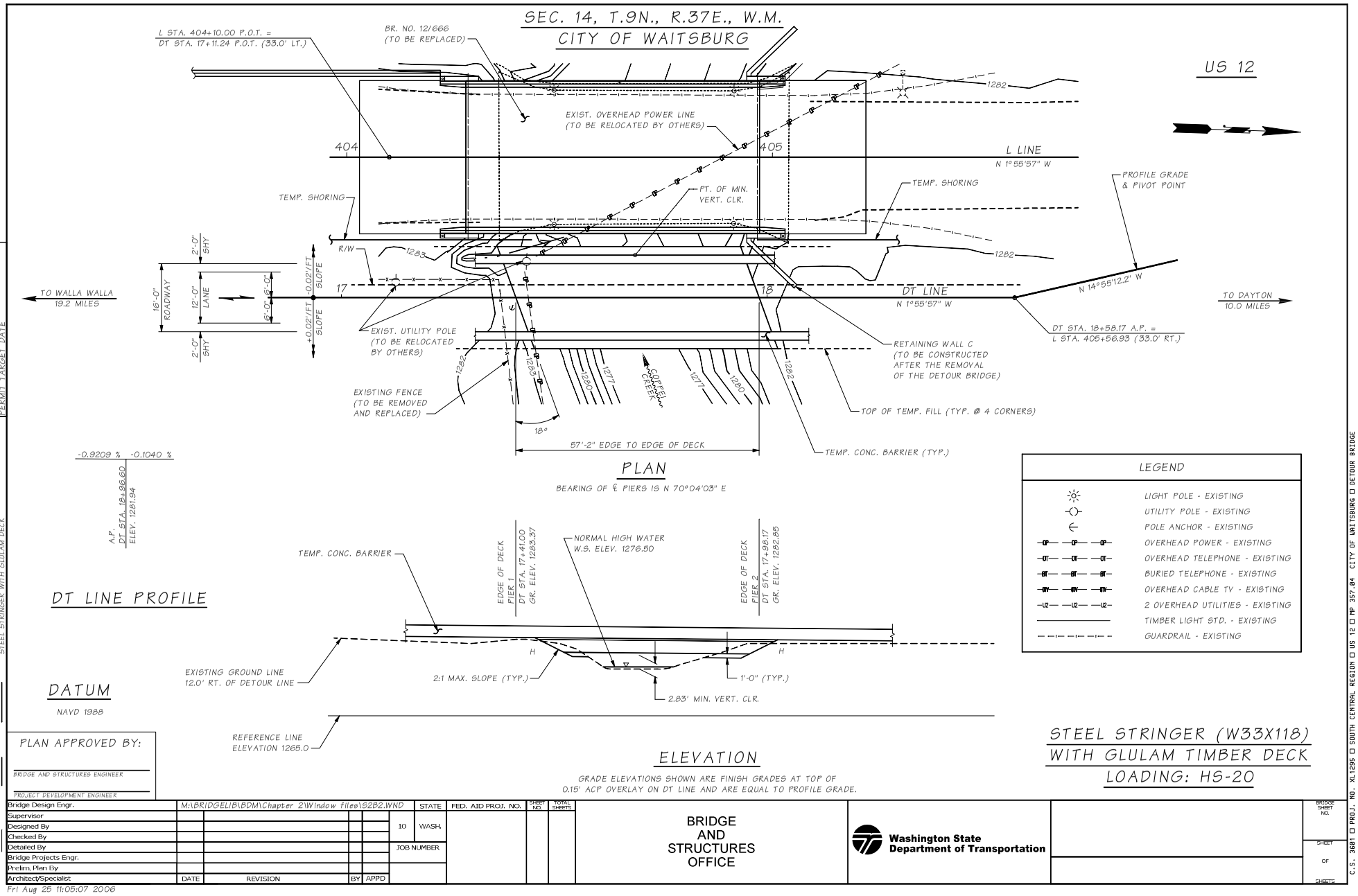
SEC. 14, T.9N., R.37E., W.M.
CITY OF WAITSBURG
L STA. 404+10.00 P.O.T. =
DT STA. 17+11.24 P.O.T. (33.0' LT.)
BR. NO. 12/666
(TO BE REPLACED)
US 12
EXIST. OVERHEAD POWER LINE
(TO BE RELOCATED BY OTHERS)
404
405
L LINE
N 1°55'57" W
PT. OF MIN. VERT. CLR.
DT STA. 8+19.0 (9.5' LT)
TEMP. SHORING
PT. OF MIN. VERT. CLR.
TEMP. SHORING
PROFILE GRADE
& PIVOT POINT
R/W
1283
1282
2'-0" SHY
16'-0" ROADWAY
12'-0" LANE
6'-0"
6'-0"
2'-0" SHY
-0.02'/FT SLOPE
+0.02'/FT SLOPE
TO WALLA WALLA
19.2 MILES
17
18
DT LINE
N 1°55'57" W
N 14°55'12.2" W
TO DAYTON
10.0 MILES
EXIST. UTILITY POLE
(TO BE RELOCATED
BY OTHERS)
DT STA. 18+58.17 A.P. =
L STA. 405+56.93 (33.0' RT.)
RETAINING WALL C
(TO BE CONSTRUCTED
AFTER THE REMOVAL
OF THE DETOUR BRIDGE)
1282
1283
1280
1277
CORRELL CREEK
1277
1280
1282
EXISTING FENCE
(TO BE REMOVED
AND REPLACED)
TOP OF TEMP. FILL (TYP. @ 4 CORNERS)
18°
57'-2" EDGE TO EDGE OF DECK
TEMP. CONC. BARRIER (TYP.)
PLAN
BEARING OF ℄ PIERS IS N 70°04'03" E
COAST GUARD LIAISON
COAST GUARD PERMIT NOT REQ'D
PERMIT TARGET DATE
BRIDGE WITH APPROACH FILLS
DETOUR BRIDGE W 33X118 GIRDERS
STEEL STRINGER WITH GLULAM DECK
-0.9209 %
-0.1040 %
A.P.
DT STA. 18+96.60
ELEV. 1281.94
DT LINE PROFILE
TEMP. CONC. BARRIER
EDGE OF DECK
PIER 1
DT STA. 17+41.00
GR. ELEV. 1283.37
NORMAL HIGH WATER
W.S. ELEV. 1276.50
EDGE OF DECK
PIER 2
DT STA. 17+98.17
GR. ELEV. 1282.85
H
H
EXISTING GROUND LINE
12.0' RT. OF DETOUR LINE
2:1 MAX. SLOPE (TYP.)
1'-0" (TYP.)
2.83' MIN. VERT. CLR.
DATUM
NAVD 1988
REFERENCE LINE
ELEVATION 1265.0
ELEVATION
GRADE ELEVATIONS SHOWN ARE FINISH GRADES AT TOP OF
0.15' ACP OVERLAY ON DT LINE AND ARE EQUAL TO PROFILE GRADE.
LEGEND
LIGHT POLE - EXISTING
UTILITY POLE - EXISTING
POLE ANCHOR - EXISTING
OVERHEAD POWER - EXISTING
OVERHEAD TELEPHONE - EXISTING
BURIED TELEPHONE - EXISTING
OVERHEAD CABLE TV - EXISTING
2 OVERHEAD UTILITIES - EXISTING
TIMBER LIGHT STD. - EXISTING
GUARDRAIL - EXISTING
STEEL STRINGER (W33X118)
WITH GLULAM TIMBER DECK
LOADING: HS-20
PLAN APPROVED BY:
BRIDGE AND STRUCTURES ENGINEER
PROJECT DEVELOPMENT ENGINEER
SHEET
JOB NO.
2-B-2
SR
Bridge Design Engr.
Supervisor
Designed By
Checked By
Detailed By
Bridge Projects Engr.
Prelim. Plan By
Architect/Specialist
M:\BRIDGELIB\BDM\Chapter 2\Window files\S2B2.WND
STATE
10
WASH.
JOB NUMBER
FED. AID PROJ. NO.
SHEET NO.
TOTAL SHEETS
DATE
REVISION
BY
APPD
BRIDGE AND STRUCTURES OFFICE
Washington State Department of Transportation
BRIDGE SHEET NO.
SHEET
OF
SHEETS
Fri Aug 25 11:05:07 2006
C.S. 3681 □ PROJ. NO. X1295 □ SOUTH CENTRAL REGION □ US 12 □ MP 357.84 CITY OF WAITSBURG □ DETOUR BRIDGE

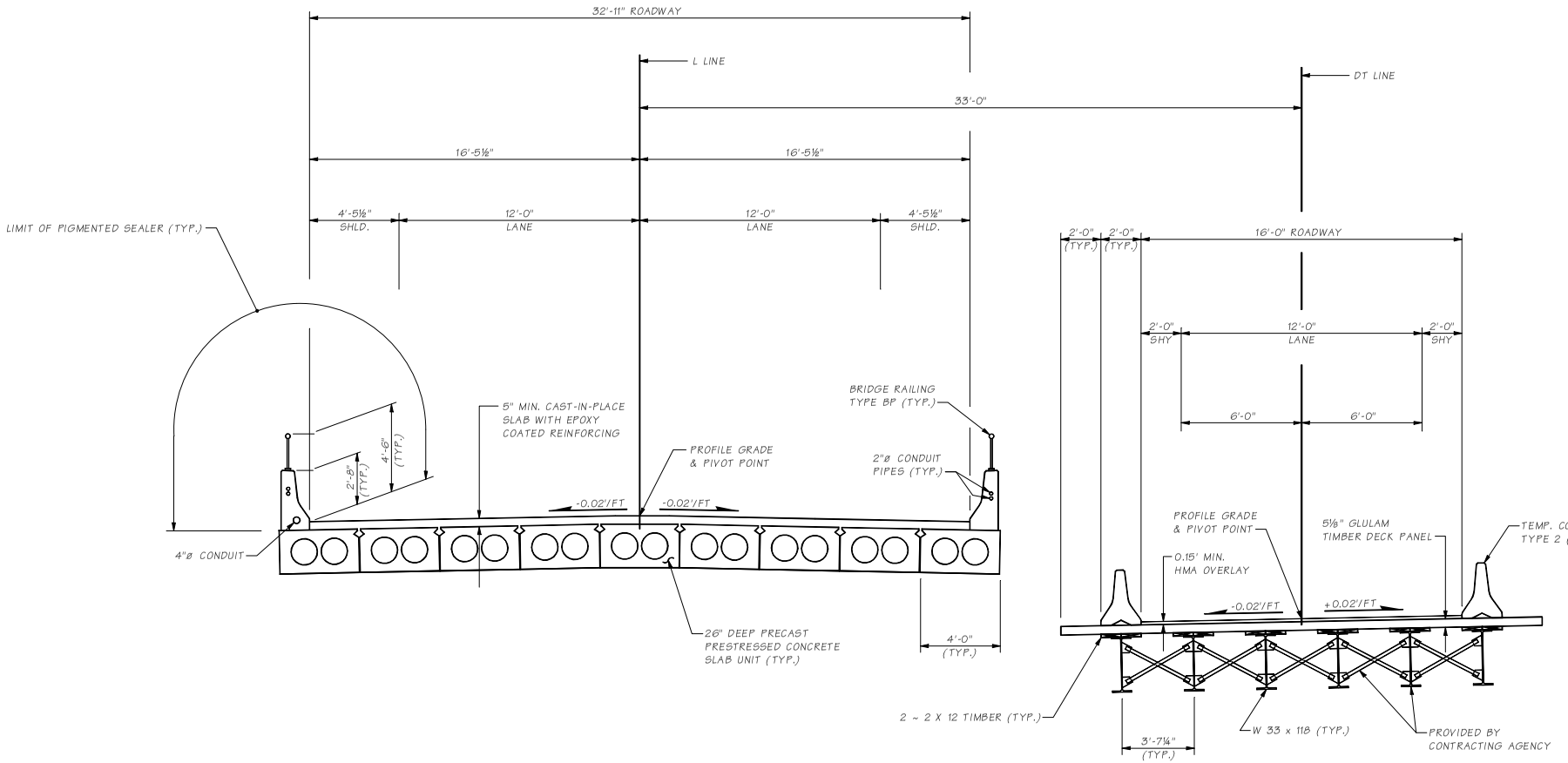

TYPICAL SECTION
BRIDGE NO. 12/666 & DETOUR BRIDGE

SHOWN NEAR MID SPAN

Bridge Design Engr.	M:\BRIDGELIB\BDM\Chapter 2\Window files\S2B3.WND			STATE	FED. AID PROJ. NO.	SHEET NO.	TOTAL SHEETS	BRIDGE AND STRUCTURES OFFICE	Washington State Department of Transportation	BRIDGE SHEET NO.
Supervisor										
Designed By				10 WASH.						SHEET
Checked By										
Detailed By				JOB NUMBER						OF
Bridge Projects Engr.										SHEETS
Prelim. Plan By										
Architect/Specialist	DATE	REVISION	BY	APPD						

Fri Aug 25 11:05:03 2006

SR ____ JOB NO. ____ SHEET ____

2-B-3

C.S. 3601 □ PROJ. NO. XL1295 □ SOUTH CENTRAL REGION □ US 12 □ MP 357.84 CITY OF WAITSBURG □ COPPEI CREEK BRIDGE NO. 12/666 REPLACEMENT

CURVE DATA					
P.I. STATION	Δ	RADIUS	TANGENT	LENGTH	BK. TANGENT BRG.
L 347+80.00	37°42'00'' LT.	4590.00'	1567.03'	3020.17'	N 21°44'52'' E

NOTE:
EXIST. STORM DRAIN PIPE, MANHOLES AND CATCH BASINS, TO BE ABANDONED UNLESS OTHERWISE NOTED.

SEC. 26, T.3N., R.1E., W.M.
CLARK COUNTY

SR 5

134TH A LINE
134TH A STA. 10+00 = L-LINE STA. 362+76.18 (55.5' LT.)
134TH B LINE
134TH B STA. 10+00 = L-LINE STA. 364+82.76 (82' RT.)
TO VANCOUVER 6 MILES
TO OLYMPIA 95 MILES
N 17°22'08" W
N 13°39'40" W
175'-3" BK. TO BK. OF PAV'T SEATS
80'-0"
95'-3"
L-LINE
NE 129TH LINE
S 88°48'18" E
NE 129TH STA. 8+35.19 = NE 18TH STA. 10+00
NE 18TH LINE
S 2°34'43" E
NE 18TH STA. 10+42.54 P.C.
14° 39' 03" SKEW (TYP.)
75°20'57"
NE 129TH STA. 10+00.00 (P.O.T.) = L STA. 360+33.14 (P.O.C.)
PT. OF MIN. VERT. CLR.
TOP OF FILL
TOP OF CUT
PROFILE GRADE & PIVOT POINT
EXISTING PILE CAP (TO BE REMOVED)
EXIST. BR. NO. 5/23 (TO BE REMOVED)
T.H. NO. 6U
T.H. NO. 5
McD LINE
N 04°45'16" W
TRP LINE
S 01° 37' 24" W
NE 129TH STA. 11+59.73 = McD STA. 10+00
NE 129TH STA. 11+97.96 = TRP STA. 10+00
RETAINING WALL #12
RETAINING WALL #13
RETAINING WALL #14
RETAINING WALL #10
36'-3"
EXISTING OVERHEAD POWER LINE (TO REMAIN)
EXISTING FENCE (TO BE REMOVED)
EXISTING CURB (TO BE REMOVED)
CATCH BASIN TYPE 1 SEE STD. PLAN B-1 (TYP. 4 LOCATIONS)
PROFILE GRADE & PIVOT POINT
2'-0" WIDENING FOR GUARDRAIL
R/W
JUNCTION BOX (TYP. 2 LOCATIONS)
TYPE 1 GUARDRAIL TRANSITION WITH D CONNECTION
EXISTING GUARDRAIL (TO BE REMOVED ~ TYP.)
EXISTING FENCE (TO BE REMOVED)
8'-0" CURTAIN WALL (TYP. 4 LOCATIONS)
TOP OF CUT
GORE VAR.
12'-0" LANE
13'-0" LANE
8'-0" SHLD.
6'-6" SDWK.
40'-0" ROADWAY
12'-0" LANE
10'-0" SHLD.
6'-0" SHLD.
2% SLOPE
-1:100

PLAN
BEARING OF ALL PIERS N 13° 27' 21" W

2 ~ 2"ø CONDUITS IN BARRIER FOR FULL LENGTH OF BRIDGE, CURTAIN WALLS AND RETAINING WALLS (TYP.)
α EXIST. STORM SEWER LINE (TO BE REMOVED)
αα EXIST. STORM SEWER LINE (TO REMAIN)
β EXIST. WATER LINE (TO BE REMOVED)
* EXIST. GAS LINE (TO BE REMOVED)
+ 8"ø GAS LINE
Ø EXIST. TELEPHONE LINE (TO BE REMOVED)
++ 12"ø DUCTILE CAST IRON WATER PIPE
≠ EXIST. SANITARY SEWER LINE TO BE RELOCATED
EXIST. PILE CAP (TO REMAIN)
*** EXISTING FENCE (TO BE REMOVED)
ØØØ 4 ~ 4"ø TELEPHONE CONDUITS
BRIDGE-MOUNTED LIGHTED SIGN (16' H X 10' V)
BRIDGE-MOUNTED LIGHTED SIGN (20' H X 10' V)

BRIDGE WITH APPROACH FILLS
4'-3" DEEP CONCRETE BOX GIRDER SUPERSTRUCTURE
DECK PROTECTIVE SYSTEM 1 (EPOXY COATED REBARS)
CAST-IN-PLACE CONCRETE SHALL BE CLASS 4000

P.I.V.C. 129TH STA. 10+50
ELEV. 213.70
+0.5357 %
-5.8696 %
360' V.C.

NE 129TH LINE PROFILE

EXISTING GROUND LINE 26.50' RT. OF NE 29TH LINE
BRIDGE RAILING TYPE CHAIN LINK FENCE
BK. OF PAV'T SEAT PIER 1 NE 129TH STA. 9+20.00 GR. ELEV. 212.78
℄ PIER 2 NE 129TH STA. 10+00 GR. ELEV. 211.93
BK. OF PAV'T SEAT PIER 3 NE 129TH STA. 10+95.25 GR. ELEV. 209.43
PIGMENTED SEALER
FRACTURED FIN FINISH W/PIGMENTED SEALER (TYP.)
1:2 MAX. SLOPE (TYP.)
CONC. BARRIER TYPE 4
CONC. BARRIER TYPE 4 W/TRANSITION SECTION (SEE STD. PLAN C-8a)
22.18' MIN. VERT. CLR.
16.97' MIN. VERT. CLR.
L LINE
REFERENCE LINE ELEVATION 170.00

ELEVATION

GRADE ELEVATIONS SHOWN ARE FINISH GRADES AT TOP OF ROADWAY SLAB ON NE 129TH LINE AND ARE EQUAL TO PROFILE GRADE.
SEE STD. PLAN H-9 FOR EMBANKMENT DETAILS AT SOUTHWEST END OF BRIDGE.

DATUM
N.A.V.D. OF 1988

PRECAST POST-TENSIONED CONCRETE BOX GIRDER LOADING: HL-93

PLAN APPROVED BY:
J. A. Weigel 04/01
BRIDGE AND STRUCTURES ENGINEER
Mike Clark 01/01
PROJECT DEVELOPMENT ENGINEER

Bridge Design Engr.	M:\BRIDGELIB\BDM\Chapter 2\Window files\S2B4.WND			STATE	FED. AID PROJ. NO.	SHEET NO.	TOTAL SHEETS	BRIDGE AND STRUCTURES OFFICE	Washington State Department of Transportation
Supervisor				10					
Designed By				WASH.					
Checked By				JOB NUMBER					PRELIMINARY PLAN
Detailed By									
Bridge Projects Engr.									
Prelim. Plan By									
Architect/Specialist	DATE	REVISION	BY	APPD					

BRIDGE SHEET NO. 1
SHEET OF SHEETS

JOB NO. 2-B-4
SR
SHEET

Fri Aug 25 11:04:57 2006

C.S. 0602 ~ PROJ. NO. 0126B7C ~ SOUTHWEST REGION ~ SALMON CREEK TO SR 205 ~ SR 5 ~ NE 129TH ST. BR. NO. 5/23 REPLACEMENT

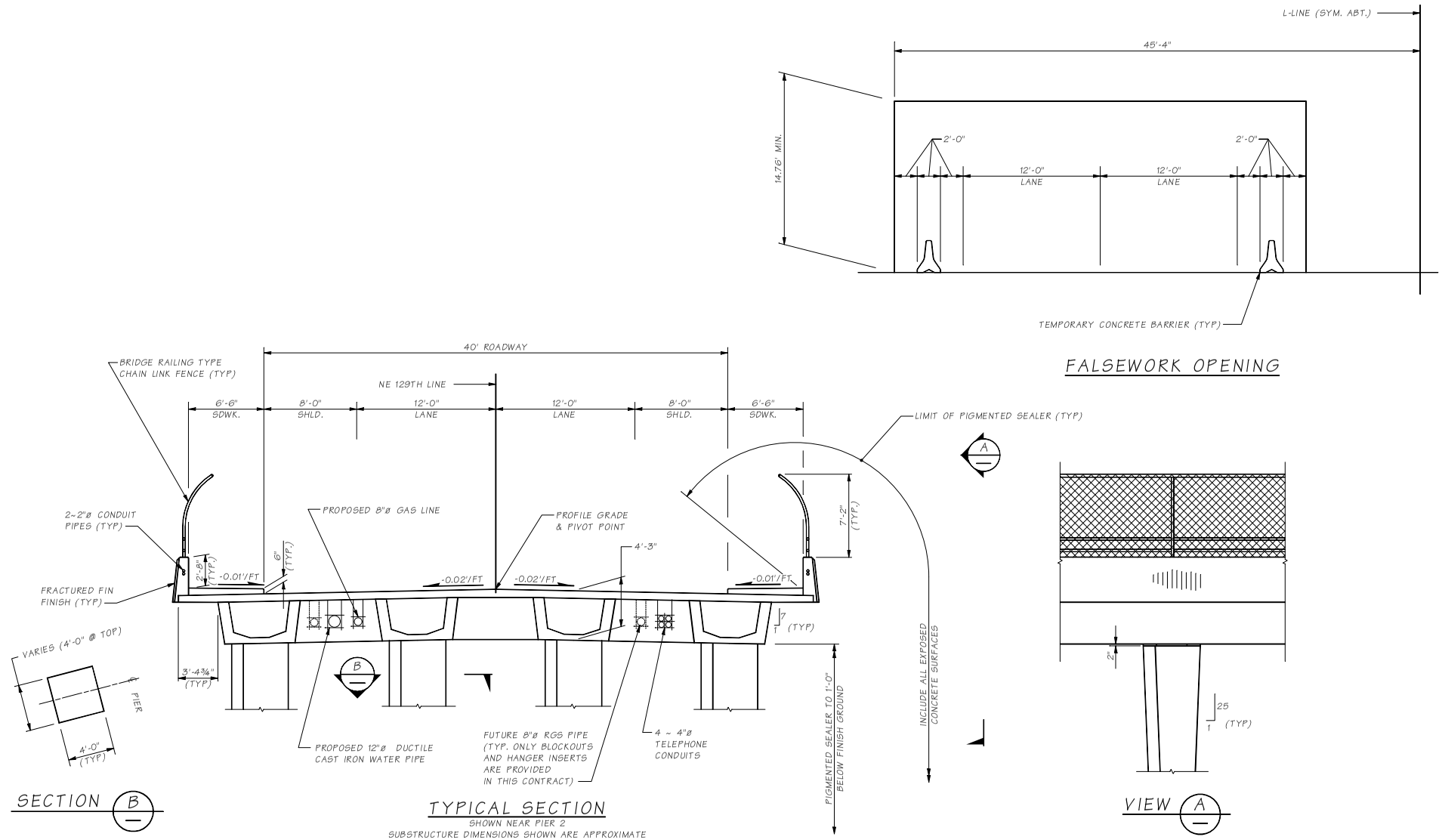

Bridge Design Engr.	M:\BRIDGELIB\BDM\Chapter 2\Window files\S2B5.WND			STATE	FED. AID PROJ. NO.	SHEET NO.	TOTAL SHEETS	BRIDGE AND STRUCTURES OFFICE	Washington State Department of Transportation
Supervisor				10 WASH.					
Designed By									
Checked By				JOB NUMBER					
Detailed By									
Bridge Projects Engr.									
Prelim. Plan By									
Architect/Specialist	DATE	REVISION	BY	APPD					

PRELIMINARY PLAN

BRIDGE SHEET NO. SHEET OF SHEETS

SR 5 JOB NO. 2-B-5 SHEET

C.S. 0602 ~ PROJ. NO. 0L2687C ~ SOUTHWEST REGION ~ SALMON CREEK TO SR 205 ~ SR 5 ~ NE 129TH ST. BR. NO. 5/23 REPLACEMENT

Fri Aug 25 11:04:52 2006

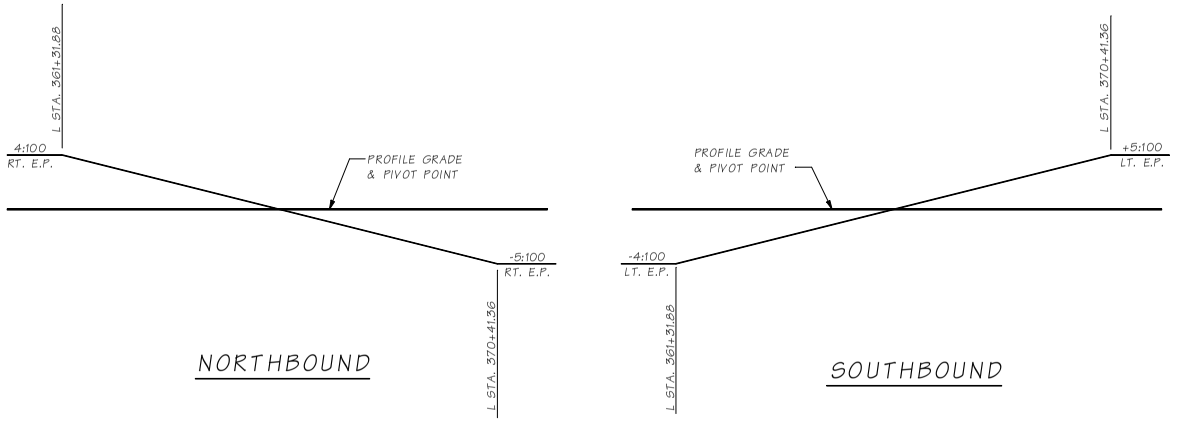

L-LINE
SUPERELEVATION DIAGRAM

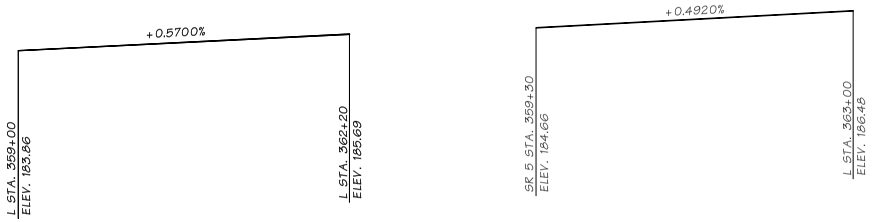

Bridge Design Engr.	M:\BRIDGELIB\BDM\Chapter 2\Window files\S2B6.WND			STATE	FED. AID PROJ. NO.	SHEET NO.	TOTAL SHEETS	BRIDGE AND STRUCTURES OFFICE	Washington State Department of Transportation
Supervisor									
Designed By			10	WASH.					
Checked By									
Detailed By			JOB NUMBER						
Bridge Projects Engr.									
Prelim. Plan By									
Architect/Specialist	DATE	REVISION	BY	APPD					PRELIMINARY PLAN

BRIDGE SHEET NO. 3
SHEET OF SHEETS

SR 5 JOB NO. 7202 SHEET 3 OF 3
2-B-6
Fri Aug 25 11:04:47 2006

C.S. 0602 ~ PROJ. NO. 012687 ~ SOUTHWEST REGION ~ SALMON CREEK TO SR 205 ~ SR 5 ~ NE 129TH ST. BR. NO. 5/23 REPLACEMENT

CURVE DATA					
P.I. STATION	Δ	RADIUS	TANGENT	LENGTH	BK. TANGENT BRG.
T1 10+51.02	29°00'00" LT.	800.00'	206.90'	404.92'	N 20°33'04" E
BP2 146+85.44	101°23'40" LT.	125.00'	152.71'	221.21'	S 66°09'27" E
BP2 147+99.54	07°43'32" LT.	200.00'	13.50'	26.97'	N 12°26'53" E
BP2 148+39.16	01°13'18" LT.	550.00'	5.86'	11.73'	N 04°43'22" E

PT. OF MIN. VERT. CLR.: A22 STA. 80+89.0 (67.0' LT) = BP2 STA. 147+63.0 (8.0' RT)
A22 STA. 80+51.6 (67.4' LT) = T1 STA. 9+51.0 (℄)

COAST GUARD LIAISON
COAST GUARD PERMIT NOT REQ'D
PERMIT TARGET DATE

BRIDGE WITH APPROACH FILLS
W74G P.C. GIRDERS
"A" DIMENSION = 11'8" (PRELIMINARY ~ NOT FOR DESIGN)
CAST-IN-PLACE CONC. SHALL BE 4000 PSI
DECK PROTECTIVE SYSTEM I (EPOXY COATED REBARS)

SEC. 12, T.20N., R.2E., W.M.
CITY OF TACOMA

SR 16

T1 LINE
TYLER STREET

A22 STA. 80+39.89 P.O.T. = T1 STA. 10+19.45 P.O.C.
A22 STA. 80+86.34 P.O.T. = BP2 STA. 148+19.83 P.O.T.

* CONNECTION TO CONC. SINGLE SLOPE BARRIER (TYP.)
** EXIST. DRAINAGE (TO BE REMOVED)

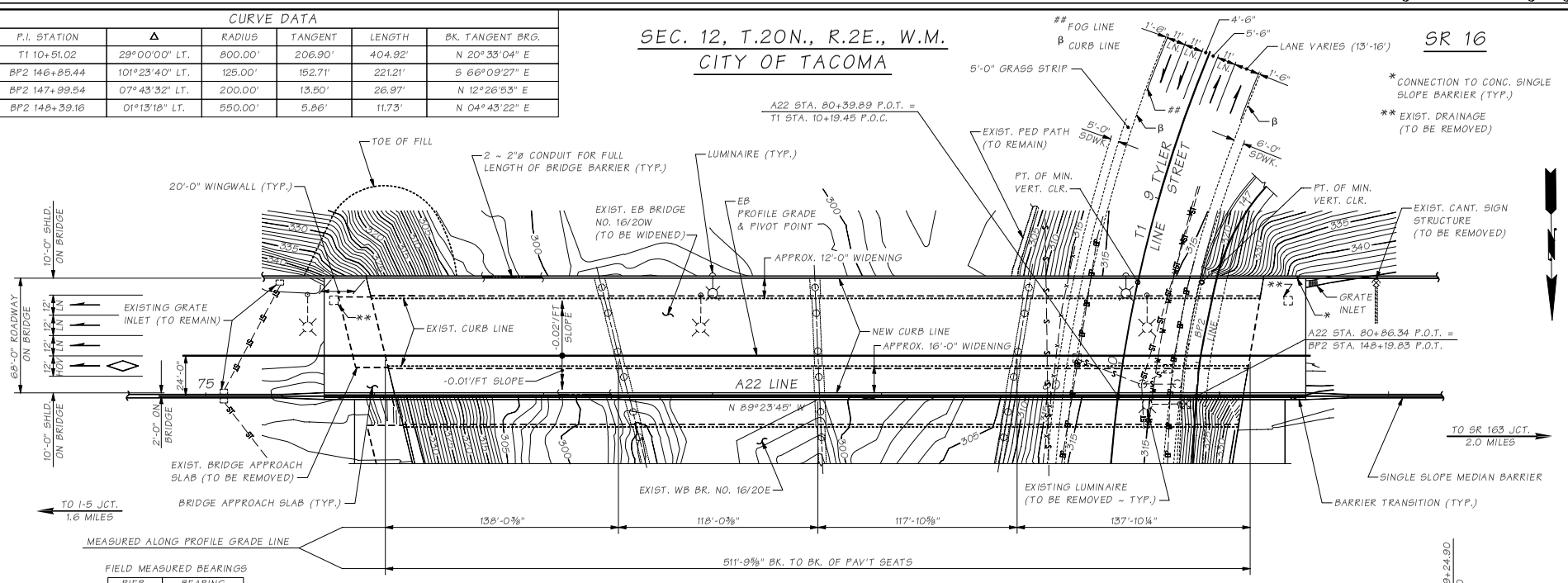

FIELD MEASURED BEARINGS

PIER	BEARING
1	N 13°05'04" W
2	N 13°12'10" W
3	N 01°46'13" W
4	N 10°18'06" E
5	N 10°23'00" E

PLAN ~ EB BRIDGE (16/20W) WIDENING

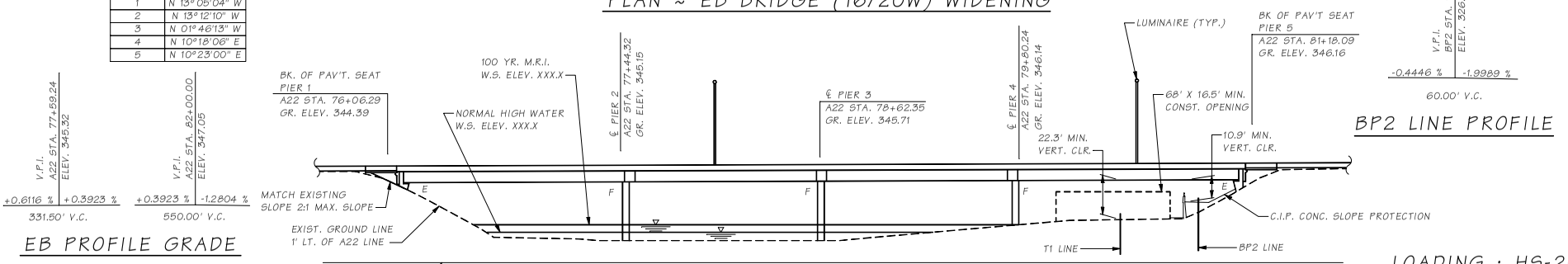

EB PROFILE GRADE

BP2 LINE PROFILE

PLAN APPROVED BY:

BRIDGE AND STRUCTURES ENGINEER

PROJECT DEVELOPMENT ENGINEER

DATUM
NAVD 1988

REFERENCE LINE ELEVATION 290.0

NOTE: 500 YR MRI W.S. ELEV. XXX.X

ELEVATION ~ EB BRIDGE (16/20W) WIDENING

SEE STD. PLAN H-9 FOR EMBANKMENT DETAILS AT BRIDGE ENDS. GRADE ELEVATIONS SHOWN ARE FINISH GRADES 24'-0" LT. OF A22 LINE AND ARE EQUAL TO THE PROFILE GRADE.

P.C. GIRDERS (W74G) WIDENING CONTINUOUS FOR LIVE LOAD

LOADING : HS-25 OR TWO 24 K AXLES @ 4' CTR'S

Bridge Design Engr.	M:\BRIDGELIB\BDM\Chapter 2\Window files\S2B7.WND			STATE	FED. AID PROJ. NO.	SHEET NO.	TOTAL SHEETS	BRIDGE AND STRUCTURES OFFICE
Supervisor				10 WASH.				Washington State Department of Transportation
Designed By								
Checked By				JOB NUMBER				
Detailed By								
Bridge Projects Engr.								
Prelim. Plan By								
Architect/Specialist	DATE	REVISION	BY	APPD				

SR 2-B-7 JOB NO. SHEET

Fri Aug 25 11:04:41 2006

C.S. 2784 ☐ PROJ. NO. XL1200 ☐ OLYMPIC REGION ☐ SR 16 ☐ UNION AVE. TO PEARL ST. ☐ SNAKE LAKE NORTH BRIDGE NO. 16/20W WIDENING

BRIDGE SHEET NO. | SHEET | OF | SHEETS

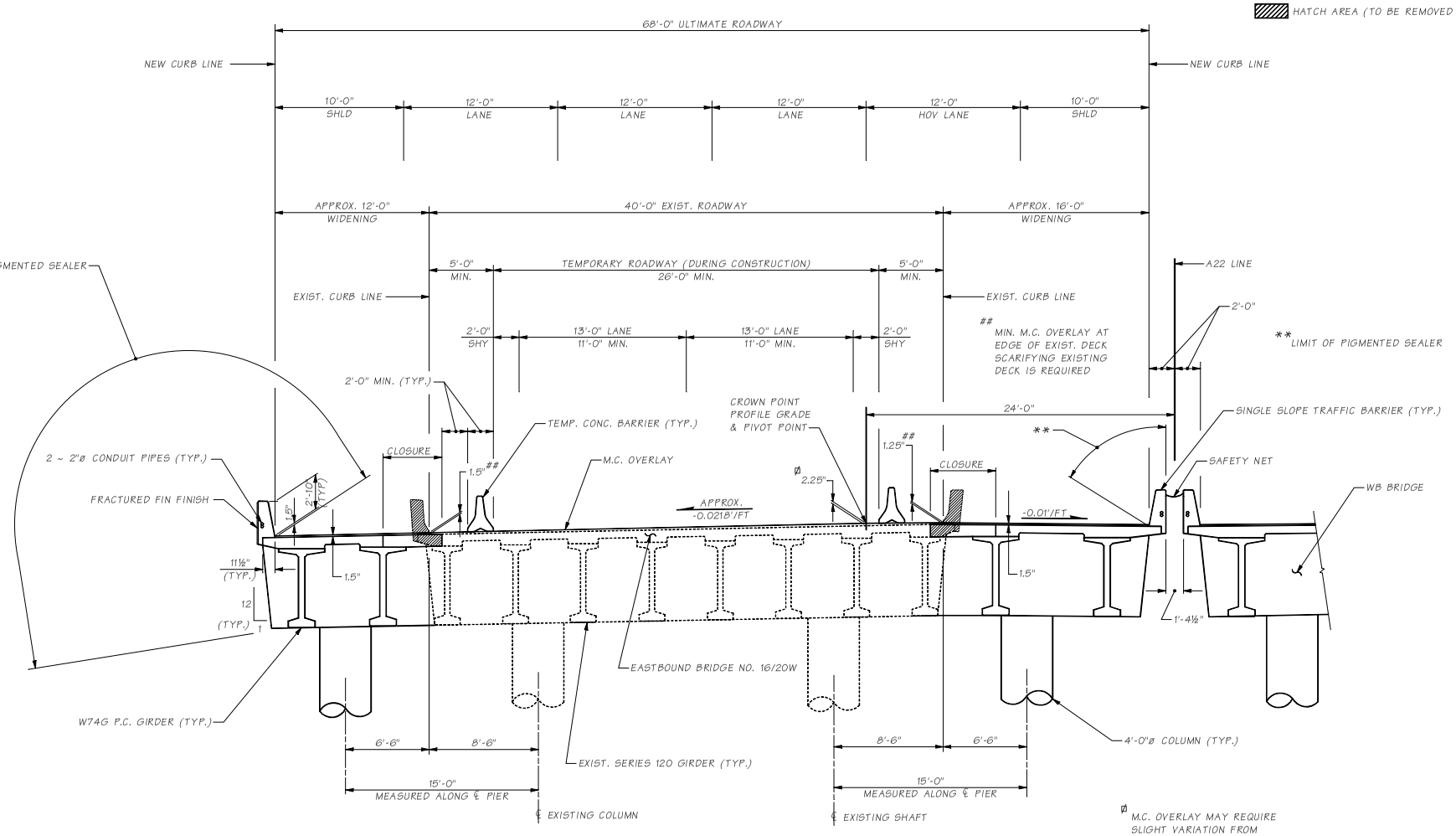

TYPICAL SECTION ~ EB BRIDGE

SHOWN NEAR INTERMEDIATE PIER 3
SUBSTRUCTURE DIMENSIONS ARE APPROXIMATE
HORIZONTAL DIMENSIONS MEASURED PERPENDICULAR TO A22 LINE (UNLESS OTHERWISE NOTED)

Bridge Design Engr.	M:\BRIDGELIB\BDM\Chapter 2\Window files\S2B8.WND				REGION NO.	STATE	FED. AID PROJ. NO.	SHEET NO.	TOTAL SHEETS	BRIDGE AND STRUCTURES OFFICE
Supervisor					10	WASH.				Washington State Department of Transportation
Designed By					JOB NUMBER					PRELIMINARY PLAN
Checked By										
Detailed By										
Bridge Projects Engr.										
Prelim. Plan By										
Architect/Specialist	DATE	REVISION	BY	APP'D						

BRIDGE SHEET NO. 2
SHEET OF SHEETS

SR ___ JOB NO. ___ SHEET ___
2-B-8

Fri Aug 25 11:04:35 2006

C.S. 2784 ☐ PROJ. NO. XL1200 ☐ OLYMPIC REGION ☐ SR 16 ☐ UNION AVE. TO PEARL ST. ☐ SNAKE LAKE NORTH BRIDGE NO. 16/20W WIDENING

EXISTING EB BRIDGE ELEVATIONS

A22 STA.	LT. OFFSET	ELEVATION	LT. OFFSET	ELEVATION
75+98.05			57.84	343.56
76+00.00			57.85	343.57
76+07.79	17.85	344.40		
76+10.00	17.85	344.41	57.87	343.64
76+20.00	17.88	344.45	57.89	343.70
76+30.00	17.91	344.50	57.87	343.75
76+40.00	17.92	344.55	57.85	343.79
76+50.00	17.91	344.61	57.83	343.84
76+60.00	17.89	344.66	57.84	343.90
76+70.00	17.89	344.72	57.85	343.96
76+80.00	17.90	344.77	57.87	344.02
76+90.00	17.90	344.82	57.85	344.08
77+00.00	17.90	344.88	57.84	344.14
77+10.00	17.91	344.93	57.83	344.20
77+20.00	17.91	344.99	57.83	344.25
77+30.00	17.91	345.04	57.84	344.30
77+40.00	17.90	345.09	57.85	344.35
77+50.00	17.90	345.14	57.85	344.40
77+60.00	17.89	345.19	57.82	344.44
77+70.00	17.89	345.24	57.80	344.48
77+80.00	17.89	345.29	57.79	344.52
77+90.00	17.89	345.33	57.80	344.56
78+00.00	17.89	345.38	57.80	344.60
78+10.00	17.88	345.42	57.81	344.64
78+20.00	17.88	345.47	57.82	344.69
78+30.00	17.88	345.51	57.82	344.74
78+40.00	17.88	345.54	57.83	344.78
78+50.00	17.89	345.58	57.84	344.80
78+60.00	17.89	345.62	57.85	344.82
78+70.00	17.89	345.67	57.86	344.83
78+80.00	17.88	345.71	57.86	344.90
78+90.00	17.87	345.76	57.85	344.96
79+00.00	17.88	345.80	57.84	345.02
79+10.00	17.88	345.85	57.84	345.07
79+20.00	17.89	345.90	57.84	345.11
79+30.00	17.89	345.94	57.83	345.15
79+40.00	17.90	345.97	57.83	345.19
79+50.00	17.90	346.01	57.83	345.23
79+60.00	17.90	346.04	57.84	345.26
79+70.00	17.90	346.07	57.84	345.30
79+80.00	17.90	346.09	57.85	345.32
79+90.00	17.90	346.11	57.86	345.35
80+00.00	17.90	346.12	57.86	345.37
80+10.00	17.90	346.13	57.84	345.39
80+20.00	17.90	346.14	57.82	345.41
80+30.00	17.91	346.13	57.80	345.42
80+40.00	17.91	346.12	57.82	345.42
80+50.00	17.92	346.11	57.83	345.43
80+60.00	17.92	346.11	57.85	345.43
80+70.00	17.91	346.13	57.85	345.42
80+80.00	17.90	346.14	57.84	345.41
80+90.00	17.90	346.14	57.84	345.40
81+00.00	17.90	346.13	57.82	345.38
81+10.00	17.91	346.12	57.80	345.37
81+17.04	17.91	346.11		
81+20.00			57.78	345.36
81+23.91			57.77	345.36

TYLER STREET ROADWAY ELEVATIONS

LT. OFFSET	ELEVATION	RT. OFFSET	ELEVATION	LT. OFFSET	ELEVATION	RT. OFFSET	ELEVATION
27.07	315.03	27.08	315.02	4.93	315.50	4.63	315.54
27.06	314.98	27.09	314.96	4.94	315.44	4.63	315.48
27.05	314.93	27.10	314.90	4.94	315.37	4.63	315.42
27.05	314.88	27.12	314.86	4.94	315.33	4.65	315.38
27.05	314.83	27.13	314.84	4.93	315.32	4.71	315.37
27.04	314.78	27.15	314.82	4.92	315.30	4.76	315.36
27.04	314.74	27.16	314.79	4.91	315.29	4.82	315.35
27.04	314.69	27.18	314.77	4.90	315.27	4.88	315.34
27.04	314.65	27.20	314.75	4.90	315.26	4.93	315.33
27.01	314.52				-	-	-
27.01	314.49				-	-	-
27.15	314.53	27.21	314.73	4.93	315.25	4.97	315.32
27.81	314.61	27.20	314.77	4.98	315.26	4.95	315.35
28.36	314.64	27.22	314.80	4.96	315.29	4.92	315.38
28.91	314.68	27.24	314.83	4.93	315.33	4.90	315.41
29.47	314.71	27.25	314.87	4.90	315.36	4.88	315.44
30.02	314.74	27.27	314.90	4.88	315.40	4.85	315.46
30.58	314.77	27.28	314.93	4.85	315.44	4.83	315.50
31.13	314.80	27.26	314.99	4.82	315.47	4.83	315.54
31.68	314.86	27.23	315.04	4.82	315.52	4.83	315.59
32.22	314.91	27.20	315.10	4.84	315.57	4.83	315.64
32.77	314.97	27.17	315.15	4.85	315.62	4.82	315.69
33.32	315.02	27.15	315.21	4.86	315.67	4.82	315.74
33.86	315.08	27.15	315.26	4.88	315.72	4.82	315.80
34.41	315.13	27.16	315.32	4.89	315.78	4.80	315.88
34.94	315.18	27.16	315.37	4.89	315.85	4.79	315.97

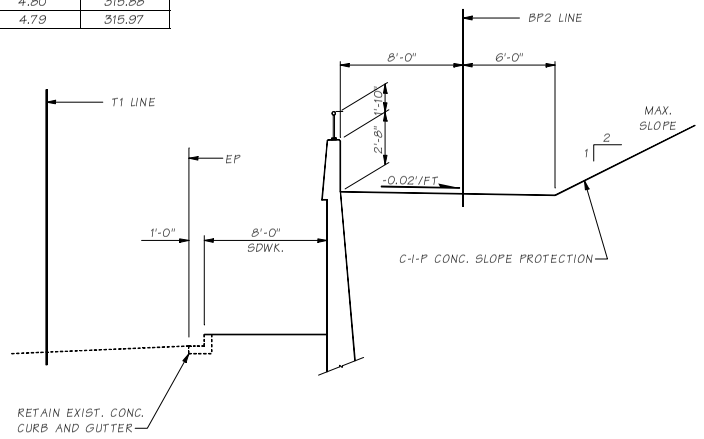

BP2 LINE UNDER EB BRIDGE (16/20W)

Bridge Design Engr.	M:\BRIDGELIB\BDM\Chapter 2\Window files\S2B9.WND			STATE	FED. AID PROJ. NO.	SHEET NO.	TOTAL SHEETS
Supervisor							
Designed By				10 WASH			
Checked By							
Detailed By				JOB NUMBER			
Bridge Projects Engr.							
Prelim. Plan By							
Architect/Specialist	DATE	REVISION	BY	APPD			

BRIDGE AND STRUCTURES OFFICE

Washington State Department of Transportation

BRIDGE SHEET NO. SHEET OF SHEETS

SR JOB NO. SHEET

C.S. 2704 ☐ PROJ. NO. XL1200 ☐ OLYMPIC REGION ☐ SR 16 ☐ UNION AVE. TO PEARL ST. ☐ SNAKE LAKE NORTH BRIDGE NO. 16/20W WIDENING

Fri Aug 25 11:05:20 2006

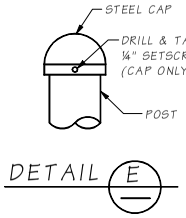

DETAIL E

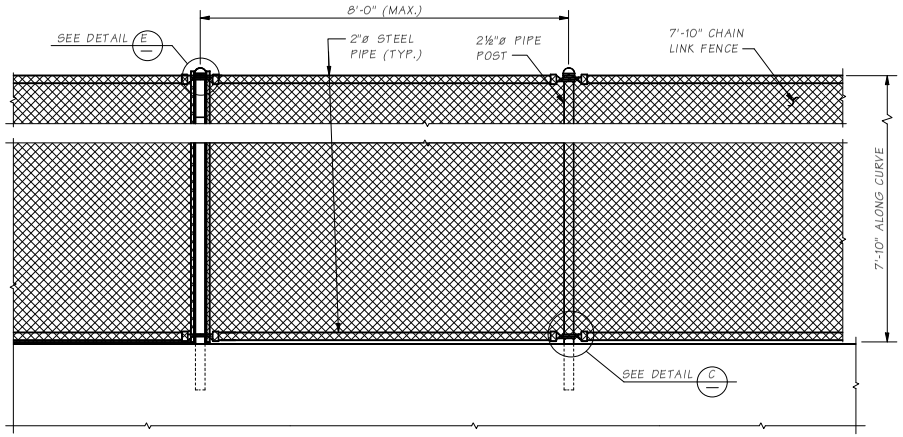

ELEVATION

PROTECTIVE SCREENING NOTES

ALL ELEMENTS OF FENCE SHALL BE HOT DIPPED GALVANIZED AFTER FABRICATION.

STEEL PIPES FOR POSTS AND LONGITUDINAL MEMBERS SHALL CONFORM TO ASTM SPECIFICATION A53 GRADE B GALV. PER AASHTO M 111.

ALL HARDWARE SHALL CONFORM TO AASHTO SPECIFICATION M 183 GALV. PER AASHTO M 111 & M232 UNLESS NOTED OTHERWISE.

FABRIC SHALL BE HEAVY DUTY ALUMINUM OF #9 GAGE WIRE WOVEN IN A 50 CHAIN LINK DIAMOND MESH.

FABRIC TIES SHALL BE INSTALLED TO ALL FRAMES IN ACCORDANCE WITH GOOD TRADE PRACTICES AT 355 CENTERS MAXIMUM SPACING.

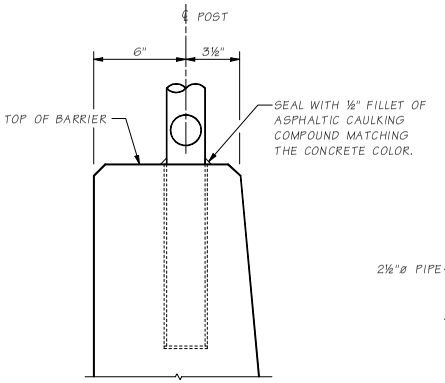

DETAIL B

NOTE: PLUG SLEEVE TO PREVENT INFILTRATION DURING CASTING OF CONRETE.

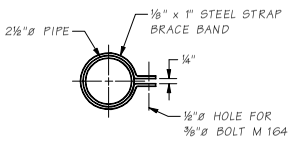

BRACE BAND

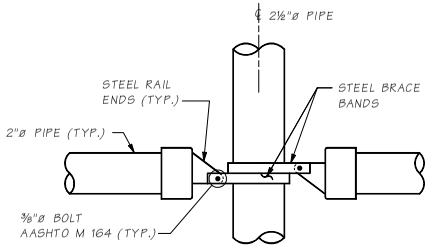

DETAIL C

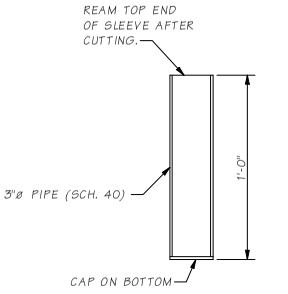

SLEEVE DETAIL

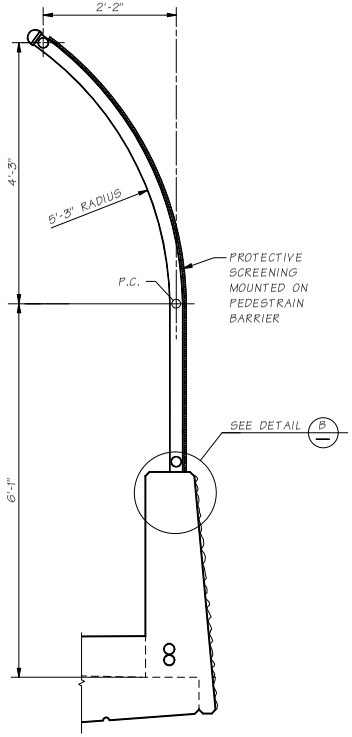

TYPICAL SECTION
PROTECTIVE SCREEN

Bridge Design Engr.	M:\STANDARDS\Traffic Barriers\Pedestrian Barrier\THROW FENCE.MAN				REGION NO.	STATE	FED. AID PROJ. NO.	SHEET NO.	TOTAL SHEETS
Supervisor					10	WASH.			
Designed By					JOB NUMBER				
Checked By									
Detailed By									
Bridge Projects Engr.									
Prelim. Plan By									
Architect/Specialist	DATE	REVISION	BY	APP'D					

BRIDGE AND STRUCTURES OFFICE

Washington State Department of Transportation

PROTECTIVE SCREENING DETAILS

BRIDGE SHEET NO. / SHEET / OF / SHEETS

SR ____ JOB NO. ____ SHEET ____

2.3-B2-1

Fri Feb 08 12:52:12 2008

Chapter 3 Loads Contents

3.1	**Scope**	3.1-1
3.2	**Definitions**	3.2-1
3.3	**Load Designations**	3.3-1
3.4	**Limit States**	3.4-1
3.5	**Load Factors and load combinations**	3.5-1
3.5.1	Load Factors for Substructure	3.5-2
3.6	**Loads and Load factors for construction**	3.6-1
3.7	**Load factors for Post-tensioning**	3.7-1
3.7.1	Post-tensioning Effects from Superstructure	3.7-1
3.7.2	Secondary Forces from Post-Tensioning, PS	3.7-1
3.8	**Permanent Loads**	3.8-i
3.8.1	Deck Overlay Requirement	3.8-i
3.9	**Live Loads**	3.9-1
3.9.1	Live Load Designation	3.9-1
3.9.2	Live Load Analysis of Continuous Bridges	3.9-1
3.9.3	Loading for Live Load Deflection Evaluation	3.9-1
3.9.4	Distribution to Superstructure	3.9-1
3.10	**Pedestrian Loads**	3.10-1
3.11	**Wind Loads**	3.11-1
3.11.1	Wind Load to Superstructure	3.11-1
3.11.2	Wind Load to Substructure	3.11-1
3.11.3	Wind on Noise Walls	3.11-1
3.12	**Noise Barriers**	3.12-1
3.13	**Earthquake Effects**	3.13-1
3.14	**Earth Pressure**	3.14-1
3.15	**Force Effects due to superimposed deformations**	3.15-1
3.16	**Other Loads**	3.16-1
3.16.1	Buoyancy	3.16-1
3.16.2	Collision Force on Bridge Substructure	3.16-1
3.16.3	Collision Force on Traffic Barrier	3.16-1
3.16.4	Force from Stream Current, Floating Ice, and Drift	3.16-1
3.16.5	Ice Load	3.16-1

3.99 Bibliography 3.99-1

Appendix A
Appendix 3.1-A1 Torsional Constants of Common Sections 3.1-A1-1

Appendix B
Appendix 3.1-B1 HL-93 Loading for Bridge Piers 3.1-B1-1

Chapter 3 Loads

3.1 Scope

AASHTO Load and Resistance Factor Design (LRFD) Specifications shall be the minimum design criteria used for all bridges except as modified herein.

3.2 Definitions

The definitions in this section supplement those given in LRFD Section 3.

Permanent Loads – Loads and forces that are, or are assumed to be, either constant upon completion of construction or varying only over a long time interval.

Transient Loads – Loads and forces that can vary over a short time interval relative to the lifetime of the structure.

3.3 Load Designations

Load designations follow LRFD Article 3.3.2 with the addition of:

PS = secondary forces from post-tensioning

3.4 Limit States

The basic limit state equation is as follows:

$$\Sigma\eta_i\gamma_i Q_i \leq \phi R_n$$

where:

η_i = Limit State load modifier factor for ductility, redundancy, and importance of structure
γ_i = Load factor
Q_i = Load (i.e., dead load, live load, seismic load, etc.)
ϕ = Resistance factor
R_n = Nominal or ultimate resistance

This equation states that the force effects are multiplied by factors to account for uncertainty of in loading, structural ductility, operational importance, and redundancy, must be less than or equal to the available resistance multiplied by factors to account for variability and uncertainty in the materials and construction.

Use a value of 1.0 for η_i except for the design of columns when a minimum value of γ_i is appropriate. In such a case, use $\eta_i = 0.95$. Columns in seismic designs are proportioned and detailed to ensure the development of significant and visible inelastic deformations at the extreme event limit states before failure.

3.5 Load Factors and load combinations

The limit states load combinations, and load factors (γ_i used for structural design are in accordance with the LRFD, Table 3.4.1-1. and BDM Table 3.5-1. For foundation design, loads are factored after distribution through structural analysis or modeling.

Load Combination Limit State	DC DD DW EH EV ES EL **CR SH PS**	LL IM CE BR PL LS	WA	WS	WL	FR	TU	TG	SE	Use One of These at a Time			
										EQ	IC	CT	CV
Strength-I	γ_p	1.75	1.00	–	–	1.00	0.5/1.20	γ_{TG}	γ_{SE}	–	–	–	–
Strength-II	γ_p	1.35	1.00	–	–	1.00	0.5/1.20	γ_{TG}	γ_{SE}	–	–	–	–
Strength-III	γ_p	–	1.00	1.40	–	1.00	0.5/1.20	γ_{TG}	γ_{SE}	–	–	–	–
Strength-IV	γ_p	–	1.00	–	–	1.00	0.5/1.20	–	–	–	–	–	–
Strength-V	γ_p	1.35	1.00	0.40	1.00	1.00	0.5/1.20	γ_{TG}	γ_{SE}	–	–	–	v
Extreme Event-I	γ_p	γ_{EQ} =0.5	1.00	–	–	1.00	–	–	–	1.00	–	–	–
Extreme Event-II	γ_p	0.5	1.00	–	–	1.00	–	–	–	–	1.00	1.00	1.00
Service-I	1.00	1.00	1.00	0.30	1.00	1.00	1.00/1.20	γ_{TG}	γ_{SE}	–	–	–	–
Service-II	1.00	1.30	1.00	–	–	1.00	1.00/1.20	–	–	–	–	–	–
Service-III	1.00	0.80	1.00	–	–	1.00	1.00/1.20	γ_{TG}	γ_{SE}	–	–	–	–
Service-IV	1.00	–	1.00	0.70	–	1.00	1.00/1.20	–	1.00	–	–	–	–
Fatigue-LL, IM and CE only	–	0.75	–	–	–	–	–	–	–	–	–	–	–

Load Combinations and Load Factors
Table 3.5-1

The live load factor for Extreme Event-I Limit State load combination, γ_{EQ} as specified in the BDM Table 3.5.1 for all WSDOT bridges shall be taken equal to 0.50. The γ_{EQ} factor applies to the live load force effect obtained from the bridge live load analysis. Associated mass of live load need not be included in the dynamic analysis.

The AASHTO *LRFD Specifications* allow the live load factor in Extreme Event-I load combination, γ_{EQ}, be determined on a project specific basis. The commentary indicates that the possibility of partial live load, i.e., $\gamma_{EQ} < 1.0$, with earthquakes should be considered. The application of Turkstra's rule for combining uncorrelated loads indicates that $\gamma_{EQ} = 0.50$ is reasonable for a wide range of values of average daily truck traffic (ADTT). The NCHRP Report 489 recommends live load factor for Extreme Event-I Limit State, γ_{EQ} equal to 0.25 for all bridges. This factor shall be increased to γ_{EQ} equal to 0.50 for bridges located in main state routes and congested roads.

Since the determination of live load factor, γ_{EQ} based on ADTT or based on bridges located in congested roads could be confusing and questionable, it is decided that live load factor of γ_{EQ} equal to 0.50 to be used for all WSDOT bridges regardless the bridge location or congestion.

The load factors γ_{TG} and γ_{SE} are to be determined on a project specific basis in accordance with Articles 3.4.1 and 3.12 of the *LRFD Specifications*. Load Factors for Permanent Loads, γ_p are provided in LRFD Table 3.4.1-2.

The load factor for downdrag loads shall be as specified in the AASHTO specifications Table 3.4.1-2. The Geotechnical Report will provide the down drag force (DD). The down drag force (DD) is a load applied to the pile/shaft with the load factor specified in the Geotechnical Report. Generally, live loads (LL) are less than the down drag force and should be omitted when considering down drag forces. In other words, the live loads reduce down drag forces and are ignored for the structural design. The WSDOT BDM Section 8.6.2 provides a more in-depth discussion of Down Drag.

The Load Factors for Superimposed Deformations, γ_p are provided in Table 3.5-3.

	PS	CR, SH
Superstructure	1.0	1.0
Fixed (bottom) substructure supporting Superstructure (using I_g only)	0.5	0.5
All other substructure supporting Superstructure (using I_g or $I_{effective}$)	1.0	1.0

Load factors for Superimposed Deformations
Table 3.5-3

3.5.1 Load Factors for Substructure

Table 3.5-4 provides general guidelines for when to use the maximum or minimum shaft/pile/column permanent load factors for axial capacity, uplift, and lateral loading.

In general, substructure design should use unfactored loads to obtain force distribution in the structure, and then factor the resulting moment and shear for final structural design. All forces and load factors are as defined previously.

Axial Capacity	Uplift	Lateral Loading
DC_{max}, DW_{max}	DC_{min}, DW_{min}	DC_{max}, DW_{max}
DC_{max}, DW_{max} for causing shear	DC_{max}, DW_{max} for causing shear	DC_{max}, DW_{max} causing shear
DC_{min}, DW_{min} for resisting shear	DC_{min}, DW_{min} for resisting shear	DC_{min}, DW_{min} resisting shear
DC_{max}, DW_{max} for causing moments	DC_{max}, DW_{max} for causing moments	DC_{max}, Dw_{max} for causing moments
DC_{min}, DW_{min} for resisting moments	DC_{min}, DW_{min} for resisting moments	DC_{min}, DW_{min} for resisting moments
EV_{max}	EV_{min}	EV_{max}
DD = varies	DD = varies	DD = varies
EH_{max}	EH_{max} if causes uplift	EH_{max}

Minimum/Maximum Substructure Load Factors for Strength Limit State
Table 3.5-4

In the table above “causing moment” and “causing shear” are taken to be the moment and shear causing axial, uplift, and lateral loading respectively. “Resisting” is taking to mean those force effects that are diminishing axial capacity, uplift, and lateral loading.

3.6 Loads and Load factors for construction

Unless otherwise specified, the load factor for construction loads and for any associated dynamic effects shall not be less than 1.5 in Strength I. The load factor for wind in Strength III shall not be less than 1.25.

When investigating Strength Load Combinations I, III, and V during construction, load factors for the weight of the structure and appurtenances, *DC* and *DW*, shall not be taken to be less than 1.25.

Where evaluation of construction deflections are required by the contract documents, Load Combination Service I shall apply. Construction dead loads shall be considered as part of the permanent load and construction transient loads considered part of the live load. The associated permitted deflections shall be included in the contract documents.

For falsework and formwork design loads, see standard specifications 6-02.3(17)A.

3.7 Load factors for Post-tensioning

3.7.1 Post-tensioning Effects from Superstructure

When cast-in-place, post-tensioned superstructure is constructed monolithic with the piers, the substructure design should take into account frame moments and shears caused by elastic shortening and creep of the superstructure upon application of the axial post-tensioning force at the bridge ends. Frame moments and shears thus obtained should be added algebraically to the values obtained from the primary and secondary moment diagrams applied to the superstructure.

When cast-in-place, post-tensioned superstructure are supported on sliding bearings at some of the piers, the design of those piers should include the longitudinal force from friction on the bearings generated as the superstructure shortens during jacking. When post-tensioning is complete, the full permanent reaction from this effect should be included in the governing AASHTO load combinations for the pier under design.

3.7.2 Secondary Forces from Post-Tensioning, PS

The application of post-tenstioning forces on a continuous structure produces reactions at the structure's support and internal forces that are collectively called secondary forces.

Secondary prestressing forces (i.e. secondary moments) are the force effects in continuous members, as a result of continuous post-tensioning. In frame analysis software, the secondary moments are generally obtained by subtracting the primary ($P*e$) from the total PS moments. Whether or not this is appropriate when using linear-elastic analysis is debatable, but accepted for lack of a better method. A load factor, γ_{PS}, of 1.0 is appropriate for the superstructure. For fixed columns a 50% reduction in PS force effects could be used given the elasto-plastic characteristics of the soil surrounding the foundation elements.

3.8 Permanent Loads

The design unit weights of common permanent loads are provided in Table 3.8-1.

ITEM	LOAD
Reinforced Concrete	160 lb/ft^3
Concrete Overlay	150 lb/ ft^3
Stay-in-Place Form for Box Girder (applied to slab area less overhangs and webs)	5 lb/ft^2
Traffic Barrier (32” - F Shape)	470 lb/ft
Traffic Barrier (42” - F Shape)	730 lb/ft
Traffic Barrier (34” – Single Slope)	505 lb/ft
Traffic Barrier (42” – Single Slope)	690 lb/ft
Wearing Surface – Asphalt Concrete Pavement (ACP)	125 lb/ft^3
Wearing Surface – Hot Mix Asphalt (HMA)	140 lb/ft^3
Soil, Compact	125 lb/ft^3

Permanent Loads
Table 3.8-1

3.8.1 Deck Overlay Requirement

Vehicular traffic will generate wear and rutting on a concrete bridge deck over the life of a bridge. One option to correct excessive wear is to add a Hot Mix Asphalt (HMA) overlay on top of the existing concrete deck. This type of overlay requires less construction time and is less expensive compared to removing a portion of the deck and adding a modified concrete overlay. The initial bridge design needs to incorporate the future overlay dead load.

Concrete bridge deck protection systems shall be in accordance with the requirements of BDM Section 5.7.4 for new bridge construction and widening projects. To accommodate a future deck overlay, bridges shall be designed as shown in the following Table.

Superstructure Type	Concrete Cover	Overlay shown in the plan	Future Design Overlay
System 1: • Precast concrete, steel I or box girder with cast-in-place slab • Precast slabs with cast-in-place slab • Reinforced and post-tensioned box beams and slab bridges • Mainline Bridges on State Routes	2 ½" (Including ½" wearing surface)	None	2" HMA
System 1: • Undercrossing bridge that carries traffic from a city street or county road • Bridges with raised sidewalks	2 ½" (Including ½" wearing surface)	None	None
System 2: • Decks of segmental bridges with transverse post-tensioning	1 ¾" (Including ¼" wearing surface)	1 ½" Modified Concrete Overlay	None
System 3: • Deck bulb tees, Double tees and tri-beams	2"	3" HMA	None

Bridge Overlay Requirements
Table 3.8-2

The effect of the future deck overlay on girders camber, "A" dimension, creep, and profile grade need not be considered in superstructure design.

Deck overlay may be required at the time of original construction for some bridge widening or staged construction projects if ride quality is a major concern.

3.9 Live Loads

3.9.1 Live Load Designation

Live load design criteria are specified in the lower right corner of the bridge preliminary plan sheet. The Bridge Projects Unit determines the criteria using the following guideline:

- New bridges and Bridge widening with addition of substructure – HL-93
- Bridge superstructure widening with no addition of substructure – Live load criteria of the original design
- Detour and other temporary bridges – 75% of HL-93

3.9.2 Live Load Analysis of Continuous Bridges

The HL-93 live load model defined in the *LRFD specifications* includes a dual truck train for negative moments and reactions and interior piers. The application of the dual truck train is somewhat unclear as specified in LRFD Article 3.6.1.3.1. WSDOT interprets that article as follows:

For negative moment between the points of contraflexure under a uniform load on all spans, shear, and reactions at interior piers only, 90 percent of the effect of two design trucks spaced a minimum of 50.0 ft. between the rear axle of the lead truck and the lead axle of the rear truck, combined with 90 percent of the effect of the design lane load. The distance between the 32.0-kip axles of each truck shall be taken as 14.0 ft. The two design trucks shall be placed in different spans in such position to produce maximum force effect.

Negative moment, shear, and reactions at interior supports shall be investigated a dual design tandem spaced from 26.0 ft. to 40.0 ft apart, combined with the design lane load specified in LRFD Article C3.6.1.3.1. For the purpose of this article, the pairs of the design tandem shall be placed in different spans in such position to produce maximum force effect.

3.9.3 Loading for Live Load Deflection Evaluation

The loading for live load deflection criteria is defined in LRFD Article 3.6.1.3.2. Live load deflections for the Service I limit state shall satisfy the requirements of LRFD 2.5.2.6.2.

3.9.4 Distribution to Superstructure

A. Multi Girder Superstructure

The live load distribution factor for exterior girder of multi girder bridges shall be as follows:

- For exterior girder design with slab cantilever length equal or less than one-half of the adjacent interior girder spacing, use the live load distribution factor for interior girder. The slab cantilever length is defined as the distance from the centerline of the exterior girder to the edge of the slab.
- For exterior girder design with slab cantilever length exceeding one-half of the adjacent interior girder spacing, use the lever rule with the multiple presence factor of 1.0 for single lane to determine the live load distribution. The live load used to design the exterior girder shall not be less than the live load used for the adjacent interior girder.
- The special analysis based on the conventional approximation of loads on piles as described in LRFD Article C4.6.2.2.2d shall not be used unless the effectiveness of diaphragms on the lateral distribution of truck load is investigated.

B. Concrete Box Girders

The load distribution factor for multi-cell cast in place concrete box girders shall be per *LRFD Specifications* for interior girders from Table 4.6.2.2.2b-1 for bending moment, and Table 4.6.2.2.3a-1 for shear. The live load distribution factor for interior girders shall then be multiplied by the number of webs to obtain the design live load for the entire superstructure. The correction factor for live load distribution for skewed support as specified in Tables 4.6.2.2.2e-1 for bending moment and 4.6.2.2.3c-1 for shear shall be considered.

$DF = N_b$ x Df_i Live load distribution factor for multi-cell box girder

Where:

Df_i = Live load distribution factor for interior web

N_b = Number of webs

C. Multiple Presence Factors

A reduction factor will be applied in the substructure design for multiple loadings in accordance with AASHTO.

D. Distribution to Substructure

The number of traffic lanes to be used in the substructure design shall be determined by dividing the entire roadway slab width by 12. No fractional lanes shall be used. Roadway slab widths of less than 24 feet shall have a maximum of two design lanes.

E. Distribution to Crossbeam

The HL-93 loading is distributed to the substructure by placing wheel line reactions in a lane configuration that generates the maximum stress in the substructure. A wheel line reaction is ½ of the HL-93 reaction. Live loads are considered to act directly on the substructure without further distribution through the superstructure as illustrated in Table 3.9-1. Normally, substructure design will not consider live load torsion or lateral distribution. Sidesway effects may be accounted for and are generally included in computer generated frame analysis results.

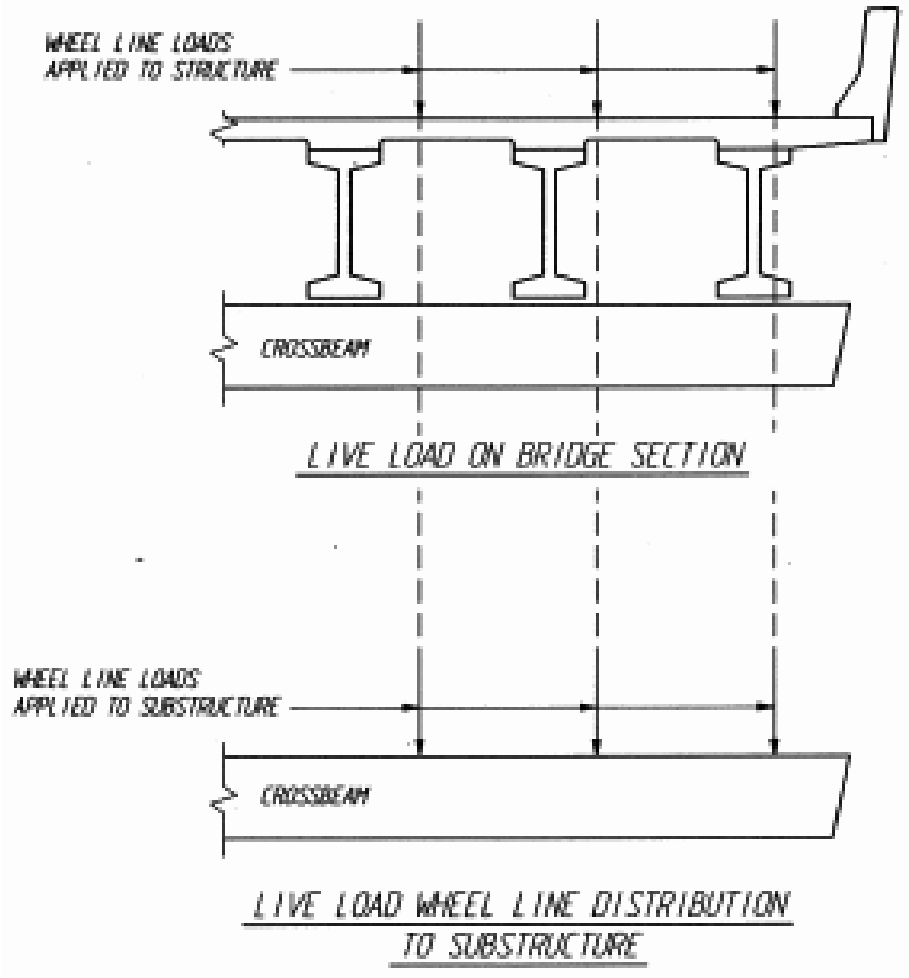

Live Load Distribution to Substructure
Table 3.9-1

For steel and prestressed concrete superstructure where the live load is transferred to substructure through bearings, cross frames or diaphragms, the girder reaction may be used for substructure design. Live load placement is dependant on the member under design. Some examples of live load placement are as follows. The exterior vehicle wheel is placed 2 feet from the curb for maximum crossbeam cantilever moment or maximum eccentric foundation moment.

For crossbeam design between supports, the HL-93 lanes are placed to obtain the maximum moment in the member; then re-located to obtain the maximum shear or negative moment in the member.

For column design, the design lanes are placed to obtain the maximum transverse moment at the top of the column; then re-located to obtain the maximum axial force of the column.

3.10 Pedestrian Loads

A pedestrian load of 0.075 ksf shall be applied to all sidewalks wider than 2.0 ft and considered simultaneously with the vehicular design live load. For purposes of determining the number of lanes loaded when combined with one or more lanes of vehicular live load, the pedestrian loads may be taken to be one loaded lane.

Bridges for only pedestrian and/or bicycle traffic shall be designed for a live load of 0.085 ksf.

Where sidewalks, pedestrian, and/or bicycle bridges are intended to be used by maintenance and/or other incidental vehicles, these loads shall be considered in the design. The dynamic load allowance need not be considered for these vehicles and shall not be considered concurrently with the pedestrian load.

The maintenance vehicle live load shall be:

Sidewalk Width	**Truck**
Less than 6 ft	N/A
6ft – 10ft	H-5
Greater than 10ft	H-10 UBIT Load (consult the BPO engineer for details)

When a future bridge widening is anticipated, the exterior girders shall be designed with the sidewalk removed and the full live load considered.

3.11 Wind Loads

3.11.1 Wind Load to Superstructure

For the usual girder and slab bridges with less than 30 ft height above ground, the following simplified wind pressure on structure (WS), could be used in lieu of the general method described in LRFD Article 3.8.1.2:

- 0.05 kip per square foot, transverse
- 0.012 kip per square foot, longitudinal

Both forces shall be applied simultaneously.

For the usual girder and slab bridges with less than 30 ft height above ground, the following simplified wind pressure on vehicle (WL), could be used in lieu of the general method described in LRFD Article 3.8.1.3:

- 0.10 kip per linear foot, transverse
- 0.04 kip per linear foot, longitudinal

Both forces shall be applied simultaneously.

3.11.2 Wind Load to Substructure

Wind forces shall be applied to the substructure units in accordance with the loadings specified in AASHTO. Transverse stiffness of the superstructure may be considered, as necessary, to properly distribute loads to the substructure provided that the superstructure is capable of sustaining such loads. Vertical wind pressure, per LRFD 3.8.2, shall be included in the design where appropriate, for example, on single column piers. Wind loads shall be applied through shear keys or other positive means from the superstructure to the substructure. Wind loads shall be distributed to the piers and abutments in accordance with the laws of statics. Transverse wind loads can be applied directly to the piers assuming the superstructure to act as a rigid beam. For large structures a more appropriate result might be obtained by considering the superstructure to act as a flexible beam on elastic supports.

3.11.3 Wind on Noise Walls

Wind load shall be assumed to be uniformly distributed on the area exposed to the wind, taken perpendicular to the assumed wind direction. Design wind pressure may be determined using either the tabulated values given below or the design equations that follow.

Height of structure, Z, at which wind loads are being calculated as measured from low ground, or water level.	Wind Velocity (mph)		
	80 mph	90 mph	100 mph
0 - 30 ft.	4 psf	5 psf	6 psf
30 - 40 ft.	6 psf	7 psf	9 psf
40 - 50 ft.	8 psf	10 psf	12 psf

Minimum Wind Pressure for City Terrain (Exposure A)

Table 3.11-1

Height of structure, Z, at which wind loads are being calculated as measured from low ground, or water level.	Wind Velocity (mph)		
	80 mph	90 mph	100 mph
0 - 30 ft.	9 psf	12 psf	15 psf
30 - 40 ft.	12 psf	15 psf	19 psf
40 - 50 ft.	14 psf	18 psf	22 psf

Minimum Wind Pressure for Suburban Terrain (Exposure B1)
Table 3.11-2

Height of structure, Z, at which wind loads are being calculated as measured from low ground, or water level.	Wind Velocity (mph)		
	80 mph	90 mph	100 mph
0 - 30 ft.	17 psf	21 psf	26 psf
30 - 40 ft.	19 psf	25 psf	30 psf
40 - 50 ft.	22 psf	28 psf	34 psf

Minimum Wind Pressure for Sparse Suburban Terrain (Exposure B2)
Table 3.11-3

Height of structure, Z, at which wind loads are being calculated as measured from low ground, or water level.	Wind Velocity (mph)		
	80 mph	90 mph	100 mph
0 - 30 ft.	26 psf	32 psf	40 psf
30 - 40 ft.	29 psf	36 psf	45 psf
40 - 50 ft.	31 psf	39 psf	49 psf

Minimum Wind Pressure for Open Country Terrain (Exposure C)
Table 3.11-4

Height of structure, Z, at which wind loads are being calculated as measured from low ground, or water level.	Wind Velocity (mph)		
	80 mph	90 mph	100 mph
0 - 30 ft.	39 psf	50 psf	62 psf
30 - 40 ft.	43 psf	54 psf	67 psf
40 - 50 ft.	45 psf	57 psf	71 psf

Minimum Wind Pressure for Coastal Terrain (Exposure D)
Table 3.11-5

Design Wind Pressure

For noise walls with heights greater than 50 ft. or subjected to wind velocities other than 80, 90, or 100 mph, the following equations shall be used to determine the minimum design wind pressure to be applied to the wall:

$$P = P_B\left(\frac{V_{DZ}}{V_B}\right)^2$$

Where

P = design wind pressure (psf)
P_B = base wind pressure (psf)
V_{DZ} = design wind velocity at design elevation (mph)
V_B = base wind velocity (100 mph) at 30.0 ft height

Base Wind Pressure

The base wind pressure, P_B, shall be taken as 40 psf for walls and other large flat surfaces.

Design Wind Velocity

The design wind velocity is computed as:

$$V_{DZ} = 2.5V_0\left(\frac{V_{30}}{V_B}\right)\ln\left(\frac{Z}{Z_0}\right)$$

Where

V_0 = friction velocity (mph)
V_{30} = wind velocity at 30.0 ft above low ground or above design water level (mph)
Z = height of structure at which wind loads are being calculated as measured from low ground or water level, > 30.0 ft
Z_0 = friction length of upstream fetch (ft), (also referred to as roughness length)

Exposure Categories

City (A):	Large city centers with at least 50 percent of the buildings having a height in excess of 70.0 ft. Use of this category shall be limited to those areas for which representative terrain prevails in the upwind direction at least one-half mile. Possible channeling effects of increased velocity pressures due to the bridge or structure's location in the wake of adjacent structures shall be accounted for.
Suburban (B1):	Urban and suburban areas, wooded areas, or other terrain with numerous closely spaced obstructions having the size of single-family or larger dwellings. This category shall be limited to those areas for which representative terrain prevails in the upwind direction at least 1500 ft.
Sparse Suburban (B2):	Urban and suburban areas with more open terrain not meeting the requirements of Exposure B1.
Open Country (C):	Open terrain with scattered obstructions having heights generally less than 30.0 ft. This category includes flat open country and grasslands.
Coastal (D):	Flat unobstructed areas and water surfaces directly exposed to wind. This category includes large bodies of water, smooth mud flats, salt flats, and unbroken ice.

Friction Velocity

A meteorological wind characteristic taken for various upwind surface characteristics (mph).

Condition	City	Suburbs	Sparse Suburbs	Open Country	Coastal
V_0 (mph)	12.0	10.9	9.4	8.2	7.0

Wind Velocity at 30.0 ft

V_{30} may be established from:

Fastest-mile-of-wind charts available in ASCE 7-88 for various recurrence

Site-specific wind surveys, or

In the absence of better criterion, the assumption that $V_{30} = V_B = 100$ mph.

Friction Length

A meteorological wind characteristic of upstream terrain (ft).

Condition	City	Suburbs	Sparse Suburbs	Open Country	Coastal
Z_0 (ft)	8.20	3.28	0.98	0.23	0.025

3.12 Noise Barriers

The design requirement for noise barrier wall on bridges and walls are as follows:

1. The total height of noise barrier wall on bridges, from top of slab to top of noise barrier wall, shall be limited to 8'-0"
2. The total height of noise barrier wall on retaining walls, from top of roadway to top of noise barrier wall, shall be limited to 14'-0"
3. Noise barrier wall thickness shall be 7 inches minimum
4. Two layers of reinforcing bars shall be specified in the cross section, with 1.5" cover, minimum, over both faces as shown in the attached detail.
5. Wind load shall be based on BDM Section 3.11
6. The vehicular collision force shall be based on the LRFD Table A13.2-1 for design forces for traffic railing. The transverse force shall be applied horizontally at 3'-6" height above deck.
7. Seismic load shall be as follows:

   Seismic Dead Load = A x f x D

   Where:

   A = Acceleration coefficient from the Geotechnical Report
   D = Dead load of the wall
   f = Dead load coefficient

Dead Load Coefficient, f	
Dead load coefficient, except on bridges – monolithic connection	1.0
Dead load coefficient, on bridges – monolithic connection	2.5
Dead load coefficient, for connection of precast wall to bridge barrier	8.0
Dead load coefficient, for connection of precast walls to retaining wall or moment slab barriers	5.0

   The product of A and f shall not be taken less than 0.10.

8. LRFD Bridge design specifications shall be used for the structural design of noise barrier walls.

3.13 Earthquake Effects

Earthquake Loads (see BDM Chapter 4)

3.14 Earth Pressure

Earthquake Loads (see BDM Chapter 7)

3.15 Force Effects due to superimposed deformations

PS, CR, SH, TU and TG are superimposed deformations. Load factors for PS, CR, and SH, are as shown in Table 3.5-3. In non-segmental structures: PS, CR and SH are symbolically factored by a value of 1.0 in the strength limit state, but are actually designed for in the service limit state. For substructure in the strength limit state, the value of 0.50 for γ_{PS}, γ_{CR}, γ_{SH}, and γ_{TU} may be used when calculating force effects in non-segmental structures, but shall be taken in conjunction with the gross moment of inertia in the columns or piers. The larger of the values provided for load factor of TU shall be used for deformations and the smaller values for all other effects. The calculation of displacements for TU loads utilizes a factor greater than 1.0 to avoid under sizing joints, expansion devices, and bearings.

The current *LRFD Specifications* require a load factor of 1.2 on *CR*, *SH*, and *TU* deformations, and 0.5 on other *CR/SH/TU* force effects. The lower value had been rationalized as dissipation of these force effects over time, particularly in the columns and piers.

Changing the load factors for creep and shrinkage is not straight-forward because *CR*, *SH* are "superimposed deformations", that is, force effects due to a change in material behavior that cause a change in the statical system. For safety and simplicity in design, they are treated as loads--despite not being measurable at time $t = 0$. However, behavior is nonlinear and application of the load factor must also be considered. Some software will run service load analysis twice: once with and once without *CR*, *SH* effects. The *CR* and *SH* can then be isolated by subtracting the results of the two runs. Other software will couple the *CR* and *SH* with the dead load, giving a shrinkage- or creep-adjusted dead load.

The proposed compromise is to assign creep and shrinkage the same load factor as the *DC* loads, but permit a factor of 1.0 if the project-specific creep coefficient can be determined and is then used in the linear analysis software.

Thermal and shrinkage loadings are induced by movements of the structure and can result from several sources. Movements due to temperature changes are calculated using coefficients of thermal expansion of 0.000006 ft/ft per degree for concrete and 0.0000065 ft/ft per degree for steel. Reinforced concrete shrinks at the rate of 0.0002 ft/ft.

3.16 Other Loads

3.16.1 Buoyancy

The effects of submergence of a portion of the substructure is to be calculated, both for designing piling for uplift and for realizing economy in footing design.

3.16.2 Collision Force on Bridge Substructure

See LRFD Articles 3.6.5 and 3.14

3.16.3 Collision Force on Traffic Barrier

See LRFD Article 3.6.5.1

3.16.4 Force from Stream Current, Floating Ice, and Drift

See AAHTO LRFD Article 3.9

3.16.5 Ice Load

In accordance with WSDOT HQ Hydraulics Office criteria, an ice thickness of 12 inches shall be used for stream flow forces on piers throughout Washington State.

3.99 Bibliography

1. AASHTO, *LRFD Bridge Design Specifications for Design of Highway Bridges*, 2004 and interims through 2007.

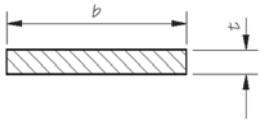

$$R = \frac{bt^3}{3}$$

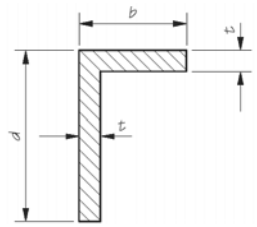

$$R = \frac{(b+d)t^3}{3}$$

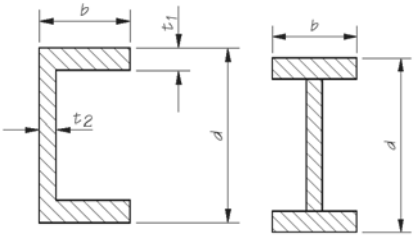

$$R = \frac{2bt_1^3 + dt_2^3}{3}$$

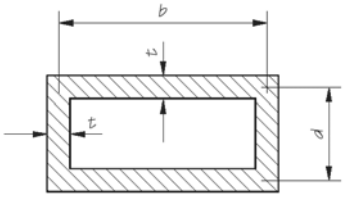

$$R = \frac{2tb^2d^2}{b+d}$$

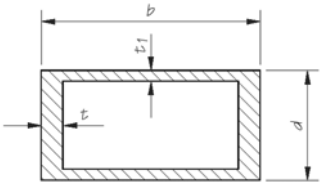

$$R = \frac{2tt_1(b-t)^2(d-t_1)^2}{bt + dt_1 - t^2 - t_1^2}$$

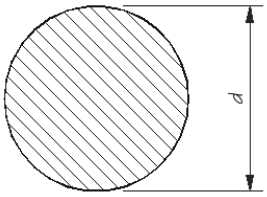

$$R = 0.0982d^4$$

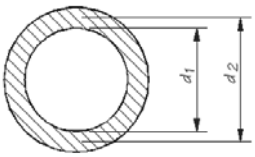

$$R = 0.0982\left(d_2^4 - d_1^4\right)$$

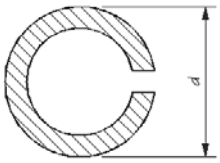

$$R = 1.0472t^3 d$$

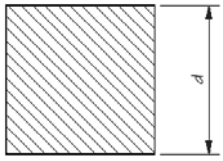

$$R = 0.1406d^4$$

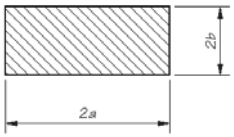

$$R = ab^3\left[\frac{16}{3} - 3.36\frac{b}{a}\left(1 - \frac{b^4}{12a^4}\right)\right]$$

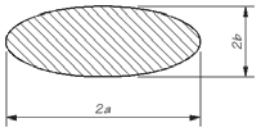

$$R = \frac{\pi a^3 b^3}{a^2 + b^2}$$

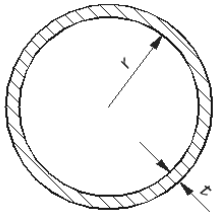

$$R = 2\pi r^3 t$$

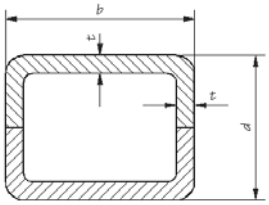

$$R = \frac{2tb^2d^2}{b+d}$$

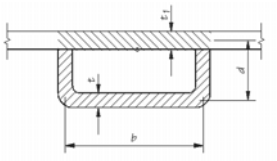

$$R = \frac{4b^2d^2}{\frac{b+2d}{t} + \frac{b}{t_1}}$$

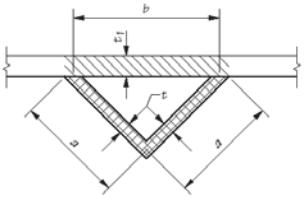

$$R = \frac{a^4}{\frac{2a}{t} + \frac{b}{t_1}}$$

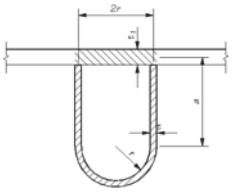

$$R = \frac{4r^2\left(\frac{\pi r}{2} + 2a\right)^2}{\frac{2a + \pi r}{t} + \frac{2r}{t_1}}$$

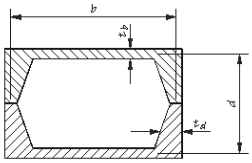

$$R = \frac{2b^2d^2}{\frac{b}{t_b} + \frac{d}{t_d}}$$

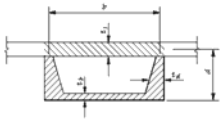

$$R = \frac{4b^2d^2}{\frac{b}{t_b} + \frac{2d}{t_d} + \frac{b}{t_1}}$$

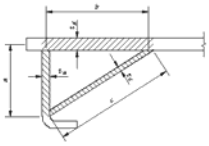

$$R = \frac{a^2b^2}{\frac{a}{t_a} + \frac{b}{t_b} + \frac{c}{t_c}}$$

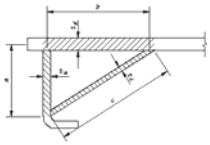

$$R = \frac{a^2b^2}{\frac{a}{t_a} + \frac{b}{t_b} + \frac{c}{t_c}}$$

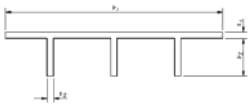

$$R = \frac{b_1t_1^3 + 3b_2t_2^3}{3}$$

Multi-Celled Sections

Torsion of two or more cells connect at the walls is a statically indeterminate problem. The general method to find the torsional rigidity, R, is as follows:

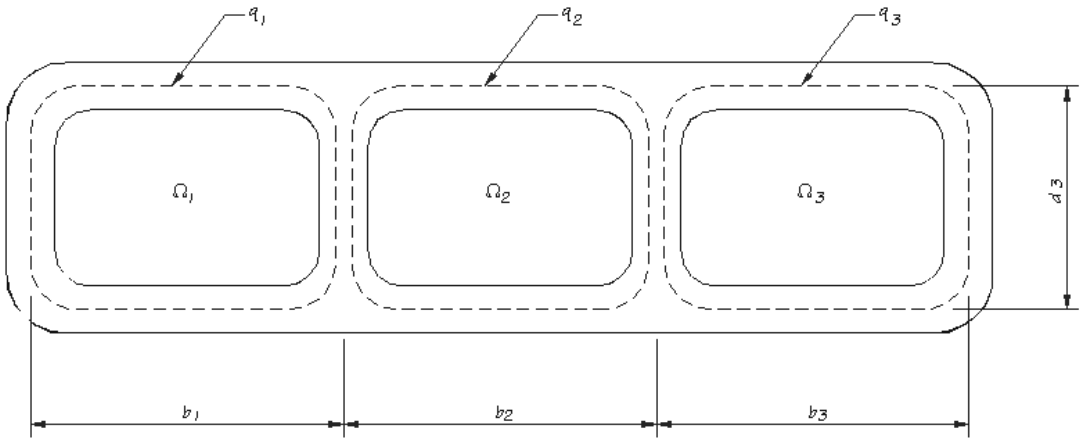

The equation for equilibrium for n cells is:

$$M_t = 2\sum_{i=1}^{n} q_i \Omega_i \tag{1}$$

Where q_i is the shear flow in cell i and Ω_i is the area enclosed by the center line of the walls inclosing the cell, and M_t is the twisting moment applied to the cell.

The equations of consistent deformation are:

$$S_{ji} q_i + S_{jj} q_j + S_{jk} q_k = 2\Omega_j \theta \tag{2}$$

Where:

$$S_{ji} = -\frac{1}{G}\int S_{ji}\,\frac{ds}{t}$$

$$S_{jj} = -\frac{1}{G}\int S_{jj}\,\frac{ds}{t}$$

$$S_{jk} = -\frac{1}{G}\int S_{jk}\,\frac{ds}{t}$$

G is the shear modulus of elasticity

$\int S_{ji}\,\frac{ds}{t}$ is the sum of the length of cell wall, common to cells j and i, divided by its thickness

$\int S_{jk}\,\frac{ds}{t}$ is the sum of the length of cell wall, common to cells j and k, divided by its thickness

$\int S_{jj}\,\frac{ds}{t}$ is the sum of the length of cell wall, common to cell j, divided

by their respective thicknesses.

θ is the angle of twist in radians

Equation (2) will yield n equations for n unknown shear flows and can be solved for the shear flows q_i in terms for G and the angle of twist θ. Knowing θ_i and Ω_i the torsional constant R may be calculated from:

$$R = \frac{2}{G\theta}\sum_{i=1}^{n} q_i \Omega_i$$

A simplification of this method is to assume that the interior web members are not effective in torsion. The torsional constant may be approximated by:

$$R = \frac{4A^2}{\sum_i \frac{S_i}{t_i}}$$

Where:

- A is the area enclosed by the centerline of the exterior webs and the top and bottom slabs
- S_i is the length of side i
- t_i is the thickness of side i

Appendix 3.1-B1 HL-93 Loading for Bridge Piers

1. Introduction

   The purpose of this example is to demonstrate a methodology of analyzing a bridge pier for the HL-93 live load on two-dimension plane frame in both longitudinal and transverse directions. First, the longitudinal analysis of the superstructure is analyzed. This analysis produces the live load reactions at the intermediate piers. Then the reactions are applied in the transverse direction, for the crossbeam and column design.

2. Bridge Description

3. Analysis Goals

   To determine:

   - Maximum axial forces and corresponding moments.
   - Maximum moments and corresponding axial forces.
   - Maximum shears.

4. Material Properties

   4.1 Girders

   $w_c = 0.160$ *kcf*
   f'c = 7*ksi*
   $E_c = 33{,}000(0.160)^{1.5}\sqrt{7} = 5588$ ksi

   4.2 Slab, Columns, and Cross Beam

   wc = 0.160 *kcf*
   $f'_c = 4$ *ksi*
   $E_c = 33{,}000(0.160)^{1.5}\sqrt{4} = 4224$ ksi

5. Section Properties

   Compute the geometric properties of the girder, columns, and cap beam.

   5.1. Girder

   The composite girder section properties can be obtained from the Section Properties Calculator in QConBridge program for the longitudinal direction.

   $A = 1254.6$ in^2
   $I = 1{,}007{,}880$ in^3

   5.2. Column

   Section properties of an individual column are obtained by simple formula for longitudinal and transverse directions:

   For the longitudinal analysis we need to proportion the column stiffness to each girder line. For longitudinal analysis the section properties of the each column member are:

   NOTE

   For other column shapes and columns on a skewed bent, the properties of the columns need to be computed in the plane of the longitudinal and transverse frames respectively for analysis in each direction.

5.3. Cap Beam

Cap beam properties are obtained by simple formula in transverse direction:

6. Longitudinal Analysis

The purpose of this analysis is to determine the maximum live load reactions that will be applied to the bent. The results from this analysis will be scaled by the number of loaded lanes causing maximum responses in the bent and distributed to individual columns, for the transverse analysis.

The longitudinal analysis consists of applying various combinations of design lane and design trucks. The details can be found in AAHSTO LRFD 3.6.

6.1 Loading

In order to produce the maximum moment and reaction at interior piers, two trucks spaced at 50 feet minimum are used in the longitudinal direction per LRFD Section 3.6.1.3. The influence lines of the axial force, moment, and shear at the top and bottom column of the live loading show the effect of a two-truck loading.

6.1.1 Influence Lines

Figures below are influence lines for axial force, shear, and moment at the top of Pier 2 for a unit load moving along a girder line. The influence lines for the bottom of the pier will be exactly the same, except the moment influence will be different by an amount equal to the shear times the pier height.

To achieve the maximum compressive reaction, the lane load needs to be in spans 1 and 2, and the two trucks need to straddle between pier 2 and be as close to each other as possible. That is, the minimum headway spacing of 50 feet will maximize the axial reaction.

Maximum shears and moments occur under two conditions. First, spans 1 and 3 are loaded with the lane load and the two truck loading. The headway spacing that causes the maximum response is in the range of 180 – 200 feet. Then, a span 2 is loaded with the lane load and the two truck train. The headway spacing is at its minimum value of 50 ft.

Analytically finding the exact location and headway spacing of the trucks for the extreme force effects is possible, but hardly worth the effort. Structural analysis tools with a moving load generator, such as GTSTRUDL, can be used to quickly determine the maximum force effects.

6.2 Results

A longitudinal analysis is performed using GTSTRUDL. The details of this analysis are shown.

The result of the longitudinal analysis consists of two-truck train and lane load results. These results need to be combined to produce the complete live load response. The complete response is computed as $Q_{LL+IM} = 0.9[(IM)(\textit{Dual Truck Train}) + \textit{Lane Load}]$.

The dynamic load allowance (impact factor) is given by the LRFD specifications as 33%. Note that the dynamic load allowance need not be applied to foundation components entirely below ground level. This causes us to combine the two truck train and lane responses for cross beams and columns differently than for footings, piles, and shafts.

6.2.1 Combined Live Load Response

The tables below summarize the combined live load response. The controlling load cases are given in parentheses.

Maximum Axial

		Top of Pier	Bottom of Pier
	Axial (kips/lane)	Corresponding Moment (k-ft/lane)	Corresponding Moment (k-ft/lane)
Two-Truck Train	-117.9 (Loading case 1014)	-146.2	103.4
Lane Load	-89.1 (Loading case LS12)	-195.5	141.9
LL+IM (Column)	-221.3	-350.9	251.5
LL (Footing)	-186.3	N/A	220.8

Maximum Moment – Top of Pier

	Moment (k-ft/lane)	Corresponding Axial (kips/lane)
Two-Truck Train	-582.5 (Loading 1018)	-85.8
Lane Load	-364.2 (Loading LS2)	-49.4
LL+IM (Column)	-1025.0	-147.2

Maximum Moment – Bottom of Pier

	Moment (k-ft/lane)	Corresponding Axial (kips/lane)
Two-Truck Train	287.7 (Loading 1018)	-85.8
Lane Load	179.7 (Loading LS2)	-49.4
LL+IM (Column)	506.1	-147.2
LL+IM (Footing)	420.7	-121.7

Maximum Shear

	Shear (kips/lane)
Two-Truck Train	21.8 (Loading 1018)
Lane Load	13.6 (Loading LS2)
LL+IM (Column)	38.3
LL (Footing)	31.9

7. Transverse Analysis

Now that we have the maximum lane reactions from the longitudinal girder line analysis, we need to apply these as loads to the bent frame.

7.1 Loading

Apply the superstructure live load reactions of the longitudinal direction to substructure by placing the wheel line reactions directly to the crossbeam and varying the number and position of design lanes described in chapter 7 of the BDM.

7.2 Results

A transverse analysis is performed using GTSTRUDL. The details of this analysis are shown.

7.2.1 Cap Beam

For this example, we will look at results for three design points, the left and right face of the left-hand column, and at the mid-span of the cap beam. Note that in the analysis, the wheel line reactions were applied from the left hand side of the bent. This does not result in a symmetrical set of loadings. However, because this is a symmetrical frame we expect symmetrical results. The controlling results from the left and right hand points “A” and “B” are used.

For shear design of the crossbeam, LRFD specifications section C5.8.3.4.2 allows determination of the effects for moments and shears on the capacity of a section using the maximum factored moments and shears at the section. Hence, the results below do not show the maximum shears and corresponding moments.

The tables below summarize the results of the transverse analysis for the crossbeam. The basic results are adjusted with the multiple presence factors per LRFD Table 3.6.1.1.2-1. The controlling load cases are in parentheses.

Point A

	Shear (kips)	+Moment (k-ft)	-Moment (k-ft)
Force Effect	110.7 (Loading 1009)	0	-484.3 (1029)
Multiple Presence Factor	1.2	1.2	1.2
LL+IM	132.8	0	-581.2

Point B

	Shear (kips)	+Moment (k-ft)	-Moment (k-ft)
Force Effect	155.8 (Loading 2330)	314.3 (Loading 1522)	-650.9 (Loading 1029)
Multiple Presence Factor	1.0	1.2	1.2
LL+IM	155.8	377.2	-781.1

Point C

	Shear (kips)	+Moment (k-ft)	-Moment (k-ft)
Force Effect	87.9 (Loading 2036)	426.4 (Loading 1520)	-400.5 (Loading 1029)
Multiple Presence Factor	1.0	1.2	1.2
LL+IM	87.9	511.7	-480.6

7.2.2 Columns

The tables below show the live load results at the top and bottom of a column. The results are factored with the appropriate multiple presence factors. The controlling load cases are in parentheses.

Maximum Axial – Top and Bottom of Column

		Top of Column	Bottom of Column
	Axial (kips)	Corresponding Moment (k-ft)	Corresponding Moment (k-ft)
Force Effect	-347.6 (Loading 2026)	34.1	28.4
Multiple Presence Factor	1.0	1.0	1.0
LL+IM	-347.6	34.1	28.4

Maximum Moment – Top of Column

	Moment (k-ft)	Corresponding Axial (kips)
Force Effect	59.3 (Loading 1009)	-265.6
Multiple Presence Factor	1.2	1.2
LL+IM	71.2	-318.7

Maximum Moment – Bottom of Column

	Moment (k-ft)	Corresponding Axial (kips)
Force Effect	-53.6 (Loading 1029)	55.6
Multiple Presence Factor	1.2	1.2
LL+IM	-64.3	66.7

Maximum Shear

	Shear (kips)
Force Effect	-1.0 (Loading 1029)
Multiple Presence Factor	1.2
LL+IM	-1.2

7.2.3 Footings

In obtaining the footing forces of the loads from the analysis above, the linear elastic system, the principle of superposition can be used. The footing results are simply the column results scaled by the ratio of the footing load to the column load. For this case, the scale factor is 186.3÷221.3 = 0.84.

Maximum Axial – Top of Footing

	Axial (kips)	Corresponding Moment (k-ft)
LL	-292	23.9

Maximum Moment – Top of Footing

	Moment (k-ft)	Corresponding Axial (kips)
LL	-45.0	46.7

Maximum Shear – Top of Footing

	Shear (kps)
LL	-1.0

8. Combining Longitudinal and Transverse Results

To get the full set of column forces, the results from the longitudinal and transverse analyses need to be combined. Recall that the longitudinal analysis produced moments, shears, and axial load for a single loaded lane whereas the transverse analysis produced column and footing forces for multiple loaded lanes.

Before we can combine the force effects we need to determine the per column force effect from the longitudinal analysis. To do this, we look at the axial force results in transverse model to determine the lane fraction that is applied to each column.

For maximum axial load, 2 lanes at 221.3 kips/lane produce an axial force of 347.6 kips. The lane fraction carried by the column is 347.6/(2*221.3) = 0.785 (78.5%).

Mz = (-350.9 K-FT/LANE)(2 LANES)(0.785)(1.0) = -550.9 K-FT (Top of Column)

Mz = (251.5 K-FT/LANE)(2 LANES)(0.785)(1.0) = 394.9 K-FT (Bottom of Column)

Mz = (220.8 K-FT/LANE)(2 LANES)(0.785)(1.0) = 346.7 K-FT (Footing)

For maximum moment (and shear because the same loading governs) at the top of the column, 1 lane at 221.3 kips/lane produces an axial force of 318.7 kips (318.7/221.3 = 1.44), 144% of the lane reaction is carried by the column.

Mz = (-1025.0)(1.44)(1.2) = -1771.2 k-ft

Vx = (38.3)(1.44)(1.2) = 66.2 K (Column)

Vx = (31.9)(1.44)(1.2) = 55.1 K (Footing)

For maximum moment at the bottom of the column, 1 lane at 221.3 kips/lane produces an axial force of 66.7 kips (66.7/221.3 = 0.30) 30% of the lane reaction is carried by the column.

Mz = (506.1)(0.30)(1.2) = 182.2 k-ft (Column)

Mz = (420.7)(0.30)(1.2) = 151.4 k-ft (Footing)

Column

	Load Cases				
	Maximum Axial Top	Maximum Moment Bottom	Maximum Moment Top	Maximum Moment Bottom	Shear
Axial (kips)	-347.6	-347.6	- 318.7	66.7	
Mx (k-ft)	34.1	28.4	71.2	-64.3	
Mz (k-ft)	-550.9	394.9	-1771.2	182.1	
Vx (kips)					66.2
Vz (kips)					-1.2

Footing

	Load Cases		
	Maximum Axial	Maximum Moment Bottom	Shear
Axial (kips)	-292	46.7	
Mx (k-ft)	23.9	-45.0	
Mz (k-ft)	346.7	151.4	
Vx (k)			72.7
Vz (k)			-1.0

9. Skew Effects

   This analysis becomes only slightly more complicated when the pier is skewed with respect to the centerline of the bridge. The results of the longitudinal analysis need to be adjusted for skew before being applied to the transverse model.

   The shears and moments produced by the longitudinal analysis are in the plane of the longitudinal model. These force vectors have components that are projected into the plane of the transverse model as show in the figure below. The transverse model loading must include these forces and moments for each wheel line load. Likewise, the skew adjusted results from the longitudinal analysis need to be used when combining results from the transverse analysis.

10. Summary

    This example demonstrates a method for analyzing bridge piers subjected to the LRFD HL-93 live load.

11. Longitudinal Analysis Details

    The following output shows the longitudinal analysis details. In the live load generation portion of the GTSTRUDL input, you will see multiple trials for live load analysis. Each trial uses a different range of headways spacing for the dual truck train. The first trial varies the headway spacing from 180 to 205 feet. Based on this, a tighter range between 193 and 198 feet was used to get the headway spacing corresponding to the maximum loads correct to within 1 foot.

12. Transverse Analysis Details

The following output shows the details of the transverse analysis. The interesting thing to note about the transverse analysis is the live load truck configuration. A technique of treating the wheel line reactions as a longitudinal live load is used. A two axle “truck” is created. The truck is positioned so that it is on the left edge, center, and right edge of the design lane. In order to keep the axles in the correct position, a dummy axle with a weight of 0.0001 kips was used. This dummy axial is the lead axle of the truck and it is positioned in such a way as to cause the two “real” axles to fall in the correct locations within the design lanes.

The GTSTRUDL live load generator uses partial trucks when it is bring a truck onto or taking it off a bridge. As such, less then the full number of axles are applied to the model. For the transverse analysis, we do not want to consider the situation when only one of the two wheel lines is on the model. As such, several load cases are ignored by way of the LOAD LIST command on line76 of the output.

Chapter 4 Seismic Design and Retrofit Contents

4.1	**General**		4.1-1
4.2	**WSDOT Modifications to AASHTO Guide specifications for LRFD Seismic Bridge Design**		4.2-1
4.3	**Seismic Analysis and Retrofit Design of Existing Bridges**		4.3-1
	4.3.1	General	4.3-1
	4.3.2	Seismic Analysis Requirements	4.3-1
	4.3.3	Seismic Retrofit Design	4.3-1
	4.3.4	Computer Analysis Verification	4.3-6
	4.3.5	Earthquake Restrainers	4.3-6
4.99	**Bibliography**		4.99-1
Appendix A			
Appendix 4.1-A1		Earthquake Probability - Poisson Model	4.1-A1-1
Appendix B			
Appendix 4.6-B1		Design Examples of Seismic Retrofits	4.6-B1-1

Chapter 4 Seismic Design and Retrofit

4.1 General

The purpose of this chapter is to provide designers with WSDOT seismic design practice and criteria.

Beginning January 2008, WSDOT requires all new bridges, bridge widenings, and retaining walls that have not started design (progressed beyond the Preliminary Plan stage) to be designed in accordance with the requirements of the AASHTO Guide Specifications for LRFD Seismic Bridge Design and as modified by BDM Section 4.2 below. More requirements and design memos may follow with the experience gained from the upcoming designs.

All highway bridges in Washington State are classified as “Normal” except for special major bridges. Special major bridges fitting the classifications of either “Critical” or “Essential” will be so designated by either the Bridge and Structures Engineer or the Bridge Design Engineer.

4.2 WSDOT Modifications to AASHTO Guide specifications for LRFD Seismic Bridge Design

The following items summarize WSDOT's additional requirements and deviations from the AASHTO Guide Specifications for LRFD Seismic Bridge Design:

Article	Subject	WSDOT Requirements
3.1	Applicability of the specifications	AASHTO Guide Specifications is applicable to the design of conventional bridges with span length not exceeding 300 ft. Seismic design requirements of non-conventional bridges, and bridges categorized as essential or critical shall be with the consultation of WSDOT Geotechnical Engineer and Bridge Design Engineer.
3.3	Earthquake Resisting Systems (ERS) Requirements for SDC C & D	WSDOT Global Seismic Design Strategies: Type 1: Ductile substructure with essentially elastic superstructure. This category is permissible. Type 2: Essentially elastic substructure with a ductile superstructure. This category is not permissible. Type 3: Elastic superstructure and substructure with a fusing mechanism between the two. This category is permissible with Bridge Design Engineer's approval.
3.3	Earthquake Resisting Systems (ERS) Requirements for SDC C & D	**Permissible Earthquake Resisting System (ERS), see Figure 3.3-1a:** Types 1 and 3 are permissible. Types 2, 4 & 5 are permissible with Bridge Design Engineer's approval. Type 6 is not Permissible. **Permissible Earthquake Resisting Elements (ERE), see Figure 3.3-1b:** Types 1, 2, 7, 8, 9, 10 &14 are permissible ERE. Types 3, 5, 6, 11, 12 & 13 are permissible ERE with Bridge Design Engineer's approval. Type 4 is not permissible. **Permissible Earthquake Resisting Elements that require Owner's Approval, see Figure 3.3-2:** Types 1 & 2 are permissible ERE with Bridge Design Engineer's approval. Types 3, 4, 5, 6, 7, 8 & 9 are not Permissible. **Earthquake Resisting Elements that are not Recommended for New Bridges, see Figure 3.3-3:** Types 1, 2, 3, & 4 are not Permissible. Permissible ERS and ERE systems with Bridge Design Engineer's approval are applicable to all projects regardless of contracting methods.
3.4	Seismic Ground Shaking Hazard	The procedure used to determine the ground shaking hazard for site class F, critical or essential bridges shall be based on the WSDOT Geotechnical Engineer recommendations.

3.5	Selection of Seismic Design Category (SDC)	All structural designs in Western Washington shall be designed in accordance with SDC C or D. This applies to all structures West of the Cascade Crest (West of MP 157 on SR 20; West of MP 65 on US2; West of MP 52 on I-90; West of MP 69 on SR 410; West of MP 151 on US 12; and West of MP 63 on SR 14). Pushover Analysis shall be used to determine displacement capacity for both SDC C & D. If liquefaction-induced lateral spreading or slope failure that could impact the stability of the bridge could occur, the bridge should be designed in accordance with SDC D, regardless of the magnitude of S_{D1}.
3.6	Temporary and Staged Construction	Design response spectra for temporary bridges and bridges built in staged construction may be reduced by a factor of not more than 2.5. However, it shall be clear in the contract document that structure is designed for reduced response spectra. The provisions of this article apply to temporary bridges and bridges built in staged construction that is considered for not more than 3 years in service.
4.1.2	Balanced Stiffness Requirements	Balanced stiffness requirements and balanced frame geometry requirement shall be satisfied for bridges in both SDC C & D.
4.1.3	Balanced Frame Geometry Requirements	Deviation from balanced stiffness and balanced frame geometry requirements shall be approved by Bridge Design Engineer.
4.2	Selection of Analysis Procedure to Determine Seismic Demand	Analysis Procedures: Procedure 1 (Equivalent Static Analysis) shall not be used. Procedure 2 (Elastic Dynamic Analysis) shall be used for all regular bridges with 2 through 6 spans. Procedure 3 (Nonlinear Time History) may be used where applicable. The time histories of input acceleration used to describe the earthquake loads shall be selected in consultation with WSDOT Geotechnical Engineer and Bridge Design Engineer.
4.9	Member ductility Requirement for SDC C and D	In-ground hinging shall not be considered for drilled shaft foundations. In-ground hinging for pile foundation shall be upon Bridge Design Engineer approval.
4.12.3	Minimum Support Length Requirements Seismic Design Category D	For simple span superstructures, the support lengths shall be 150% of the empirical support length, N, specified by Equation 4.12.2-1
4.13.1	Abutments	Longitudinal restrainers shall be designed in accordance with the requirements of WSDOT BDM Section 4.3.5
5.2	Abutments	Participation of abutment walls in the overall dynamic response of bridge systems during earthquake loading and in providing resistance to seismically induced inertial loads may be considered in the seismic design of bridges when approval is given by the WSDOT Bridge Design Engineer as required in Section 3.3
5.3	Foundation - general	Requirement of foundation modeling method (FMM) shall be based on the WSDOT Geotechnical Engineer's recommendations.

5.6.2	Figure 5.6.2-1	The horizontal axis label of Figure 5.6.2-1 for both (a) Circular Sections and (b) Rectangular sections shall be Axial Load Ratio $\frac{P}{f'_{ce} A_g}$
5.6.3	I_{eff} for Box Girder Superstructure	Gross moment of inertia shall be used for box girder superstructure modeling.
6.3.4	Resistance to Overturning	Revise the resistance factor for overturning of footing to $\phi = 1.0$
6.3.5	Resistance to Sliding	Revise the resistance factor for sliding of footing to $\phi = 1.0$
6.3.6	Flexure	Revise Eq. (6.3.6-1) as follows: $\phi M_n \geq M_u$
6.3.7	Shear	Revise Eq. (6.3.7-1) as follows: $\phi V_n \geq V_u$
6.4.2	Moment Capacity of Pile Foundations	In Eq. 6.4.2-2 change: $M_{p(x)}^{col}$ to $M_{(x)}^{col}$ And $M_{p(x)}^{col}$ to $M_{(x)}^{col}$
6.4.5	Footing Joint Shear SDC C and D	Revise Eq. (6.4.5-11) as follows: $(B_c + D_{ftg})(D_{cj} + D_{ftg})$
6.7.1	Longitudinal Direction requirement	Case 2: Earthquake Resisting System (ERS) with abutment contribution may be used provided that the mobilized longitudinal passive pressure is less than the 0.50 of the value obtained using procedure given in Article 5.2.
6.8	Liquefaction Design Requirements	Liquefaction design requirements shall be considered for bridges in both SDC C & D. Soil liquefaction assessment shall be based on the Geotechnical Engineer's recommendation for each bridge site. • For all bridge foundations with liquefaction identified, structures shall be designed and analyzed for both a non-liquefied and liquefied soil column per the recommendations discussed in Section 6.8 of the Guide Specification for LRFD Seismic Bridge Design. For the liquefied soil analysis case a reduced site-specific response spectrum may be considered along with in-ground foundation element inelastic behavior subject to approval of the WSDOT Bridge Design Engineer. In addition to the above requirements and for site conditions where lateral spreading and downdrag are identified, the design process shall consider these two loading conditions as independent of the seismic inertial lateral loads. Lateral spread forces and gravity loads shall be resisted by foundation elements supported in liquefied soil which shall include reduced axial skin friction resistance. Downdrag and gravity loads shall be resisted by foundation elements considering reduced axial skin friction resistance.
8.4.1	Reinforcing Steel	Only ASTM A 706 reinforcing steel shall be used. Deformed welded wire fabric may be used with Bridge Design Engineer's approval. Wire rope or strands for spirals, and high strength bars with yield strength in excess of 60 ksi shall not be used for design purposes.

8.5	Plastic Moment Capacity for Ductile Concrete Members for SDC B, C & D	The overstrength magnifier of 1.2 for ASTM A 706 reinforcement shall be applied to column plastic hinging moment to determine force demand for capacity protected members connected to a hinging member.
8.6.7	Interlocking Bar Size	Same bar sizes may be used inside and outside of interlocking spirals.
8.8.2	Minimum longitudinal reinforcement	Minimum longitudinal reinforcement of 1% of A_g shall be used for columns in SDC B, C, & D. The minimum Longitudinal reinforcement on top of the shaft shall be the larger of 0.75%A_g of the shaft or 1.0% A_g of the attached column. The minimum longitudinal reinforcement beyond the top of the shaft shall be 0.75%A_g. The clear spacing between longitudinal reinforcement shall not be less than 6" minimum or more than 9" maximum. Longitudinal reinforcement shall be provided for the full length of shaft.
8.8.10	Development length for Column Bars Extended into Oversized Pile Shafts for SDC C & D	Extending column bars into oversized shaft shall be based on either a staggered manner as described in Article 8.8.2, or per current BDM practice based on TRAC Report WA-RD 417.1 “Non Contact Lap Splice in Bridge Column-Shaft Connections” Same size column-shaft is not permissible unless approved by the Bridge Design Engineer.
8.10	Superstructure Capacity design for Integral Bent Caps for Longitudinal direction for SDC B, C & D	The effective width for open soffit girder-deck superstructure as specified in Article 8.10 shall be used instead of current WSDOT practice based on the tributary number of girders per column. The effective width for girder-deck bridges shall be: $B_{eff} = D_c + D_s$, where D_c is the diameter of column and D_s is the depth of superstructure measured from top of column to top of deck including the lower crossbeam. Only girders within the effective width shall be considered for extended strand calculations. In continuous bridges, prestressed girders from adjacent spans shall be the same type and size. Moment induced due to the eccentricity between the plastic hinge location and the center of gravity of the bent cap shall be distributed based on the effective stiffness characteristics of the frame.
8.11	Superstructure Capacity Design for Integral Bent Caps for Transverse Direction for SDC B, C & D	The effective width for overstrength moment calculations M_{po}, shall be taken as $B_{eff} = B_{cop} + 12t$ where t is the thickness of top or bottom slab. Moment induced due to the eccentricity between the plastic hinge location and the center of gravity of the bent cap shall be distributed based on the effective stiffness characteristics of the frame.
8.12	Superstructure Design for Non-Integral Bent Caps for SDC B, C & D	Non-Integral Bent Caps shall not be used for continuous bridges in SDC B, C & D. Bent caps are considered integral if they terminate at the outside of exterior girder and respond monolithically with the girder system under dynamic excitations. Non-integral bent caps such as outriggers, C-bents, etc may be used upon Bridge Design Engineer’s approval.
8.16.2	Cast-in-Place Concrete Piles	Minimum longitudinal reinforcement of 0.75% of A_g shall be provided for CIP piles in SDC B, C, & D. Longitudinal reinforcement shall be provided for the full length of pile.

4.3 Seismic Analysis and Retrofit Design of Existing Bridges

4.3.1 General

As of January 1, 2008, all seismic analysis and retrofit design for existing bridges shall be performed in accordance with the FHWA publication FHWA-HRT-06-032 "Seismic Retrofitting Manual for Highway Structures: Part 1 – Bridges".

4.3.2 Seismic Analysis Requirements

The first step in retrofitting a bridge is to analyze the existing structure to identify seismically deficient elements. The initial analysis consists of generating capacity/demand ratios for all relevant bridge components using Method C – Component Capacity / Demand Method of section 5.4 of the Seismic Retrofitting Manual. In performing this analysis, the seismic demands shall be determined using the Multi-Mode Spectral Analysis of section 5.4.2.2 (at a minimum). The Uniform Load Method of section 5.4.2.1 is not allowed except for use in verifying the results of the Multi-Mode Spectral Analysis. If the results of the Method C analysis indicate that a high level of retrofit is needed, a subsequent analysis, the Method D2 – Structure Capacity/Demand (Pushover) Method of section 5.6 of the Seismic Retrofitting Manual, shall be performed. The displacement demand applied during the pushover analysis shall be the maximum displacement determined from the Method C elastic response analysis. For most WSDOT bridges, the seismic analysis need only be performed for the upper level (1000-year return period) ground motions with a Life Safety seismic performance level.

4.3.3 Seismic Retrofit Design

Once seismically deficient bridge elements have been identified, appropriate retrofit measures shall be selected and designed. Table 1-11, Chapters 8, 9, 10, 11, and Appendices D thru F of the Seismic Retrofitting Manual shall be used in selecting and designing the seismic retrofit measures. The WSDOT Bridge and Structure Office Seismic Specialist shall be consulted in the selection and design of the retrofit measures.

1

Longitudinal Response

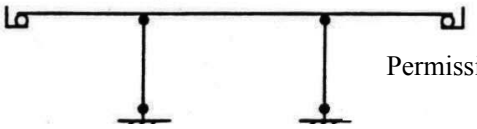

Permissible

- Plastic hinges in inspectable locations.
- Abutment resistance not required as part of ERS
- Knock-off backwalls permissible

2

Longitudinal Response

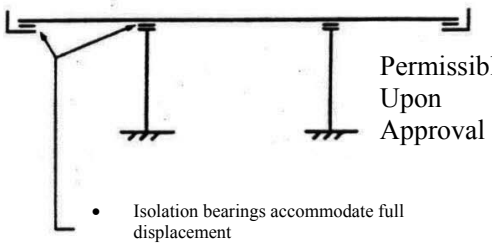

Permissible Upon Approval

- Isolation bearings accommodate full displacement
- Abutment not required as part of ERS

3

Transverse Response

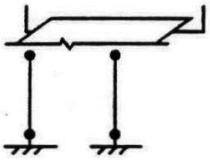

Permissible

- Plastic hinges in inspectable locations.
- Abutment not required in ERS, breakaway shear keys permissible

4

Transverse or Longitudinal Response

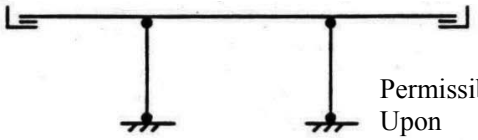

Permissible Upon Approval

- Plastic hinges in inspectable locations
- Isolation bearings with or without energy dissipaters to limit overall displacements

5

Transverse or Longitudinal Response

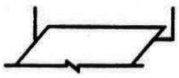

Permissible Upon Approval

- Abutment required to resist the design earthquake elastically
- Longitudinal passive soil pressure shall be less than 0.70 of the value obtained using the procedure given in Article 5.2.3

6

Longitudinal Response

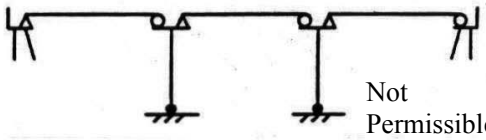

Not Permissible

- Multiple simply-supported spans with adequate support lengths
- Plastic hinges in inspectable locations or elastic design of columns

Permissible Earthquake Resisting Systems (ERS).

Figure 3.3-1a

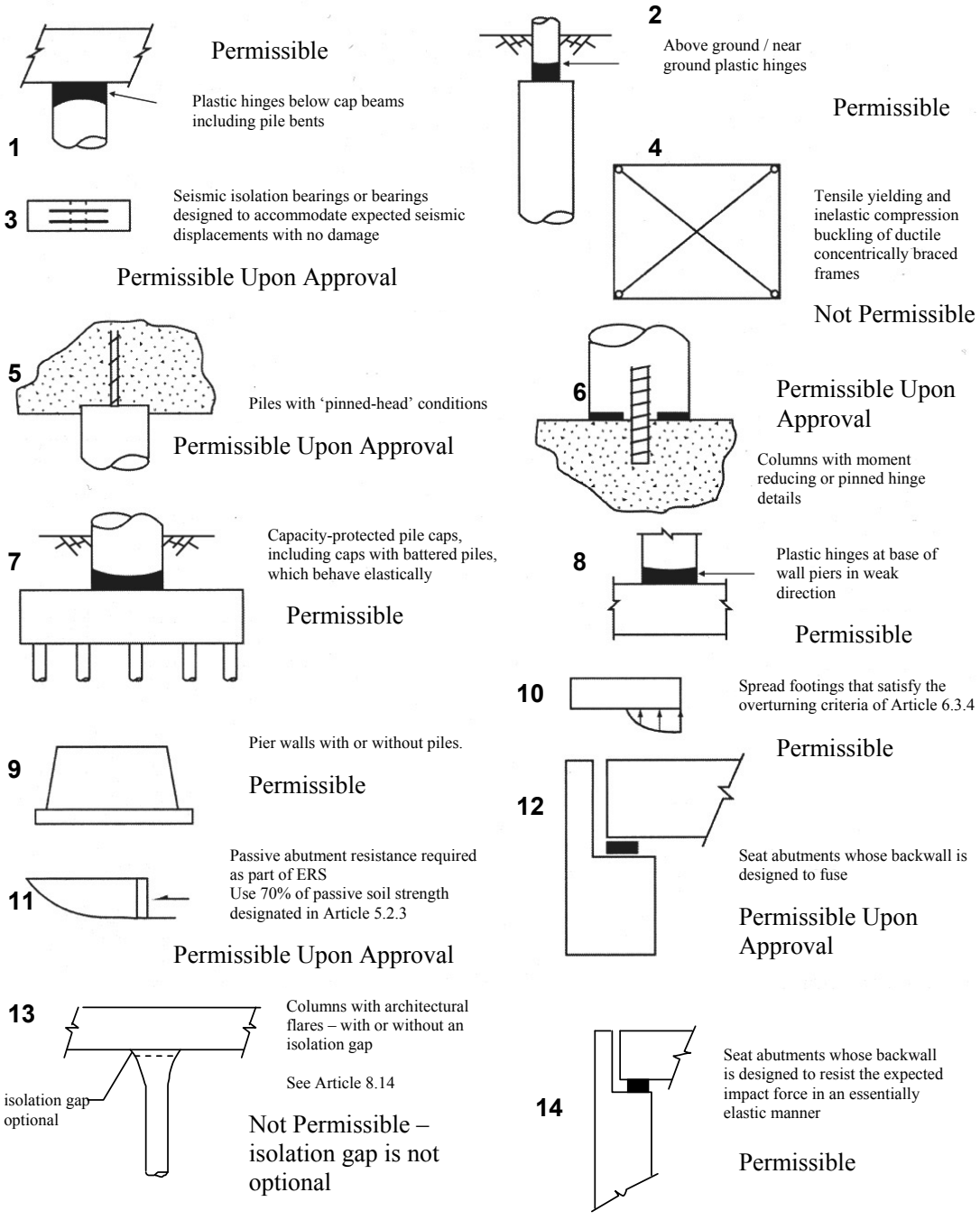

Permissible Earthquake Resisting Elements (ERE)
Figure 3.3-1b

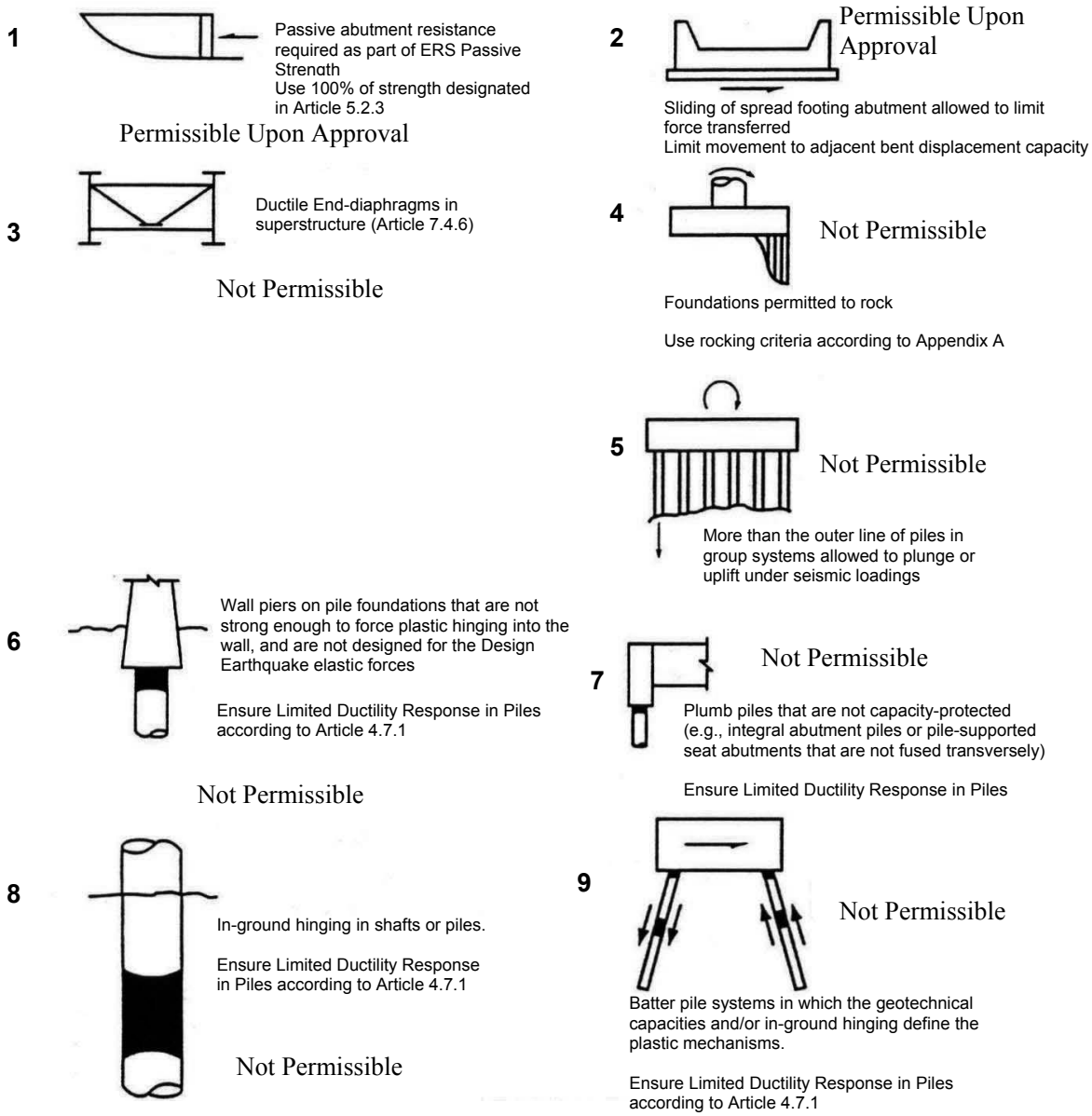

Permissible Earthquake Resisting Elements that Require Owner's Approval (ERE)
Figure 3.3-2

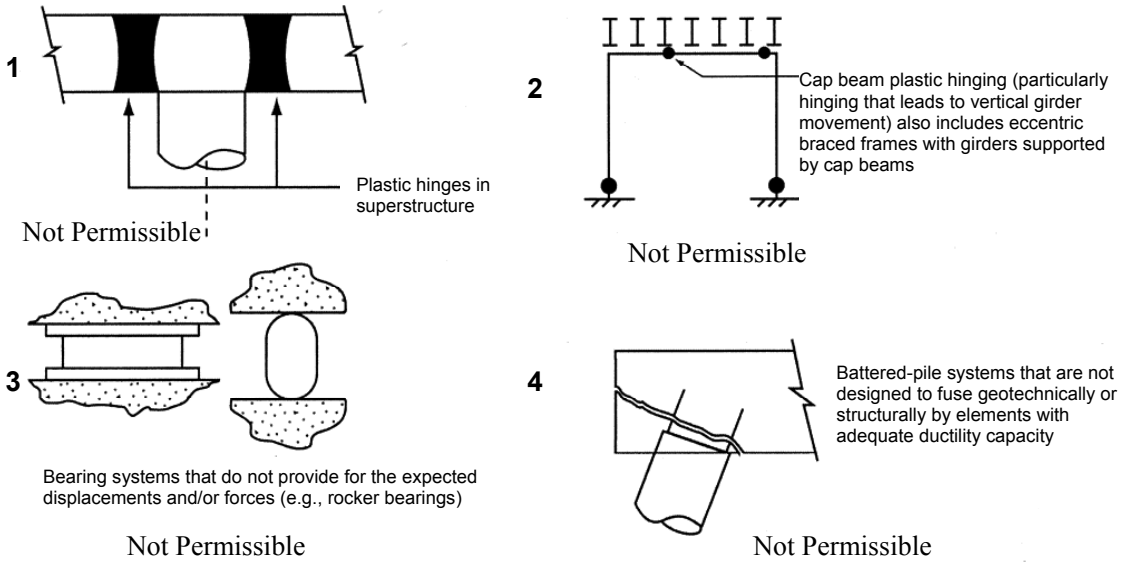

Earthquake Resisting Elements that are not Recommended for New Bridges
Figure 3.3-3

4.3.4 Computer Analysis Verification

The computer results shall be verified to ensure accuracy and correctness. The designer should use the following procedures for model verification:

- Using graphics to check the orientation of all nodes, members, supports, joint and member releases. Make sure that all the structural components and connections correctly model the actual structure.
- Check dead load reactions with hand calculations. The difference should be less than 5 percent.
- Calculate fundamental and subsequent modes by hand and compare results with computer results.
- Check the mode shapes and verify that structure movements are reasonable.
- Increase the number of modes to obtain 90 percent or more mass participation in each direction. SEISAB/GTSTRUDL/SAP2000 directly calculates the percentage of mass participation.
- Check the distribution of lateral forces. Are they consistent with column stiffness? Do small changes in stiffness of certain columns give predictable results?

4.3.5 Earthquake Restrainers

Span unseating is a common problem for existing bridges when the seat width is not sufficient. As a retrofit measure, longitudinal earthquake restrainers are used to tie bridge superstructure sections together at in-span hinges and at locations with expansion joints.

Longitudinal restrainers are high strength bars with both ends anchored on both sides of the adjacent units. A minimum two-inch gap should be maintained at one end of the restrainer to allow for thermal movement. High strength cable may be utilized if the rod cannot fit because of complex geometry, such as: a curved bridge or the movable portion of a ferry terminal.

Bridge Special provision BSP022604.GB6 specifies the current material requirements for the high strength steel bars.

Transverse restrainers are provided to prevent shear failure of the longitudinal restrainers during an earthquake. If the longitudinal restrainers cross a concrete or steel diaphragm, the holes in the diaphragm should be at least one inch larger than the diameter of the high strength steel bars. The transverse restrainer shall limit the bridge transverse movement to less than ½ inch.

A satisfactory method for designing the size and number of restrainers required at expansion joints is not currently available. Adequate seat shall be provided to prevent unseating as a primary requirement. For retrofit, earthquake restrainers shall be designed in accordance with the Caltrans Equivalent Static Analysis method and checked with AASHTO LRFD Section 3.10.9.5.

4.99 Bibliography

AASHTO LRFD Bridge Design Specifications, 4th Edition, 2007 and Successive Interims.

AASHTO Guide specifications for LRFD Seismic Bridge Design, May, 2007.

Caltrans, 1989, Bridge Design Aids-Equivalent Static Analysis of Restrainers, California Department of Transportation, Sacramento, California, pp 14-11 to 14-25.

FHWA *Seismic Retrofitting Manual for Highway Structures: Part 1-Bridges*, Publication No. FHWA-HRT-06-032, January 2006.

Earthquake Probability Example

The probability, P, that an earthquake can occur within a certain time frame, t_L, can be estimated using Poisson's distribution:

$$P = 1 - e^{-\lambda_a t_L}$$

For example, assume the average return time or recurrence of an earthquake is 100 years, estimate the probability that it will occur in the next 100 years.

Let T_a = mean return period in years = $1/\lambda_a$

Where: λ_a = average annual probability that the peak ground acceleration will exceed a certain acceleration, "a".

In a typical design situation, the designer is interested in the probability that such a peak exceeds "a" during the life of the structure, t_L.

For the earthquake recurrence example, T_a = 100 years, λ_a = 1/100 = 0.01 and t_L = 100 years:

$$P = 1 - e^{-\lambda_a t_L} = 1 - e^{-0.01(100)} = 0.63 \text{ or } 63\%$$

Using the same earthquake, determine the chance that the same earthquake will occur within the next 20 years:

$$P = 1 - e^{\lambda_a t_L} = 1 - e^{-0.01(20)} = 0.18 \text{ or } 18\%$$

An earthquake with a peak ground acceleration coefficient map with a 7% probability of exceedance in 75 years corresponds to a return period of 1000 years.

Proof: T_a = 1000 years, λ_a = 1/1000 and t_L = 75 years

$$P = 1 - e^{\lambda_a t_L} = 1 - e^{-(1/1000)(75)} = 0.0723 \text{ or } 7\% \text{ Checks}$$

Appendix 4.6-B1 Design Examples of Seismic Retrofits

Earthquake Restrainer Example

Bridge Type: Multiple Simple Spans

This Design Example is based on CALTRAN's *Seismic Design References* (1997)

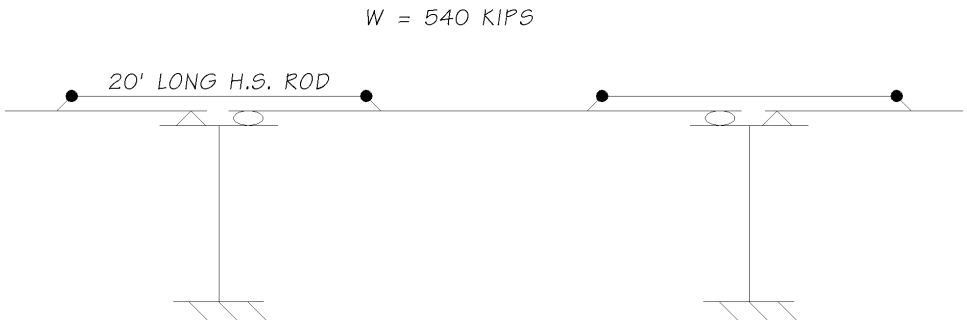

Seismic Data: Acceleration Coeficient, A = 0.3g; Soil Type II, S = 1.2
Dead Load of the Span = 540 kips

Bearings: Roller Bearings with no longitudinal restraint. Shear blocks to be added to provide transverse restraint.

Restrainers: 20 foot long High-Strength steel rods (ASTM F1554 Grade 105)
F_y = 105 ksi and E = 29,000 ksi
2 inch gap at end of High-Strength rod

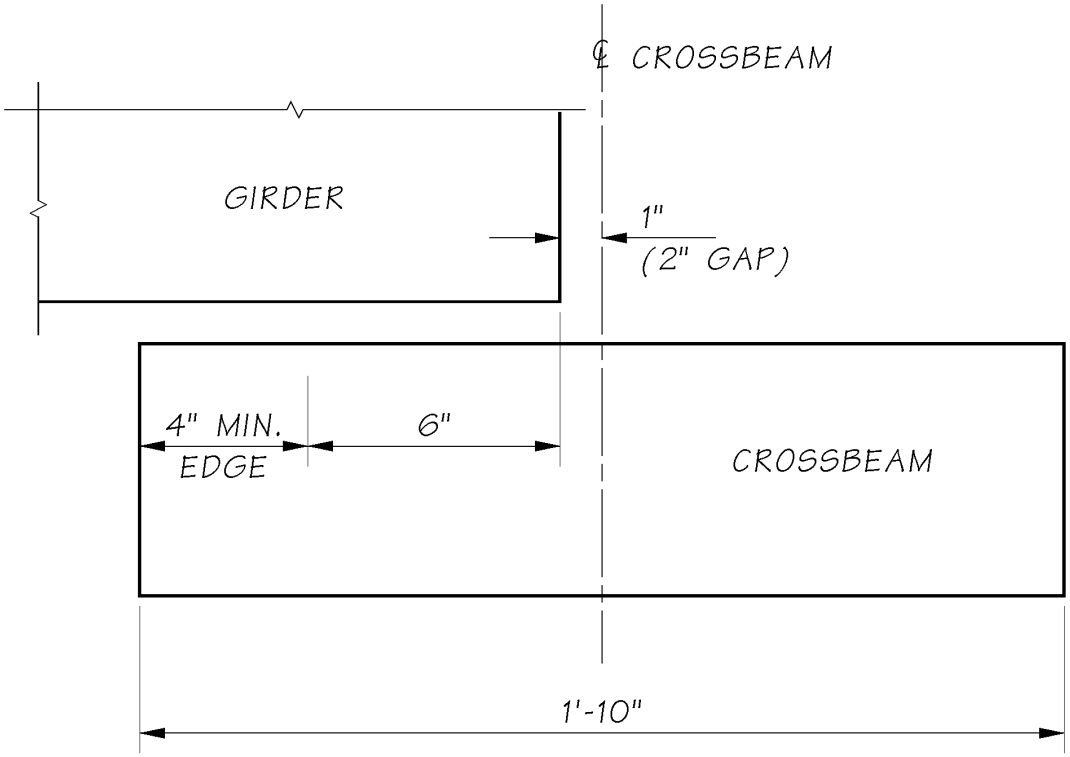

Calculate Available Seat Width: (22"/2) – 4" –1" = 6 inches

Determine Maximum Restrainer Deflection (D_r):

Let D_y = max. elastic deformation of rod when restrainer is stressed to F_y

$D_y = F_yL/E$ = (105 ksi)(20ft)(12in/ft)/(29,000 ksi) =	0.9 inches
D_{gap}	2.0
D_r = Resultant Longitudinal Displacement = $D_y + D_{gap}$ =	2.9 inches < 6 inches

Try four 1 inch diameter rods: $A_g = 4(0.785in^2) = 3.14\ in^2$ Use A_g of plain rod for stiffness/ elongation calculations and use tensile area, A_t, for stress check.

(Note: $A_g = A_t$ if a high strength rod is threaded for its full length):

Calculate the stiffness, K_t ,provided by the restrainer rods:

$$K_t = \frac{F_y(A_g)}{D_r} = \frac{105(3.14)}{2.9} = 114 kips/inch$$

Calculate the period, T:

$$T = 2\rho\sqrt{\frac{W}{gk_t}} = 0.32\sqrt{\frac{540}{114}} = 0.70\,\text{sec}\,onds$$

where: T = period in seconds
W = Dead Load of the span = 540 kips
g = 32.2 ft/sec^2 x 12in/ft = 386 inches/sec^2
K_t = 114 kips/inch

Calculate the Elastic Seismic Response Coefficient, C_s, for Multimodal Analysis:

$$Cs = \frac{1.2AS}{T^{2/3}} = \frac{1.2(0.30)(1.2)}{0.70^{0.67}} = 0.5g$$

when A ≥ 0.30g, Cs need not exceed 2.0A

Therefore, C_s = 0.55g < 0.6g, okay

Calculate the seismic force and tensile stress, f_t, to be resisted by the restrainers:

Use tensile area: A_t = 0.606 in^2 per restrainer rod

Seismic Force = C_sW = 0.55(540) = 297 kips

$$f_t = \frac{C_sW}{A_t} = \frac{297}{4(0.606)} = 122.5ksi > 105ksi$$

No Good for Stress

Calculate the elastic elongation in the four 1 inch diameter retrainer rods, D_t:

$$D_t = \frac{C_sW}{K_t} = \frac{297}{114} = 2.6inches < D_r = 2.9inches$$

okay

The elastic elongation of the restrainers is less than the resultant displacement. However, the tensile stress at the threaded ends of the rod exceeds fy. Therefore, it is necessary to increase the number of restrainers or increase the diameter of the restrainers in order to reduce the elastic elongation.

Try four 1-1/8 inch diameter x 8UN threaded rods: $A_g = 4(0.994\ in^2) = 3.98\ in^2$

$$K_t = \frac{F_y(A_g)}{D_r} = \frac{105(3.98)}{2.9} = 144kips/inch$$

$$T = 2\rho\sqrt{\frac{W}{gk_t}} = 0.32\sqrt{\frac{540}{144}} = 0.62\,\text{sec}onds$$

$$Cs = \frac{1.2AS}{T^{2/3}} = \frac{1.2(0.30)(1.2)}{0.62^{0.67}} = 0.60g = 0.6g$$

$$D_t = \frac{C_sW}{K_t} = \frac{0.6(540)}{144} = 2.25inches < D_r = 2.9inches$$

okay for Elongation

$$f_t = \frac{C_sW}{A_t} = \frac{324}{4(0.790)} = 102.5ksi < 105ksi$$

okay for Stress

Use four 1-1/8 inch diameter x 20 ft long ASTM F1554 Grade 105 High-Strength Rods with Fy = 105 ksi. Specify a Charpy V-Notch (CVN) of 25 ft-lbs @ 40°F, or Supplemental Requirement S5 (15 ft-lbs @ -40°F.***BRIDGE DESIGN MANUAL***

Circular Column Steel Jacket Retrofit Example

Lateral tie reinforcement of #4 bars at 12” centers is inadequate confinement for the longitudinal column reinforcement.

Concrete core is adequate to resist seismic transverse shear force

The column is 3 ft. in diameter. Assume clearance is 1” between column and steel jacket.

Determine thickness of steel jacket.

Using the FHWA Guidelines from *Seismic Retrofitting Manual for Highway Bridges*, (1995):

$$t = \frac{f_{cc} D}{58}$$

where: t = thickness of steel jacket in inches
f_{cc} = confining concrete core pressure in ksi = 0.300 ksi
D = 36” + 2” = 38”

$$\therefore t = \frac{(0.3)(38)}{58} = 0.20" > 0.25" \min$$

Use 1/4” thick steel jacket with Fy = 36 ksi

Lateral tie reinforcement of #4 bars at 12” centers is inadequate confinement for the longitudinal column reinforcement.

Concrete core is adequate to resist seismic transverse shear force

The column is 5 ft. in diameter. Assume clearance is 1” between column and steel jacket.

Determine thickness of steel jacket.

Using the FHWA Guidelines from *Seismic Retrofitting Manual for Highway Bridges*, (1995):

$$t = \frac{f_{cc} D}{58}$$

where: t = thickness of steel jacket in inches
f_{cc} = confining concrete core pressure in ksi = 0.300 ksi
D = 60” + 2” = 62”

$$\therefore t = \frac{(0.3)(62)}{58} = 0.32" > 0.25" \min$$

Use 3/8” thick steel jacket with Fy = 36 ksi

A seismic analysis shows the 4 ft. diameter column is required to undergo a plastic drift angle of 0.045 radians.

The existing lateral confining reinforcement is inadequate.

Longitudinal bars are #11 Grade 40 reinforcement and $\rho_l = 0.04$ or 4 %.

The ratio $\frac{P}{f'_{ca} A_g} = 0.2$

where: P = resultant axial force in kips
$f'_{ca} = 1.5(f'_c) \approx 5$ ksi for an original concrete design strength of 3,000psi
Ag = gross concrete column area in in^2

Determine $\frac{t_j}{D} \geq 0.01$ from Figure 8.5(a) *Seismic Design of Bridges*, Priestley, Seibel, and Calvi (1996), p. 592

$$\therefore t_j = 0.01(48 + 2) = 0.50"$$

Use ½" thick steel jacket with Fy = 36 ksi

Lateral tie reinforcement of #4 bars at 12" centers is inadequate confinement for the longitudinal column reinforcement.

Concrete core is adequate to resist seismic transverse shear force

The size of the rectangular column is 2' x 6'

Check size of ellipse to provide 1" clearance between column and steel jacket.

$$\frac{x^2}{a^2} + \frac{y^2}{b^2} = 1$$

After several tries, use an elliptical shape such that:

Long axis = 7'-2" such that $a = 3'-7"$ and

Short axis = 4'-2" $b = 2'-1"$

Find equivalent diameter, D = 2a = 86”

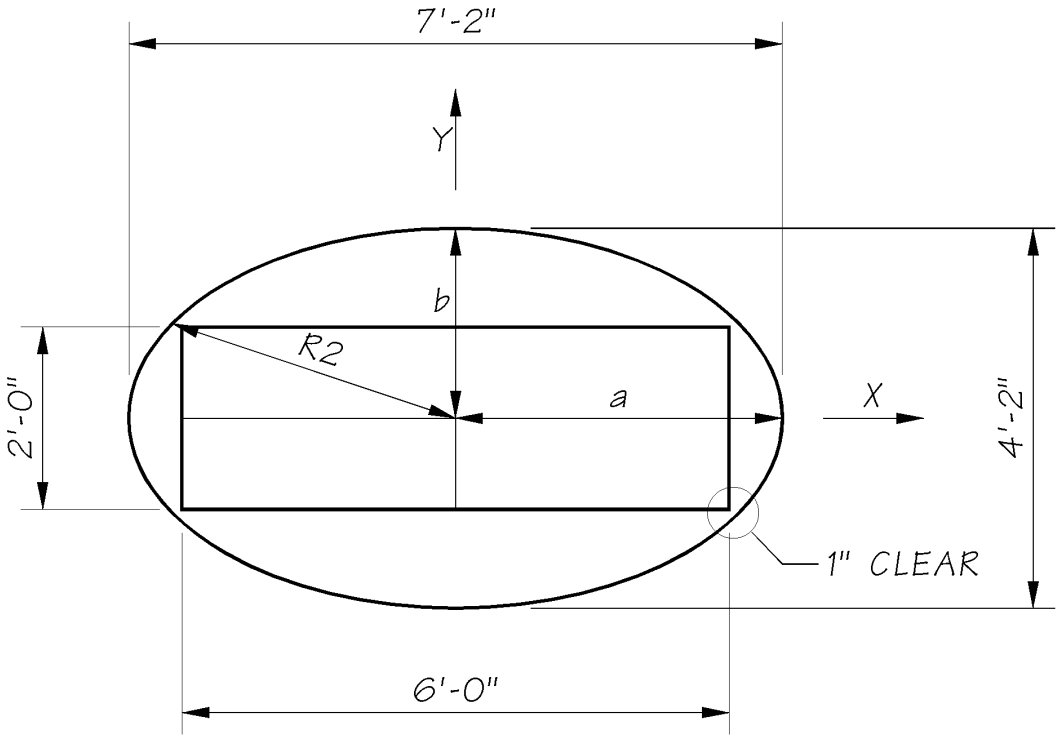

Using the FHWA Guidelines from *Seismic Retrofitting Manual for Highway Bridges*, (1995):

$$t > \frac{f_{cc} D}{58}$$

$$\therefore t = \frac{(0.3)(86")}{58} = 0.44"$$

Use ½” thick steel jacket with Fy = 36 ksi

Lateral tie reinforcement of #4 bars at 12” centers is inadequate confinement for the longitudinal column reinforcement.

Concrete core is adequate to resist seismic transverse shear force

The size of the rectangular column is 4’ x 6’

Check size of ellipse to provide 1” clearance between column and steel jacket.

$$\frac{x^2}{a^2} + \frac{y^2}{b^2} = 1$$

After several tries, use an elliptical shape such that:

Long axis = 8’-2” such that $a = 4'-1"$ and

Short axis = 6’-2” such that $b = 3'-1"$

Find equivalent diameter, D = 2a = 98”

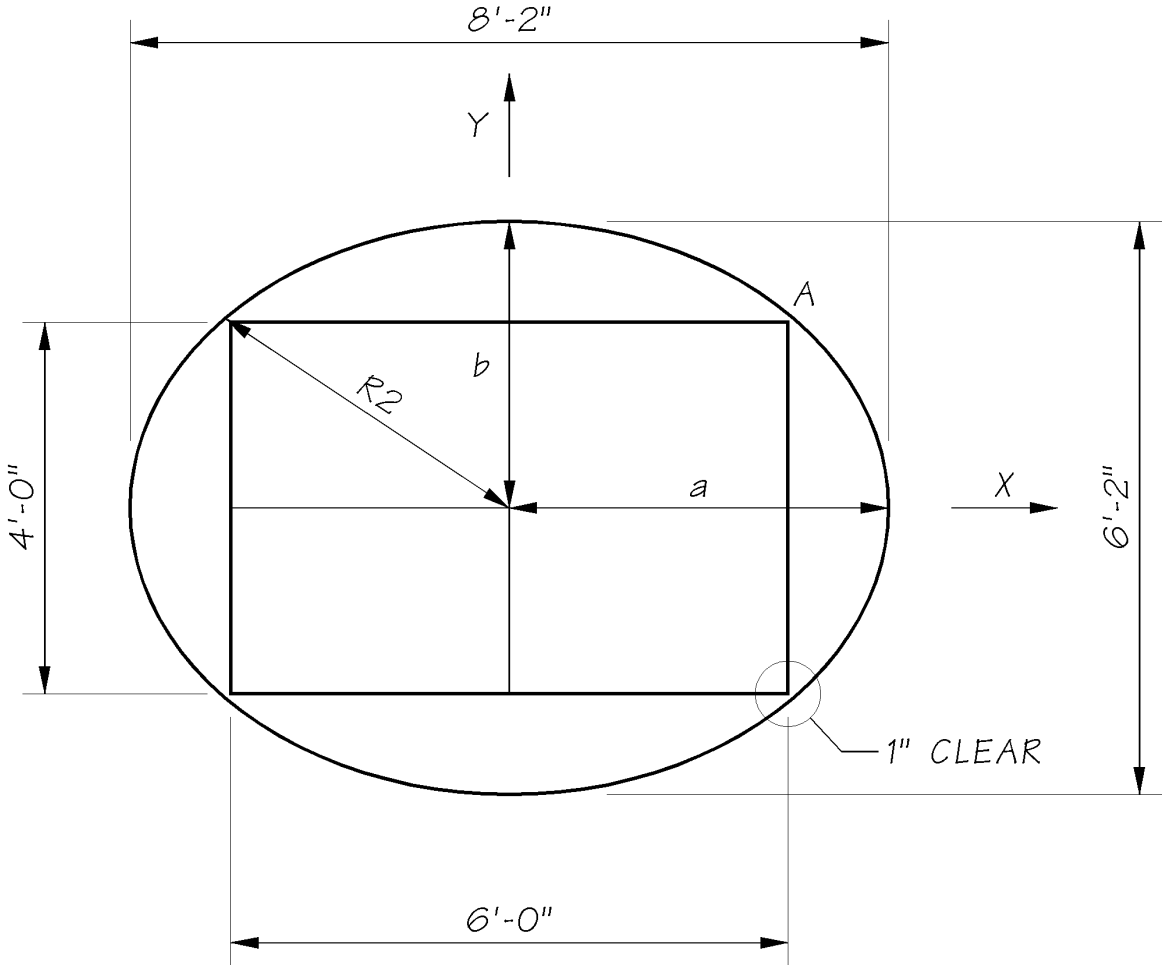

Using the FHWA Guidelines from *Seismic Retrofitting Manual for Highway Bridges*, (1995):

$$\therefore t = \frac{(0.3)(98")}{58} = 0.51"$$

Use ½” thick steel jacket with Fy = 36 ksi

Chapter 5 Concrete Structures Contents

5.0	**General**		5.0-1
5.1	**Material Properties**		5.1-1
	5.1.1	Concrete Properties	5.1-1
	5.1.2	Reinforcing Steel	5.1-6
	5.1.3	Prestressing Steel	5.1-13
	5.1.4	Prestress Losses	5.1-17
	5.1.5	Prestressing Anchorage Systems	5.1-22
	5.1.6	Ducts	5.1-22
5.2	**Design Consideration**		5.2-1
	5.2.1	Design Limit States	5.2-1
	5.2.2	Design Criteria	5.2-1
	5.2.3	Service Limit State	5.2-2
	5.2.4	Strength Limit State	5.2-3
	5.2.5	Strut-and-tie Model	5.2-13
	5.2.6	Deflection and Camber	5.2-13
	5.2.7	Serviceability	5.2-15
	5.2.8	Connections (Joints)	5.2-15
	5.2.9	Revised Provisions for Flexural Design	5.2-16
	5.2.10	Shrinkage and Temperature Reinforcement	5.2-20
	5.2.11	Minimum Reinforcement Requirement	5.2-21
5.3	**Reinforced Concrete Box Girder Bridges**		5.3-1
	5.3.1	Box Girder Basic Geometries	5.3-1
	5.3.2	Reinforcement	5.3-6
	5.3.3	Crossbeam	5.3-14
	5.3.4	End Diaphragm	5.3-19
	5.3.5	Dead Load Deflection and Camber	5.3-22
	5.3.6	Thermal Effects	5.3-23
	5.3.7	Hinges	5.3-23
	5.3.8	Utility Openings	5.3-23
5.4	**Hinges and Inverted T-Beam Pier Caps**		5.4-1
5.5	**Bridge Widenings**		5.5-1
	5.5.1	Review of Existing Structures	5.5-1
	5.5.2	Analysis and Design Criteria	5.5-2
	5.5.3	Removing Portions of the Existing Structure	5.5-6
	5.5.4	Attachment of Widening to Existing Structure	5.5-7
	5.5.5	Expansion Joints	5.5-18
	5.5.6	Possible Future Widening for Current Designs	5.5-20
	5.5.7	Bridge Widening Falsework	5.5-20
	5.5.8	Existing Bridge Widenings	5.5-20

5.6	**Precast Prestressed Girder Superstructures**		5.6-1
	5.6.1	WSDOT Standard Prestressed Girders	5.6-1
	5.6.2	Criteria for Girder Design	5.6-4
	5.6.3	Fabrication and Handling	5.6-12
	5.6.4	Superstructure Optimization	5.6-16
	5.6.5	Repair of Damaged Girders at Fabrication	5.6-20
	5.6.6	Repair of Damaged Bridge Girders	5.6-21
	5.6.7	Short Span Precast Prestressed Bridges	5.6-23
	5.6.8	Prestressed Concrete Precast Tub Girders	5.6-24
	5.6.9	Prestressed Girder Checking Requirement	5.6-24
	5.6.10	Review of shop plans for pretensioned girders	5.6-25
5.7	**Roadway Slab**		5.7-1
	5.7.1	Roadway Slab Requirements	5.7-1
	5.7.2	Slab Reinforcement	5.7-3
	5.7.3	Stay-In-Place Deck Panels	5.7-9
	5.7.4	Concrete Bridge Deck Protection Systems	5.7-10
5.8	**Cast-in-Place Post-tensioned Bridges**		5.8-1
	5.8.1	Design Parameters	5.8-1
	5.8.2	Analysis	5.8-10
	5.8.3	Post-tensioning	5.8-12
	5.8.4	Shear	5.8-17
	5.8.5	Temperature Effects	5.8-19
	5.8.6	Construction	5.8-20
	5.8.7	Post-Tensioning Notes — Cast-in-Place Girders	5.8-22
5.9	**Spliced Precast Girders**		5.9-1
	5.9.1	Definitions	5.9-1
	5.9.2	WSDOT Criteria for use of Spliced Girders	5.9-2
	5.9.3	Girder Segment Design	5.9-3
	5.9.4	Joints Between Segments	5.9-4
	5.9.5	Review of shop plans for precast post-tensioned spliced-girders	5.9-5
	5.9.6	Post-Tensioning Notes ~ Precast Post-Tensioning Spliced-Girders	5.9-6
5.99	**Bibliography**		5.99-1

Appendix A

Appendix 5.1-A1	Standard Hooks	5.1-A1-1
Appendix 5.1-A2	Minimum Reinforcement Clearance and Spacing for Beams and Columns	5.1-A2-1
Appendix 5.1-A3	Reinforcing Bar Properties	5.1-A3-1
Appendix 5.1-A4	Tension Development Length of Deformed Bars	5.1-A4-1
Appendix 5.1-A5	Compression Development Length and Minimum Lap Splice of Grade 60 Bars	5.1-A5-1
Appendix 5.1-A6	Tension Development Lengthof 90º and 180º Standard Hooks	5.1-A6-1
Appendix 5.1-A7	Tension Lap Splice Lengths of Grade 60 Uncoated Bars ~ Class B	5.1-A7-1
Appendix 5.1-A8	Prestressing Strand Properties and Development Length	5.1-A8-1

Appendix 5.2-A1	Working Stress Design	5.2-A1-1
Appendix 5.2-A2	Working Stress Design	5.2-A2-1
Appendix 5.2-A3	Working Stress Design	5.2-A3-1
Appendix 5.3-A1	Positive Moment Reinforcement	5.3-A1-1
Appendix 5.3-A2	Negative Moment Reinforcement	5.3-A2-1
Appendix 5.3-A3	Adjusted Negative Moment Case I (Design for M @ Face of Support)	5.3-A3-1
Appendix 5.3-A4	Adjusted Negative Moment Case II (Design for M @ 1/4 Point)	5.3-A4-1
Appendix 5.3-A5	Cast-In-Place Deck Slab Design for Positive Moment Regions f'c=4, 0 ksi	5.3-A5-1
Appendix 5.3-A6	Cast-In-Place Deck Slab Design for Negative Moment Regions f'c=4, 0 ksi	5.3-A6-1
Appendix 5.3-A7	Slab Overhang Design-Interior Barrier Segment	5.3-A7-1
Appendix 5.3-A8	Slab Overhang Design-End Barrier Segment	5.3-A8-1
Appendix 5.6-A1-1A	Span Capability of Prestressed W Girders with Future Wearing Surface	5.6-A1-1A -1
Appendix 5.6-A1-1B	Span Capability of W Girders without Future Wearing Surface	5.6-A1-1B-1
Appendix 5.6-A1-2A	Span Capability of Prestressed Wide Flange Girders with Future Wearing Surface	5.6-A1-2A-1
Appendix 5.6-A1-2B	Span Capability of Prestressed Wide Flange Girders without Future Wearing Surface	5.6-A1-2B-1
Appendix 5.6-A1-3	Span Capability of Thin Flange Bulb Tee Girders	5.6-A1-3-1
Appendix 5.6-A1-4	Span Capability of Trapezoidal Tub Girders without Top Flange	5.6-A1-4-1
Appendix 5.6-A1-5	Span Capability of Trapezoidal Tub Girders with Top Flange for S-I-P Deck Panels	5.6-A1-5-1
Appendix 5.6-A1-6	Span Capability of 1'-0" Solid Slabs with 5" CIP Topping	5.6-A1-6-1
Appendix 5.6-A1-7	Span Capability of 1'-6" Voided Slab with 5" CIP Topping	5.6-A1-7-1
Appendix 5.6-A1-8	Span Capability of 2'-2" Voided Slab with 5" CIP Topping	5.6-A1-8-1
Appendix 5.6-A1-9	Span Capability of Precast Prestressed Double Tee Girders	5.6-A1-9-1
Appendix 5.6-A1-10	Span Capability Precast Prestressed Ribbed Girders	5.6-A1-10-1
Appendix 5.6-A1-11	Span Capability of Deck Bulb Tee Girders	5.6-A1-11-1
Appendix 5.6-A1-12	Span Capability of Post-Tensioned Spliced I-Girders	5.6-A1-12-1
Appendix 5.6-A1-13	Span Capability of Post-Tensioned Spliced Tub Girders	5.6-A1-13-1
Appendix 5.6-A1-1	I-Girder Section	5.6-A1-1
Appendix 5.6-A1-2	Decked Girder Section	5.6-A1-2
Appendix 5.6-A1-3	Spliced-Girder Section	5.6-A1-3
Appendix 5.6-A1-4	Tub Section	5.6-A1-4
Appendix 5.6-A2-1	Single Span Prestressed Girder Construction Sequence	5.6-A2-1
Appendix 5.6-A2-2	Multiple Span Prestressed Girder Construction Sequence	5.6-A2-2
Appendix 5.6-A2-3	Raised Crossbeam Prestressed Girder Construction Sequence	5.6-A2-3
Appendix 5.6-A3-1	W42G Girder Details 1 of 2	5.6-A3-1
Appendix 5.6-A3-2	W42G Girder Details 2 of 2	5.6-A3-2
Appendix 5.6-A3-3	W42G End Diaphragm on Girder Details	5.6-A3-3
Appendix 5.6-A3-4	W42G Abutment Type Pier Diaphragm Details	5.6-A3-4
Appendix 5.6-A3-5	W42G Fixed Flush-Face Diaphragm at Intermediate Pier Details	5.6-A3-5
Appendix 5.6-A3-6	W42G Fixed Recessed-Face Diaphragm at Intermediate Pier Details	5.6-A3-6
Appendix 5.6-A3-7	W42G Hinge Diaphragm at Intermediate Pier Details	5.6-A3-7

Appendix 5.6-A3-8	W42G Intermediate Diaphragm Details	5.6-A3-8
Appendix 5.6-A3-9	W42G Miscellaneous Bearing Details	5.6-A3-9
Appendix 5.6-A4-1	W50G Girder Details 1 of 2	5.6-A4-1
Appendix 5.6-A4-2	W50G Girder Details 2 of 2	5.6-A4-2
Appendix 5.6-A4-3	W50G End Diaphragm on Girder Details	5.6-A4-3
Appendix 5.6-A4-4	W50G Abutment Type Pier Diaphragm Details	5.6-A4-4
Appendix 5.6-A4-5	W50G Fixed Flush-Face Diaphragm at Intermediate Pier Details	5.6-A4-5
Appendix 5.6-A4-6	W50G Fixed Recessed-Face Diaphragm at Intermediate Pier Details	5.6-A4-6
Appendix 5.6-A4-7	W50G Hinge Diaphragm at Intermediate Pier Details	5.6-A4-7
Appendix 5.6-A4-8	W50G Intermediate Diaphragm Details	5.6-A4-8
Appendix 5.6-A4-9	W50G Miscellaneous Bearing Details	5.6-A4-9
Appendix 5.6-A5-1	W58G Girder Details 1 of 3	5.6-A5-1
Appendix 5.6-A5-2	W58G Girder Details 2 of 3	5.6-A5-2
Appendix 5.6-A5-3	W58G Girder Details 3 of 3	5.6-A5-3
Appendix 5.6-A5-4	W58G End Diaphragm on Girder Details	5.6-A5-4
Appendix 5.6-A5-5	W58G Abutment Type Pier Diaphragm Details	5.6-A5-5
Appendix 5.6-A5-6	W58G Fixed Flush-Face Diaphragm at Intermediate Pier Details	5.6-A5-6
Appendix 5.6-A5-7	W58G Fixed Recessed-Faces Diaphragm at Intermediate Pier Details	5.6-A5-7
Appendix 5.6-A5-8	W58G Intermediate Diaphragm Details	5.6-A5-8
Appendix 5.6-A5-9	W58G Miscellaneous Bearing Details	5.6-A5-9
Appendix 5.6-A5-10	W58G Miscellaneous Bearing Details	5.6-A5-10
Appendix 5.6-A6-1	W74G Girder Details 1 of 3	5.6-A6-1
Appendix 5.6-A6-2	W74G Girder Details 2 of 3	5.6-A6-2
Appendix 5.6-A6-3	W74G Girder Details 3 of 3	5.6-A6-3
Appendix 5.6-A6-4	W74G Abutment Type Pier Diaphragm Details	5.6-A6-4
Appendix 5.6-A6-5	W74G Fixed Flush-Face Diaphragm at Intermediate Pier Details	5.6-A6-5
Appendix 5.6-A6-6	W74G Fixed Recessed-Face Diaphragm at Intermediate Pier Details	5.6-A6-6
Appendix 5.6-A6-7	W74G Hinge Diaphragm at Intermediate Pier Details	5.6-A6-7
Appendix 5.6-A6-8	W74G Intermediate Diaphragm Details	5.6-A6-8
Appendix 5.6-A6-9	W74G Miscellaneous Bearing Details	5.6-A6-9
Appendix 5.6-A6-10	W74G Miscellaneous Bearing Details	5.6-A6-10
Appendix 5.6-A7-1	Girder Details 3 of 3	5.6-A7-1
Appendix 5.6-A7-2	Additional Extended Strands	5.6-A7-2
Appendix 5.6-A7-3	Miscellaneous Bearing Details	5.6-A7-3
Appendix 5.6-A7-4	WF42G Girder Details 1 of 3	5.6-A7-4
Appendix 5.6-A7-5	WF42G Girder Details 2 of 3	5.6-A7-5
Appendix 5.6-A7-6	WF42G End Diaphragm on Girder Details	5.6-A7-6
Appendix 5.6-A7-7	WF42G Abutment Type Pier Diaphragm Details	5.6-A7-7
Appendix 5.6-A7-8	WF42G Fixed Flush-Face Diaphragm at Intermediate Pier Details	5.6-A7-8
Appendix 5.6-A7-9	WF42G Fixed Recessed-Face Diaphragm at Intermediate Pier Details	5.6-A7-9
Appendix 5.6-A7-10	WF42G Intermediate Diaphragm Details	5.6-A7-10
Appendix 5.6-A7-11	WF42G Hinge Diaphragm at Intermediate Pier Details	5.6-A7-11

Appendix 5.6-A8-1	WF50G Girder Details 1 of 3	5.6-A8-1
Appendix 5.6-A8-2	WF50G Girder Details 2 of 3	5.6-A8-2
Appendix 5.6-A8-3	WF50G End Diaphragm on Girder Details	5.6-A8-3
Appendix 5.6-A8-4	WF50G Abutment Type Pier Diaphragm Details	5.6-A8-4
Appendix 5.6-A8-5	WF50G Fixed Flush-Face Diaphragm at Intermediate Pier Details	5.6-A8-5
Appendix 5.6-A8-6	WF50G Fixed Recessed-Face Diaphragm at Intermediate Pier Details	5.6-A8-6
Appendix 5.6-A8-7	WF50G Hinge Diaphragm at Intermediate Pier Details	5.6-A8-7
Appendix 5.6-A8-8	WF50G Intermediate Diaphragm Details	5.6-A8-8
Appendix 5.6-A9-1	WF58G Girder Details 1 of 3	5.6-A9-1
Appendix 5.6-A9-2	WF58G Girder Details 2 of 3	5.6-A9-2
Appendix 5.6-A9-3	WF58G End Diaphragm on Girder Details	5.6-A9-3
Appendix 5.6-A9-4	WF58G Abutment Type Pier Diaphragm Details	5.6-A9-4
Appendix 5.6-A9-5	WF58G Fixed Flush-Face Diaphragm at Intermediate Pier Details	5.6-A9-5
Appendix 5.6-A9-6	WF58G Fixed Recessed-face Diaphragm at Intermediate Pier Details	5.6-A9-6
Appendix 5.6-A9-7	WF58G Hinge Diaphragm at Intermediate Pier Details	5.6-A9-7
Appendix 5.6-A9-8	WF58G Intermediate Diaphragm Details	5.6-A9-8
Appendix 5.6-A10-1	WF74G Girder Details 1 of 3	5.6-A10-1
Appendix 5.6-A10-2	WF74G Girder Details 2 of 3	5.6-A10-2
Appendix 5.6-A10-3	WF74G End Diaphragm on Girder Details	5.6-A10-3
Appendix 5.6-A10-4	WF74G Abutment Type Pier Diaphragm Details	5.6-A10-4
Appendix 5.6-A10-5	WF74G Fixed Flush-Face Diaphragm at Intermediate Pier Details	5.6-A10-5
Appendix 5.6-A10-6	WF74G Fixed Recessed-Face Diaphragm at Intermediate Pier Details	5.6-A10-6
Appendix 5.6-A10-7	WF74G Hinge Diaphragm at Intermediate Pier Details	5.6-A10-7
Appendix 5.6-A10-8	WF74G Intermediate Diaphragm Details	5.6-A10-8
Appendix 5.6-A11-1	WF83G Girder Details 1 of 3	5.6-A11-1
Appendix 5.6-A11-2	WF83G Girder Details 2 of 3	5.6-A11-2
Appendix 5.6-A11-3	WF83G End Diaphragm on Girder Details	5.6-A11-3
Appendix 5.6-A11-4	WF83G Abutment Type Pier Diaphragm Details	5.6-A11-4
Appendix 5.6-A11-5	WF83G Fixed Flush-Face Diaphragm at Intermediate Pier Details	5.6-A11-5
Appendix 5.6-A11-6	WF83G Fixed Recessed-Face Diaphragm at Intermediate Pier Details	5.6-A11-6
Appendix 5.6-A11-7	WF83G Hinge Diaphragm at Intermediate Details	5.6-A11-7
Appendix 5.6-A11-8	WF83G Intermediate Diaphragm Details	5.6-A11-8
Appendix 5.6-A12-1	WF95G Girder Details 1 of 3	5.6-A12-1
Appendix 5.6-A12-2	WF95G Girder Details 2 of 3	5.6-A12-2
Appendix 5.6-A12-3	WF95G Eng Diaphragm on Girder Details	5.6-A12-3
Appendix 5.6-A12-4	WF95G Abutment Type Pier Diaphragm Details	5.6-A12-4
Appendix 5.6-A12-5	WF95G Fixed Flush-Face Diaphragm at Intermediate Pier Details	5.6-A12-5
Appendix 5.6-A12-6	WF95G Fixed Recessed-Face Diaphragm at Intermediate Pier Details	5.6-A12-6
Appendix 5.6-A12-7	WF95G Hinge Diaphragm at Intermediate Pier Details	5.6-A12-7
Appendix 5.6-A12-8	WF95G Intermediate Diaphragm Details	5.6-A12-8

Appendix 5.6-A13-1	Bulb Tee Girder Details 2 of 3	5.6-A13-1
Appendix 5.6-A13-2	Bulb Tee Girder Details 3 of 3	5.6-A13-2
Appendix 5.6-A13-3	Bulb Tee Girder Miscellaneous Bearing Details	5.6-A13-3
Appendix 5.6-A13-4	W32BTG Girder Details 1 of 3	5.6-A13-4
Appendix 5.6-A14-1	W38BTG Girder Details 1 of 3	5.6-A14-1
Appendix 5.6-A14-1	W38BTG Girder Details 1 of 3	5.6-A14-1
Appendix 5.6-A15-1	W62BTG Girder Details 1 of 3	5.6-A15-1
Appendix 5.6-A16-1	Tub Girder Miscellaneous Bearing Details	5.6-A16-1
Appendix 5.6-A16-2	Tub Girder Details 1 of 3	5.6-A16-2
Appendix 5.6-A16-3	Tub Girder Details 2 of 3	5.6-A16-3
Appendix 5.6-A16-4	Tub Girder Details 3 of 3	5.6-A16-4
Appendix 5.6-A16-5	Tub Girder End Diaphragm on Girder Details	5.6-A16-5
Appendix 5.6-A16-6	Tub Girder Raised Crossbeam Details	5.6-A16-6
Appendix 5.6-A17-1	Tub S-I-P Deck Panel Girder Details 1 of 4	5.6-A17-1
Appendix 5.6-A17-2	Tub S-I-P Deck Panel Girder – Details 2 of 4	5.6-A17-2
Appendix 5.6-A17-3	Tub S-I-P Deck Panel Girder – Details 3 of 4	5.6-A17-3
Appendix 5.6-A17-4	Tub S-I-P Deck Panel Girder – Details 4 of 4	5.6-A17-4
Appendix 5.6-A17-5	Tub S-I-P Deck Panel Girder – End Diaphragm on Girder Details	5.6-A17-5
Appendix 5.6-A17-6	Tub S-I-P Deck Panel Girder – Raised Crossbeam Details	5.6-A17-6
Appendix 5.6-A17-7	Tub S-I-P Deck Panel Girder Miscellaneous Bearing Details	5.6-A17-7
Appendix 5.6-A18-1	Precast Prestressed Stay-in-Place Deck Panel Details	5.6-A18-1
Appendix 5.6-A19-1	1’-0” Solid Slab Details 1 of 2	5.6-A19-1
Appendix 5.6-A19-2	1’-0” Solid Slab Details 2 of 2	5.6-A19-2
Appendix 5.6-A20-1	1’-6” Voided Details 1 of 2	5.6-A20-1
Appendix 5.6-A20-2	1’-6” Voided Details 2 of 2	5.6-A20-2
Appendix 5.6-A21-1	2’-2” Voided Slab Details 1 of 2	5.6-A21-1
Appendix 5.6-A21-2	2’-2” Voided Slab Details 2 of 2	5.6-A21-2
Appendix 5.6-A21-3	Voided Slab End Pier	5.6-A21-3
Appendix 5.6-A21-4	Hinge Diaphragm at Intermediate Pier Details	5.6-A21-4
Appendix 5.6-A22-1	Precast Prestressed Ribbed Girder Details 1 of 2	5.6-A22-1
Appendix 5.6-A22-2	Precast Prestressed Ribbed Girder Details 2 of 2	5.6-A22-2
Appendix 5.6-A22-3	Precast Prestressed Ribbed Girder Pier Details	5.6-A22-3
Appendix 5.6-A23-1	Precast Prestressed Double T Details 1 of 2	5.6-A23-1
Appendix 5.6-A23-2	Precast Prestressed Double T Details 2 of 2	5.6-A23-2
Appendix 5.6-A24-1	W35DG Deck Bulb Tee Girder Details 1 of 2	5.6-A24-1
Appendix 5.6-A24-2	W35DG Deck Bulb Tee Girder Details 2 of 2	5.6-A24-2
Appendix 5.6-A24-3	W35DG Deck Bulb Tee Diaphragm Details	5.6-A24-3
Appendix 5.6-A25-1	W41DG Bulb Tee Girder Details 1 of 2	5.6-A25-1
Appendix 5.6-A25-2	W41DG Bulb Tee Girder Details 2 of 2	5.6-A25-2
Appendix 5.6-A25-3	W41DG Deck Bulb Tee Girder Diaphragm Details	5.6-A25-3
Appendix 5.6-A26-1	W53DG Bulb Tee Girder Details 1 of 2	5.6-A26-1
Appendix 5.6-A26-2	W53DG Bulb Tee Girder Details 2 of 2	5.6-A26-2
Appendix 5.6-A26-3	W53DG Deck Bulb Tee Diaphragm Details	5.6-A26-3
Appendix 5.6-A27-1	W65DG Deck Bulb Tee Girder Details 1 of 2	5.6-A27-1
Appendix 5.6-A27-2	W65DG Deck Bulb Tee Girder Details 2 of 2	5.6-A27-2
Appendix 5.6-A27-3	W65DG Deck Bulb Tee Girder Diaphragm Details	5.6-A27-3
Appendix 5.6-A27-4	Deck Bulb Tee Girder Diaphragm Details	5.6-A27-4
Appendix 5.9-A1-1	WF74PTG Spliced Girders Details 1 of 5	5.9-A1-1

Appendix 5.9-A1-2	WF74PTG Spliced Girder Details 2 of 5	5.9-A1-2
Appendix 5.9-A1-3	Spliced Girder Details 3 of 5	5.9-A1-3
Appendix 5.9-A1-4	WF74PTG Girder Details 4 of 5	5.9-A1-4
Appendix 5.9-A1-5	Spliced Girder Details 5 of 5	5.9-A1-5
Appendix 5.9-A2-1	WF83PTG Spliced Girder Details 1 of 5	5.9-A2-1
Appendix 5.9-A2-2	WF83PTG Spliced Girder Details 2 of 5	5.9-A2-2
Appendix 5.9-A2-4	WF83PTG Spliced Girder Details 4 of 5	5.9-A2-3
Appendix 5.9-A3-1	WF95PTG Spliced Girder Details 1 of 5	5.9-A3-1
Appendix 5.9-A3-2	WF95PTG Spliced Girder Details 2 of 5	5.9-A3-2
Appendix 5.9-A3-4	WF95PTG Spliced Girder Details 4 of 5	5.9-A3-3
Appendix 5.9-A4-1	Tub Spliced Girder Miscellaneous Bearing Details	5.9-A4-1
Appendix 5.9-A4-2	Tub Spliced Girder Details 1 of 5	5.9-A4-2
Appendix 5.9-A4-3	Tub Spliced Girder Details 2 of 5	5.9-A4-3
Appendix 5.9-A4-4	Tub Spliced Girder Details 3 of 5	5.9-A4-4
Appendix 5.9-A4-5	Tub Spliced Girder Details 4 of 5	5.9-A4-5
Appendix 5.9-A4-6	Spliced Tub Girder Details 5 of 5	5.9-A4-6
Appendix 5.9-A4-7	Tub Sliced Girder End Diaphragm on Girder Details	5.9-A4-7
Appendix 5.9-A4-8	Tub Sliced Girder Raised Crossbeam Details	5.9-A4-8
Appendix 5.9-A5-1	Tub S-I-P Deck Panel Spliced Girder Details 1 of 5	5.9-A5-1
Appendix 5.9-A5-2	Tub S-I-P Deck Panel Spliced Girder – Details 2 of 5	5.9-A5-2
Appendix 5.9-A5-3	Tub S-I-P Deck Panel Spliced Girder – Details 3 of 5	5.9-A5-3
Appendix 5.9-A5-4	Tub S-I-P Deck Panel Spliced Girder – Details 4 of 5	5.9-A5-4
Appendix 5.9-A5-5	Tub S-I-P Deck Panel Spliced Girder – Details 5 of 5	5.9-A5-5
Appendix 5.9-A5-6	Tub S-I-P Deck Panel Girder – End Diaphragm on Girder Details	5.9-A5-6
Appendix 5.9-A5-7	Tub S-I-P Deck Panel Girder – Raised Crossbeam Details	5.9-A5-7

Appendix B

Appendix 5-B1	“A” Dimension for Precast Girder Bridges	5-B1-1
Appendix 5-B2	Pre-approved Post-Tensioning Anchorages	5-B2-1
Appendix 5-B3	Existing Bridge Widenings	5-B3-1
Appendix 5-B4	P.T. Box Girder Bridges Single Span	5-B4-1
Appendix 5-B5	Prestressed Girder Design Example	5-B5-1
Appendix 5-B6	Cast-in-Place Slab Design Example	5-B6-1
Appendix 5-B7	Precast Concrete Stay-In-Place (SIP) Deck Panel	5-B7-1
Appendix 5-B8	W35DG Deck Bulb Tee, 48" Wide	5-B8-1
Appendix 5-B9	Prestressed Voided Slab with Cast-in-Place Topping	5-B9-1
Appendix 5-B10	Positive EQ Reinforcement at Interior Pier of a Prestressed Girder	5-B10-1
Appendix 5-B11	LRFD Wingwall Design-Vehicle Collision	5-B11-1
Appendix 5-B12	Flexural Strength Calculations for Composite T-Beams	5-B12-1
Appendix 5-B13	Strut-and-Tie Model Design Example for Hammerhead Pier	5-B13-1
Appendix 5-B14	Shear and Torsion Capacity of a Reinforced Concrete Beam	5-B14-1
Appendix 5-B15	Sound Wall Design - Type D-2k	5-B15-

Chapter 5 Concrete Structures

5.0 General

The provisions in this section apply to the design of Cast-in-Place (CIP) and precast bridges constructed of normal density concrete and reinforced with mild reinforcing steel and/or prestressing strands or bars. The provisions are based on concrete ultimate compressive strengths of 10.0 ksi or less.

Prior to precast pretensioned and post-tensioned concrete members introduced in the early 1960s, all short and medium span bridges were built as cast-in-place reinforced concrete superstructures. Many of the bridges built before 1960 are still functional, durable, and structurally sound. The service life of some of these early bridges can be extended by widening their decks to accommodate increased traffic demand or to improve safety.

5.1 Material Properties

Design of concrete structures shall be based on the on the material properties cited herein and on the use of material properties that conform to the current AASHTO LRFD Bridge Design Specifications[1], AASHTO LRFD Bridge Construction Specifications[2], and the WSDOT Standard Specifications for Road, Bridge, and Municipal Construction[3].

5.1.1 Concrete Properties

A. Strength of Concrete

Pacific NW aggregates have consistently resulted in excellent concrete strengths, to as much as 10,000 psi in 28 days. The following strengths are normally used for design.

1. Cast-in-Place Concrete Bridges

   Since conditions for placing and curing concrete on cast-in-place bridges are not as controlled, as they are for precast bridge sections, a lower concrete strength is used. Class 4000 concrete is typically used for all cast-in-place concrete bridges. Where significant economy can be gained and structural requirements dictate, the structure could be designed for class 5000 concrete. Use of CLASS 5000 or higher requires approval of the Bridge Design Engineer, Bridge Construction Office, and Materials Lab.

2. Precast Girders

   Nominal 28-day concrete strength (f'_c) for precast girders with a cast-in-place deck is 7,000 psi. Where higher strengths would eliminate a line of girders, this strength can be specified, preferably at 8,500 psi up to a maximum of 10,000 psi. The final strength of concrete shall be specified as required by design and shown on the plans.

   The minimum concrete compressive strength at release (f'_{ci}) for each prestressed girder in a bridge is to be calculated and shown in the plans. For a 28-day concrete compressive strength of 7,000 psi, a concrete compressive strength at release of between 3,500 and 6,000 psi shall be specified. For high strength concrete, the compressive strength at release shall be limited to 7,500 psi. Release strengths of up to 8,500 psi can be achieved with extended curing for special circumstances. The specified concrete strength at release should be rounded to the next highest 100 psi.

B. Classes of Concrete

1. CLASS 3000

   Used in large sections with light to nominal reinforcement, mass pours, sidewalks, curbs, gutters, and nonstructural concrete guardrail anchors, luminaire bases.

2. CLASS 4000

   Used in cast-in-place post-tensioned or conventionally reinforced concrete box girders, slabs, traffic and pedestrian barriers, approach slabs, footings, box culverts, wing walls, curtain walls, retaining walls, columns, and crossbeams.

3. CLASS 4000D

   Concrete class 4000D shall be used for all cast-in-place bridge decks unless otherwise approved by the Bridge Design Engineer. WSDOT requires two coats of curing compound and a continuous wet curing for 14 days.

4. CLASS 4000P

   Used for cast-in-place pile and shaft.

5. CLASS 4000W

   Used underwater in seals.

6. CLASS 5000 or Higher. Used in cast-in-place post-tensioned concrete box girder construction or in other special structural applications situations if significant economy can be gained.

   The 28-day compressive design strengths (f'_c) are shown in Table 5.1.1-1.

Classes of Concrete	f'_c, (psi)
COMMERCIAL	2300
3000	3000
4000, 4000D	4000
4000W	2400*
5000	5000**
6000	6000
4000P	3400***

* 40 percent reduction from CLASS 4000.

** Class 5000 concrete is available within a 30-mile radius of Seattle, Spokane, and Vancouver. Outside this 30-mile radius, concrete suppliers do not have the quality control procedures and expertise to supply control Class 5000 concrete.

*** 15 percent reduction from CLASS 4000 for all drilled shafts.

28-day Compressive Design Strength
Table 5.1.1-1

C. Relative Compressive Concrete Strength

a. During design or construction of a bridge, it is necessary to determine the strength of concrete at various stages of construction. For instance, Section 6-02.3(17)J of the WSDOT Standards Specifications discusses the time at which falsework and forms can be removed to various percentages of the concrete design strength. Occasionally, construction problems will arise which require a knowledge of the relative strengths of concrete at various ages. Table 5.1.1-2 shows the approximate values of the minimum compressive strengths of different classes of concrete at various ages. If the concrete has been cured under continuous moist curing at an average temperature, it can be assumed that these values have been developed.

b. Curing of the concrete (especially in the first 24 hours) have a very important influence on the strength development of concrete at all ages. Temperature affects the rate at which the chemical reaction between cement and water takes place. Loss of moisture can seriously impair the concrete strength.

c. If test strength is above or below that shown in Table 5.1.1-2, the age at which the design strength will be reached can be determined by direct proportion.

For example, if the relative strength at 10 days is 64 percent instead of the minimum 70 percent shown in Table 5.1.1-2, the time it takes to reach the design strength can be determined as follows:

Let x = relative strength to determine the age at which the concrete will reach the design strength

$\frac{x}{70} = \frac{100}{64}$ Therefore, x = 110%

From Table 5.1.1-2, the design strength should be reached in 40 days.

Age	Relative Strength	Class 5000	Class 4000	Class 3000	Age	Relative Strength	Class 5000	Class 4000	Class 3000
Days	%	ksi	ksi	ksi	Days	%	ksi	ksi	ksi
3	35	1.75	1.40	1.05	20	91	4.55	3.64	2.73
4	43	2.15	1.72	1.29	21	93	4.65	3.72	2.79
5	50	2.50	2.00	1.50	22	94	4.70	3.76	2.82
6	55	2.75	2.20	1.65	23	95	4.75	3.80	2.85
7	59	2.95	2.36	1.77	24	96	4.80	3.84	2.88
8	63	3.15	2.52	1.89	25	97	4.85	3.88	2.91
9	67	3.35	2.68	2.01	26	98	4.90	3.92	2.94
10	70	3.5	2.80	2.10	27	99	4.95	3.96	2.97
11	73	3.65	2.92	2.19	28	100	5.00	4.00	3.00
12	75	3.75	3.00	2.25	30	102	5.10	4.08	3.06
13	77	3.85	3.08	2.31	40	110	5.50	4.40	3.30
14	79	3.95	3.16	2.37	50	115	5.75	4.60	3.45
15	81	4.05	3.24	2.43	60	120	6.00	4.80	3.60
16	83	4.15	3.32	2.49	70	125	6.25	5.00	3.75
17	85	4.25	3.34	2.55	80	129	6.45	5.16	3.87
18	87	4.35	3.48	2.61	90	131	6.55	5.24	3.93
19	89	4.45	3.56	2.67	100	133	6.70	5.40	4.00

Relative and Compressive Strength of Concrete

Table 5.1.1-2

D. Modulus of Elasticity

The modulus of elasticity for concrete strength up to 10 ksi is normally taken:

$$E = 33000 w^{3/2} \sqrt{f'_c} \quad (5.1.1\text{-}1)$$

where:

- w = Unit weight of concrete in kip/ft^3. (Normal unit weight concretes used in Washington is 0.160 kip/ft^3)
- f'$_c$ = Design compressive strength of concrete in ksi

E. Creep

The creep coefficient may be taken as follows:

$$\psi(t, t_i) = 1.9 k_{vs} k_{hc} k_f k_{td} k_i^{-0.118} \quad (5.1.1\text{-}2)$$

in which:

$$k_{vs} = 1.45 - 0.13(V/S) \geq 1.0 \quad (5.1.1\text{-}3)$$

$$k_{hc} = 1.56 - 0.008H \quad (5.1.1\text{-}4)$$

$$k_f = \left(\frac{5}{1 + f'_{ci}}\right) \quad (5.1.1\text{-}5)$$

$$k_{td} = \left(\frac{t}{61 - 4f'_{ci} + t}\right) \quad (5.1.1\text{-}6)$$

where:

- H = relativity humidity (%), equal to 75% for standard conditions
- k_{vs} = factor for the effect of the volume-to-surface ratio of the component
- k_{hc} = humidity factor for creep
- k_f = factor for the effect of concrete strength
- k_{td} = time development factor
- t = maturity of concrete (day), defined as age of concrete between time of loading for creep calculations, or end of curing for shrinkage calculations, and time being being considered for analysis or creep or shrinkage effect
- t_i = age of concrete when load is initially applied (day)
- V/S = volume-to-surface ratio (Table 5.6.1-1)
- f'$_{ci}$ = specified compressive strength of concrete at time of prestressing; if concrete age is unknown at design time, f'$_{ci}$ may be taken as 0.80 f'$_c$ (ksi)

In determining the maturity of concrete at initial loading, t_i, one day of accelerated curing by steam or radiant heat may be taken as equal to seven days of normal curing.

The final deflection is a combination of the elastic deflection and the creep effect associated with given loads shown by the equation below.

$$\Delta_{total} = \Delta_{elastic}\left[1 + \psi(t, t_i)\right] \quad (5.1.1\text{-}7)$$

Figure 5.1.1-1 provides creep coefficients for a range of typical initial concrete strength values, f'_{ci}, as a function of time from initial 7 day steam cure (ti = 7 days). The figure uses volume-to-surface, V/S, ratio of 3.3 as an average for W-type and tub girders and relativity humidity, H, equal to 75%.

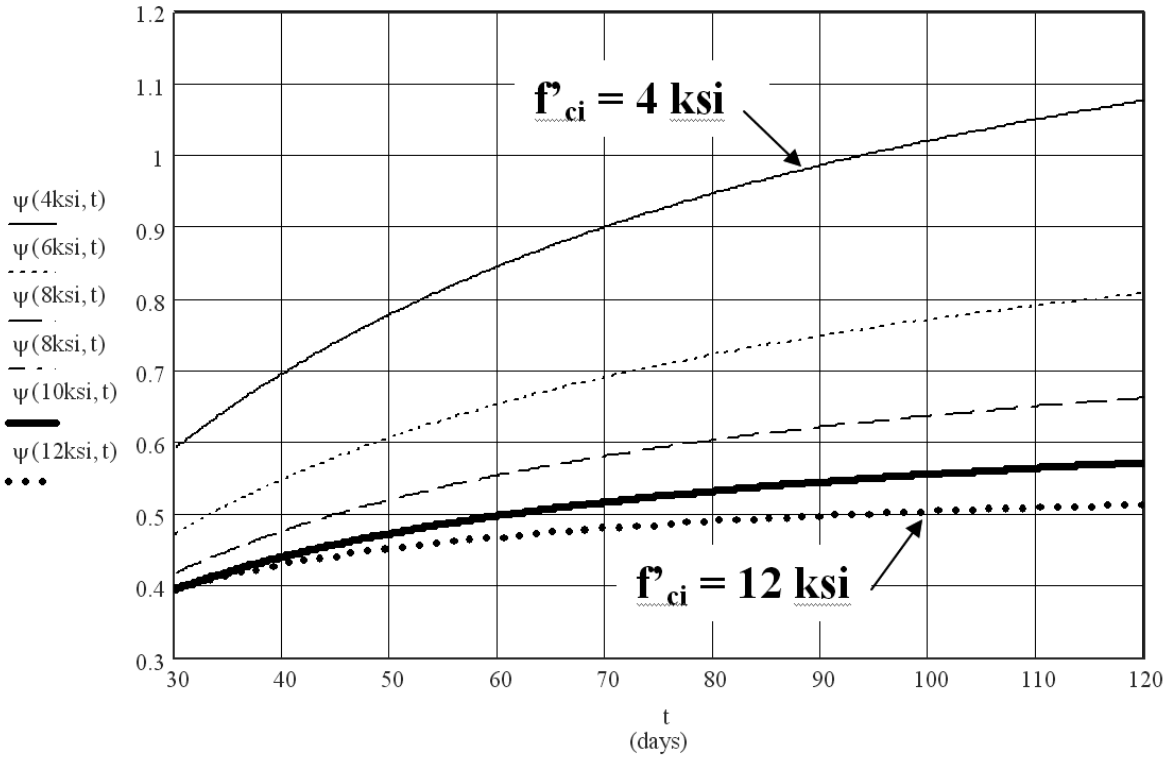

Creep Coefficient for Standard Conditions as function of Initial Concrete Strength
Figure 5.1.1-1

For other factors affecting creep, see AASHTO LRFD Specifications Section 5.4.2.3.2.

F. Shrinkage

To compute the variation of shrinkage with time, use the following equation.

$$\varepsilon_{SH} = -k_{vs} k_{hs} k_f k_{td} \, 0.48x10^{-3} \qquad (5.1.1\text{-}8)$$

in which:

$$k_{vs} = 2.00 - 0.14H \qquad (5.1.1\text{-}9)$$

All other factors are as defined above in Section E. Creep.

For concrete exposed to drying before five days of curing have elapsed, the shrinkage, eSH, should be increased by 20 percent.

For other factors affecting shrinkage, see AASHTO LRFD Specifications Section 5.4.2.3.3.

G. Grout

Grout is usually a prepackaged cement based grout or nonshrink grout that is mixed, placed, and cured as recommended by the manufacturer. It is used under steel base plates for both bridge bearings and luminaries or sign bridge bases. Should the grout pad thickness exceed 4", steel reinforcement shall be used. For design purposes, the strength of the grout, if properly cured, can be assumed to be equal to or greater than that of the adjacent concrete but not greater than 4000 psi. Nonshrink grout is used in keyways between precast prestressed deck slabs, tri-beams, double-Tees, and deck bulb-tees.

5.1.2 Reinforcing Steel

A. Grades

Steel reinforcing bars are manufactured as plain or deformed bars (which have ribbed projections that grip the concrete in order to provide better bond between steel and concrete). In Washington State, the reinforcing bars are always deformed.

Reinforcing bars conform to Section 9-07.2 of the *Standard Specifications*.

B. Sizes

Reinforcing bars are referred to in the contract plans and specifications by number and vary in size from #3 to #18. For bars up to and including #8, the number of the bar coincides with the bar diameter in eighths of an inch. The #9, #10, and #11 bars have diameters that provide areas equal to 1" x 1" square bars, 1⅛" x 1⅛" square bars and 1¼" x 1¼" square bars respectively. Similarly, the #14 and #18 bars correspond to 1½" x 1½" and 2" x 2" square bars, respectively. Appendix 5.1-A3, shows the sizes, number, and various properties of the types of bars used in Washington State.

C. Development

1. Tension Development Length

Development length or anchorage of reinforcement is required on both sides of a point of maximum stress at any section of a reinforced concrete member.

Development of bars in tension involves calculating the basic development length, l_d, which is modified by factors to reflect bar spacing, cover, enclosing transverse reinforcement, top bar effect, type of aggregate, epoxy coating, and ratio of required area to provided area of reinforcement to be developed.

The development length, l_d (including all applicable modification factors) must not be less than 12".

Appendix 5.1-A4, show the tension development length for both uncoated and epoxy coated Grade 60 bars for normal weight concrete with specified strengths of 3,000 to 6,000 psi.

2. Compression Development Length

The basic development lengths for deformed bars in compression are shown in Appendix 5.1-A5, Appendix A. These values may be modified for ratio of required area vs. provided area of reinforcement, or for bars enclosed in a ¼″ diameter spiral at 4″ maximum pitch. However, the minimum development length per WSDOT office practice is 1'-0".

3. Tension Development Length of Standard End Hook

Standard end hooks, utilizing 90° and 180° end hooks, are used to develop bars in tension where space limitations restrict the use of straight bars. Figure 5.1.2-1 and 5.1.2-2 and Table 5.1.2-1 show the minimum embedment lengths necessary to provide 2" of cover on the tails of 90° and 180° end hooks. Epoxy coating does not affect the tension development lengths, ldh, of standard 90° and 180° end hooks. Tension development Length of 90° & 180° Standard Hooks are shown in Appendix 5.1-A6.

Bar Size	Embedment
#3	6″
#4	7″
#5	9″
#6	10″
#7	1′−0″
#8	1′−2″
#9	1′−3″
#10	1′−5″
#11	1′−7″
#14	2′−10″
#18	3′−7″

Minimum Embedment Lengths of Standard 180° End Hooks
Table 5.1.2-1

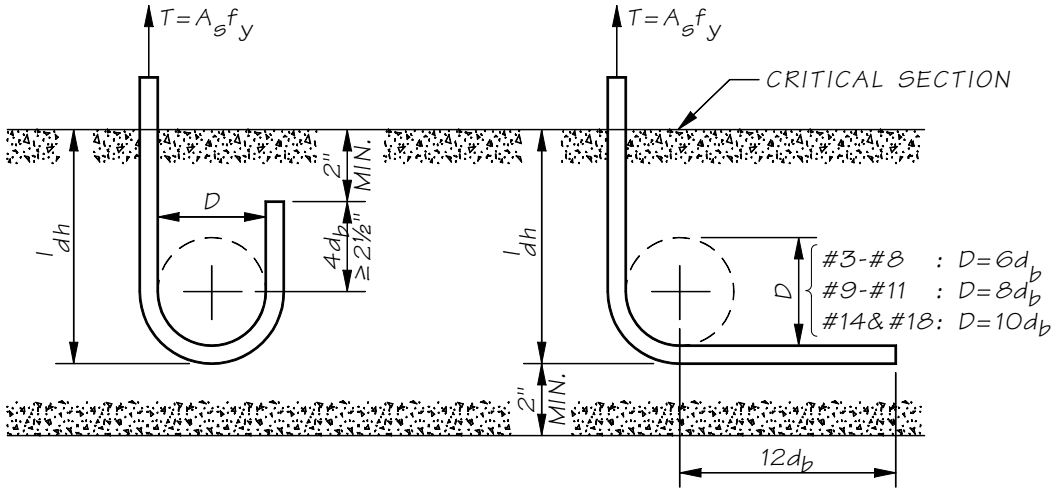

Standard 180° and 90° End Hooks
Figure 5.1.2-1

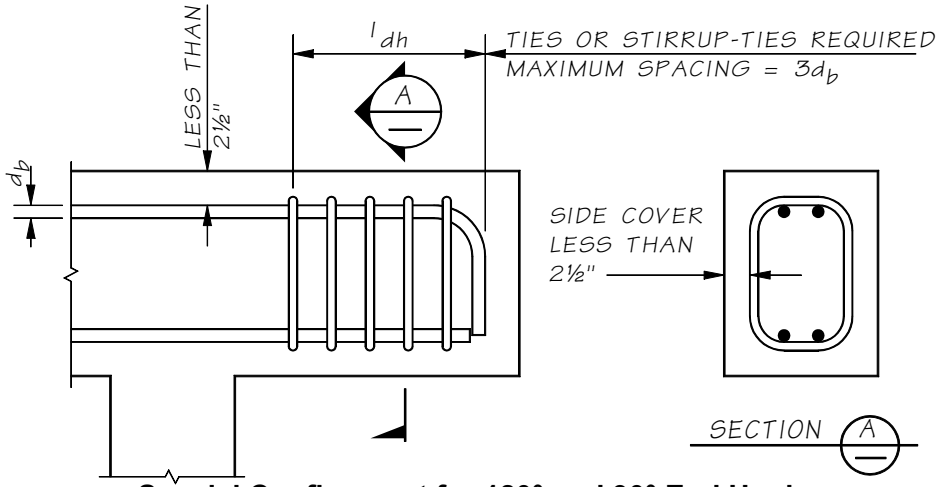

Special Confinement for 180° and 90° End Hooks
Figure 5.1.2-2

Cantilever Retaining Wall

The footing near the corner, at the junction between the stem and the footing, with reinforcing as shown will fully develop the resisting moment as long as the toe of the footing is long enough for anchorage, and stress at “A” (bottom) is not critical.

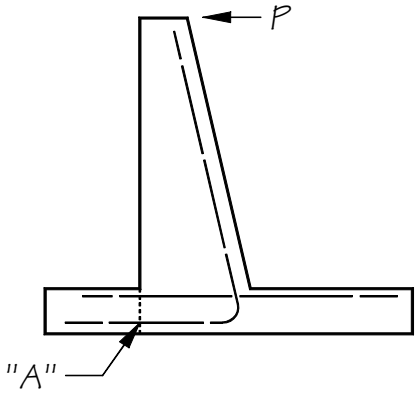

Cantilever Retaining Wall Reinforcing Details
Figure 5.1.2-3

T-Joint

The forces from a tension crack at 45° . Reinforcement as shown is more than twice as effective in developing the strength of the corner than if the reinforcement was turned 180°.

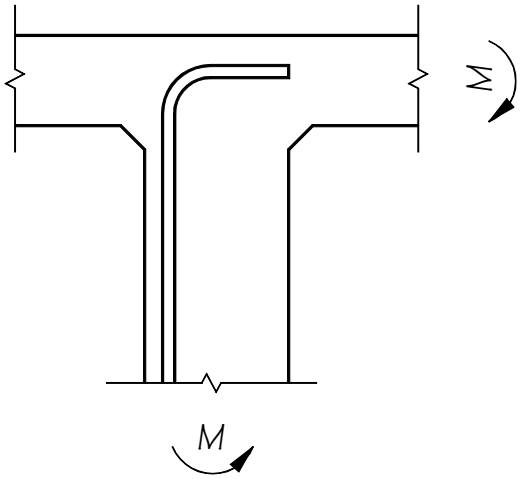

T-Joint Reinforcing Details
Figure 5.1.2-4

"Normal" Right Corners

Corners subjected to bending as shown will crack radially in the corner outside of the main reinforcing steel. Smaller size reinforcing steel shall be provided in the corner to distribute the radial cracking.

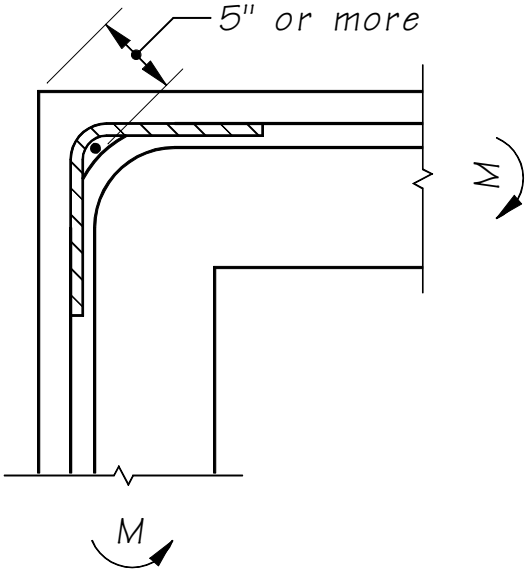

"Normal" Right Corner Reinforcing Details
Figure 5.1.2-5

Right or obtuse angle corners

Corners subjected to bending as shown in Figure 5.1.2-6 tend to crack at the reentrant corner and fail in tension across the corner. If not properly reinforced, the resisting corner moment may be less than the applied moment.

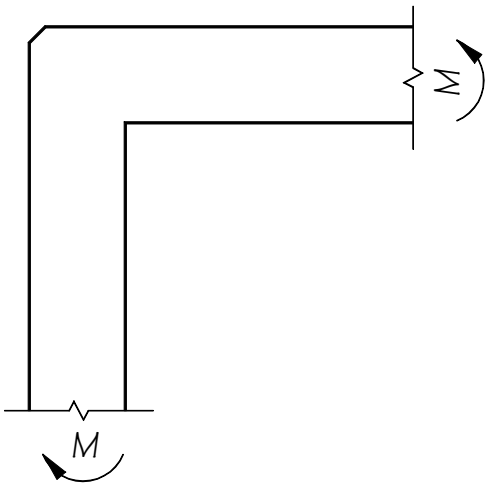

Right or Obtuse Angle Corner
Figure 5.1.2-6

Reinforced as shown in Figure 5.1.2-7, the section will develop 85% of the ultimate moment capacity of the wall. If the bends were rotated 180° , only 30% of the wall capacity would be developed.

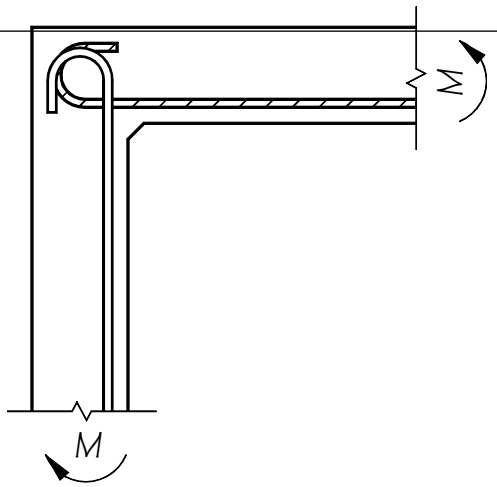

Right or Obtuse Angle Corner Reinforcing Details
Figure 5.1.2-7

Adding diagonal reinforcing steel across the corner as shown in Figure 5.1.2-8, approximately equal to 50% of the main reinforcing steel, will develop the corner strength to fully resist the applied moment. Extend the diagonal reinforcement past the corner each direction for anchorage. Since this bar arrangement will fully develop the resisting moment, a fillet in the corner is normally unnecessary.

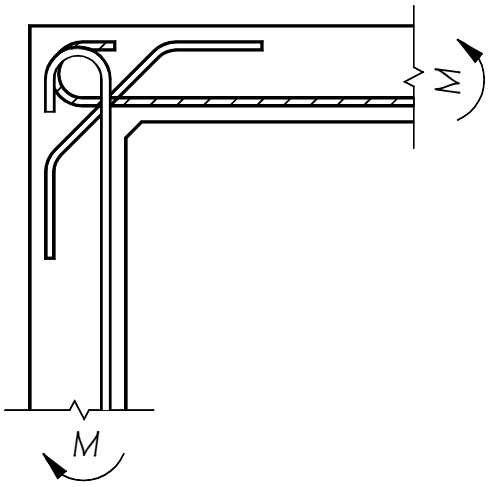

Right or Obtuse Angle Corner Reinforcing Details
Figure 5.1.2-8

D. Splices

Three methods are used to splice reinforcing bars; lap splices, mechanical splices, and welded splices. Lap splicing of reinforcing bars is the most common method. The Contract Plans should clearly show the locations and lengths of lap splice. Lap splices are not permitted for bars larger than #11.

No lap splices, for either tension or compression bars, shall be less than 2'-0" per WSDOT office practice. See Section 5.11.5 of the LRFD Specifications for additional splice requirements.

1. Tension Lap Splices

   Many of the same factors which affect development length affect splices. Consequently, tension lap splices are a function of the bar's development length, l_d. There are three classes of tension lap splices: Class A, B, and C. Designers are encouraged to splice bars at points of minimum stress and to stagger lap splices along the length of the bars.

   Appendix 5.1-A7, shows tension lap splices for both uncoated and epoxy coated Grade 60 bars for normal weight concrete with specified strengths of 3,000 to 6,000 psi. For additional requirements, see AASHTO LRFD Specifications Section 5.11.5.

   For Seismic Performance Categories C and D, AASHTO LRFD Specifications Section 5.10.11.4.1, the lap splices for longitudinal column bars are permitted only within the center half of the column height and shall not be less than the lap splices given in Appendix 5.1-A7, or 60 bar diameters, whichever is greater.

   Note that the maximum spacing of the transverse reinforcement (i.e., column ties) over the length of the splice shall not exceed the smaller of 6" or ¼ of the minimum column plan dimension.

2. Compression Lap Splices

   The compression lap splices shown in Appendix 5.1-A5, are for concrete strengths greater than 3,000 psi. If the concrete strength is less than 3,000 psi, the compression lap splices should be increased by one third. Note that when two bars of different diameters are lap spliced, the length of the lap splice shall be the larger of the lap splice for the smaller bar or the development length of the larger bar.

3. Mechanical Splices

   A second method of splicing is by mechanical splices, which are proprietary splicing mechanisms. The requirements for mechanical splices are found in AASHTO LRFD Specifications Sections 5.5.3.4 and 5.11.5.2.2.

4. Welded Splices

   Welding of reinforcing bars is the third acceptable method of splicing reinforcing bars. AASHTO LRFD Specifications Section 5.11.5.2.3 describes the requirements for welding reinforcing steel. On modifications to existing structures, welding of reinforcing bars may not be possible because of the non-weldability of some steels.

E. Bends

Standard hooks and bend radii for grade 60 reinforcing bars are shown in Appendix 5.1-A1. Note that the tail lengths are greater for the 135° seismic tie hook than for the regular or nonseismic 135° tie hook. For field bending requirements, see AASHTO LRFD Specifications Section 5.11.2.4.

F. Fabrication Lengths

Because of placement considerations, the overall lengths of bar size #3 has been limited to 30 feet and bar sizes #4 and #5 to 40 feet. To use longer lengths, the designer should make sure that the bars can be placed and transported by truck. The maximum overall bar lengths shall be specified as shown in Table 5.1.2-2.

Bar Size	Maximum Length
#3	30'-0"
#4, #5	40'-0"
#6, #7	60'-0"
#8, #9, #10	60'-0"
#11, #14, #18	60'-0"

Maximum Bar Lengths
Table 5.1.2-2

G. Placement

Placement of reinforcing bars can be a problem during construction. Reinforcing bars are more than just lines on the drawing, they have size, weight, and volume. In confined areas, the designer should ensure that reinforcing bars can be placed. Sometimes it may be necessary to make a large scale drawing of reinforcement to look for interference and placement problems. If interference is expected, additional details may be required in the contract plans showing how to handle the interference and placement problems. Figure 5.1-A2 of Appendix A shows the minimum clearance and spacing of reinforcement for beams and columns.

H. Percentage Requirements

There are several AASHTO LRFD requirements to ensure that minimum reinforcement is provided in reinforced concrete members.

1. Flexure

The reinforcement provided at any section should be adequate to develop a moment at least 1.2 times the cracking moment calculated on the basis of the modulus of rupture for normal weight concrete. The modulus of rupture for normal weight concrete is $7.5\sqrt{f'c}$. This requirement may be waived if the area of reinforcement provided is at least one-third greater than that required by analysis. For additional minimum reinforcement required, see AASHTO LRFD Specifications Section 5.7.3.3.2.

2. Compression

For columns, the area of longitudinal reinforcement shall not exceed 0.08 nor be less than 0.01 of the gross area, Ag, of the section. Preferably, the ratio of longitudinal reinforcement should not exceed 0.04 of the gross area, Ag, to ensure constructability and placement of concrete. If a ratio greater than 0.04 is used, the designer should verify that concrete can be placed. If for architectural purposes the cross section is larger than that required by the loading, a reduced effective area may be used. The reduced effective area shall not be less than that which would require 1% of the longitudinal area to carry the loading. Additional lateral reinforcement requirements are given in Section 5.7.4.3 of AASHTO LRFD Specifications, and for plastic hinge zones, see AASHTO LRFD Specifications Section 5.10.11.4.1. For column reinforcing, ASTM A 706 reinforcing may be specified upon Bridge Engineer's approval to improve ductility.

3. Other Minimum Reinforcement Requirements

For minimum shear reinforcement requirements, see AASHTO LRFD Specifications Section 5.8.2.5 and for minimum temperature and shrinkage reinforcement, see AASHTO LRFD Specifications Section 5.10.8.

5.1.3 Prestressing Steel

A. General

Three types of high-tensile steel used for prestressing steel are:

1. Strands: AASHTO M 203 Grade 270, low relaxation or stress relieved.
2. Bars: AASHTO M 275 Type II
3. Parallel wires: AASHTO M 204 Type WA

All WSDOT designs are based on low relaxation strands using either 0.5" or 0.6" diameter strands for girders, and ⅜" or 7/16" for stay-in-place precast deck panels. Properties of uncoated and epoxy coated prestressing stands are shown in Appendix 5.1-A8.

B. Allowable Stresses

Allowable stresses for prestressing steel are as listed in AASHTO LRFD specifications Section 5.9.3-1.

C. Prestressing Strands

Standard strand pattern for all types of WSDOT prestressed girders are shown throughout the Appendix 5.6 and Appendix 5.9.

1. Straight Strands

   The position of the straight strands in the bottom flange and temporary strands for shipping and handling in top flange has been standardized for each size of flange. Those strand positions and the girder flange sizes are summarized in Appendix 5.6-A and 5.9A.

2. Harped Strands

   The harped strands are bundled at the 0.4 and 0.6 points of the girder length or at the 0.33 and 0.67 points of the girder length depending on the girder type. The harped strands are bundled at the harping points. Bundles are limited to 12 strands each. Twelve (12) and fewer harped strands are placed in a single bundle with the centroid normally 3" above the bottom of the girder. Strands in excess of 12 are bundled in a second bundle with the centroid 6" above the bottom of the girder. At the girder ends, the strands are splayed to a normal pattern. The centroid of strands at both the girder end and the harping point may be varied to suit girder stress requirements.

   Temporary strands in the top flange of the girder may be required for shipping (see section on girder shipping). These strands may be pretensioned and bonded only for the end 10 feet of the girder, or may be post-tensioned prior to lifting the girder from the form. These strands shall be considered in the design to reduce the required transfer strength, to provide stability during shipping, and to reduce the “A” dimension. These strands must be cut before the cast-in-place intermediate diaphragms are placed.

   The slope of the harped strands shall not be steeper than 8 horizontal to 1 vertical for W83G and W95G, and 6 horizontal to 1 vertical for all other prestressed girders.

   The harped strand exit location at the girder ends shall be held as low as possible while maintaining the concrete stresses within allowable limits.

D. Development of Prestressing Strand

1. General

In determining the resistance of pretensioned concrete components in their end zones, the gradual buildup of the strand force in the transfer and development lengths shall be taken into account.

The prestress force may be assumed to vary linearly from 0.0 at the point where bonding commences to a maximum at the transfer length.

Between the transfer length and the development length, the strand force may be assumed to increase in a parabolic manner, reaching the tensile strength of the strand at the end of development length.

For the purpose of this article, the transfer length may be taken as 60 strand diameters and the development length shall be taken as specified in AASHTO LRFD Section 5.11.4.2.

The effects of debonding shall be considered as specified in AASHTO LRFD Section 5.1.3D-4.

2. Bonded Strand

Pretensioning strand shall be bonded beyond the critical section for development length, in inches, taken as:

$$l_d \geq k\left(f_{ps} - \frac{2}{3} f_{pe}\right) d_b \qquad (5.1.3\text{-}1)$$

where:

d_b = Nominal strand diameter (in)
f_{pe} = Effective stress in prestressing steel after all losses (ksi)
f_{ps} = Stress in prestressing steel at nominal strength (ksi)
k = 1.6 prestressed girders
k = 1.0 for precast slabs and deck panels

The development length of uncoated & coated prestressing strands are shown in Appendix 5.1-A8.

3. Partially Debonded Strands

Where it is necessary to prevent a strand from actively supplying prestress force near the end of a girder, it may be debonded. This can be accomplished by taping a close fitting pvc tube to the stressed strand from the end of the girder to some point where the strand can be allowed to develop its load. Since this is not a common procedure, it should be carefully detailed on the plans. It is important when this method is used in construction that the taping of the tube be done in such a manner that concrete cannot leak into the tube and provide an undesirable bond of the strand.

The number of partially debonded strands should not exceed 25 percent of the total number of strands, and the number of debonded strands in any horizontal row shall not exceed 40 percent of the strands in that row.

Debonded strands shall be symmetrically distributed about the centerline of the member. Debonded lengths of pairs of strands that are symmetrically positioned about the centerline of the member shall be equal.

Exterior strands in each horizontal row shall be fully bonded.

Where a portion or portions of a pretensioning strand are not bonded and where tension exists in the precompressed tensile zone, the development length specified in AASHTO LRFD section 5.11.4.2 shall be doubled.

4. Strand Development Outside of Girder

For girders made continuous for live load, extended bottom prestress strands are used to carry positive live load, creep, and other moments from one span to another. WSDOT standard drawings for prestressed girders provide guidance to calculate required number of extended strands. Strands used for this purpose must be developed in the short distance between the two girder ends. This is normally accomplished by requiring strand chucks and anchors as shown in Figure 5.1.3-1. The nominal development length is normally 1'-9". At back walls which are connected to the superstructure, the extended strands may be used to withstand earthquake forces and, in this case, should be developed accordingly. The number of strands to be extended cannot exceed the number of straight strands available in the girder.

Designer shall calculate the exact number of extended straight strands needed to develop the required moment capacity at the end of the girder. This calculation shall be based on the tensile strength of the strands, the stress imposed to the anchor, and concrete bearing against the projected area of the anchor. The total number of extended strands at each end of girder shall not be less than four or as specified herein.

$$N_{PS} = 12\left[(M_c + V_c h)\times\frac{N_c}{N_g}\times K - M_{SIDL}\right]\times\frac{1}{0.9A_{ps}F_{ps}d} \qquad (5.1.3\text{-}2)$$

Where:

M_c, V_c = the lesser of elastic or plastic hinging moment & shear of column respectively, ft-kips, kips
h = distance from top of column to c.g. of superstructure, ft
N_c = number of columns
N_g = number of girders
A_{ps} = area of each extended strand, in^2
f_{ps} = average stress in prestressing steel, ksi
d = distance from top of slab to c.g. of extended strands, in
M_{SIDL} = moment due to SIDL (Traffic barrier, sidewalk, etc.), ft-kips.
K = maximum of K_1 or K_2

$$K_1 = \frac{L_2}{L_1 + L_2}$$

$$K2 = \frac{L_1}{L_1 + L_2}$$

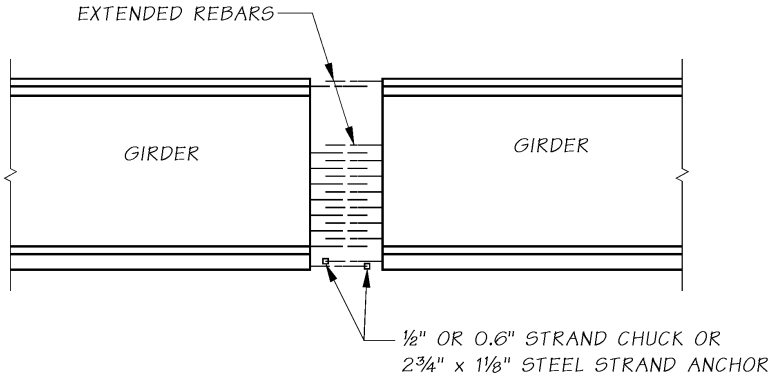

Strand Development
Figure 5.1.3-1

5. Stress variation at free end of strand

   Pretensioning strand shall be bonded beyond the section required to develop f_{ps} for a development length, 1_d. The stress in the pretensioning strand varies linearly from 0.0 at the point where bonding commences to the effective stress after losses, f_{pe}, at the end of the transfer length. Between the end of the transfer length and development length, the strand stress grows from the effective stress in the prestressing steel after losses to the stress in the strand at nominal resistance of the member. Between the end of the transfer length and the development length, the strand stress may be assumed to increase linearly, reaching the stress at nominal resistance, f_{ps}, at the development length.

   The correlation between strand stress and the distance over which the strand is bonded to the concrete can be idealized by the relationship shown in Figure 5.1.3-2. This idealized variation of strand stress may be used for analyzing sections within the transfer and development length at the end of pretensioned members. In calculating the tensile stress in the longitudinal reinforcement, a variation of design stress with the distance from the free end of strand as specified in Figure 5.1.3-2 may be assumed.

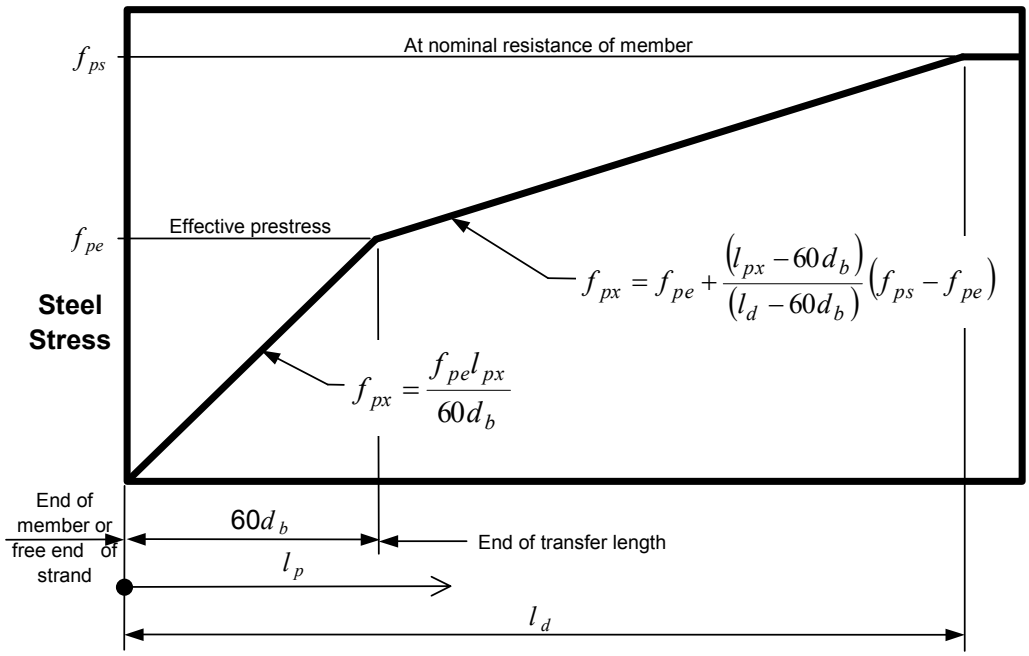

Idealized relationship between steel stress and distance from the free end of strand.
Figure 5.1.3-2

5.1.4 Prestress Losses

AASHTO LRFD Specifications outline the method of predicting prestress losses for usual prestressed concrete bridges which may be used in design except as noted below.

The following sources of prestress loss can influence the effective stress in the strand.

A. Instantaneous Losses

1. Elastic shortening of concrete.

   Transfer of prestress forces into the girder ends results in an instantaneous elastic loss. Prestress losses due to elastic shortening shall be added to the time dependent losses to determine the total losses. The loss due to elastic shortening in pretensioned members shall be taken as:

$$PL_{ES} = \frac{E_p}{E_{ci}} f_{cgp} \qquad (5.1.4\text{-}1)$$

   The loss due to elastic shortening in cast-in-place post-tensioned members and precast spliced-girders shall be taken as:

$$PL_{ES} = \frac{N-1}{N} . \frac{E_p}{E_{ci}} f_{cgp} \qquad (5.1.4\text{-}2)$$

   where:

   E_p = Modulus of elasticity of prestressing steel, ksi
   E_{ci} = Modulus of elasticity of concrete at transfer, ksi
   N = Number of identical prestressing tendons
   f_{cgp} = Sum of concrete stresses at the center of gravity of prestressing tendons due to the prestressing force at transfer (after jacking for post-tensioned members) and the self-weight of the member at the section of maximum moment, ksi

$$f_{cgp} = \frac{P}{A_g} + \frac{Pe^2}{I_g} + \frac{M_g e}{I_g} \qquad (5.1.4\text{-}3)$$

   For pretensioned member and low-relaxation strands, f_{cgp} may be calculated based on $0.7f_{pu}$. For post-tensioned members with bonded tendons, f_{cgp} may be calculated based on prestressing force after jacking at the section of maximum moment.

   For final conditions, the designer shall assume the prestress acting on the section to be NA_S (0.70 f_{pu}-PL) for stress relieved strands and NA_s (0.75 f_{pu}-PL) for low relaxation strands.

   Where:

   N = number of stressed strands passing through the section
   A_s = area of one strand, in2
   f_{pu} = ultimate strength in ksi
   PL = total prestress losses in ksi in pretensioned members.

2. Anchorage Set Loss

   The anchor set loss shall be based on ⅜" slippage for design purposes. Anchor set loss and the length affected by anchor set loss is shown in Figure 5.1.4-1.

$$x = \sqrt{\frac{\Delta_{set} A_{PT} E_p L}{P_{j\ -Left} - P_{j\ -Right}}} \tag{5.1.4-4}$$

$$\Delta f_{pA} = \frac{2x(P_{j\ -Left} - P_{j\ -Right})}{A_{PT} L} \tag{5.1.4-5}$$

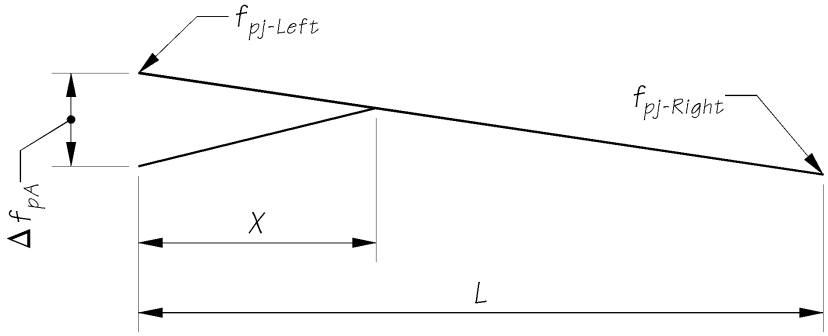

Anchor set loss
Figure 5.1.4-1

3. Friction losses.

   Friction losses occurring during jacking and prior to anchoring depend on the system and materials used. For purposes of design, this office has specified a rigid spiral galvanized ferrous metal duct system for which μ shall be 0.20 and K = 0.0002. This system is at present available from several large suppliers. To avoid the substantial friction loss caused by sharp tendon curvature in the end regions where the tendons flare out from a stacked arrangement towards the bearing plates, use 0.10 times the span length or 20 feet as the minimum flare zone length. The recommended minimum radius (horizontal or vertical) of flared tendons is 200 feet. In the special cases where sharp curvature cannot be avoided, extra horizontal and vertical ties should be added along the concave side of the curve to resist the tendency to break through the web.

$$\Delta f_{pF} = f_{pj}\,(1 - e^{-(kx+\mu\alpha)}) \tag{5.1.4-6}$$

   Where:

$$\alpha = \sqrt{(\alpha_H)^2 + (\alpha_V)^2}$$

$$\alpha_V = \frac{2\delta}{L}$$

$$\alpha_H = \frac{S}{R}$$

When summing the α angles for total friction loss along the structure, horizontal curvature of the tendons as well as horizontal and vertical roadway curvature should be included in the summation. Losses due to shrinkage, elastic shortening, creep, and relaxation of steel shall be as indicated in Subsection 5.2.4. The α angles for horizontally and vertically curved tendons are shown in Figure 5.1.4-2.

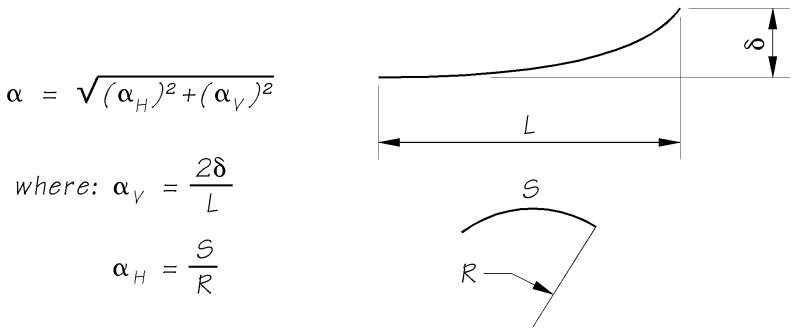

The α angles for Curved PT Tendons
Figure 5.1.4-2

B. Approximate Lump Sum Estimate of Time-dependent Losses

Time-depended losses include:

1. Creep of concrete.
2. Shrinkage of concrete.
3. Steel relaxation.

For normal design in lieu of more accurate methods, time dependent losses may be taken as shown in Table 5.1.4-3.

Type of Section	Low-relaxation Strands	Bars
Rectangular Beam	33 ksi	25 ksi
Post-tensioned Box Girder	25 ksi	15 ksi
Deck bulb Tee, Double Tee, Tri beam, Solid and Voided Slabs	$37\left[1-\frac{0.15(f'c-6)}{6}\right]$	$31\left[1-\frac{0.15(f'c-6)}{6}\right]$

Time Dependent Prestress Losses
Table 5.1.4-3

For standard precast, pretensioned members with cast-in-place slab subject to normal loading and environmental conditions and pretensioned with low relaxation strands, the long-term prestress loss, Δf_{pLT}, due to creep of concrete, shrinkage of concrete, and relaxation of steel may be estimated using the following formula:

$$\Delta f_{pLT} = 10.0\frac{f_{pi}A_{ps}}{A_g}\gamma_h\gamma_{st} + 12.0\gamma_h\gamma_{st} + 2.5 \qquad (5.1.4.8)$$

for which:

$$\gamma_h = 1.7 - 0.01H$$

$$\gamma_{st} = \frac{5}{(1 + f'_{ci})}$$

where:

f_{pi} = prestressing steel stress just before transfer to the concrete member (ksi)
A_{ps} = area of prestressing steel (in^2)
A_g = gross area of concrete member (in^2)
γ_h = correction factor for relative humidity of the ambient air
γ_{st} = correction factor for specified concrete strength at time of prestress transfer to the concrete member

For members of unusual dimensions, level of prestressing, construction schedule, or concrete constituent materials and for post-tensioned members, the Refined Method of AASHTO LRFD Specifications Section 5.9.5.4 or computer time-step methods should be used.

Equation 5.1.4.8 does not include any elastic shortening loss at time of prestress transfer or elastic elongation gain due to application of deck weight, superimposed dead loads, or live loads.

C. Time-Dependent Losses

For standard precast, pretensioned members with cast-in-place slab subject to normal loading and environmental conditions and pretensioned with low relaxation strands, the total prestress loss may be estimated as

$$\Delta f_{pT} = \Delta f_{pRO} + \Delta f_{pES} + \Delta f_{pED} + \Delta f_{pLT} \qquad (5.1.4.9)$$

The first term relates to initial relaxation that occurs between the time of strand stressing and prestress transfer.

$$\Delta f_{pRO} = \frac{\log(24t)}{40}\left(\frac{f_{pj}}{f_{py}} - 0.55\right)f_{pj} \qquad (5.1.4.10)$$

where:

t = duration of time between strand stressing and prestress transfer, typically 1 day.
f_{pj} = jacking stress
f_{py} = yield strength of the strand

The second tern, Δf_{pES}, accounts for elastic shortening and is accordance with AASHTO LRFD 5.9.5.2.3a.

The elatic gain due to deck placement and superimposed dead loads is taken to be

$$\Delta f_{pED} = \frac{E_p}{E_c}\left[-\frac{(M_{slab}+M_{diaphragms})e_{ps}}{I_g}-\frac{M_{sidl}\left(Y_{bc}-Y_{bg}+e_{ps}\right)}{I_c}\right] \quad (5.1.4.11)$$

where:

E_p = modulus of elasticity of the prestressing strand
E_c = modulus of elasticity of the concrete at the time of loading
M_{slab} = moment caused by slab placement
$M_{diaphragms}$ = moment caused by diaphragms and other external loads applied to the non-composite girder section
M_{sidl} = moment caused by all superimposed dead loads including traffic barriers and overlays
e_{ps} = eccentricity of the prestressing strand
I_g = moment of inertia of the non-composite girder
I_c = moment of inertia of the composite girder
Y_{bg} = location of the centroid of the non-composite girder measured from the bottom of the girder
Y_{bc} = location of the centroid of the composite girder measured from the bottom of the girder

Long term time dependent losses, Δf_{pLT}, are computed in accordance with AASHTO LRFD 5.9.5.4 Refined Method or a detailed time-step method. The approximate method given in LRFD 5.9.5.3 may be used for preliminary design.

D. Temporary Losses

For checking stresses during release, lifting, transportation, and erection of prestressed girders, the elastic and time-dependent losses may be computed based on the following assumptions.

1. Lifting of girders from casting beds

   For normal construction, forms are stripped and girders are lifted from the casting bed within one day.

2. Transportation

   Girders are most difficult to transport at a young age. The hauling configuration causes reduced dead load moments in the girder and the potential for overstress between the harping points. Overstress may also occur at the support points depending on the prestressing and the trucking configuration. This is compounded by the magnitude of the prestress force not having been reduced by losses. For an aggressive construction schedule girders are typically transported to the job site around day 10.

   When losses are estimated by LRFD 5.9.5.3, Approximate Method, the losses at the time of hauling may be estimated by

   $$\Delta f_{pTH} = \Delta f_{pRO} + \Delta f_{pES} + \Delta f_{pH} \quad (5.1.4.12)$$

   where:

   Δf_{pTH} = total loss at hauling

   Δf_{pH} = time dependent loss at time of hauling $= 3\frac{f_{pi}A_{ps}}{A_g}\gamma_h\gamma_{st} + 3\gamma_h\gamma_{st} + 0.6$

3. Erection

   During construction the non-composite girders must carry the full weight of the cast slab and interior diaphragms. This loading typically occurs around 120 days for a normal construction schedule.

4. Final Configuration

   The composite slab and girder section must carry all conceivable loads including superimposed dead loads such as traffic barriers, overlays, and live loads. It is assumed that superimposed dead loads are placed at 120 days and final losses occur at 2000 days.

5.1.5 Prestressing Anchorage Systems

There are numerous prestressing systems. Most systems combine a method of stressing the prestressing strands with a method of anchoring it to concrete.

WSDOT requires approval of all multi-strand and/or bar anchorages used in prestressed concrete bridges by testing or by a certified report, stating that the anchorage assembly will develop the yield strength of post-tensioning steel. WSDOT approved anchorages are listed in Appendix 5-B2.

5.1.6 Ducts

Ducts for longitudinal post-tensioning tendons shall be round and made of rigid galvanized ferrous metal, except for transverse post-tensioning in deck slab where rectangular or oval shape polyethylene ducts may be used. Ducts for transverse post-tensioning of bridge deck slabs may be rectangular.

A. Ducts for Internal Post-tensioning

   For longitudinal tendons, prestressing stands shall be encased in a galvanized, ferrous metal duct that is rigid and spiral. For transverse tendons in deck slab, prestressing strands shall be encased a rigid plastic duct. Post-tensioning ducts shall maintain the required profile within a placement tolerance of plus or minus ¼″ for longitudinal tendons and plus or minus ⅛" for transverse slab tendons during construction.

   Vents at high points and drains at low points of the tendon profile shall be specified. Vents and drains shall be ½″ minimum diameter standard steel or polyethylene pipe. Vents are not required for transverse post-tensioning ducts in the roadway slab unless specified in the Plans.

   Strand tendon duct shall have an inside cross-sectional area large enough to accomplish strand installation and grouting. The area of the duct shall be at least 2.5 times the net area of prestressing steel in the duct. The maximum duct diameter shall be 4½".

   The inside diameter of bar tendon duct shall at least be ¼" larger than the bar diameter. At coupler locations the duct diameter shall at least be ¼" larger than the coupler diameter.

   Ducts installed and cast into concrete prior to prestressing steel installation, shall be capable of withstanding at least 10 feet of concrete fluid pressure.

   Ducts shall have adequate longitudinal bending stiffness for smooth, wobble free placement. When the duct must be bent in a tight radius, more flexible duct may be used, subject to the Bridge Design Engineer's approval. The radius of curvature of tendon ducts shall not be less than 20 ft except in anchorage areas where 12 ft may be permitted.

B. Ducts for External Post-tensioning

Duct shall be high-density polyethylene (HDPE) conforming to ASTM D 3350, including the property values specified in Table X1 for pipe materials PE 3406 and PE 3408.

Duct for external tendons, including their splices, shall be water tight, seamless or welded, and be capable of resisting at least 150-psi grout pressure.

Transition couplers between ducts shall conform to either the standard pressure ratings of ASTM D 3505 or the hydrostatic design stresses of ASTM F 714 at 73F. The inside diameter through the coupled length shall not be less than that produced by the dimensional tolerances specified in ASTM D 3505.

Workers performing HDPE pipe welding shall have satisfactorily completed a certified HDPE pipe welding course and shall have a minimum of five years experience in welding HDPE pipe.

C. Transitions

Transitions between ducts and wedge plates shall have adequate length to reduce the angle change effect on the performance of strand-wedge connection, friction loss at the anchorage, and fatigue strength of the post-tensioning reinforcement.

5.2 Design Consideration

5.2.1 Design Limit States

Concrete bridge components shall be designed to satisfy the requirements of service, strength, and extreme-event limit states for load combinations specified in AASHTO LRFD Specifications Table 3.4.1-1.

A. Service Limit State

Concrete stresses, deformations, and cracking , distribution of reinforcement, deflection and camber shall be investigated at service limit state.

B. Strength Limit State

Axial, Flexural, Shear strength and stability of concrete components shall be investigated at strength limit state. Resistance factors shall be based on AASHTO LRFD Specifications Section 5.5.4.2.

C. Extreme Event Limit State

Concrete Bridge components, and connections shall resist extreme event loads due to earthquakes and collision forces.

D. Fatigue Limit State

Fatigue of the reinforcement need not be checked for fully prestressed concrete satisfying requirements of service limit state. Fatigue need not be investigated for concrete deck slab on multi-girder bridges. For fatigue requirements, refer to AASHTO LRFD Specifications Section 5.5.3.

5.2.2 Design Criteria

AASHTO LRFD Specifications shall be used to design concrete bridges, except as modified in this section. Prestressed concrete bridges shall be designed for allowable stresses and checked for ultimate load capacity.

A. Design Assumptions and Requirements

The WSDOT design criteria for prestressed girders is given in Table 5.2.2-1. These design assumptions and requirements apply to pretensioned girders only. Deck thickness of 7½″ minimum including ½" wearing surface is to be assumed unless a thinner deck can be justified by analysis or by the space necessary to place the deck reinforcement with the required clearances and cover.

Bridge end skew angle is often controlled by the roadway geometry. For common practices this skew angle shall be limited to 45 degrees for all prestressed girders. Skew angle for precast slab and trapezoidal tubs shall be limited to 30 degrees. Deviation from these limits needs Bridge Engineers approval.

For "Bridges Composed of Simple Span Precast Girders Made Continuous" per LRFD Article 5.14.1.4. WSDOT will continue to design these types of bridges as simple span for all transient and permanent loads for both simple and continuous spans. Continuity reinforcement is provided at intermediate piers for negative transient loads and permanent loads applied after completion of bridge deck construction.

Design Specifications	AASHTO LRFD Specifications and WSDOT Bridge Design Manual
Design Method	Prestressed members are designed for service limit state for allowable stresses and checked for strength limit state for ultimate capacity. All other members shall be designed in accordance with the requirements of strength limit state.
Design Assumption	Prestressed girders are designed as simple span for all transient and permanent loads for both simple and continuous spans. Continuity reinforcement are provided at intermediate piers for negative transient loads and super imposed dead loads.
Load and Load factors	Service, Strength, and Extreme Event Limit State load and load combinations per LRFD Specifications
Allowable Stresses	BDM Table 5.2.3-1
Prestress Losses	BDM Article 5.1.4 and Table 5.1.4-1
Shear Design	AASHTO LRFD article 5.8 and BDM 5.2.4C
Shipping and Handling	BDM Article 5.6.3C
Continuous Structures	Girder types and spacing shall be identical in adjacent spans. Girder types and spacing may be changed at expansion joints at intermediate piers.
Intermediate Diaphragms	Intermediate diaphragm shall be provided for all prestressed girder bridges as shown below: • ¼ points of span for span lengths over 120'-0". • ⅓ points of span for span lengths 80'-0" to 120'-0". • mid points of span for span lengths 40'-0" to 80'-0". • no diaphragm requirement for span length less than 40'-0".

Design Criteria for prestressed Girders
Table 5.2.2-1

5.2.3 Service Limit State

A. General

Service limit state is used to satisfy allowable stresses, deflection, and cracking requirements. Design aid for tensile stress, f_S, and cracking moment, M_{cr}, which are used to check crack control and minimum flexural reinforcement respectively are provided in Appendices 5.2-A1, 5.2-A2, and 5.2-A3.

B. Allowable Stresses

WSDOT requires that under service limit state the tensile stresses in the precompressed tensile zone shall be limited to zero. This prevents cracking of the concrete during service life of the structure and provides additional stress and strength capacity for overloads. Allowable concrete stresses are shown in Table 5.2.3-1.

Condition	Stress	Location	Allowable Stress
Temporary Stress at Transfer and at Lifting from Casting Bed	Tensile	In areas other than precompressed tensile zone and without bonded reinforcement	$0.0948\sqrt{f'_{ci}}\,(ksi)$
		In areas with bonded reinforcement sufficient to resist tensile force in the concrete	$0.19\sqrt{f'_{ci}}\,(ksi)$
	Compression	All Locations	$0.6f'_{ci}$
Temporary Stress at Shipping	Tensile	In areas other than precompressed tensile zone and without bonded reinforcement	$0.0948\sqrt{f'_{c}} \le 0.2(ksi)$
		In areas with bonded reinforcement other than precompressed tensile zone, plumb girder with impact	$0.19\sqrt{f'_{c}}\,(ksi)$
		In areas with bonded reinforcement other than precompressed zone, inclined girder without impact.	$0.24\sqrt{f'_{c}}\,(ksi)$
	Compression	All locations	$0.6f'_{c}$
Final Stresses at Service Load	Tensile	Precompressed tensile zone	0.0
	Compression	All Locations due to:	
		Permanent Loads and effective prestress loads	$0.45f'_{c}$
		Live load plus one-half permanent loads and effective prestress load	$0.4f'_{c}$
		All load combinations	$0.6f'_{c}$

Allowable Stresses in Prestressed Concrete Members
Table 5.2.3-1

5.2.4 Strength Limit State

A. Design Philosophy

In the strength limit state or previously referred as ultimate strength method, the service loads are increased by load factors to obtain the ultimate design load. The structural members are then proportioned to provide the design ultimate strength.

For flexural strength, it has been determined that AASHTO LRFD Specifications Section 5.7.3 underestimates the strength of the composite deck-girder system[5]. The strain compatibility method given in Section 8.2.2.5 of the PCI Bridge Design Manual 6 is recommended for this analysis. In addition to the effective area of the deck, the top flange of the girder and the mild reinforcement in the deck and the top flange of the girder should be included in the analysis. The typical section for computation of composite section properties is shown in Figure 5.2.4-1

B. Flexure

The basic strength design requirement can be expressed as follows:

Design Strength, $\phi M_n \geq M_u$ (5.2.4-1)

For design purposes, the area of reinforcement for a singly reinforced beam or slab can be determined by letting:

$$M_u = \varphi M_n = \varphi\left[A_s f_y (d - \frac{a}{2}) \right] \quad (5.2.4\text{-}2)$$

However, if $a = \frac{A_S f_y}{0.85 b f'_c}$ and $\rho = \frac{A_S}{bd}$ (5.2.4-3)

Equation (2) can be expressed as:

$$\frac{M_U}{\varphi b d^2} = \rho f_y \left(1 - 0.59 \frac{\rho f_y}{f'_c} \right) \quad (5.2.4\text{-}4)$$

Appendices 5.2-A1 through 5.2-A3 were prepared based on Equation (4) to quickly determine the amount of required reinforcing steel ($A_{S\ required}$), when M_u, f'_c, f_y, b, and d are known.

An alternate approach is to solve directly for $A_{S\ required}$ from:

$$A_{S.Required} = \frac{0.85 f'_c (b)}{f_y} \left(d - \sqrt{d^2 - \frac{2\left(12 \, in/ft\right) M_u}{0.85 \varphi f'_c (b)}}\right) \quad (5.2.4\text{-}5)$$

where:

M_u = ultimate flexural moment, ft-kips
f'_c = ultimate compressive strength of concrete, ksi

From AASHTO LRFD 5.7.3.3.2 $A_{S\ min}$ can be found from:

$$A_{S,\min} = \frac{0.85 f'_c (b)}{f_y} \left(d - \sqrt{d^2 - \frac{2\left(12 \, in/ft\right) 1.2 M_{cr}}{0.85 \varphi f'_c (b)}}\right) \quad (5.2.4\text{-}6)$$

where:

$\beta 1 = 0.85$ if $f'c' \leq 4$ ksi and
$\beta 1 = 0.85 - 0.05 (f'c - 4)$ if $f'c > 4$ ksi, but not less than 0.65

Tension reinforcement should be designed in the following order:

1. From Eq (5) or Appendices 5.2-A1 through 5.2-A3, determine $A_{S\ required}$.
2. From Eq (6) determine $A_{S\ min}$.
3. If As required > As min, use As = As required.
   If As required < 1.33 As required, use As = As min.
   If 1.33 As required < As min, use As = 1.33 As required.

See Appendix B for design examples.

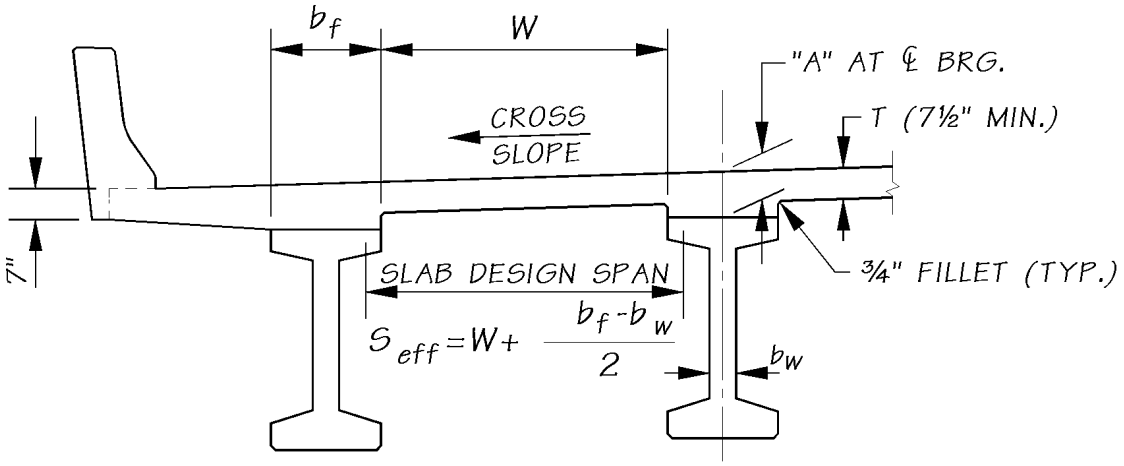

SECTION AS DETAILED

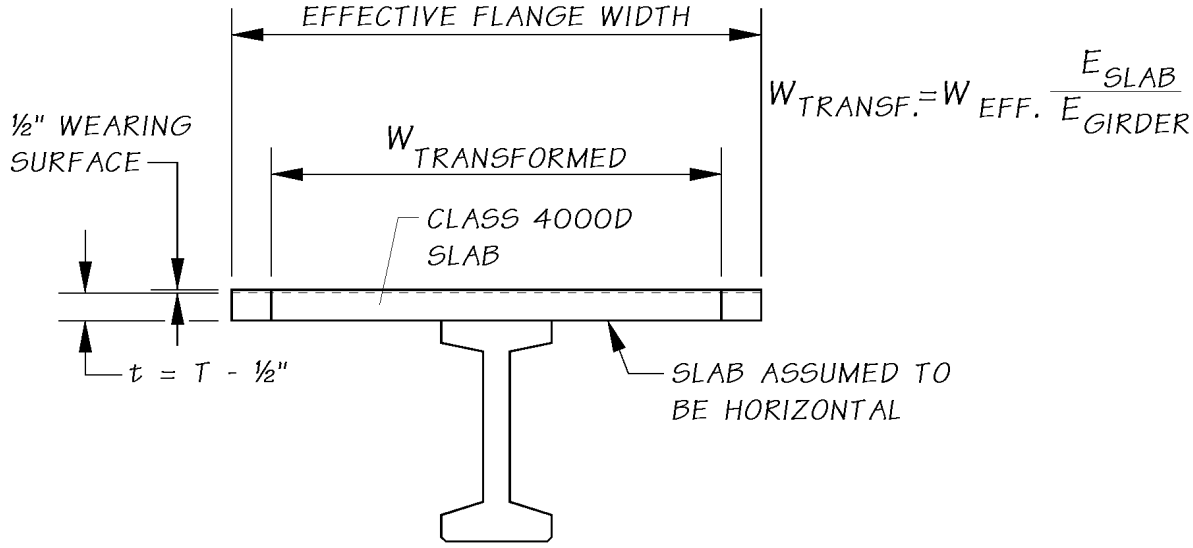

SECTION FOR COMPUTATION OF COMPOSITE SECTION PROPERTIES

Typical Section for Computation of Composite Section Properties
Figure 5.2.4-1

C. Shear

The AASHTO LRFD Specifications Section 5.8.3 addresses shear design of concrete members.

1. The shear design of prestressed members shall be based on the simplified general procedure of the AASHTO-LRFD Bridge Design Specifications Article 5.8.3.4.2. The β and θ equations are taken as:

$$\theta = 29 + 3500\varepsilon_s \tag{5.2.4-8}$$

If the section contains less than the minimum transverse reinforcement as specified in Article 5.8.2.5,

$$\beta = \frac{4.8}{(1+750\varepsilon_s)}\frac{51}{(39+S_{xe})} \tag{5.2.4-9}$$

$$\theta = 29 + 3500\varepsilon_s \tag{5.2.4-10}$$

Where strain in longitudinal reinforcement could be calculated from:

$$\varepsilon_s = \frac{\left(\frac{|M_u|}{d_v} + 0.5N_u + |V_u + V_p| - A_{ps}f_{po}\right)}{E_sA_s + E_pA_{ps}} \tag{5.2.4-11}$$

In the use of the above equations, the following should be considered:

- M_u should not be taken less than $|V_u + V_p|d_v$
- In calculating A_s and A_{ps} the area of bars or tendons terminated less than their development length from the section under consideration should be reduced in proportion to their lack of full development.
- If the value of ε_s calculated from Equation 5.2.4-11 is negative, it should be taken as zero or the value should be recalculated with the denominator of Equation 5.2.4-11 replaced by $(E_sA_s + E_pA_{ps} + E_cA_{ct})$. However, ε_s should not be taken as less than -0.40×10^{-3}.
- For sections closer than d_v to the face of the support, the value of ε_s calculated at d_v from the face of the support may be used in evaluating β and θ.
- If the axial tension is large enough to crack the flexural compression face of the section, the value calculated from Equation 5.2.4-11 should be doubled.
- It is permissible to determine β adn θ from Equation 5.2.4.8-10 using a value of ε_s which is greater than that calculated from Equation 5.2.4-11. However ε_s should not be taken greater than 6.0×10^{-3}.

2. The shear design of all nono-prestressed members shall be based on either the general procedure, or the simplified procedure of LRFD Article 5.8.3.4.1 using shear design parameters of:

   β = 2.0

   θ = 45°

3. The Strut-and-tie model shall be employed where applicable. The Strut-and-tie model is applicable to members where the plane section assumption of traditional engineering beam theory in not valid. The Strut-and-tie model as required by LRFD Article 5.8.1.1 and 2, applies to components in which the distance from the point of zero shear to the face of the support is less than 2d, or component in which the load causing more than ½ of the shear at the support is closer than 2d from the face of the support. Other potential application of Strut-and-tie model includes regions adjacent to abrupt changes in cross-section, opening, draped ends, deep beams corbels, integral bent caps, c-bent caps, outrigger bents, deep footings, and pile caps. The use of Strut-and-Tie model shall be in accordance with the requirement of LRFD Article 5.6.3.
4. LRFD 4th Edition Article 5.8.3.4.3 "Simplified Procedure for Shear design of Prestressed and Non-prestressed Concrete Sections" based on V_{ci} and V_{cw} shall not be used in design of WSDOT bridges.

D. Interface Shear

Shear friction provisions discussed in AASHTO LRFD Specifications Section 5.8.3 are applied to transfer shear across a plane, such as: an existing or potential crack, an interface between dissimilar materials, or at a construction joint between two sections of concrete placed at different times.

Interface shear in prestressed girder bridge design is critical at the interface connection between slab and girder, and at the end connection of the girder to the crossbeam in continuous bridges. Shear in these areas will normally be resisted by reinforcement extending from the girder.

1. Interface Shear Between Slab and Girder

   This shear represents a rate of change of compression load in the flange of simple span girders or a rate of change of tension load in the flange near the piers of continuous girders. For a simple span girder as represented by Figure 5.2.4-2, the top flange stress is the factored centerline moment divided by the section modulus of the composite girder at the centerline of the slab. The horizontal force in slab is this stress times the area of the slab. The factored centerline moment can be taken as total factored moment less 1.0 times dead load applied to girder.

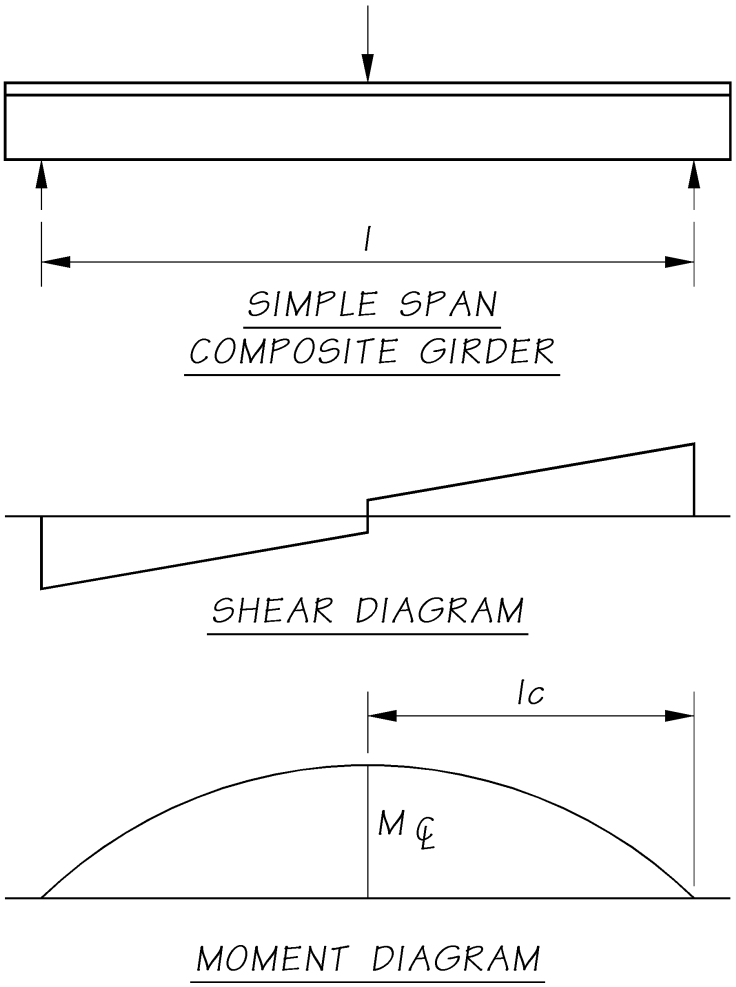

Shear Design for a Simple Span Girder
Figure 5.2.4-2

This shear is resisted by the girder stirrups which extend up through the interface between the girder and the slab. The top surface of the girder top flange must be roughened. The force may be assumed to be carried uniformly over the entire girder top surface from centerline of bearing to centerline of span.

For continuous girders, the span, shear, and moment relationships are shown in Figure 5.2.4-3. Similar methods are used to analyze slab to girder shear. For positive moment resistance, only those stirrups within length L_c are considered effective in resisting the slab force due to moment. Likewise, only those stirrups within one continuous length L_e are used to resist the negative moment slab force (tension) in that area.

For illustrative purposes, a single concentrated load has been shown. In actual practice, the point of factored maximum moment of the actual moment diagram would be used.

Other flange shear problems are described in Section 5.4. These problems also need to be considered for prestressed girder bridges.

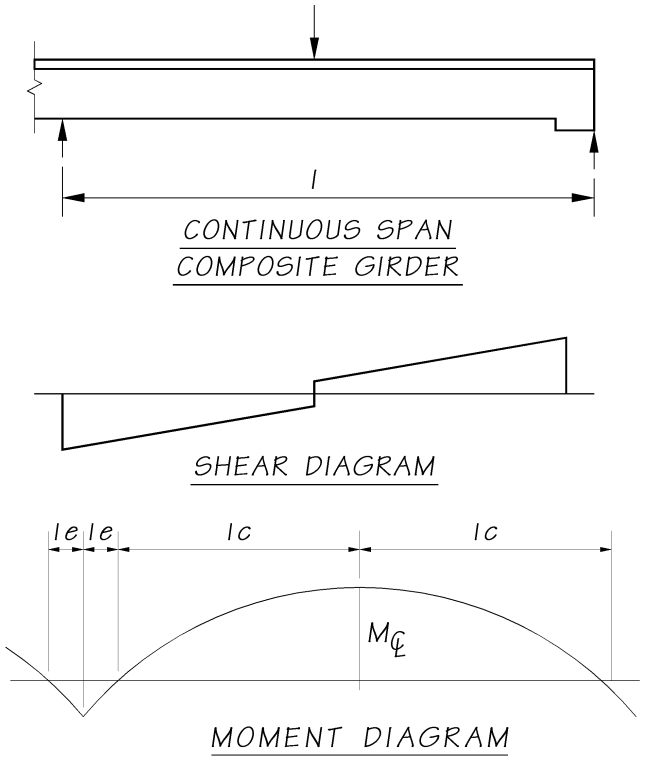

Shear Design for Continuous Span Girder
Figure 5.2.4-3

2. Interface Shear Friction at Girder End

   A continuous prestressed girder will nearly always be required to carry end reaction shears at the surface of the end of the girder.

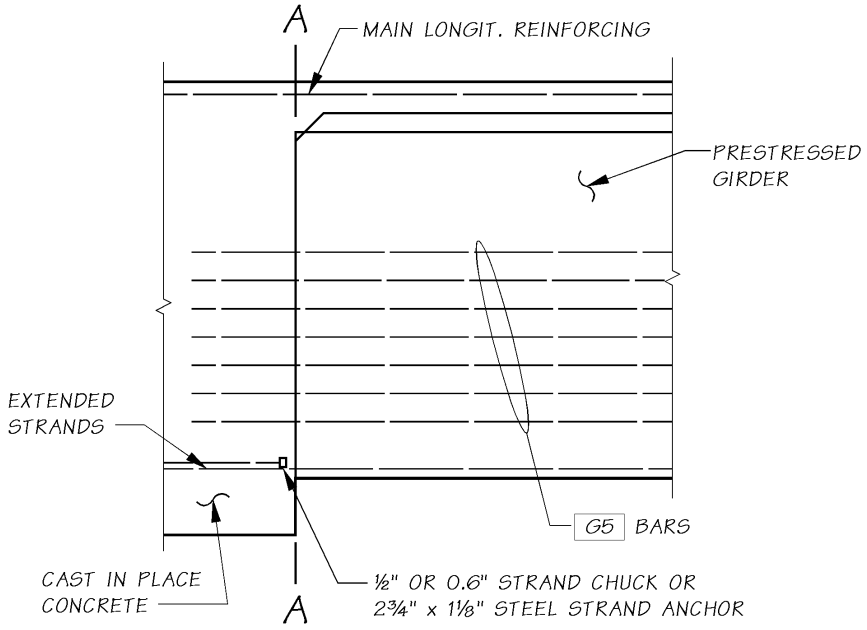

End Connection for a Continuous Span Prestressed Girder
Figure 5.2.4-4

The usual end condition is similar to that shown in Figure 5.2.4-4. The shear which must be carried along the interface A-A is the actual factored dead load and live load shear acting on the section. The girder end is required by the plans to be roughened. The saw-toothed shear key shown on the office standard girder plans may be assumed to provide a friction factor of 1.0. Shear resistance must be developed using shear friction theory assuming the longitudinal bars and the extended strands are actively participating. The main longitudinal slab reinforcement is already fully stressed by girder bending moments and thus cannot be considered for shear requirements. All bars, including the extended strands, must be properly anchored in order to be considered effective. This anchorage requirement must be clearly shown on the plans.

The factored shear at the end of prestressed girders shall be transferred to diaphragm. The design for saw tooth shear keys at girder ends for shear transfer to cast-in-place pier diaphragm shall be based on AASHTO LRFD Specifications Section 5.8.4.1.

$$V_n = c\,A_{cv} + \mu\,(A_{uf} f_y + P_c) < 0.2\,f'_c\,A_{cv} < 0.8\,A_{cv} \qquad (5.2.4\text{-}1)$$

Where:

c = 0.10 ksi, and $\mu = 1.0\,\lambda$, with $\lambda = 1.0$ for normal weight concrete

Note that similar requirements exist for connecting the end diaphragm at bridge ends where the diaphragm is cast on the girders. In this case, however, loads consist only of the factored diaphragm dead load, approach slab dead load, and those wheel loads which can distribute to the interface. Longitudinal reinforcement provided at girder ends shall be identical in both ends of the girder for construction simplicity.

3. Stirrups

Shear for computation of stirrup requirements is computed at d_v from the end of the girder and at the harping point. Ultimate shear is computed at these points based on 1.25 DC + 1.75 (LL + IM). The portion of this shear which is carried by the concrete is given in Section 5.8.4 of AASHTO LRFD Specifications. The stirrup spacing is then calculated using the formula:

$$S = \frac{A_v \cdot f_y\, d_v}{V_s} \qquad (5.2.4\text{-}2)$$

where :

$$V_s = \frac{V_u}{0.9} - V_c$$

d_v = distance from the extreme compressive fiber to the centroid of the prestressing force.

For precast girders made continuous for live load, d shall be the distance from the extreme compressive fiber to the centroid of the negative moment reinforcement, i.e., d = h + A - 4.5″,

where:

h = height of the girder

A = as defined in Appendix B.

If the stirrup spacing at the point of critical section for shear, d_v from the end of the girder, is smaller than about 1′-2″, further interpolation may be done to obtain a multiple step increment of stirrup spacing.

4. End Section Reinforcement

   The Washington State Standard Prestressed Concrete Girders are not provided with a thickened end block section, but have constant thickness webs. The end section reinforcement is detailed on the Office Standard Plans. This reinforcement is based on the requirement to resist bursting forces due to strand force development in this area. If the stirrup spacing required at the end of the girder is less than shown on the Office Standard Plans, end section stirrups spacing on the Standard Plans should be altered to show this spacing. For a distance of 1.5d from the end of the girder, reinforcement shall be placed to confine the prestressing steel in bottom flange. The spacing of confinement reinforcement shall not exceed 6 inch and shall be shaped to enclose the strands.

E. Shear Reinforcement in End Region

1. The end region is considered to be about 1.5 times the depth of the girder, h, from the end of the girder.

2. The splitting resistance, P_r, of pretensioned anchorage zones provided by vertical reinforcement in the ends of pretensioned beams at the service limit state shall be taken as:

   $P_r = f_s A_s$

   where:

   f_s = stress in steel not to exceed 20 ksi
   A_s = total area of vertical reinforcement located within the distance h/4 from the end of the pretensioned girder ($in.^2$)
   h = overall depth vertical or horizontal dimension of pretensioned girder where slpitting resistance is being evaluated (in.)

   The resistance shall not be lass than 4 percent of the total prestressing force at prior to transfer.

   For pretensioned I-girders or bulb tees, A_s shall be taken as the total area of the vertical reinforcement located within a distance of h/4 from the end of the member, where the overall height of the member. The end vertical reinforcement shall not be larger than #5 bars and spacing shall not be less than 2¼″. The remaining splitting reinforcement not fitting within the h/4 zone my be placed beyond the h/4 zone at a spacing of 2¼″.

   For pretensioned solid or voided slabs, A_s shall be taken as the total area of the horizontal reinforcement located within a distance of h/4 from the end of the member, where h is the overall width of the member.

   For pretensioned solid or voided slabs, A_s shall be taken as the total area of vertical reinforcement or horizontal reinforcement located within a distance h/4 from the end of the member, where h is the lesser of the overall width or height of the member.

   For pretensioned double tees and tri beams, A_s shall be taken as the total area of vertical reinforcement, divided evenly among the webs, and located within a distance h/4 from the end of each web.

3. Other reinforcement shown in the end region accounts for vertical shear for the span configurations above and four (4) support conditions,

    1. Lifting with no reaction at the end region, i.e. lifting devices located interior from the end of the girder,
    2. Girder plus three intermediate diaphragms plus 20 psf supported on oak bunking block,
    3. Bridge reactions on elastomeric bearings introducing compression into the end region, and
    4. Bridge reactions at the end face of the girder (End Types C and D).

    The designer shall investigate any additional vertical reinforcement for reaction forces, in the direction of the applied shear, along the vertical end face of the girder. This applies to girder end types A, C and D, where all loads are eventually transferred to the face of the hinge diaphragm or crossbeam. Adequate vertical shear reinforcing is required to take the reaction back up to the top of the girder near the diaphragm interface.

F. Shear Reinforcement Beyond End Region

1. Shear reinforcement size and spacing beyond the end region of the girder shall be determined by the designer. The variation in reinforcing demand for the entire range of span and spacing configurations is considerable. The shear reinforcement is likely to be light, or nominal, for the longest single piece spans with a narrow girder spacing, whereas the demand will be significant well out into the span for shorter spans with wide girder spacing.
2. The minimum angle theta, θ, for calculating shear reinforcement should be 25 degrees to avoid excessive horizontal tension demand through the bottom corner of the girder by the AASHTO LRFD modified compression field theory.

G. Shear and Torsion

The design for shear and torsion is based on ACI 318-02 Building Code[7] Requirements for Structural Concrete and Commentary (318F-02) and is satisfactory for bridge members with dimensions similar to those normally used in buildings. The AASHTO LRFD Specifications Section 5.8.3.6 may also be used for design of sections subjected to shear and torsion.

According to Hsu[10], utilizing ACI 318-02 for members is awkward and overly conservative when applied to large-size hollow members. Collins and Mitchell[11] propose a rational design method for shear and torsion based on the compression field theory or strut and tie method for both prestressed and non-prestressed concrete beams. These methods assume that diagonal compressive stresses can be transmitted through cracked concrete. In addition to transmitting these diagonal compressive stresses, shear stresses are transmitted from one face of the crack to the other by a combination of aggregate interlock and dowel action of the stirrups.

For recommendations and design examples for beams in shear and torsion, the designer can refer to the paper by M.P. Collins and D. Mitchell, Shear and Torsion Design of Prestressed and Non-Prestressed Concrete Beams, PCI Journal, September-October 1980, pp. 32-100[11].

5.2.5 Strut-and-tie Model

A. General

Strut-and-tie models may be used to determine internal force effects near supports and the points of application of concentrated loads[1].

The strut-and-tie model should be considered for the design of deep beams and pile caps or other situations in which the distance between the centers of applied load and supporting reaction is less than twice the member thickness. Design and detailing considerations for strut-and-tie modeling is covered in AASHTO LRFD Section 5.6.3. The resistance factors applicable to strut-and-tie design is covered in AASHTO LRFD Section 5.5.4.2. See Appendix 5-B for a strut and tie design example for a pier cap.

5.2.6 Deflection and Camber

A. General

Flexural members are designed to have adequate stiffness to limit deflections or any deformations which may adversely affect the strength or serviceability of the structure at service load plus impact. The minimum superstructure depths are specified in AASHTO LRFD Table 2.5.2.6.3-1 and deflections shall be computed in accordance with AASHTO LRFD Specifications Section 5.7.3.6.2.

B. Camber Multiplier

Deflections of prestressed concrete beams can be predicted with greater accuracy than those for reinforced concrete beams. Since prestressed concrete is more or less homogeneous and obeys ordinary laws of flexure and shear, the deflection can be computed using elementary methods. However, accurate predictions of the deflections are difficult to determine, since modulus of elasticity of concrete, Ec, varies with stress and age of concrete. Also, the effects of creep on deflections are difficult to estimate. For practical purposes, an accuracy of 10 to 20 percent is often sufficient. Prestressing can be used advantageously to control deflections, however, there are cases where excessive camber due to prestress have caused problems. For normal design, in lieu of more accurate methods, the deflection and camber of prestressed members may be estimated by the multipliers as given in Table 5.2.6-1.

	40 Days		120 Days	
	Non-Composite	Composite	Non-Composite	Composite
Deflection at Erection				
Apply to the elastic deflection due to the member weight at release of prestress	1.85	1.85	1.75	1.75
Apply to the elastic deflection due to prestressing at release of prestress	1.80	1.80	1.70	1.70
Deflection at Final				
Apply to the elastic deflection due to the member weight at release of prestress	2.70	2.40	2.50	2.20
Apply to the elastic deflection due to prestressing at release of prestress	2.45	2.20	2.25	2.10
Apply to the elastic deflection due to the Super Imposed Dead Loads	3.00	3.00	2.75	2.75
Apply to the elastic deflection due to weight of slab	----	2.30	----	2.15

Multipliers for Estimating Long-term Deflection of Prestressed Concrete Girders

Table 5.2.6-1

The computer program 'PGSUPER' is used to determine the amount of girder camber for prestressed girder bridges. This program computes the deflections due to prestress, girder dead load, slab dead load, and live load.

C. Deflection Calculation

Figure 5.2.6-1 shows a typical pattern of girder deflection with time at centerline span. Portions of this characteristic curve are described below. The subparagraph numbers correspond with circled numbers on the curve.

1. Elastic Deflection Due to Prestress Force

   The prestress force produces moments in the girder tending to bow the girder upward. Resisting these moments are girder section dead load moments. The result is a net upward deflection. In addition, a shortening of the girder occurs due to axial prestress loading.

2. Creep Deflection Before Cutting Temporary Strands

   The girder continues to deflect upward due to the effect of creep. This effect is computed using the equation stated in Section 5.1.1E.

3. Deflection Due to Removal of Temporary Strands

   Removal of temporary strands results in an elastic upward deflection.

4. Diaphragm Load Deflection

   The load of diaphragm is applied to the girder section resulting in an elastic downward deflection.

5. Creep Deflection After Casting Diaphragms

   The girder continue to deflect upward for any time delay between diaphragms and slab casting.

6. Slab Load Deflection

   The load of the slab is applied to the girder section resulting in an elastic downward deflection. It is this deflection which is offset by the screed camber that is to be applied to the bridge deck during construction.

7. Superimposed Dead Load Deflection

   Downward deflection due to SIDL such as traffic barriers, sidewalk, and overlay.

8. Final Camber

   It might be expected that the above slab dead load deflection would be accompanied by a continuing downward deflection due to creep. Many measurements of actual structure deflections have shown, however, that once the slab is poured, the girder tends to act as though it is locked in position. To obtain a smooth riding surface on the deck, the deflection indicated on Figure 5.2.6-1 as "Screed Camber" is added to the profile grade elevation of the deck screeds. The actual position of the girder at the time of the slab pour has no effect on the screed camber.

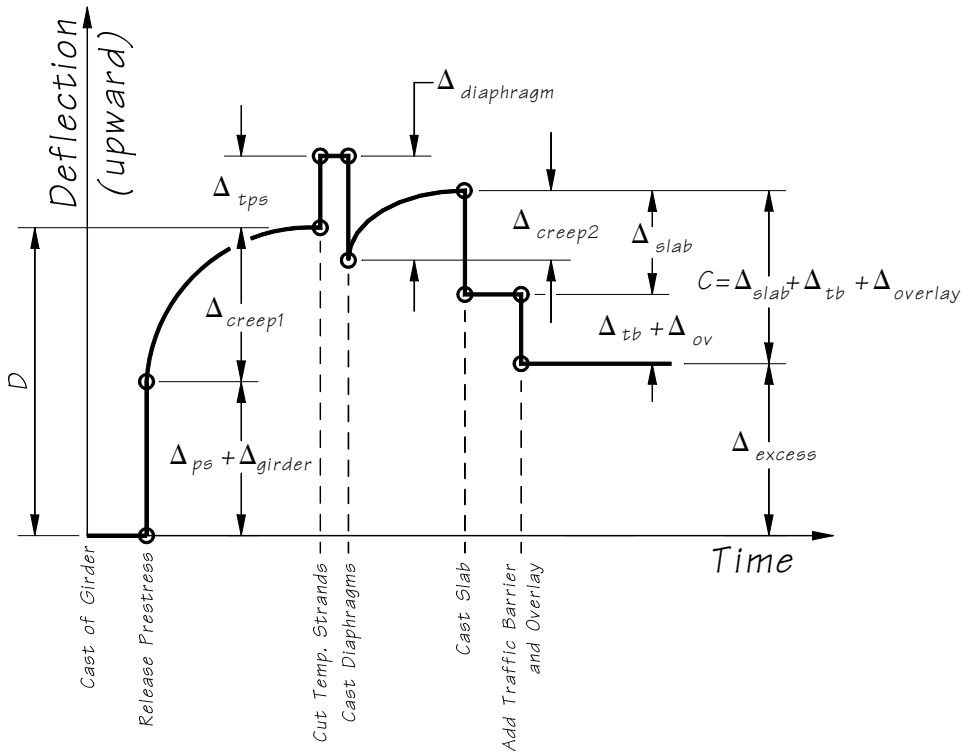

Prestressed Girder Camber
Figure 5.2.6-1

5.2.7 Serviceability

In addition to the deflection control requirements described above, service load stresses shall be limited to satisfy fatigue and for distribution of tension reinforcement when f_y for tension reinforcement exceeds 40,000 psi.

A. Serviceability Requirements

The cracking control of the concrete, tension reinforcement at maximum positive and negative moment sections shall satisfy the requirements of AASHTO-LRFD Section 5.7.3.4 for class 2 exposure condition.

5.2.8 Connections (Joints)

The connections or joints must divide the structure into a logical pattern of separate elements which also permit ease of manufacture and assembly.

The connection or joint surfaces should be oriented perpendicular to the centroidal axis of the precast element.

A. Types of Connections (Joints):

Connections or joints are either wide or match cast. Depending on their width, they may be filled with cast-in-place concrete or grout. Match cast joints are normally bonded with an epoxy bonding agent. Dry match cast joints are not recommended.

B. Shear and Alignment Keys:

In order to assist shear transmission in wide joints, use a suitable system of keys. The shape of the keys may be chosen to suit a particular application and they can be either single keys or multiple keys. Single keys are generally large and localized whereas multiple keys generally cover as much of the joint surface area as is practical.

Single keys provide an excellent guide for erection of elements. Single keys are preferred for all match cast joints.

For all types of joints, the surfaces must be clean, free from grease and oil, etc. When using epoxy for bonding, the joints should be lightly sandblasted to remove laitance. For cast-in-place or other types of wide joints, the adjacent concrete surfaces should be roughened and kept thoroughly wet, prior to construction of the joint. Cast-in-place joints are generally preferred.

5.2.9 Revised Provisions for Flexural Design

A. Introduction

This section introduces the necessary revisions to AASHTO LRFD specifications for more accurate flexural resistance calculations. The provisions described herein are adapted to WSDOT PGSuper program for the design of prestressed members.

B. Necessary Revisions to LRFD Specification

The AASHTO LRFD Specifications contain provisions for calculating the flexural strength of T-beams that are not consistent with the original derivation of the effective rectangular stress block as applied to beams where the neutral axis drops into the web. The proposed revisions revert to the calculation methods of the ACI 318 and the Standard Specifications, with the exception that the LRFD method of calculating the stress in the prestressing steel at nominal flexural strength is retained. Research[31, 32, 33, 34] has shown that the LRFD equations provide a more realistic estimate of the stress in the prestressing steel at nominal flexural strength if T-beam behavior is assumed to begin when "a" becomes greater than h_f.

To implement these revisions, the current LRFD Equations 5.7.3.1.1-3 and 5.7.3.1.2-3 for T-beam behavior shall be modified by deleting β_2 from the last term of the numerator as shown below:

For sections with bonded tendons:

$$c = \frac{A_{ps} f_{pu} + A_s f_y - A'_s f'_y - 0.85 f'_c (b - b_w) h_f}{0.85 f'_c \beta_1 b_w + k A_{ps} \frac{f_{pu}}{d_p}} \qquad (5.2.9\text{-}1)$$

For sections with unbonded tendons:

$$c = \frac{A_{ps} f_{ps} + A_s f_y - A'_s f'_y - 0.85 f'_c (b - b_w) h_f}{0.85 f'_c \beta_1 b_w} \qquad (5.2.9\text{-}2)$$

Consequently, the nominal flexural resistance of LRFD Equation 5.7.3.2.2-1 shall be modified by deleting β_1 from the last term as shown below:

$$M_n = A_{ps} f_{ps} \left(d_p - \frac{a}{2} \right) + A_s f_y \left(d_s - \frac{a}{2} \right) - A'_s f'_y \left(d'_s - \frac{a}{2} \right) + 0.85 f'_c (b - b_w) h_f \left(\frac{a}{2} - \frac{h_f}{2} \right) \qquad (5.2.9\text{-}3)$$

C. Nominal Flexural Resistance

1. Theoretical Background

These provisions could be considered a philosophical change to traditional flexural resistance calculations of reinforced and prestressed concrete members. In these provisions sections are considered either tension –controlled, transition or - compression controlled. Classifying sections as tension-controlled, transition or compression-controlled, and linearly varying the resistance factor in the transition zone between values for the two extremes, provides a rational approach for determining ϕ and limiting the capacity of over-reinforced sections.

Sections are compression-controlled when the net tensile strain in the extreme tension steel is equal to or less than the compression-controlled strain limit at the time the concrete in compression reaches its assumed strain limit of 0.003. The compression-controlled strain limit is the net tensile strain in the reinforcement at balanced strain conditions. For Grade 60 reinforcement, and for all prestressed reinforcement, the compression-controlled strain limit may be set equal to 0.002.

Sections are tension-controlled when the net tensile strain in the extreme tension steel is equal to or greater than 0.005 just as the concrete in compression reaches its assumed strain limit of 0.003. Sections with net tensile strain in the extreme tension steel between the compression-controlled strain limit and 0.005 constitute a transition region between compression-controlled and tension-controlled sections.

Balanced strain conditions exist at a cross section when tension reinforcement reaches the strain corresponding to its specified yield strength f_y just as the concrete in compression reaches its assumed ultimate strain of 0.003.

For beams with compression reinforcement, or T-beams, the effects of compression reinforcement and flanges are automatically accounted for in the computation of net tensile strain ε_t. The use of compression reinforcement in conjunction with additional tension reinforcement is permitted to increase the strength of flexural members.

2. Nominal Flexural Resistance

The nominal flexural resistance of a member is reached when the strain in the extreme compression fiber reaches the assumed strain limit of 0.003. The net tensile strain εt is the tensile strain in the extreme tension steel at nominal strength, exclusive of strains due to prestress, creep, shrinkage and temperature. The net tensile strain in the extreme tension steel is determined from a linear strain distribution at nominal strength, as shown in Figure 5.2.9-1, using similar triangles.

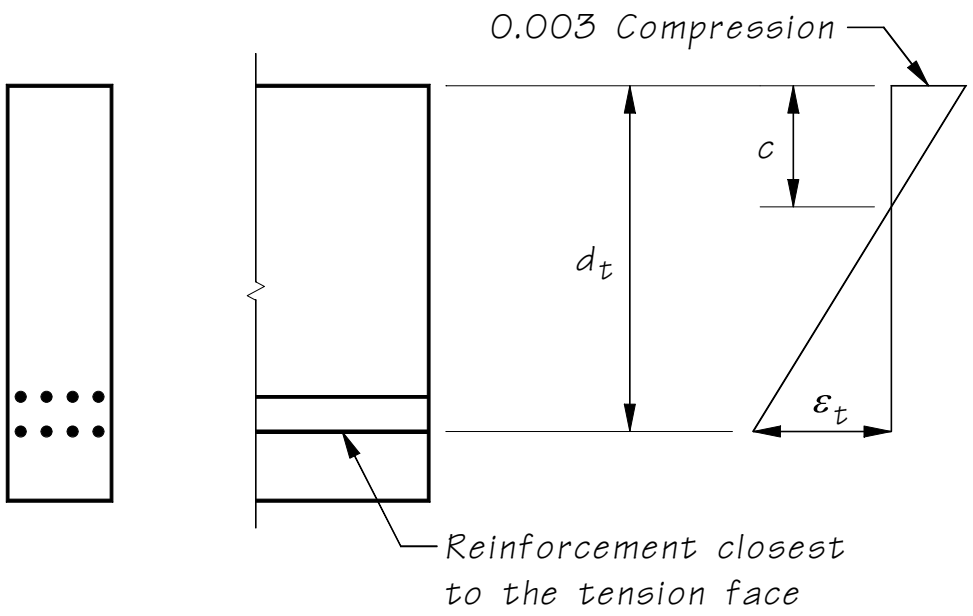

Strain distribution and net tensile strain
Figure 5.2.9-1

When the net tensile strain in the extreme tension steel is sufficiently large (equal to or greater than 0.005), the section is defined as tension-controlled where ample warning of failure with excessive deflection and cracking may be expected. When the net tensile strain in the extreme tension steel is small (less than or equal to the compression-controlled strain limit), a brittle failure condition may be expected, with little warning of impending failure. Flexural members are usually tension-controlled, while compression members are usually compression-controlled. Some sections, such as those with small axial load and large bending moment, will have net tensile strain in the extreme tension steel between the above limits. These sections are in a transition region between compression- and tension-controlled sections.

3. Resistance Factors

The resistance factors for tension-controlled and compression-controlled sections, and for intermediate cases in the transition region shall be taken as follows:

		Precast Members	Cast-in-Place Members
Conventional Construction (other than Segmentally constructed Bridges)	Mild Reinforcement	1.0	0.9
	Prestressed	1.0	0.9
	Spliced Girders	0.95	

Flexural Resistance Factor for Tension-Controlled Concrete Members
Table 5.2.9-1

For compression-controlled members, regardless of the method of construction, the flexural resistance factor will continue to be taken as 0.75.

For members in the transition zone between tension-controlled and compression-controlled, the flexural resistance factor shall be taken as follows:

For precast members:

$$0.75 \le \varphi = 0.583 + 0.25\left(\frac{d_t}{c} - 1\right) \le 1.0 \qquad (5.2.9\text{-}4)$$

For cast-in-place members:

$$0.75 \le \varphi = 0.650 + 0.15\left(\frac{d_t}{c} - 1\right) \le 0.9 \qquad (5.2.9\text{-}5)$$

For precast spliced girders with cast-in-place closures:

$$0.75 \le \varphi = 0.616 + 0.20\left(\frac{d_t}{c} - 1\right) \le 0.95 \qquad (5.2.9\text{-}6)$$

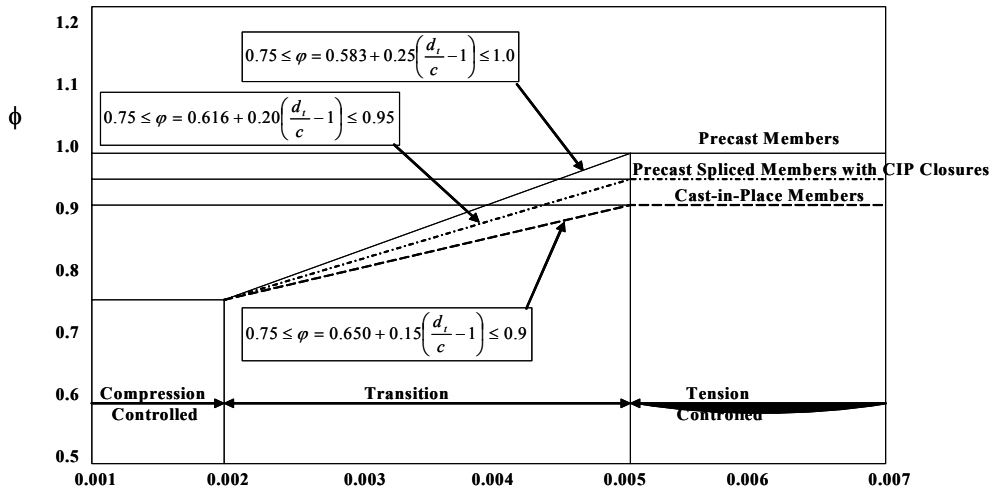

Variation of φ with Net Tensile strain ε_t
Figure 5.2.9-2

D. Limit of Reinforcement

The LRFD Specifications do not handle maximum reinforcement limits for prestressed and non-prestressed flexural members in a consistent manner. While over-reinforced non-prestressed flexural members are not allowed, over-reinforced prestressed flexural members are allowed if sufficient ductility of the structure can be achieved.

LRFD specifications limit the tension reinforcement quantity to a maximum amount such that the ratio c/d_e did not exceed 0.42. Sections with $c/d_e > 0.42$ were considered over-reinforced. Over-reinforced nonprestressed members were not allowed, whereas prestressed and partially prestressed members with PPR greater than 50 percent were if "it is shown by analysis and experimentation that sufficient ductility of the structure can be achieved." No guidance was given for what "sufficient ductility" should be, and it was not clear what value of ϕ should be used for such over-reinforced members. These provisions eliminate this limit and unify the design of prestressed and nonprestressed tension- and compression-controlled members. The background and basis for these provisions are given in references 31, 32, 33 and 34.

E. Moment Redistribution

In lieu of more refined analysis, where bonded reinforcement is provided at the internal supports of continuous reinforced concrete beams, negative moments determined by elastic theory at strength limit states may be increased or decreased by not more than 1000 ε_t percent, with a maximum of 20 percent. Redistribution of negative moments shall be made only when ε_t is equal to or greater than 0.0075 at the section at which moment is reduced.

Unless unusual amounts of ductility are required, the 0.005 limits will provide ductile behavior for most designs. One condition where greater ductile behavior is required is in design for redistribution of moments in continuous members and frames. Since moment redistribution is dependent on adequate ductility in hinge regions, moment redistribution is limited to sections that have a net tensile strain of at least 0.0075.

Design example 12 in Appendix B illustrates the flexural strength calculations for Composite T-Beam

5.2.10 Shrinkage and Temperature Reinforcement

Reinforcement for shrinkage and temperature stresses shall be provided near surfaces of concrete exposed to daily temperature changes and in structural mass concrete. Temperature and shrinkage reinforcement shall ensure that the total reinforcement on the exposed surfaces in not less than that specified herein. Reinforcement for shrinkage and temperature may be in the form of bars, welded wire fabric or prestressing tendons.

For bar or welded wire fabric, the area or reinforcement per foot, on each face and in each direction shall satisfy:

$$A_s \geq \frac{1.30bh}{2(b+h)f_y} \qquad (5.2.10\text{-}1)$$

$$0.11 \leq A_s \leq 0.60 \qquad (5.2.10\text{-}2)$$

where:

A_s = area of reinforcement in each direction and each face (in^2/ft)
b = least width of component section (in.)
h least thickness of component section (in.)
b specified yield strength of reinforcing bars $\leq$ 75 ksi

Where the least dimension varies along the length of wall, footing, or other component, multiple sections should be examined to represent the average condition at each section. Spacing is not the exceed:

- 3.0 times the component thickness, or 18.0 in.
- 12.0 in. for walls and footings over 18.0 in. thick
- 12.0 for other components over 36.0 in. thick

For components 6.0 in. or less in thickness the minimum steel specified may be placed in a single layer. Shrinkage and temperature steel is not required for:

- End face of walls 18 in. or less in thickness
- Side faces of footings 36 in. or less in thickness
- Faces of all other components, with smaller dimension less than or equal to 18.0 in.

If prestressing tendons are used as steel for shrinkage and temperature reinforcement, the tendons shall provide a minimum average compressive stress of 0.11 reinforcement, the tendons shall provide a minimum average compressive stress of 0.11 ksi on the gross concrete area through which a crack plane may extend, based on the effective prestress after losses. Spacing of tendons should not exceed either 72.0 in. or the distance specified in Article 5.10.3.3. Where the spacing is greater than 54.0 in., bonded reinforcement shall be provided between tendons, for a distance equal to the tendon spacing.

5.2.11 Minimum Reinforcement Requirement

Unless otherwise specified, at any section of a flexural component, the amount of tensile reinforcement shall be adequate to develop a factored flexural resistance, M_r at least equal to:

- For nonprestressed flexural members, the amount of tensile reinforcement shall be adequate to develop 1.0 times the cracking moment, M_{cr}, and for prestressed flexural members, the amount of prestressed and nonprestressed tensile reinforcement shall be adequate to develop 1.33 times the cracking moment; where
- The cracking moment, M_{cr} is determined on the basis of elastic stress distribution and the modulus of rupture, f_r, of concrete as specified in LRFD Article 5.4.2.6. M_{cr} may be taken as:

$$M_{cr} = S_c\left(f_r + f_{cpe}\right) - M_{dnc}\left(\frac{S_c}{S_{nc}} - 1\right) \qquad (5.2.11\text{-}1)$$

where:

f_{cpe} = compressive stress in concrete due to effective prestress forces only (after allowance for all prestress losses) at extreme fiber of section where tensile stress is cause by externally applied loads (ksi)

M_{dnc} = total unfactored dead load moment acting on the monolithic or noncomposite section (kip-ft.)

S_c = section modulus for the extreme fiber of the composite section where tensile stress is caused by externally applied loads (in.^{3})

S_{nc} = section modulus for the extreme fiber of the monolithic or noncomposite section where tensile stress is caused by externally applied loads (in.^{3})

Appropriate values for M_{dnc} and S_{nc} shall be used for any intermediate composite sections. Where the beams are design for the monolithic or noncomposite section to resister all loads, substitute S_{nc} for S_c in the above equation for the calculation of M_{cr}.

This provision shall be permitted to be waived for:

- Nonprestressed members with flexural strength at least 1.33 times the factored moment required by the applicable strength load combinations specified in LRFD Table 3.4.1-1, and
- Prestressed members with flexural strength at least 2.0 times the factored moment required by the applicable strength load combinations specified in LRFD Table 3.4.1.-1

5.3 Reinforced Concrete Box Girder Bridges

This type of superstructure shall only be used for bridge widening and for bridges with tight curvature or unusual geometry.

A typical box girder bridge is comprised of top and bottom concrete slabs connected by a series of vertical girder stems. This section is a guide for designing top slab, bottom slab, and girder web. For design criteria not covered, see BDM Section 2.4.1.C.

5.3.1 Box Girder Basic Geometries

A. Web Spacing

The most economical web spacing for ordinary box girder bridges varies from about 8 to 12 feet. Greater girder spacing requires some increase in both top and bottom slab thickness, but the cost of the additional concrete can be offset by decreasing the total number of girder stems. Fewer girder stems reduces the amount of form work required and a lower cost.

The number of girder stems can be reduced by cantilevering the top slab beyond the exterior girders. A deck overhang of approximately one-half the girder spacing generally gives satisfactory results. This procedure usually results in a more aesthetic as well as a more economical bridge.

For girder stem spacing in excess of 12 feet or cantilever overhang in excess of 6 feet, transverse post-tensioning shall be used.

B. Basic Dimensions

The basic dimensions for concrete box girders with vertical web is shown in Figure 5.3.1-1 and the basic dimensions for box girders with sloped exterior webs is shown in Figure 5.3.1-2.

1. Top Slab Thickness, T1

   (includes ½″ wearing surface)

   $T1 = \frac{12(S+10)}{30}$ but not less than 7″ with overlay or 7.5″ without overlay.

2. Bottom Slab Thickness, T2

   a. Near center span

      $T2 = \frac{12(S_{clr})}{16}$ but not less than 5.5″ (normally 6.0″ is used).

   b. Near intermediate piers

      Thickening of the bottom slab is often used in negative moment regions to control compressive stresses that are significant.

      Transition slope = 24:1 (see T2 in Figure 5.3.1-1).

3. Girder Stem (Web) Thickness, T3

   a. Near center span

      Minimum T3 = 9.0″ — vertical

      Minimum T3 = 10.0″ — if sloped

   b. Near supports

      Thickening of girder stems is used in areas adjacent to supports to control shear requirements.

      Changes in girder web thickness shall be tapered for a minimum distance of 12 times the difference in web thickness.

      Maximum T3 = T3+4.0″ maximum

      Transition length = 12 x (T3) in inches

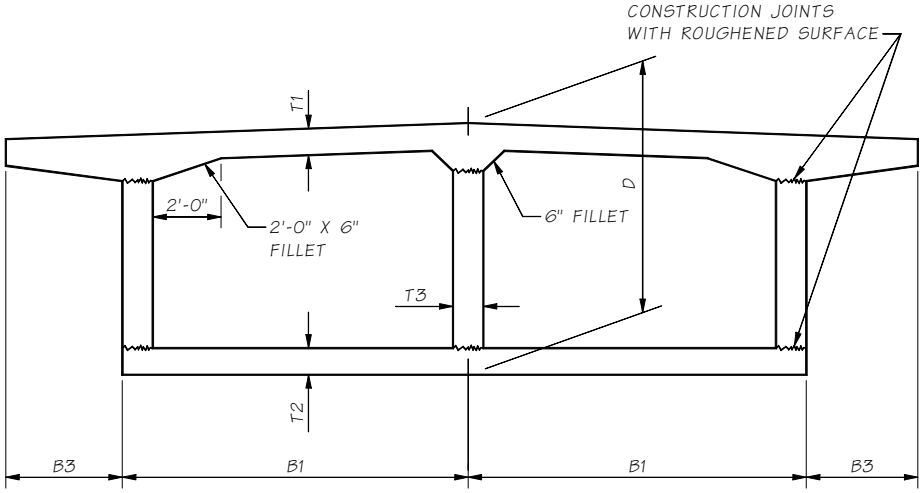

(a)

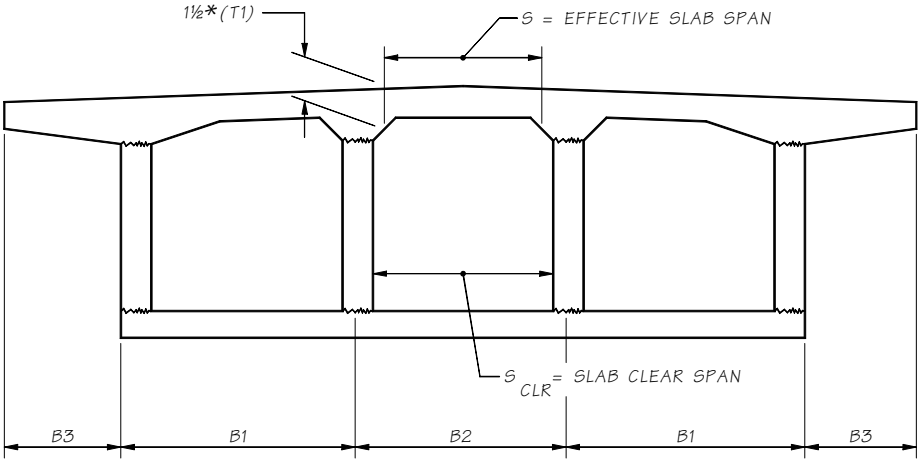

(b)

Basic Dimensions— Vertical Webs
Figure 5.3.1-1

4. Intermediate Diaphragm Thickness, T4 and Diaphragm Spacing

   a. For tangent and curved bridge with R > 800 feet

      T4 = 0″ (Diaphragms are not required.)

   b. For curved bridge with R < 800 feet

      T4 = 8.0″

      Diaphragm spacing shall be as follows:

      For 600′ < R < 800′at ½ pt. of span.

      For 400′ < R < 600′ at 1/3 pt. of span.

      For R < 400′ at ¼ pt. of span.

C. Construction Considerations

Review the following construction considerations to minimize constructability problems:

1. Construction joints at slab/stem interface or fillet/stem interface at top slab are appropriate.
2. All construction joints to have roughened surfaces.
3. Bottom slab is parallel to top slab (constant depth).
4. Girder stems are vertical.
5. Dead load deflection and camber to nearest ⅛″.
6. Skew and curvature effects have been considered.
7. Thermal effects have been considered.
8. The potential for falsework settlement is acceptable. This always requires added stirrup reinforcement in sloped outer webs.

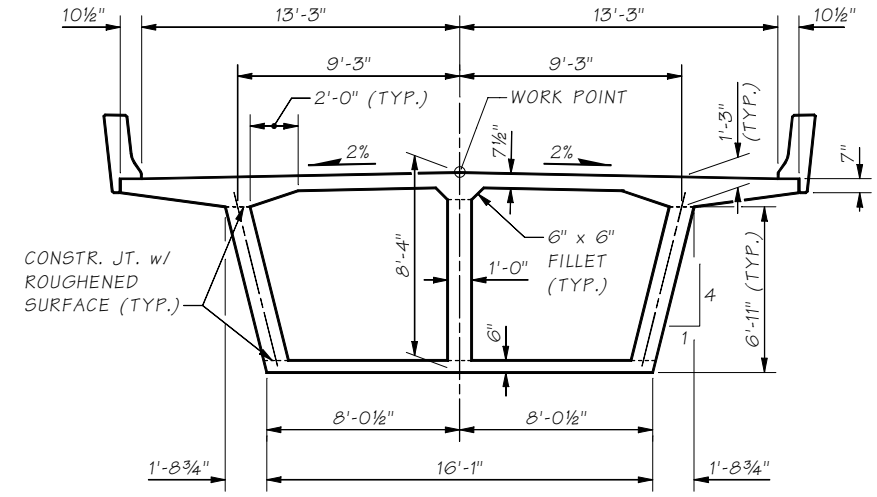

a - 2% CROWN

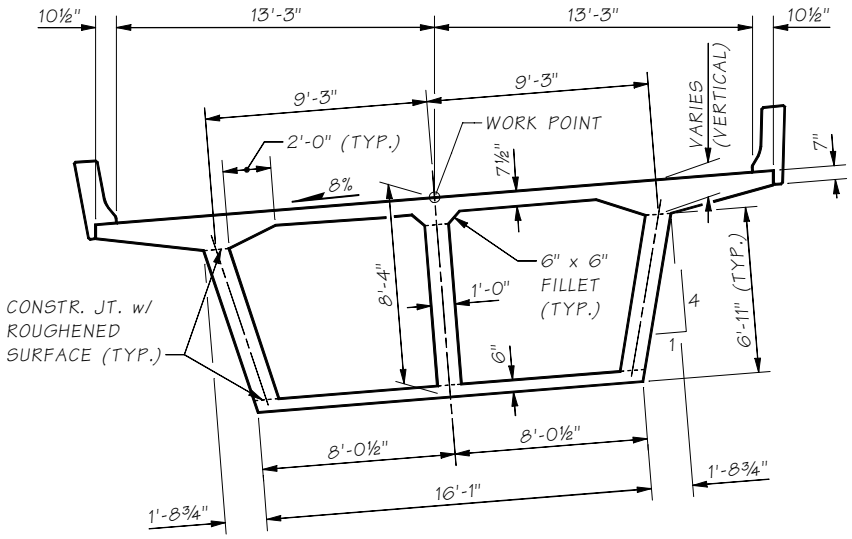

b - 8% SUPERELEVATION

BASIC DIMENSIONS
SLOPED WEBS

Dimensions are shown for demonstration only

Basic Dimensions-Sloped Webs
Figure 5.3.1-2

D. Load Distribution

1. Unit Design

   According to the AASHTO LRFD Specifications, the entire slab width shall be assumed effective for compression. It is both economical and desirable to design the entire superstructure as a unit rather than as individual girders. When a reinforced box girder bridge is designed as an individual girder with a deck overhang, the positive reinforcement is congested in the exterior cells. The unit design method permits distributing all girder reinforcement uniformly throughout the width of the structure.

2. Dead Loads

   a. Box dead loads.

   b. D.L. of top deck forms:

      5 lbs. per sq. ft. of the area.

      10 lbs. per sq. ft. if web spacing > 10′–0″.

   c. Traffic barrier.

   d. Overlay, intermediate diaphragm, and utility weight if applicable.

3. Live Load

   a. Superstructure

      The load distribution factor for multicell CIP concrete box girders shall be pre AASHTO LRFD Specifications for interior girders form Table 4.6.2.2.2b-1 for bending moment, and Table 4.6.2.2.3a-1 for shear. The live load distribution factor for interior girders shall then be multiplied by the number of webs to obtain the design live load for entire superstucture. The correction factor for live load distribution for skewed support as specified in Table 4.6.2.2.2e-1 for bending moment and 4.6.2.2.3c-1 for shear shall be considered.

      $DF = N_b \times Df_i$ Live load distribution factor for multicell box girder

      Where:

      Df_i = Live load distribution factor for interior web

      N_b = Number of webs

   b. Substructure

      No. of lanes = slab width (curb to curb) / 12

      Fractional lane width will be ignored

      For example, 58 roadway / 12 = 4.83, then No. of lanes = 4.0

c. Overload if applicable.

5.3.2 Reinforcement

This section discusses Flexural and Shear reinforcement for top slab, bottom slab, webs, and intermediate diaphragms in box girders.

A. Top Slab Reinforcement

1. Near Center of Span

   Figure 5.3.2-1 shows the reinforcement required near the center of the span and Figure 5.3.2-2 shows the overhang reinforcement.

   a. Transverse reinforcing in the top and bottom layers to transfer the load to the main girder stems.

   b. Bottom longitudinal "distribution reinforcement" in the middle half of the deck span in S_{eff} is provided to aid distributing the wheel loads.

   c. Top longitudinal "temperature and shrinkage reinforcement."

2. Near Intermediate Piers

   Figure 5.3.2-3 illustrates the reinforcement requirement near intermediate piers.

   a. Transverse reinforcing same as center of span.

   b. Longitudinal reinforcement to resist negative moment (see Figure 5.3.2-3).

   c. "Distribution of flexure reinforcement" to limit cracking shall satisfy the requirement of AASHTO LRFD Section 5.7.3.4 for class 2 exposure condition.

3. Bar Patterns

   a. Transverse Reinforcement

      It is preferable to place the transverse reinforcement normal to bridge center line and the areas near the expansion joint and bridge ends are reinforcement by partial length bars.

   b. Longitudinal Reinforcement

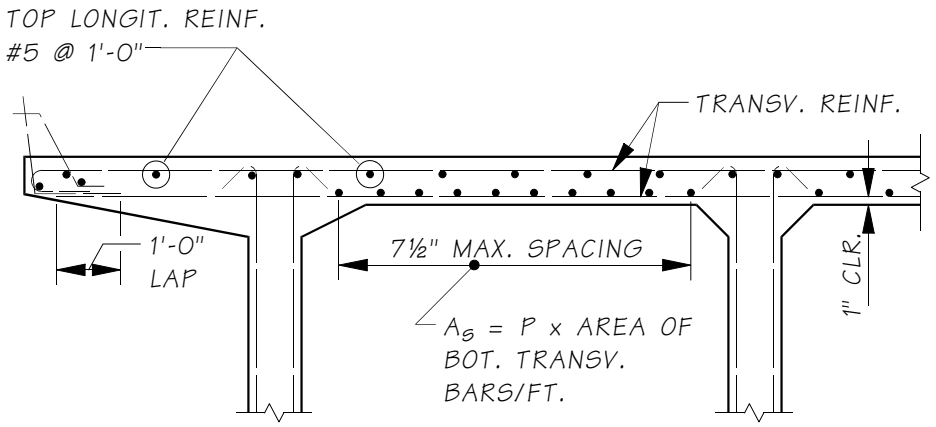

$$P = \frac{220}{\sqrt{S}} \qquad (MAX. = .67)$$

Partial Section Near Center of Span
Figure 5.3.2-1

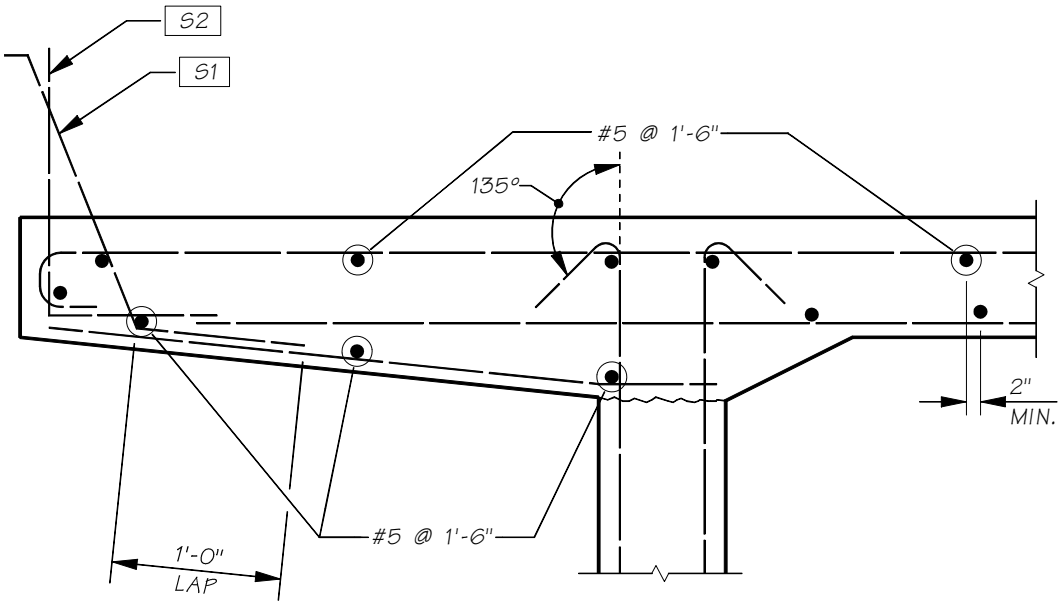

Overhang Detail
Figure 5.3.2-2

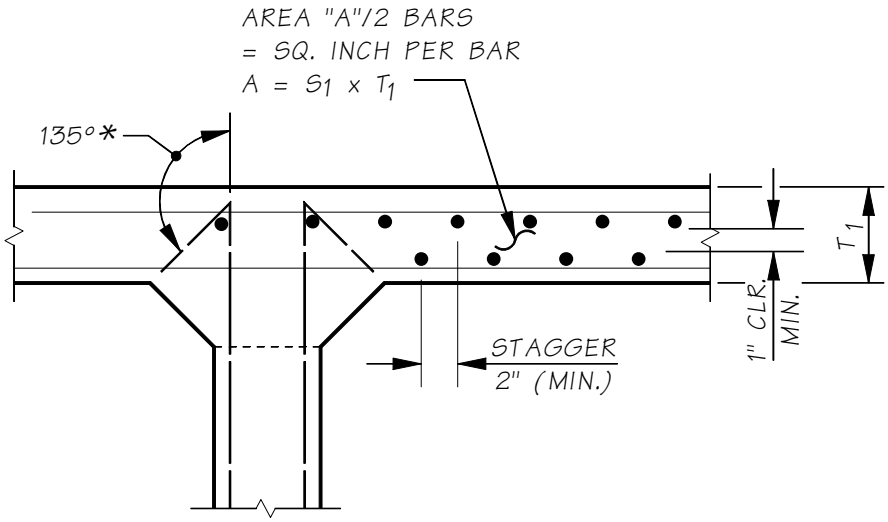

* ALL REBARS SHALL BE EPOXY COATED, BEND STIRRUPS 135 DEGREES. DO NOT EPOXY COAT STIRRUPS.

Top Slab Flexural Reinforcing Near Intermediate Pier
Figure 5.3.2-3

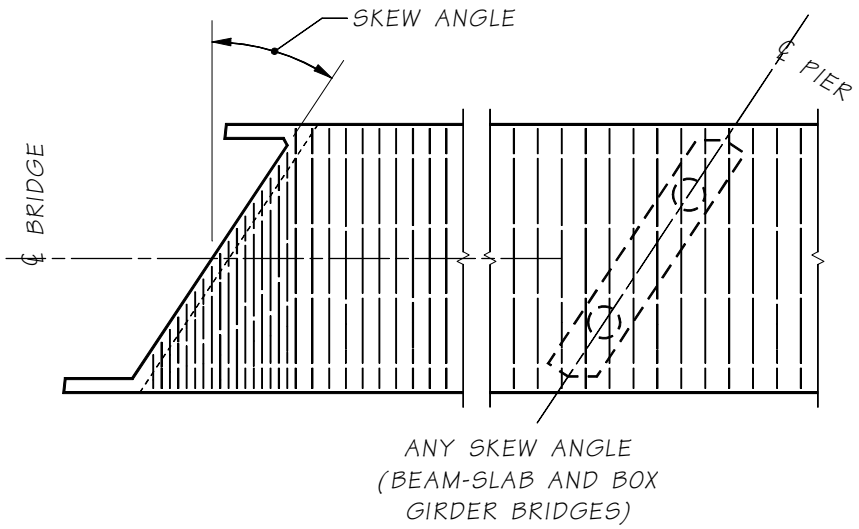

Partial Plans at Abutments
Figure 5.3.2-4

B. Bottom Slab Reinforcement

1. Near Center of Span

   Figure 5.3.2-5 shows the reinforcement required near the center of the span.

   a. Minimum transverse "distributed reinforcement."

      A_s=0.005 x flange area with ½ A_S distributed equally to each surface.

   b. Longitudinal "main reinforcement" to resist positive moment.

   c. Check "distribution of flexure reinforcement" to limit cracking per AASHTO LRFD Section 5.7.3.4 for class 2 exposure condition.

   d. Add steel for construction load (sloped outer webs).

2. Near Intermediate Piers

   Figure 5.3.2-6 shows the reinforcement required near intermediate piers.

   a. Minimum transverse reinforcement same as center of span.

   b. Minimum longitudinal "temperature and shrinkage reinforcement."

      A_s=0.004 x flange area with ½ A_S distributed equally to each face.

   c. Add steel for construction load (sloped outer webs).

3. Bar Patterns

   a. Transverse Reinforcement

      See top slab bar patterns, Figures 5.3.2-1, 5.3.2-2, and 5.3.2-3.

      All bottom slab transverse bars shall be bent at the outside face of the exterior web. For a vertical web, the tail splice will be 1′–0″ and for sloping exterior web 2′–0″ minimum splice with the outside web stirrups. See Figure 5.3.2-7. The bottom transverse slab reinforcement is discontinued at the crossbeam (see Figure 5.3.2-4).

   b. Longitudinal Reinforcement

      For longitudinal reinforcing bar patterns, see Figure 5.3.2-5 and 5.3.2-6.

C. Web Reinforcement

1. Vertical Stirrups

   Vertical stirrups for a reinforced concrete box section is shown in Figure 5.3.2-8.

   The web reinforcement should be designed for the following requirements:

   Vertical shear requirements.

   - Out of plane bending on outside web due to live load on cantilever overhang.
   - Horizontal shear requirements for composite flexural members.
   - Minimum stirrups shall be:

$$\frac{A_v}{s} = 50\frac{b_w}{f_y} \qquad (5.3.2\text{-}2)$$

   but not less than #5 bars @ 1′–6″,

   Where: b_W is the number of girder webs x T3

2. Web Longitudinal Reinforcement

   Web longitudinal reinforcement for reinforced concrete box girders is shown in Figure 5.3.2-8 and Figure 5.3.2-9. The area of skin reinforcement A_{sk} per foot of height on each side face shall be:

$$A_{sk} \geq 0.012\ (d - 30) \qquad (5.3.2\text{-}3)$$

   Reinforcing steel spacing < Web Thickness (T3) or 12″.

   The maximum spacing of skin reinforcement shall not exceed the lesser of d/6 and 12 inches. Such reinforcement may be included in strength computations if a strain compatibility analysis is made to determine stresses in the individual bars or wires. The total area of longitudinal skin reinforcement in both faces need not exceed one half of the required flexural tensile reinforcement.

   For cast-in-place sloped outer webs, increase inside stirrup reinforcement and bottom slab top transverse reinforcement as required for the web moment locked-in during construction of the top slab. This moment about the bottom corner of the web is due to tributary load from the top slab concrete placement plus 10 psf form dead load. See Figure 5.3.2-10 for typical top slab forming.

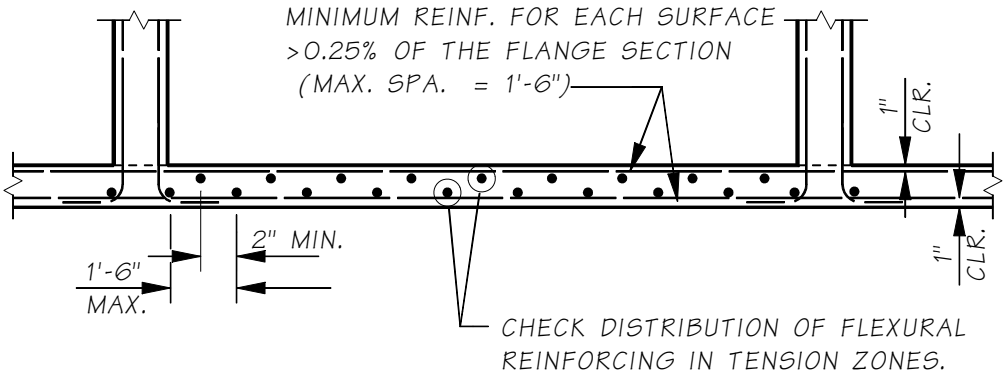

Bottom Slab Reinforcement Near Center of Span
Figure 5.3.2-5

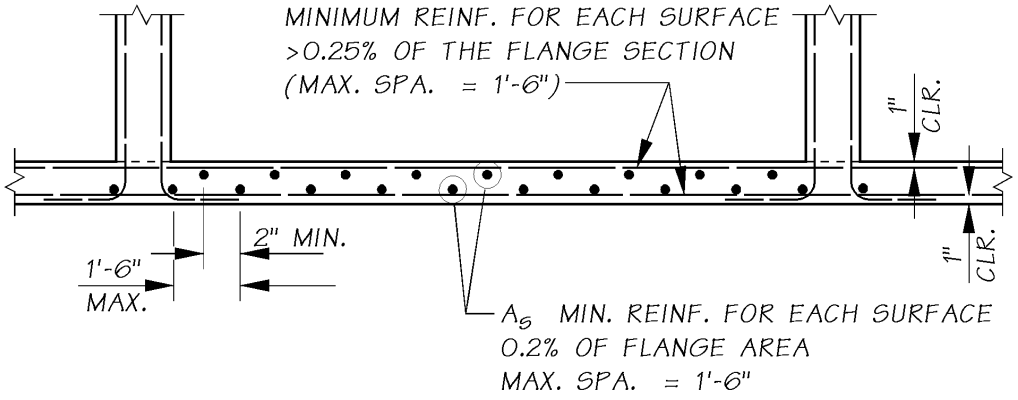

Bottom Slab Reinforcement Near Intermediate Pier
Figure 5.3.2-6

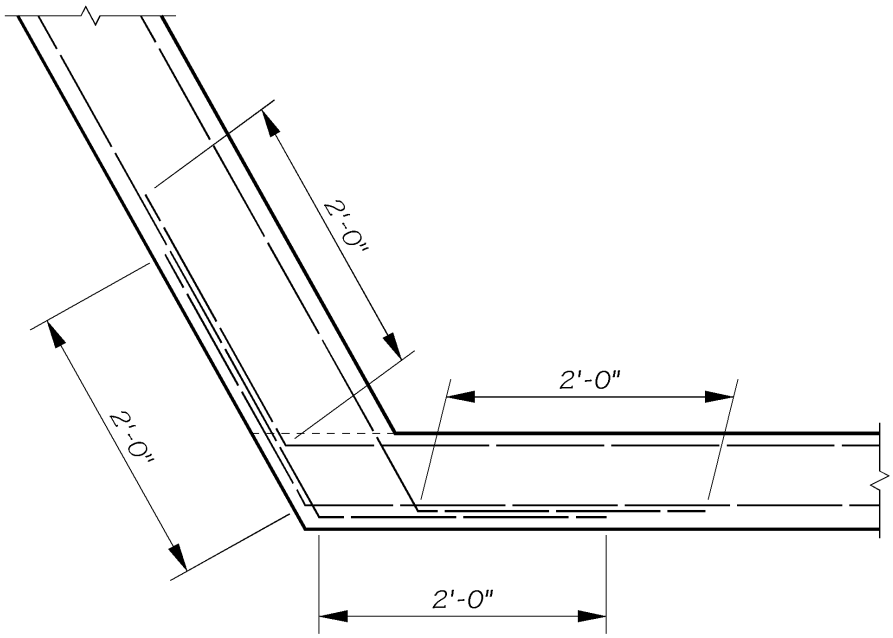

SLOPED WEB

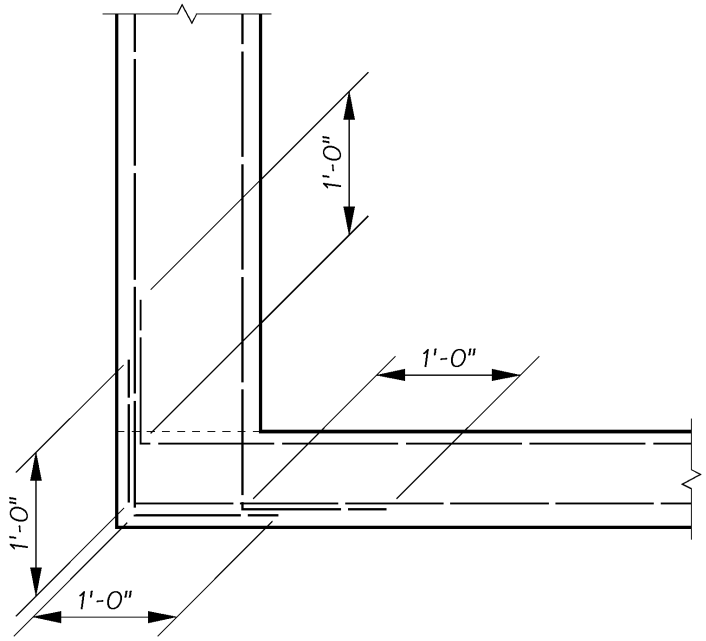

VERTICAL WEB

Web Reinforcement
Figure 5.3.2-7

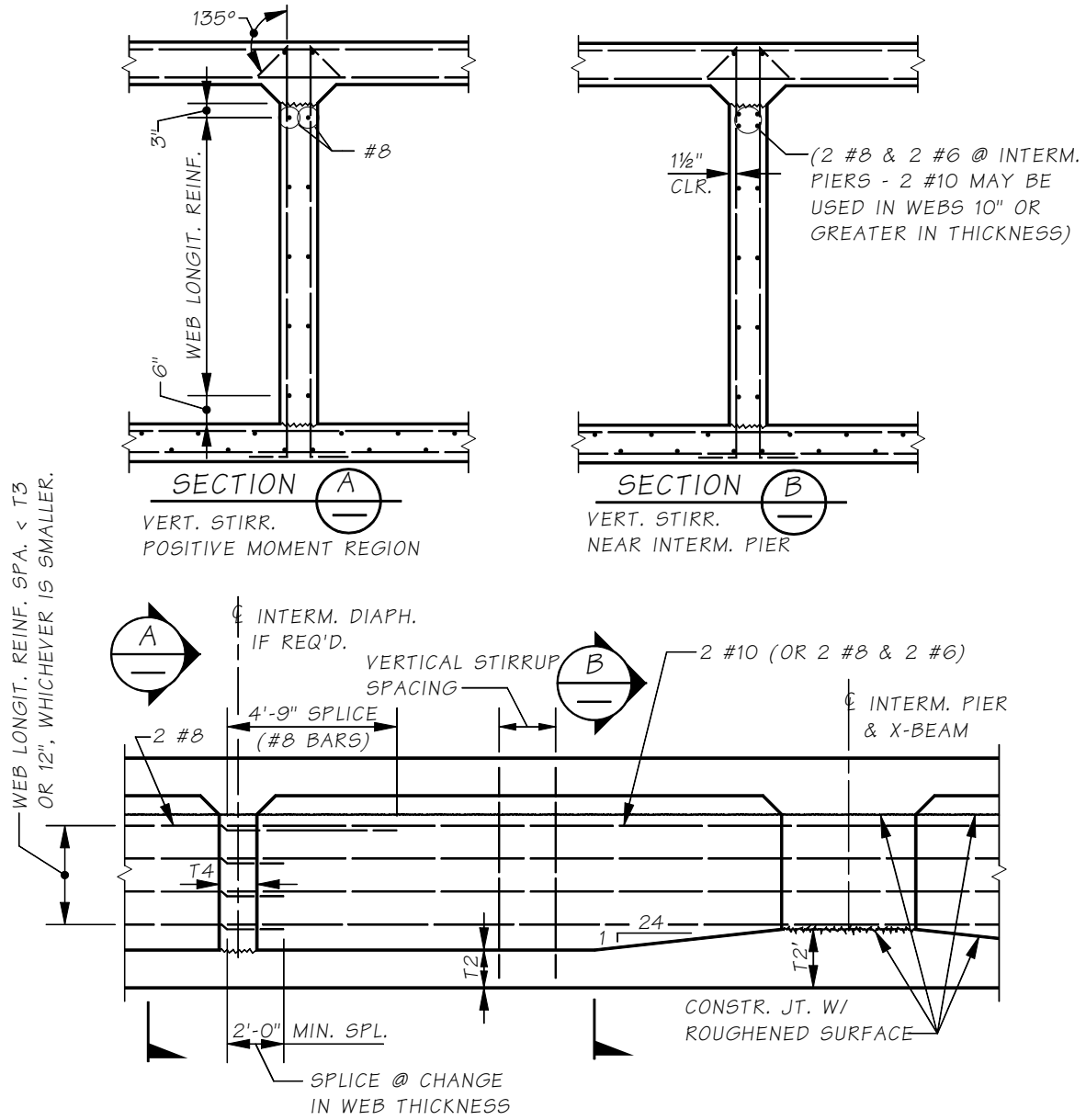

PARTIAL LONGITUDINAL GIRDER SECTION

Use 2 #10 (2 #8 & 2 #6 for 10" or less webs) at dead load negative moment region near piers. The length of shall be extended 35 diameters beyond the dead load point of inflecton. Do not splice the #10 (#8) bars near the pier. The #6 bars may be spliced at center pier. Use 2 #8 only for the positive moment region.

Web Reinforcement Details
Figure 5.3.2-8

D. Intermediate Diaphragm

Intermediate diaphragms are not required for bridges on tangent alignment or curved bridges with an inside radius of 800 feet or greater.

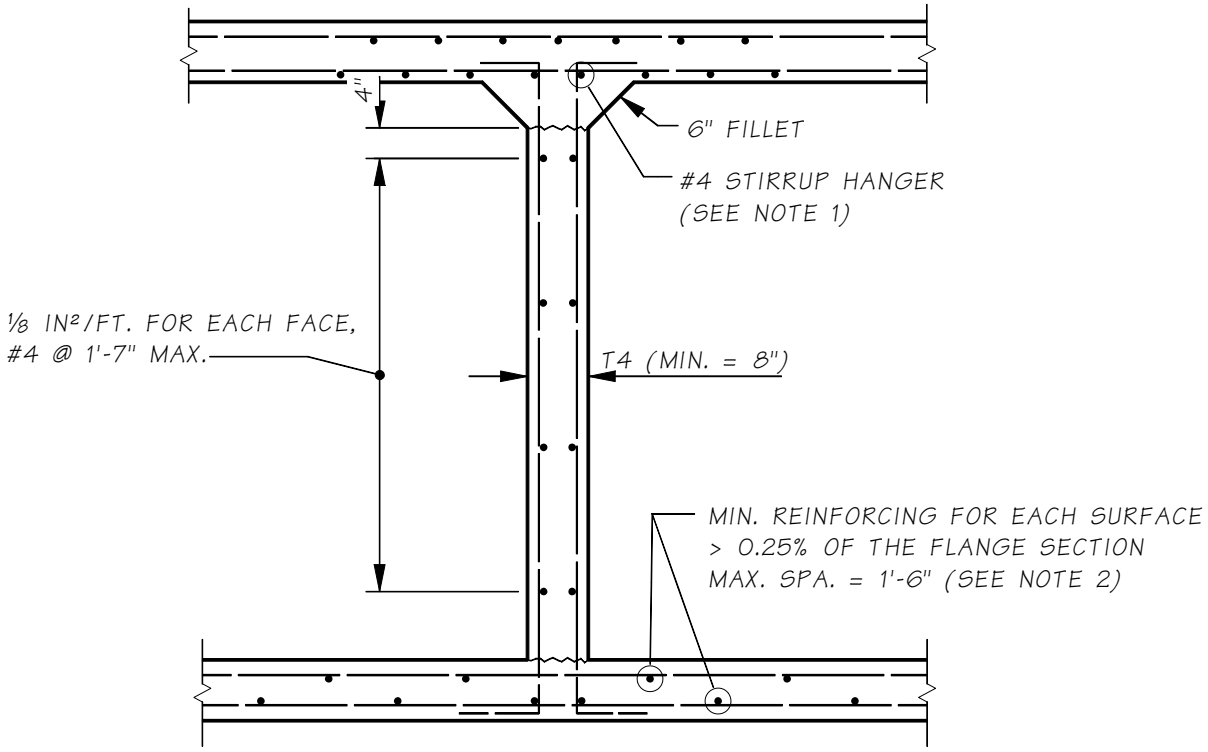

1. *Stirrup hanger must be placed above longitudinal steel when diaphragm is skewed and slab reinforcement is placed normal to center of roadway. (Caution: Watch for the clearance with longitudinal steel.)*

2. *The reinforcement should have at least one splice to facilitate proper bar placement.*

Web Reinforcement Details
Figure 5.3.2-9

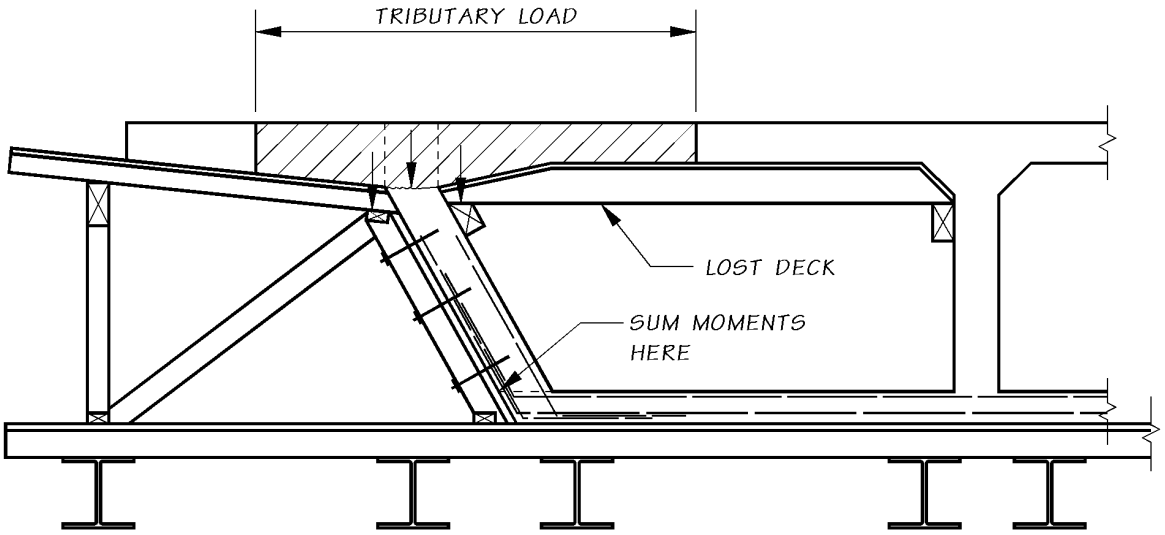

Notes:

1. The diagonal brace supports web forms during web pour. After cure, the web is stiffer than the brace, and the web attracts load from subsequent concrete placements.
2. The tributary load includes half the overhang because the outer web form remains tied to and transfers load to the web which is considerably stiffer than the formwork.
3. Increase web reinforcement for Locked-in Construction Load due to top slab forming for sloped web box girders.

Typical Top Slab Forming for Sloped Web Box Girder

Figure 5.3.2-10

5.3.3 Crossbeam

A. General

Crossbeam shall be designed in accordance with the requirements of strength limit state design of AASHTO LRFD Specifications and shall satisfy the serviceability requirements for crack control.

B. Basic Geometry

For aesthetic purposes, it is preferable to keep the crossbeam within the superstructure so that the bottom slab of the entire bridge is a continuous plane surface interrupted only by the columns. Although the depth of the crossbeam may be limited, the width can be made as wide as necessary to satisfy design requirements. Normally, it varies from 3 feet to the depth of box but is not less than the column size plus 1'-0" to allow placement of the column reinforcement as shown in see Figures 5.3.3-1 and 5.3.3-2.

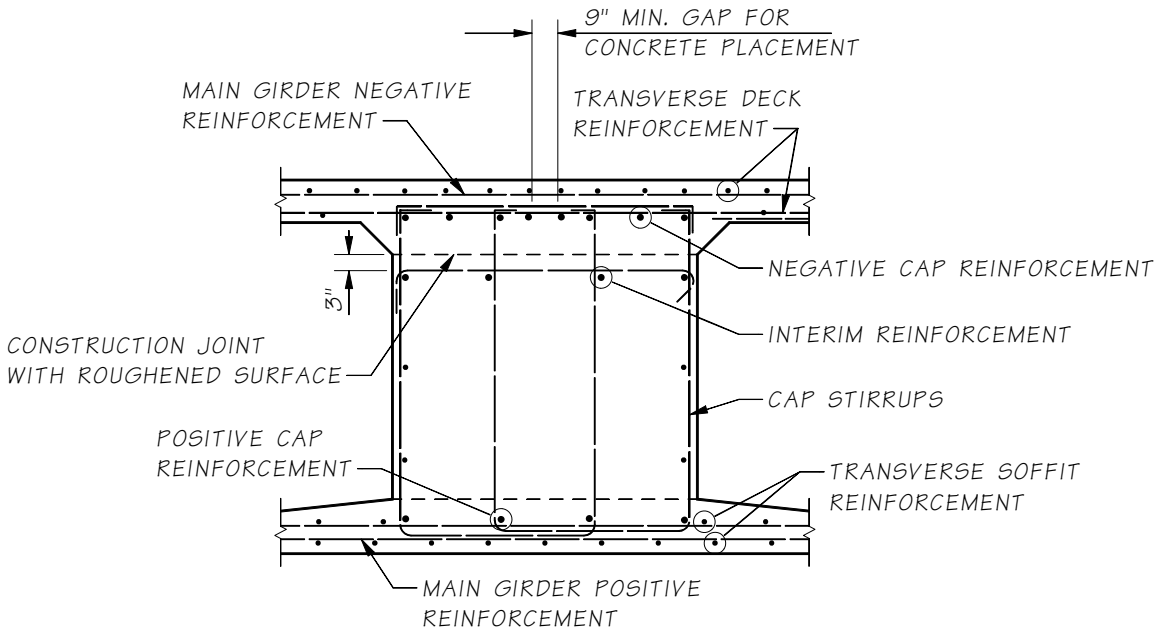

Crossbeam Top Reinforcement for Skew Angle ≤ 25°
Figure 5.3.3-1

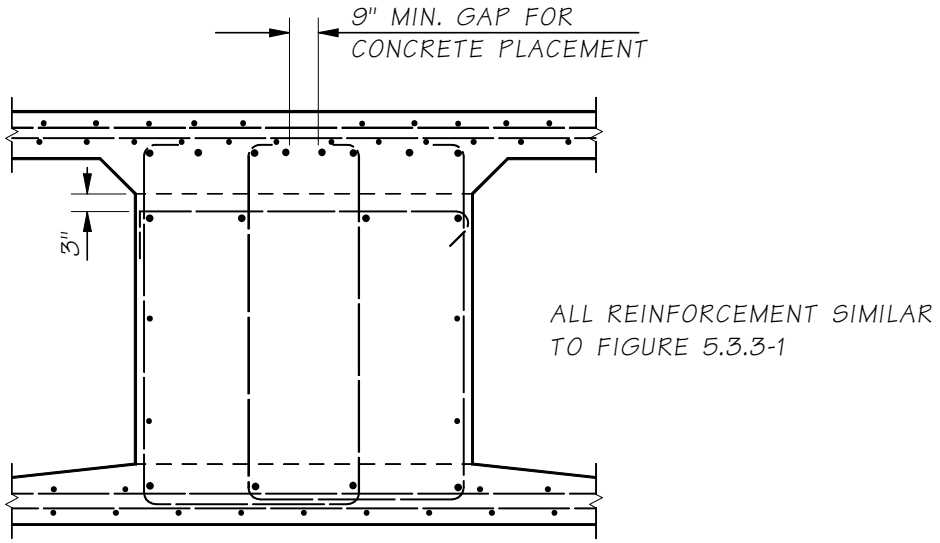

Crossbeam Top Reinforcement for Skew Angle > 25°
Figure 5.3.3-2

Crossbeams on box girder type of construction shall be designed as a T beam utilizing the flange in compression, assuming the deck slab acts as a flange for positive moment and bottom slab a flange for negative moment. The effective overhang of the flange on a cantilever beam shall be limited to six times the flange thickness.

The bottom slab thickness is frequently increased near the crossbeam in order to keep the main box girder compressive stresses to a desirable level for negative girder moments as shown in Figures 5.3.3-1 and 5.3.3-2. This bottom slab flare also helps resist negative crossbeam moments. Consideration should be given to flaring the bottom slab at the crossbeam for designing the cap even if it is not required for resisting main girder moments.

C. Loads

For concrete box girders the superstructure dead load shall be considered as uniformly distributed over the crossbeam. For concrete box girders the live load shall be considered as the truck load directly to the crossbeam from the wheel axles. Truck axles shall be moved transversely over the crossbeam to obtain the maximum design forces for the crossbeam and supporting columns.

D. Reinforcement Design and Details

The crossbeam section consists of rectangular section with overhanging deck and bottom slab if applicable. The effective width of the crossbeam flange overhang shall be taken as the lesser of:

- 6 times slab thickness,
- $^1/_{10}$ of column spacing, or
- $^1/_{20}$ of crossbeam cantilever as shown in Figure 5.3.3-3.

The rectangular section of the crossbeam shall have a minimum width of column dimension plus 6 inches.

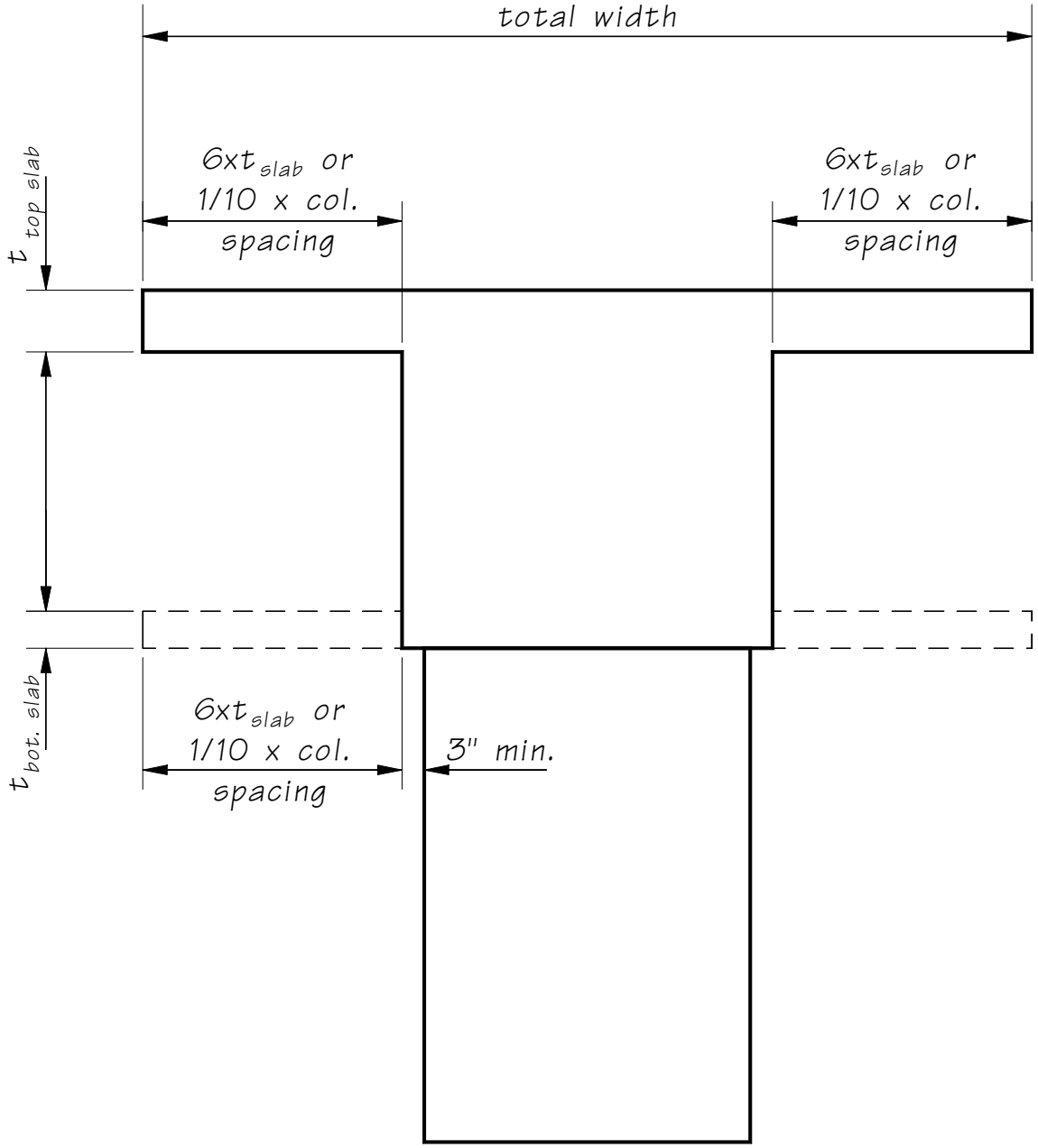

Effective Width of Crossbeam
Figure 5.3.3-3

Crossbeam is usually cast to the fillet below the top slab. To avoid cracking of concrete on top of the crossbeam, construction reinforcement shall be provided at approximately 3 inches below the construction joint. The design moment for construction reinforcement shall be the factored negative dead load moment due to the weight of crossbeam and adjacent 10 feet of superstructure each side. The total amount of construction reinforcement shall be adequate to develop an ultimate moment at the critical section at least 1.2 times the cracking moment M_{cr}.

Special attention should be given to the details to ensure that the column and crossbeam reinforcement will not interfere with each other. This can be a problem especially when round columns with a great number of vertical bars must be meshed with a considerable amount of positive crossbeam reinforcement passing over the columns.

1. Top Reinforcement

   Provide negative moment reinforcement at the ¼ point of the square or equivalent square columns.

   a. When Skew Angle < 25°

      If the bridge is tangent or slightly skewed deck transverse reinforcement is normal or radial to centerline bridge, the negative cap reinforcement can be placed either in contact with top deck negative reinforcement or directly under the main deck reinforcement (see Figure 5.3.3-1). Reinforcement must be epoxy coated if the location of reinforcement is less than 4″ below top of deck.

   b. When Skewed Angle > 25°

      When the structure is on a greater skew and the deck steel is normal or radial to the longitudinal centerline of the bridge, the negative cap reinforcement should be lowered to below the main deck reinforcement (see Figure 5.3.3-2).

   c. To avoid cracking of concrete, interim reinforcements are required below the construction joint in diaphragms and crossbeams.

      The interim reinforcements shall develop a moment capacity of 1.2 M_{cr} where Mcr may be given as:

$$M_{cr} = \frac{f_r I_g}{y_t} \tag{5.3.3-1}$$

$$f_r = 7.5\sqrt{f'_c} \tag{5.3.3-2}$$

$$M_{cr} = 1.25bh^2\sqrt{f'_c} \tag{5.3.3-3}$$

$$M_n = 1.2M_{cr} = 1.5bh^2\sqrt{f'_c} \tag{5.3.3-4}$$

$$A_S = \frac{0.85f'c(b)}{fy}\left(d - \sqrt{d^2 - \frac{31.3725M_u}{f'c(b)}}\right) \tag{5.3.3-5}$$

2. Skin Reinforcement

   If the depth of crossbeam exceeds 3 feet, longitudinal skin reinforcement shall be provided on both sides of the member for a distance of d/2 nearest the flexural reinforcement. The area of skin reinforcement per foot of height on each side shall be: $A_{sk} >= 0.012$ (d-30)

   The maximum spacing of skin reinforcement shall not exceed d/6 or 12 inches whichever is less.

5.3.4 End Diaphragm

A. Basic Geometry

Bearings at the end diaphragms are usually located under the girder stems and transfer loads directly to the pier as shown in Figure 5.3.4-1. In this case, the diaphragm width should be equal to or greater than bearing grout pads as shown Figure 5.3.4-2.

Designer should provide access space for maintenance and inspection of bearings.

Allowance should be provided to remove and replace the bearings. Lift point locations, jack capacity, number of jacks, and maximum permitted lift should be shown in the plan details.

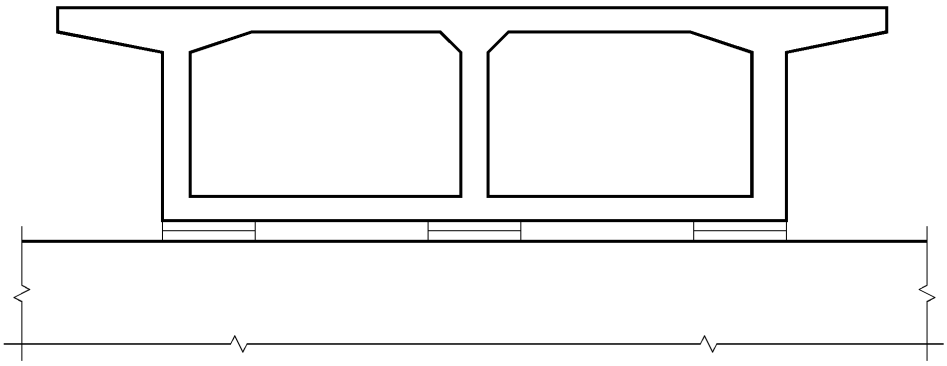

Bearing Locations, Lift Points, Jack Capacity, and Maximum Lift Permitted at End Diaphragm
Figure 5.3.4-1

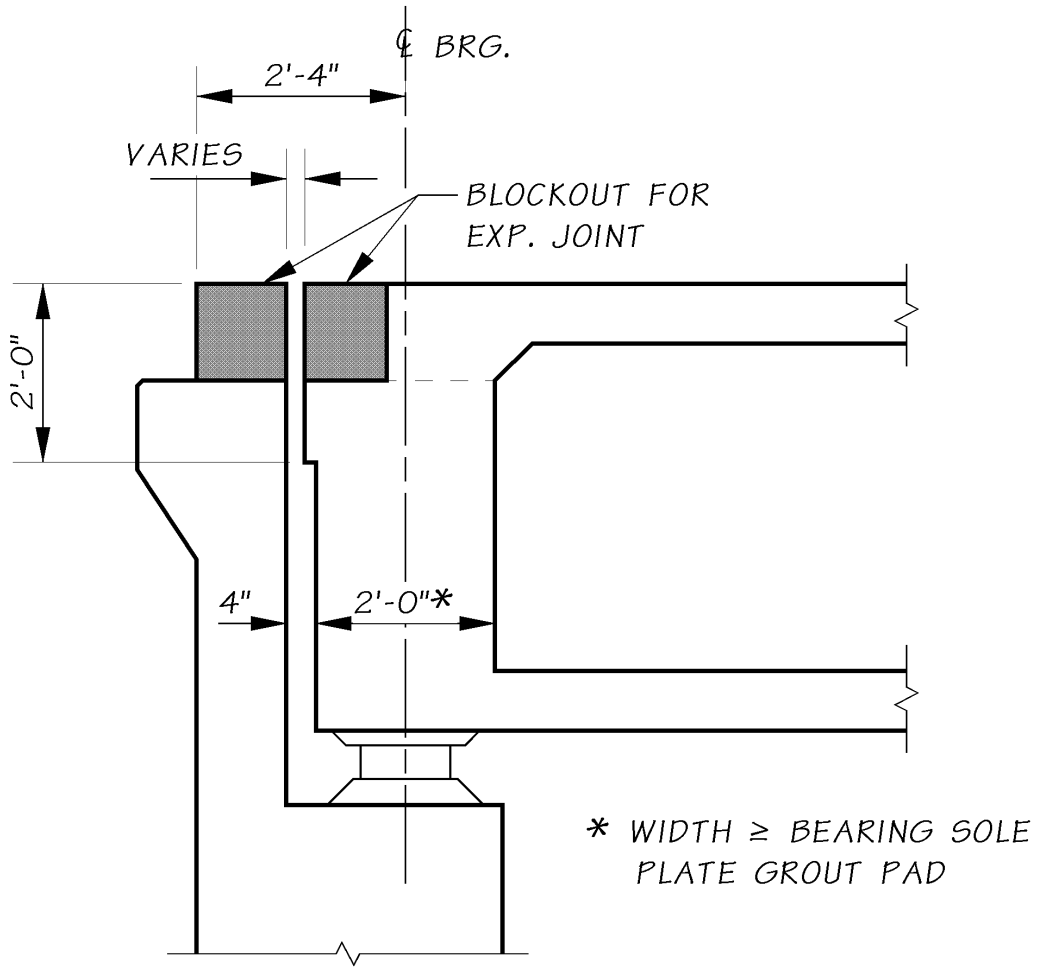

L-shape Abutment End Diaphragm
Figure 5.3.4-2

The end diaphragms should be wide enough to provide adequate reinforcing embedment length. When the structure is on a skew greater than 25 degrees and the deck steel is normal or radial to the center of the bridge, the width should be enough to accommodate the embedment length of the reinforcement.

The most commonly used type of end diaphragm is shown in Figure 5.3.4-3. The dimensions shown here are used as a guideline and should be modified if necessary. This end diaphragm is used with a stub abutment and overhangs the stub abutment. It is used on bridges with an overall or out-to-out length less than 400 feet. If the overall length exceeds 400 feet, an L-shape abutment should be used.

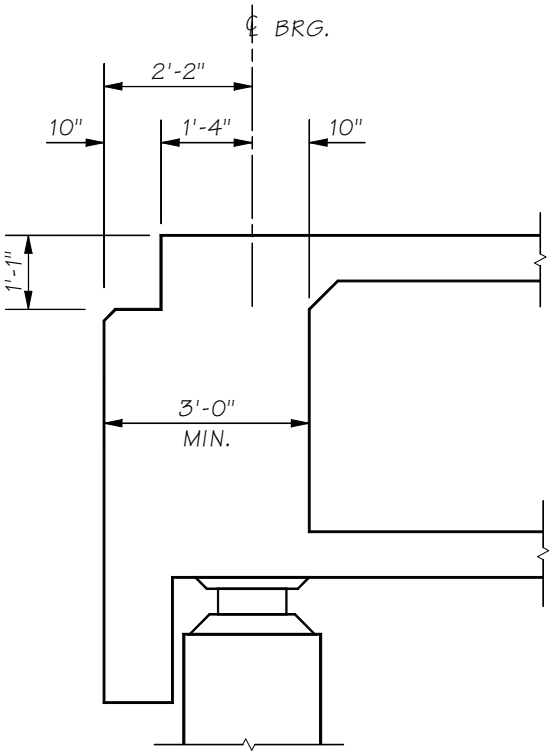

End Diaphragm With Stub Abutment
Figure 5.3.4-3

B. Reinforcing Steel Details

Typical reinforcement details for an end diaphragm are shown in Figure 5.3.4-4.

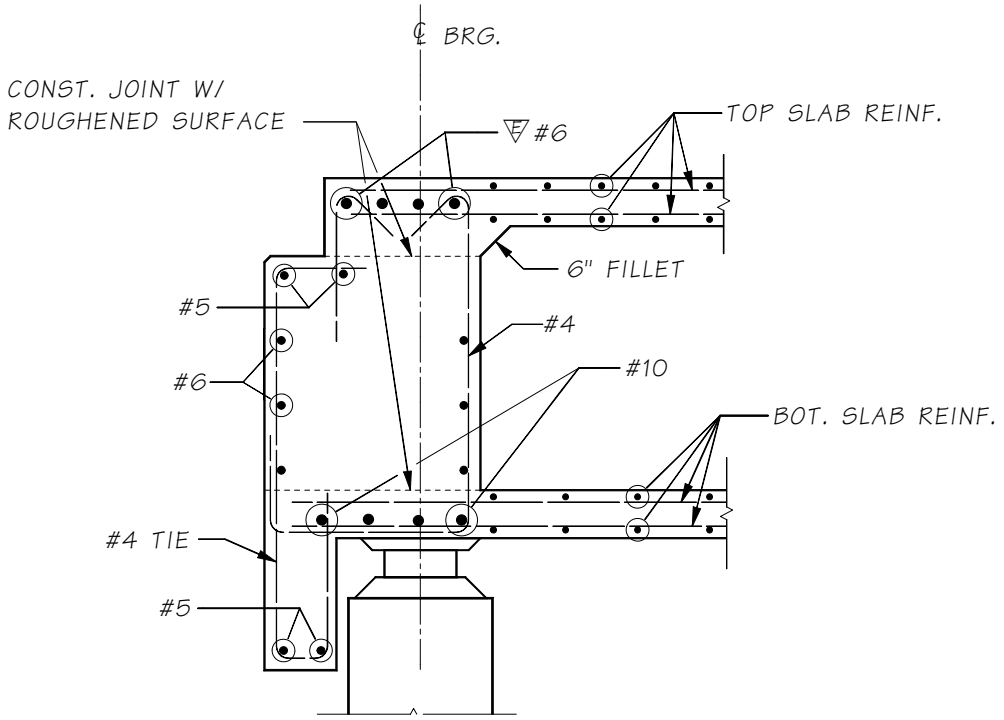

Typical End Diaphragm Reinforcement
Figure 5.3.4-4

5.3.5 Dead Load Deflection and Camber

Camber is the adjustment made to the vertical alignment to compensate for the anticipated dead load deflection and the long-term deflection caused by shrinkage and creep. Estimating long-term deflection and camber for reinforced concrete flexural members should be based on the creep coefficient given in section 5.1.1E. See table 5.3.5-1 for long-term camber multipliers.

	Multiplier Coefficient
Girder Adjacent to Existing/Stage Construction	
Deflection (downward) — apply to the elastic deflection due to the weight of member	1.90
Deflection (downward) — apply to the elastic deflection due to superimposed dead load only	2.20
Girder Away From Existing/Stage Construction	
Deflection (downward) — apply to the elastic deflection due to the weight of member	2.70
Deflection (downward) — apply to the elastic deflection due to superimposed dead load only	3.00

Long-term Camber Multipliers
Table 5.3.5-1

In addition to dead load deflection, forms and falsework tend to settle and compress under the weight of freshly placed concrete. The amount of this take-up is dependent upon the type and design of the falsework, workmanship, type and quality of materials and support conditions. The camber should be modified to account for anticipated take-up in the falsework.

5.3.6 Thermal Effects

Concrete box girder bridges are subjected to stresses and/or movements resulting from temperature variation. Temperature effects result from time-dependent variations in the effective bridge temperature and from temperature differentials within the bridge superstructure.

A. Effective Bridge Temperature and Movement

Fluctuation in effective bridge temperature causes expansion and contraction of the structure. Proper temperature expansion provisions are essential in order to ensure that the structure will not be damaged by thermal movements. These movements, in turn, induce stresses in supporting elements such as columns or piers, and result in horizontal movement of the expansion joints and bearings. For more details, see Chapter 8.

B. Differential Temperature

Although time-dependent variations in the effective temperature have caused problems in both reinforced and prestressed concrete bridges, detrimental effects caused by temperature differential within the superstructure have occurred only in prestressed bridges. Therefore, computation of stresses and movements resulting from the vertical temperature gradients is not included in this chapter. For more details, see AASHTO Guide Specifications, Thermal Effects on Concrete Bridge Superstructures dated 1989.

5.3.7 Hinges

Hinges are one of the weakest links of box girder bridges subject to earthquake forces and it is desirable to eliminate hinges or reduce the number of hinges. For more details on the design of hinges, see Section 5.4.

Designer should provide access space or pockets for maintenance and inspection of bearings.

Allowance should be provided to remove and replace the bearings. Lift point locations, maximum lift permitted, jack capacity, and number of jacks should be shown in the hinge plan details.

5.3.8 Utility Openings

A. Confined Spaces

A confined space is any place having a limited means of exit which is subject to the accumulation of toxic or flammable contaminants or an oxygen deficient environment. Confined spaces include but are not limited to pontoons, box girder bridges, storage tanks, ventilation or exhaust ducts, utility vaults, tunnels, pipelines, and open-topped spaces more than 4 feet in depth such as pits, tubes, vaults, and vessels. The designer should provide for the following:

- A sign with “Confined Space Authorized Personnel Only.”
- In the “Special Provisions Check List,” alert and/or indicate that a special provision might be needed to cover confined spaces.

B. Drain Holes

Drain holes should be placed in the bottom slab at the low point of each cell to drain curing water during construction and any rain water that leaks through the deck slab. Additional drains shall be provided as a safeguard against water accumulation in the cell (especially when waterlines are carried by the bridge). In some instances, drainage through the bottom slab is difficult and other means shall be provided (i.e., cells over large piers and where a sloping exterior web intersects a vertical web). In this case, a horizontal drain should be provided through the vertical web. Figure 5.3.8-1 shows drainage details for the bottom slab of concrete box girder bridges with steel wire screen.

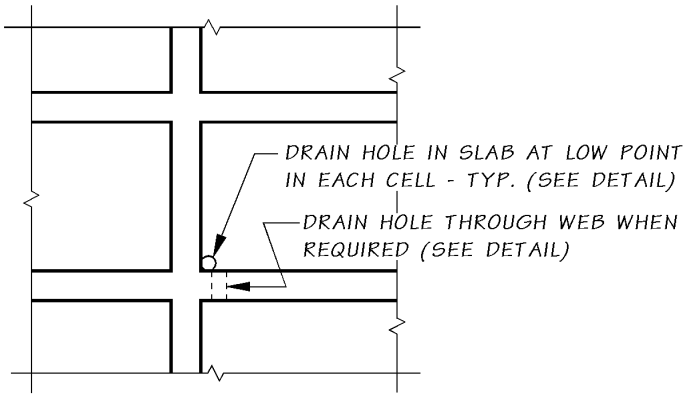

Drain Hole Details
Figure 5.3.8-1

C. Access Hatch and Air Vent Holes

Access hatches with doors should be placed in the bottom slab if necessary to inspect utilities inside cells (i.e., waterline, conduits, E.Q. restrainers, etc.). Figure 5.3.8-2 and 5.3.8-3 shows Access hatch details and Air Vent details respectively. Air vents are required when access holes are used.

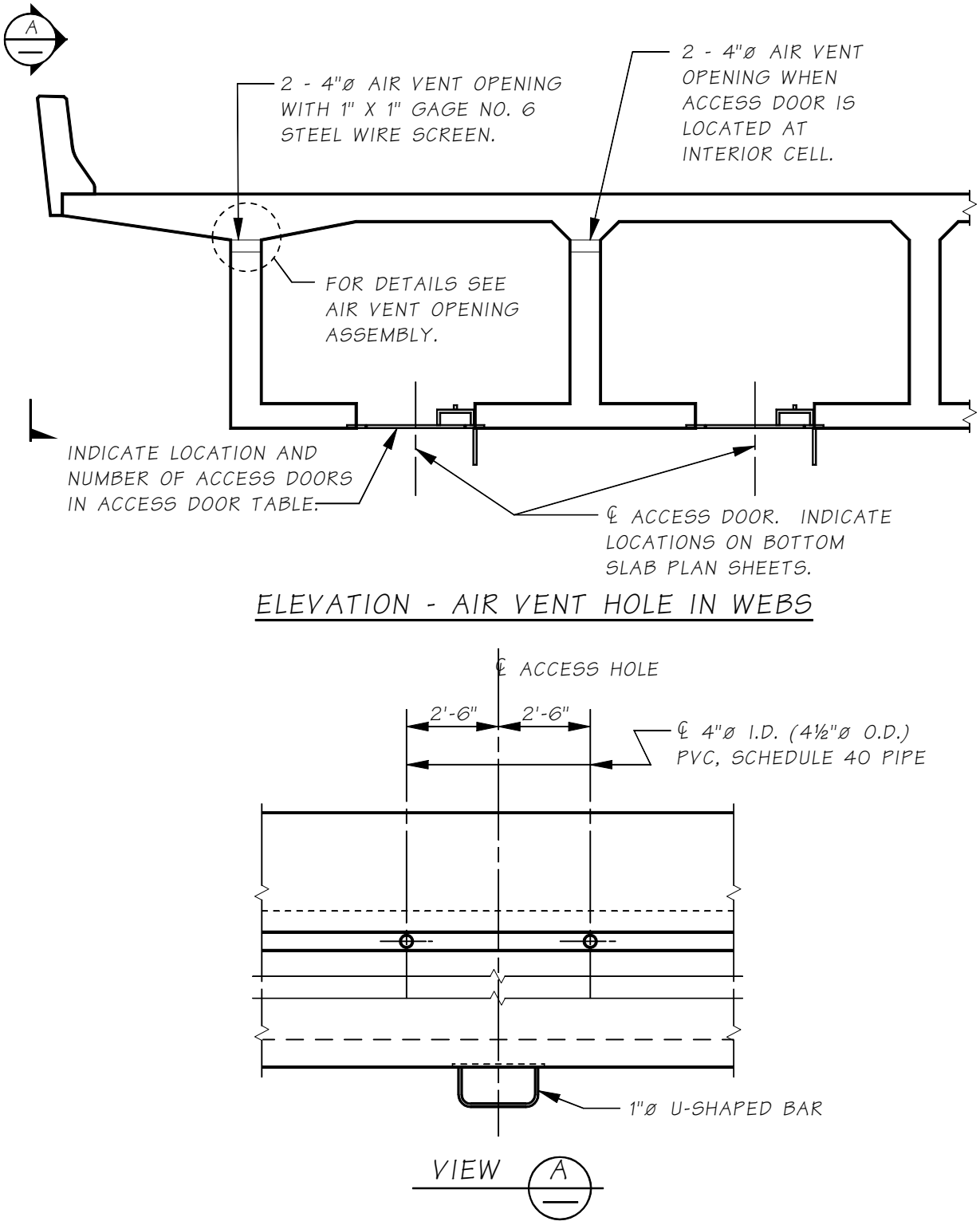

Access Hatch Details
Figure 5.3.8-2

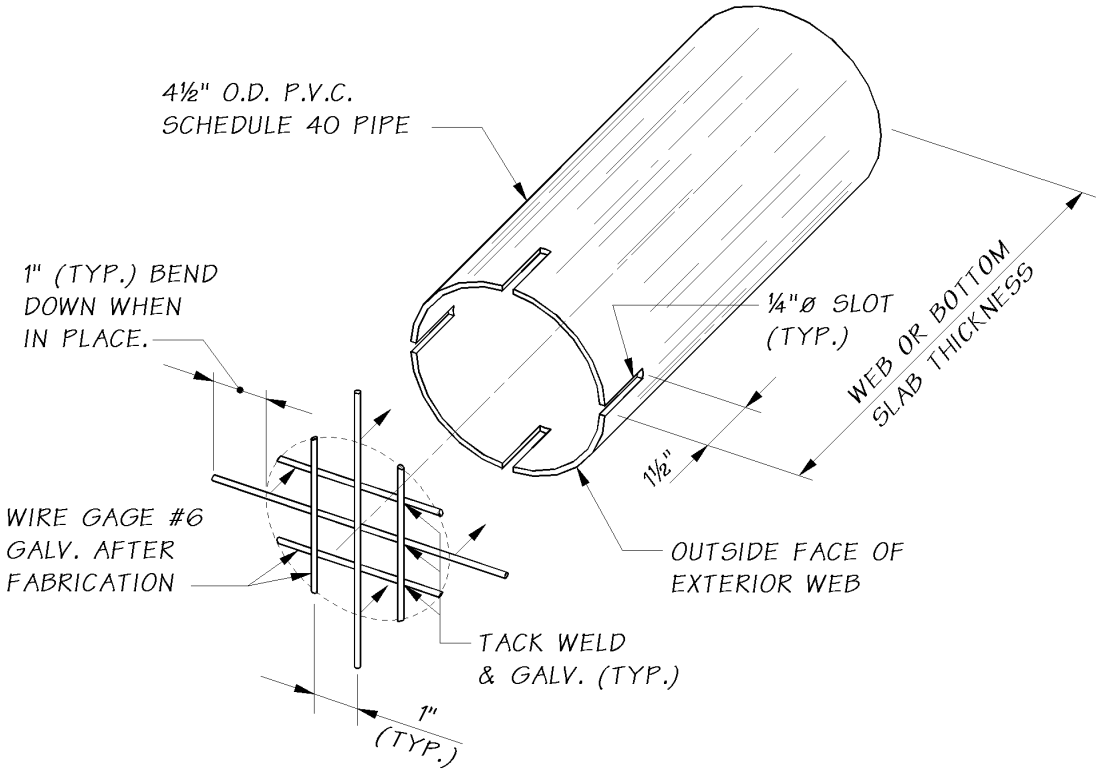

Air Vent Opening Detail
Figure 5.3.8-3

5.4 Hinges and Inverted T-Beam Pier Caps

Hinges and inverted T-beam pier caps require special design and detailing considerations. Continuous hinge shelves (both top and bottom projecting shelves) and continuous ledges of inverted T-beam pier caps, which support girders, is shown in Figure 5.4-1. In each case, vertical tensile forces (hanger tension) act at the intersection of the web and the horizontal hinge shelf or ledge. In the ledges of inverted T-beam pier caps, passage of live loads may also cause reversing torsional stresses which together with conventional longitudinal shear and bending produce complex stress distributions in the ledges[12, 13].

Figure 5.4-2 provide minimum shelf or ledge support lengths (N, L_1, and L_2) and provide positive longitudinal linkage (e.g., earthquake restrainers) in accordance with the current AASHTO LRFD Specifications for seismic design requirements. Design considerations for Beam Ledges, Inverted T beam and Hinges is given in AASHTO LRFD Section 5.13.2-5.

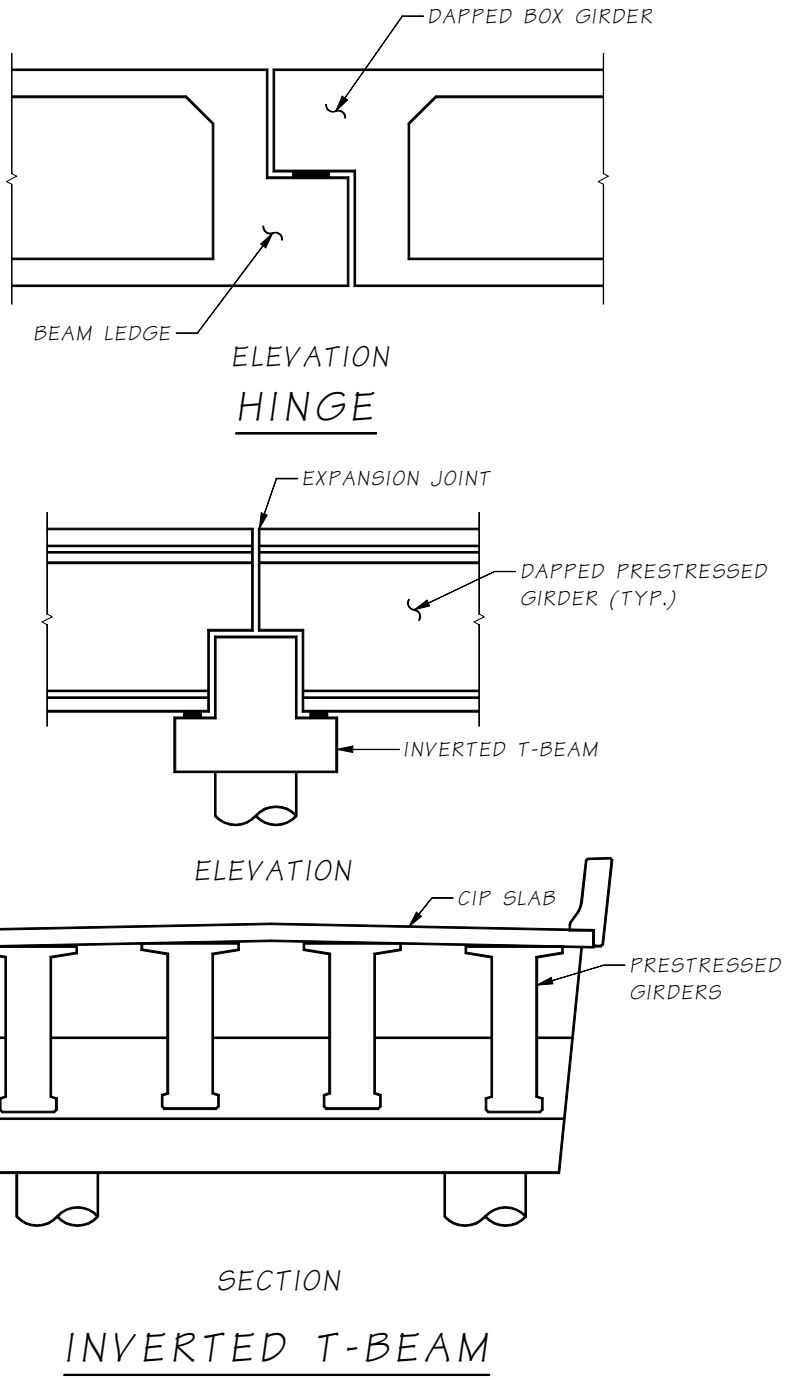

Hinge and Inverted T-beam pier Cap
Figure 5.4-1

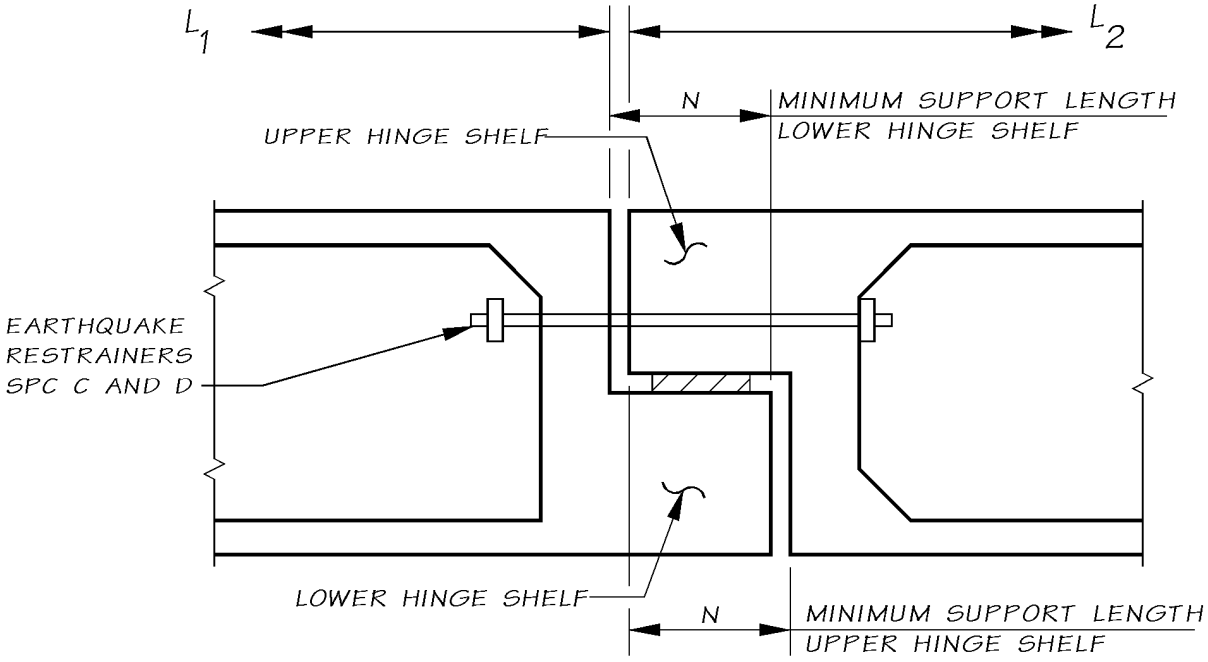

In-Span Hinge
Figure 5.4-2

5.5 Bridge Widenings

This section provides general guidance for the design of bridge widenings. Included are additions to the substructure and the superstructure of reinforced concrete box girder, flat slab, T-beam, and precast prestressed girder bridges. For additional information, see ACI Committee Report, Guide for Widening Highway Bridges[15].

5.5.1 Review of Existing Structures

A. General

Obtain the following documents from existing records for preliminary review, design, and plan preparation:

1. Copy of "As-Built" contract plans from in Bridge Records, Office of Bridges and Structures.
2. Copy of original contract plans and special provisions, which can be obtained from Engineering Records (Plans Vault), Records Control. These will not include the "As-Built" plans, since they are made prior to receiving the "As-Built" plans from the Project Engineer.
3. Check with the Bridge Preservation Unit for records of any unusual movements/rotations and other structural information.
4. Original design calculations, which are stored in State Archives and can be retrieved by Bridge Records personnel.
5. Current field data on Supplemental Site Data Form (including current deck elevations at interface of widening and existing deck, as well as cross slopes), are obtained from Region. Current field measurements of existing pier crossbeam locations are recommended so that new prestressed girders are not fabricated too short or too long. This is particularly important if piers have been constructed with different skews.
6. Original and current Foundation Reports from the Materials Lab or from the Plans Vault.
7. Change Order files to the original bridge contract in Records Control Unit.

B. Original Contract Plans and Special Provisions

Location and size of reinforcement, member sizes and geometry, location of construction joints, details, allowable design soil pressure, and test hole data are given on the plans. Original contract plans can be more legible than the microfilm copies.

The special provisions may include pertinent information that is not covered on the plans or in the LRFD Specifications.

C. Original Calculations

The original calculations should be reviewed for any "special assumptions" or office criteria used in the original design. The actual stresses in the structural members, which will be affected by the widening, should be reviewed. This may affect the structure type selected for the widening.

D. Final Records

For major widening/renovation projects, the Final Records should be reviewed particularly for information about the existing foundations and piles. Sometimes the piles indicated on the original plans were omitted, revised, or required preboring. Final Records are available from Records Control or Bridge Records (Final Records on some older bridges may be in storage at the Materials Lab).

5.5.2 Analysis and Design Criteria

A. General

Each widening represents a unique situation and construction operations may vary between widening projects. The guidelines in this section are based on years of WSDOT design experience with bridge widenings.

1. Appearance

   The widening of a structure should be accomplished in such a manner that the existing structure does not look "added on to." When this is not possible, consideration should be given to enclosure walls, cover panels, paint, or other aesthetic treatments. Where possible and appropriate, the structure's appearance should be improved by the widening.

2. Materials

   Preferably, materials used in the construction of the widening shall have the same thermal and elastic properties as the materials used in the construction of the original structure.

3. Load Distribution and Construction Sequence

   The members of the widening should be proportioned to provide similar longitudinal and transverse load distribution characteristics as the existing structure. Normally this can be achieved by using the same cross sections and member lengths that were used in the existing structure.

   The construction sequence and degree of interaction between the widening and the existing structure, after completion, shall be fully considered in determining the distribution of the dead load for design of the widening and stress checks for the existing structure. The distribution of live load shall be in accordance with the AASHTO LRFD specifications. Where precast-prestressed girders are used to widen an existing cast-in-place concrete box girder or T-beam bridge, the live load distribution factor for interior girder(s) shall be per AASHTO LRFD Specifications.

   The construction sequence or stage construction should be clearly shown in the plans to avoid confusion and misinterpretation during construction. A typical construction sequence may involve placing the deck concrete, removing the falsework, placing the concrete for the closure strip, and placing the concrete for the traffic barrier. Indicate in the plans a suggested stage construction plan to avoid misinterpretation.

4. Specifications

   The design of the widening shall conform to the current AASHTO LRFD Specifications and the state of Washington's Standard Specifications for Road, Bridge, and Municipal Construction.

   The method of design for the widening shall be by strength design even though the original design may have been by service load design.

5. Geometrical Constraints

   The overall appearance and geometrical dimensions of the superstructure and columns of the widening should be the same or as close as possible to those of the existing structure. This is to ensure that the widening will have the same appearance and similar structural stiffness as the original structure.

6. Strength of Concrete

   For concrete structures located in rural areas or where the volume of concrete is less than 30 cubic yards, use Class 4000 (f'_c = 4.0 ksi) and Grade 60 reinforcement. For projects located in urban areas and having a volume of concrete greater than 30 cubic yards, Class 5000 may be specified only if necessary to meet structural requirements and if facilities are available. Concrete with a greater strength may be used, if needed, with consultation and approval of the Bridge Design Engineer.

7. Overlay

   It should be established at the preliminary plan stage if an overlay is required as part of the widening.

8. Strength of the Existing Structure

   A review of the strength of the main members of the existing structure shall be made for construction conditions utilizing AASHTO LRFD Load Factors.

   A check of the existing main members after attachment of the widening shall be made for the final design loading condition.

   If the existing structural elements do not have adequate strength, consult your supervisor or in the case of consultants, contact the Consultant Liaison Engineer for appropriate guidance.

   If significant demolition is required on the existing bridge, consideration should be given to requesting concrete strength testing for the existing bridge and including this information in the contract documents.

9. Special Considerations

   a. For structures that were originally designed for HS-20 loading, HL-93 shall be used to design the widening. For structures that were originally designed for less than HS-20, consideration should be given to replacing the structure instead of widening it.

   b. Where large cambers are expected, a longitudinal joint between the existing structure and the widening may be considered. Longitudinal joints, if used, should be located out of traveled lanes or beneath median barriers to eliminate potentially hazardous vehicle control problems.

   c. The WSDOT Standard Specifications do not permit falsework to be supported from the existing structure unless the Plans and Specifications state otherwise. This requirement eliminates the transmission of vibration from the existing structure to the widening during construction. The existing structure may still be in service.

   d. For narrow widenings where the Plans and Specifications require that the falsework be supported from the original structure (e.g., there are no additional girders, columns, crossbeams, or closure strips), there should be no external rigid supports such as posts or falsework from the ground. Supports from the ground do not permit the widening to deflect with the existing structure when traffic is on the existing structure. This causes the uncured concrete of the widening to crack where it joins the existing structure. Differential dead load deflection during construction should be given consideration.

   e. Precast members may be used to widen existing cast-in-place structures. This method is useful when the horizontal or vertical clearances during construction are insufficient to build cast-in-place members.

   f. The alignment for diaphragms for the widening shall generally coincide with the existing diaphragms.

g. When using battered piles, estimate the pile tip elevations and ensure that they will have ample clearance from all existing piles, utilities, or other obstructions. Also check that there is sufficient clearance between the existing structure and the pile driving equipment.

B. Seismic Design Criteria for Bridge Widenings

1. Adequacy of Existing Structure

Early in the project, determine whether earthquake loading poses any problems for the structural adequacy of the existing structure (e.g., original unwidened structure). The amount of reinforcement and structural detailing of older structures may not meet the current AASHTO LRFD seismic design requirements. It is important that these deficiencies be determined as soon as possible so that remedial/retrofitting measures can be evaluated. It should be noted that for some structures, because of deterioration and/or inadequate details, the widening may not be structurally or economically feasible. In this case, the Bridge Design Engineer should be consulted for possible structure replacement instead of proceeding with widening the structure.

2. Superstructure Widening Without Adding Substructure

No seismic analysis is necessary for this condition. Check the support shelf length required at all piers. Check the need for longitudinal earthquake restrainers and transverse earthquake stops.

3. Superstructure Widening by Adding Column(s) and Substructure

Use the AASHTO LRFD/BDM seismic design criteria with appropriate R factors to design and detail the new columns and footings for the maximum required capacity.

Analyze the widening and the existing structure as a combined unit.

If the existing structure is supported by single column piers, and is located in seismic zones 2, 3 or 4, the existing column should be retrofitted if it does not have adequate ductility to meet the current standards.

a. For existing bridges in Zone 2, 3, or 4 that are widened with additional columns and substructure, existing columns should be considered for retrofitting unless calculations or column details indicate that the existing columns have adequate ductility. Nonductile existing columns will likely not be able to carry vertical load if they experience the inelastic deflection that a new (ductile) column can tolerate.

b. Only the columns should be retrofitted. Retrofitting the foundations supporting existing columns is generally too expensive to consider for a widening project. Experience in past earthquakes in California has shown that bridges with columns (only) retrofitted have performed quite well.

c. Approval for retrofitting existing multiple column piers is subject to available funding and approval of the Bridge Design Engineer.

4. Other Criteria

a. If recommended in the foundation report, the superstructure widening with new substructure shall also be checked for differential settlement between the existing structure and the new widened structure. All elements of the structure shall be analyzed and detailed to account for this differential settlement especially on spread footing foundations.

Refer to Section 6.2.1.1.1 of the WSDOT Geotechnical Design Manual for further information on seismically-induced geologic hazards.

b. Check support width requirements; if there is a need for earthquake restrainers on the existing structure as well as the widened portion, they shall be included in the widening design.

c. The current AASHTO LRFD seismic design criteria may result in columns with more reinforcement and larger footings for the widened portion than those on the existing structure. If it is not possible to use larger footings because of limited space, an alternate design concept such as drilled shafts may be necessary.

d. When modifications are made near or on the existing bridge, be careful to isolate any added potential stiffening elements (such as traffic barrier against columns).

e. The relative stiffness of the new columns compared to the existing columns should be considered in the combined analysis. The typical column retrofit is steel jacketing with grouted annular space (between the existing column and the steel jacket).

f. When strutted columns (horizontal strut between existing columns) are encountered, remove the strut and analyze the existing columns for the new unbraced length and retrofit, if necessary.

C. Substructure

1. Selection of Foundation

a. The type of foundation to be used to support the widening should generally be the same as that of the existing structure unless otherwise recommended by the Geotechnical Engineer. The effects of possible differential settlement between the new and the existing foundations shall be considered.

b. Consider present bridge site conditions when determining new foundation locations. The conditions include: overhead clearance for pile driving equipment, horizontal clearance requirements, working room, pile batters, channel changes, utility locations, existing embankments, and other similar conditions.

2. Scour and Drift

Added piles and columns for widenings at water crossings may alter stream flow characteristics at the bridge site. This may result in pier scouring to a greater depth than experienced with the existing configuration. Added substructure elements may also increase the possibility of trapping drift. The Hydraulics Engineer should be consulted concerning potential problems related to scour and drift on all widenings at water crossings.

D. Superstructure

1. Camber

Accurate prediction of dead load deflection is more important for widenings than for new bridges, since it is essential that the deck grades match[12].

To obtain a smooth transition in transverse direction of the bridge deck, the camber of the girder adjacent to the existing structure shall be adjusted for the difference in camber between new and existing structure. A linear interpolation may be used to adjust the camber of the girders located away from the existing structure. The multipliers for estimating camber of new structure may be taken as shown in Table 5.3.5-1.

2. Closure Strip

   Except for narrow deck slab widenings a closure strip is required for all cast-in-place widenings. The width shall be the minimum required to accommodate the necessary reinforcement and for form removal. Reinforcement, which extends through the closure strip shall be investigated. Shear shall be transferred across the closure strip by shear friction and/or shear keys.

   All falsework supporting the widening shall be released and formwork supporting the closure strip shall be supported from the existing and newly widened structures prior to placing concrete in the closure strip. Because of deck slab cracking experienced in widened concrete decks, closure strips are required unless the mid-span dead load camber is ½ inch or less.

3. Stress Levels and Deflections in Existing Structures

   Caution is necessary in determining the cumulative stress levels, deflections, and the need for shoring in existing structural members during rehabilitation projects.

   For example, a T-beam bridge was originally constructed on falsework and the falsework was released after the slab concrete gained strength. As part of a major rehabilitation project, the bridge was closed to traffic and the entire slab was removed and replaced without shoring. Without the slab, the stems behave as rectangular sections with a reduced depth and width. The existing stem reinforcement was not originally designed to support the weight of the slab without shoring. After the new slab was placed, wide cracks from the bottom of the stem opened, indicating that the reinforcement was overstressed. This overstress resulted in a lower load rating for the newly rehabilitated bridge. This example shows the need to shore up the remaining T-beam stems prior to placing the new slab so that excessive deflections do not occur and overstress in the existing reinforcing steel is prevented.

   It is necessary to understand how the original structure was constructed, how the rehabilitated structure is to be constructed, and the cumulative stress levels and deflections in the structure from the time of original construction through rehabilitation.

E. Stability of Widening

   For relatively narrow box girder and T-beam widenings, symmetry about the vertical axis should be maintained because lateral loads are critical during construction. When symmetry is not possible, use pile cap connections, lateral connections, or special falsework. A minimum of two webs is generally recommended for box girder widenings. For T-beam widenings that require only one additional web, the web should be centered at the axis of symmetry of the slab. Often the width of the closure strip can be adjusted to accomplish this.

5.5.3 Removing Portions of the Existing Structure

Portions of the existing structure to be removed shall be clearly indicated on the plans. Where a clean break line is required, a ¾″ deep saw cut shall be specified for a slab with normal wear and a ½″ deep saw cut for worn roadway slabs. In no case, however, shall the saw blade cut or nick the main transverse top slab reinforcement. The special provisions shall state that care will be taken not to damage any reinforcement which is to be saved. Hydromilling is preferred where reinforcing bar cover is shallow and can effectively remove delaminated decks because of the good depth control it offers. When greater depths of slab are to be removed, special consideration should be given to securing exposed reinforcing bars to prevent undue vibration and subsequent fatigue cracks from occurring in the reinforcing bars.

The current General Special Provisions should be reviewed for other specific requirements on slab removal.

Removal of any portion of the main structural members should be held to a minimum. Careful consideration shall be given to the construction conditions, particularly when the removal affects the existing frame system. In extreme situations, preloading by jacking is acceptable to control stresses and deflections during the various stages of removal and construction. Removal of the main longitudinal slab reinforcement should be kept to a minimum. See "Slab Removal Detail" Figure 5.5.4-1 for the limiting case for the maximum allowable removal.

The plans should include a note that critical dimensions and elevations are to be verified in the field prior to the fabrication of precast units or expansion joint assemblies.

In cases where an existing sidewalk is to be removed but the supporting slab under the sidewalk is to be retained, Region personnel should check the feasibility of removing the sidewalk. Prior to design, Region personnel should make recommendations on acceptable removal methods and required construction equipment. The plans and specifications should then be prepared to accommodate these recommendations. This will ensure the constructibility of plan details and the adequacy of the specifications.

5.5.4 Attachment of Widening to Existing Structure

A. General

1. Lap and Mechanical Splices

   To attach a widening to an existing structure, the first choice is to utilize existing reinforcing bars by splicing new bars to existing. Lap splices or mechanical splices should be used. However, it may not always be possible to splice to existing reinforcing bars and spacing limitations may make it difficult to use mechanical splices.

2. Welding Reinforcement

   Existing reinforcing steel may not be readily weldable. Mechanical splices should be used wherever possible. If welding is the only feasible means, the chemistry of the reinforcing steel must be analyzed and acceptable welding procedures developed.

3. Drilling Into Existing Structure

   It may be necessary to drill holes and set dowels in epoxy resin in order to attach the widening to the existing structure.

   When drilling into heavily reinforced areas, chipping should be specified to expose the main reinforcing bars. If it is necessary to drill through reinforcing bars or if the holes are within 4 inches of an existing concrete edge, core drilling should be specified. Core drilled holes shall be roughened before resin is applied. If this is not done, a dried residue, which acts as a bond breaker and reduces the load capacity of the dowel, will remain. Generally, the drilled holes are ⅛ inch in diameter larger than the dowel diameter for #5 and smaller dowels and ¼ inch in diameter larger than the dowel diameter for #6 and larger dowels.

   In special applications requiring drilled holes greater than 1½ inch diameter or deeper than 2 feet, core drilling shall be specified. These holes should also be intentionally roughened prior to applying epoxy resin.

   Core drilled holes should have a minimum clearance of 3 inches from the edge of the concrete and 1-inch clearance from existing reinforcing bars in the existing structure. These clearances should be noted in the plans.

4. Dowelling Reinforcing Bars Into the Existing Structure

   a. Dowel bars shall be set with an approved epoxy resin. The existing structural element shall be checked for its adequacy to transmit the load transferred to it from the dowel bars.

   b. Dowel spacing and edge distance affect the allowable tensile dowel loads. Allowable tensile loads, dowel bar embedment, and drilled hole sizes for reinforcing bars (Grade 60) used as dowels and set with an approved epoxy resin are shown in Table 5.5.4-1. These values are based on an edge clearance greater than 3 inch, a dowel spacing greater than 6 inch, and are shown for both uncoated and epoxy coated dowels. Table 5.5.4-2 lists dowel embedment lengths when the dowel spacing is less than 6 inch. Note that in Table 5.5.4-2 the edge clearance is equal to or greater than 3 inch, because this is the minimum edge clearance for a drilled hole from a concrete edge.

      If it is not possible to obtain these embedment, such as for traffic railing dowels into existing deck slabs, the allowable load on the dowel shall be reduced by the ratio of the actual embedment divided by the required embedment.

   c. The embedment shown in Table 5.5.4-1 and Table 5.5.4-2 are based on dowels embedded in concrete with f'_c=4,000 psi.

Bar Size	Allowable Design Tensile Load, T*	Drill Hole Size	Required Embedment, Le	
			Uncoated	Epoxy Coated
	(kips)	(in)	(in)	(in)
#4	12.0	⅝	7	8
#5	18.6	¾	8	9
#6	26.4	1	9	10
#7	36.0	1⅛	11	12
#8	47.4	1¼	13	14.5
#9	60.0	1⅜	16	17½
#10	73.6	1½	20	22
#11	89.0	1⅝	25	28

* Allowable Tensile Load (Strength Design) = $(f_y)(A_s)$.

Allowable Tensile Load for Dowels Set With Epoxy Resin
f'_c=4,000 psi, Grade 60 Reinforcing Bars, Edge Clearance ≥ 3 in., and Spacing ≥ 6 in.
Table 5.5.4-1

Bar Size	Allowable Design Tensile Load, T*	Drill Hole Size	Required Embedment, Le	
			Uncoated	Epoxy Coated
	(kips)	(in)	(in)	(in)
#4	12.0	⅝	9½	10½
#5	18.6	¾	10½	11½
#6	26.4	1	11½	12½
#7	36.0	1⅛	13½	15
#8	47.4	1¼	16½	18
#9	60.0	1⅜	20	22
#10	73.6	1½	24	27
#11	89.0	1⅝	30	33

* Allowable Tensile Load (Strength Design) = (fy)(As).

Allowable Tensile Load for Dowels Set With Epoxy Resin
f'_c=4,000 psi, Grade 60 Reinforcing Bars, Edge Clearance ≥ 3 in., and Spacing < 6 in.
Table 5.5.4-2

5. Shear Transfer Across a Dowelled Joint

   Shear should be carried across the joint by shear friction on an intentionally roughened surface instead of depending on the dowels to transmit the shear force. Chipping shear keys in the existing concrete can also be used to transfer shear across a dowelled joint, but is expensive.

6. Preparation of Existing Surfaces for Concreting

   See "Removing Portions of Existing Structure" in the General Special Provisions for requirements. Unsound, damaged, dirty, porous, or otherwise undesirable old concrete should be removed, and the remaining concrete surface should be clean, free of laitance, and intentionally roughened to ensure proper bond between the old and new concrete surfaces.

7. Control of Shrinkage and Deflection on Connecting Reinforcement

   Dowels that are fixed in the existing structure may be subject to shear as a result of longitudinal shrinkage and vertical deflection when the falsework is removed. These shear forces may result in a reduced tensile capacity of the connection. When connecting the transverse reinforcing bars across the closure strip is unavoidable, the interaction between shear and tension in the dowel or reinforcing bar should be checked. The use of wire rope or sleeved reinforcement may be acceptable, subject to approval by your supervisor.

   Where possible, transverse reinforcing bars should be spliced to the existing reinforcing bars in a blocked-out area which can be included in the closure strip. Nominal, shear friction, temperature and shrinkage, and distribution reinforcing bars should be bent into the closure strip.

   Rock bolts may be used to transfer connection loads deep into the existing structure, subject to the approval of your supervisor.

8. Post-Tensioning

   Post-tensioning of existing crossbeams may be utilized to increase the moment capacity and to eliminate the need for additional substructure. Generally, an existing crossbeam can be core drilled for post-tensioning if it is less than 30 feet long. The amount of drift in the holes alignment may be approximately 1 inch in 20 feet. For crossbeams longer than 30 feet, external post-tensioning should be considered.

   For an example of this application, refer to Contract 3846, Bellevue Transit Access — Stage 1.

B. Connection Details

The details on the following sheets are samples of details which have been used for widening bridges. They are informational and are not intended to restrict the designer's judgment.

1. Box Girder Bridges

   Figures 5.5.4-1 through 5.5.4-6 show typical details for widening box girder bridges.

   Welding or mechanical butt splice are preferred over dowelling for the main reinforcement in crossbeams and columns when it can be done in the horizontal or flat position. It shall be allowed only when the bars to be welded are free from restraint at one end during the welding process. If bars are to be dowelled, provide a sufficient embedment depth for moment connection bars into existing structure that will provide the required moment capacity in the existing structure. See Table 5.5.4-1 or 5.5.4-2.

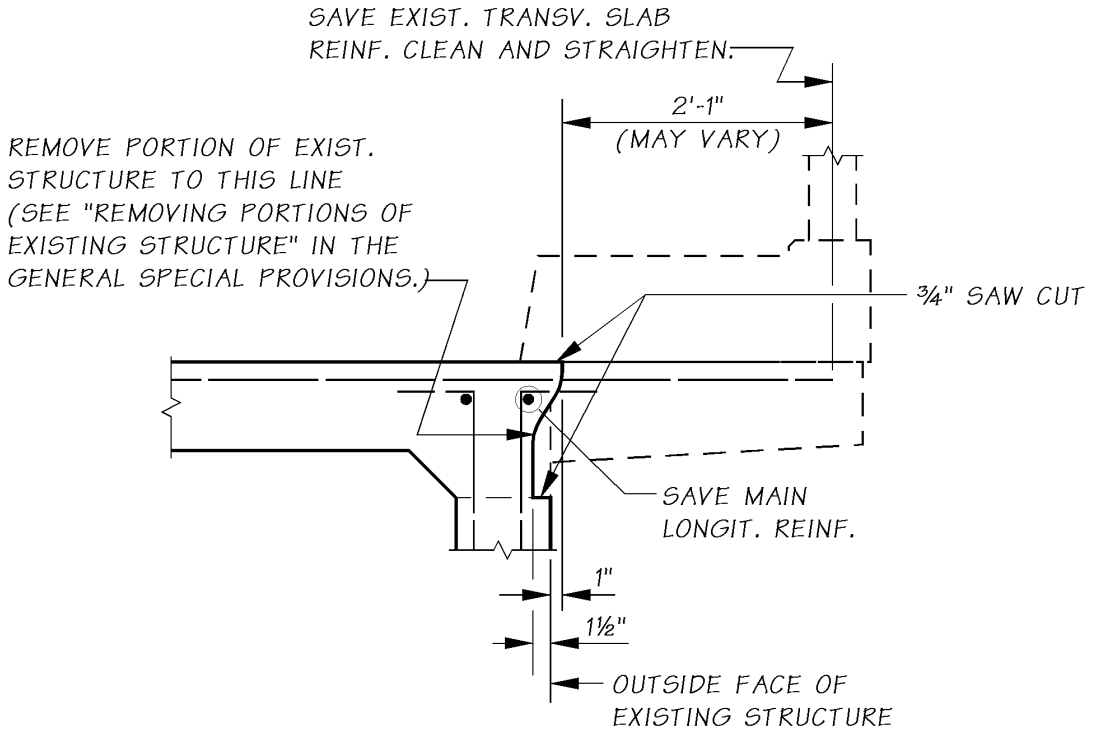

Slab Removal Detail

Figure 5.5.4-1

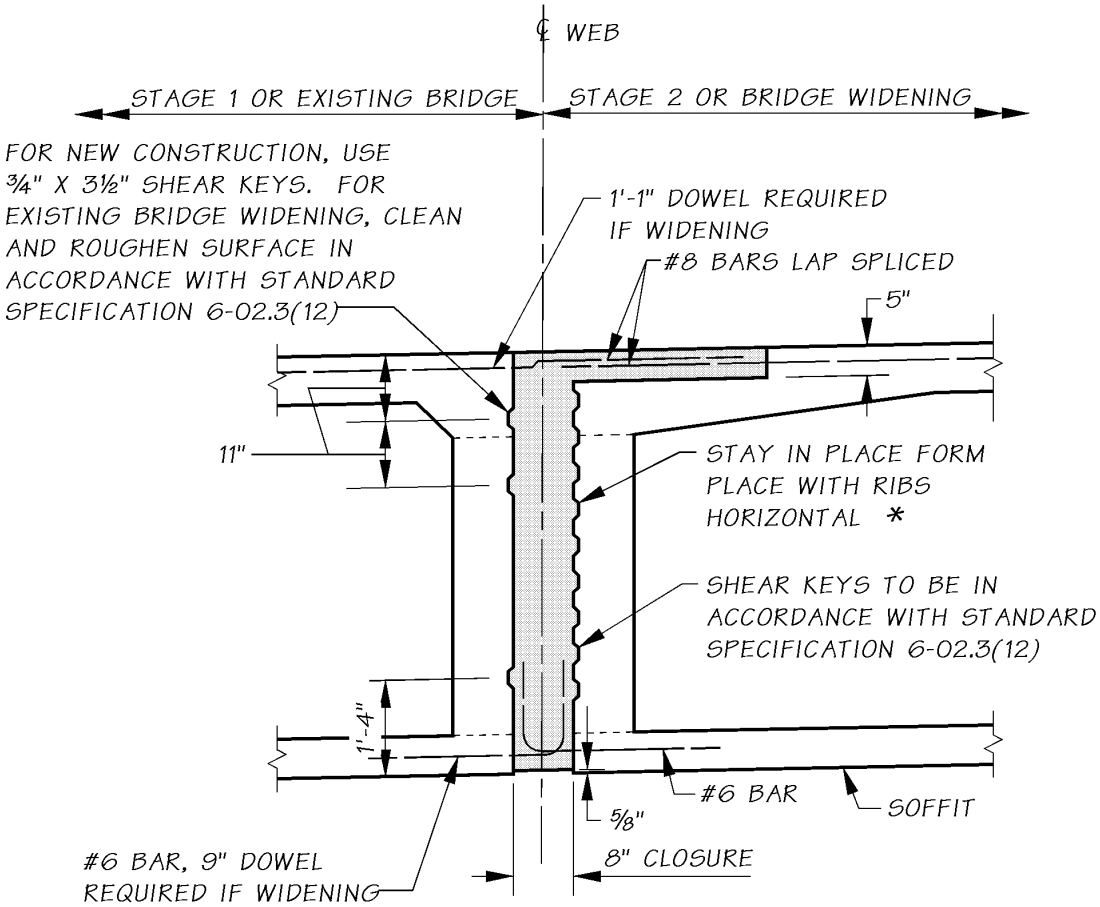

STAY IN PLACE FORM DETAIL FOR BOX GIRDER STAGED CONSTRUCTION OR WIDENING

* STAY IN PLACE FORMS SHALL BE SOLID GALVANIZED SHEET METAL. FORMS MUST BE VERTICALLY BRACED AS NECCESSARY TO PREVENT BOWING DURING CONCRETE PLACEMENT. TIMBER BRACING MUST BE REMOVED. IF STEEL WALES OR TIES ARE USED, THEY MAY BE LEFT IN PLACE. THE CONTRACTOR SHALL SUBMIT DESIGN CALCULATIONS IN ACCORDANCE WITH STANDARD SPECIFICATIONS 6-02.3(16) AND 6-02.3(17).

Box Girder Section in Span
Figure 5.5.4-2

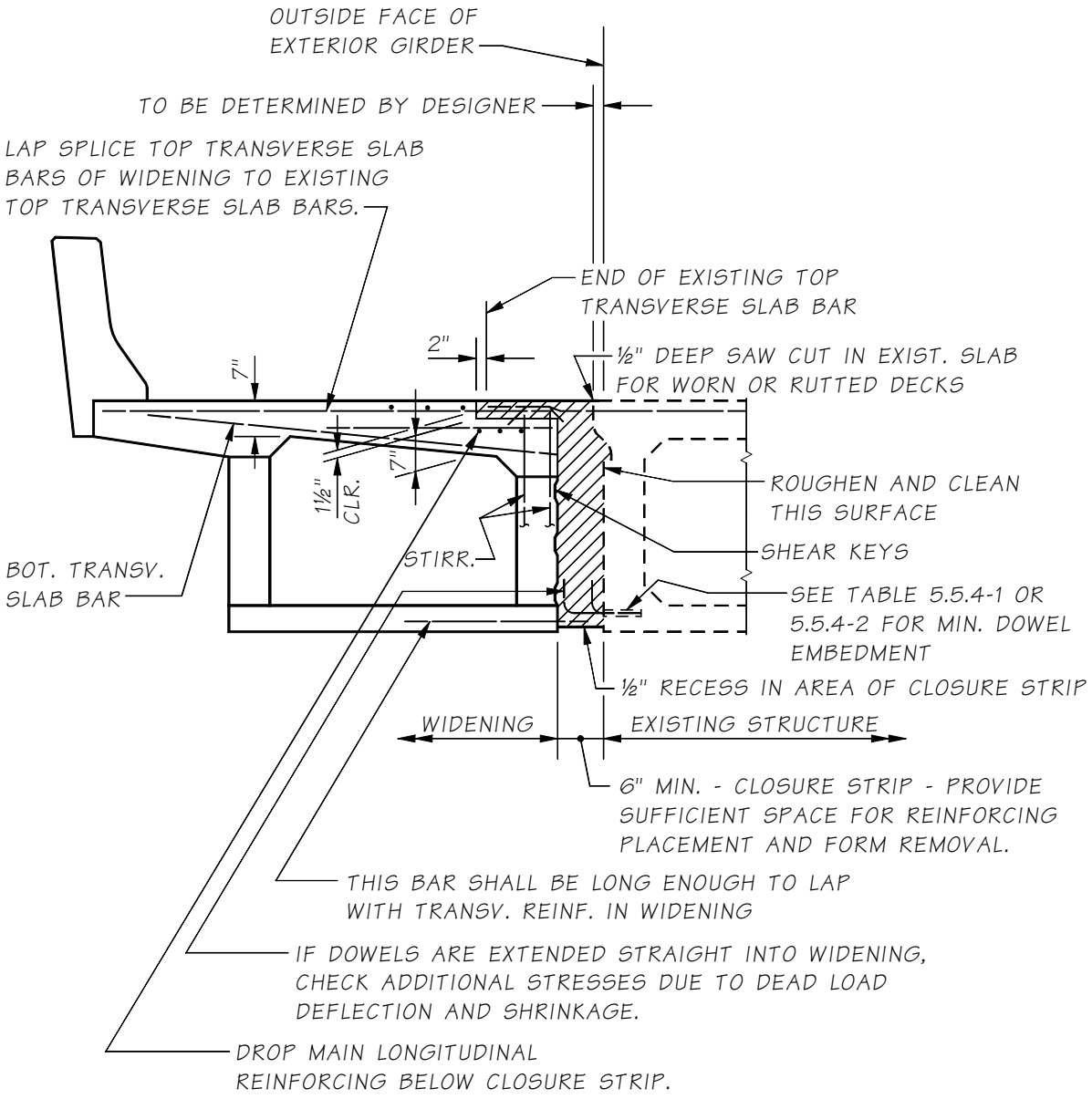

Box Girder Section Through X-Beam
Figure 5.5.4-3

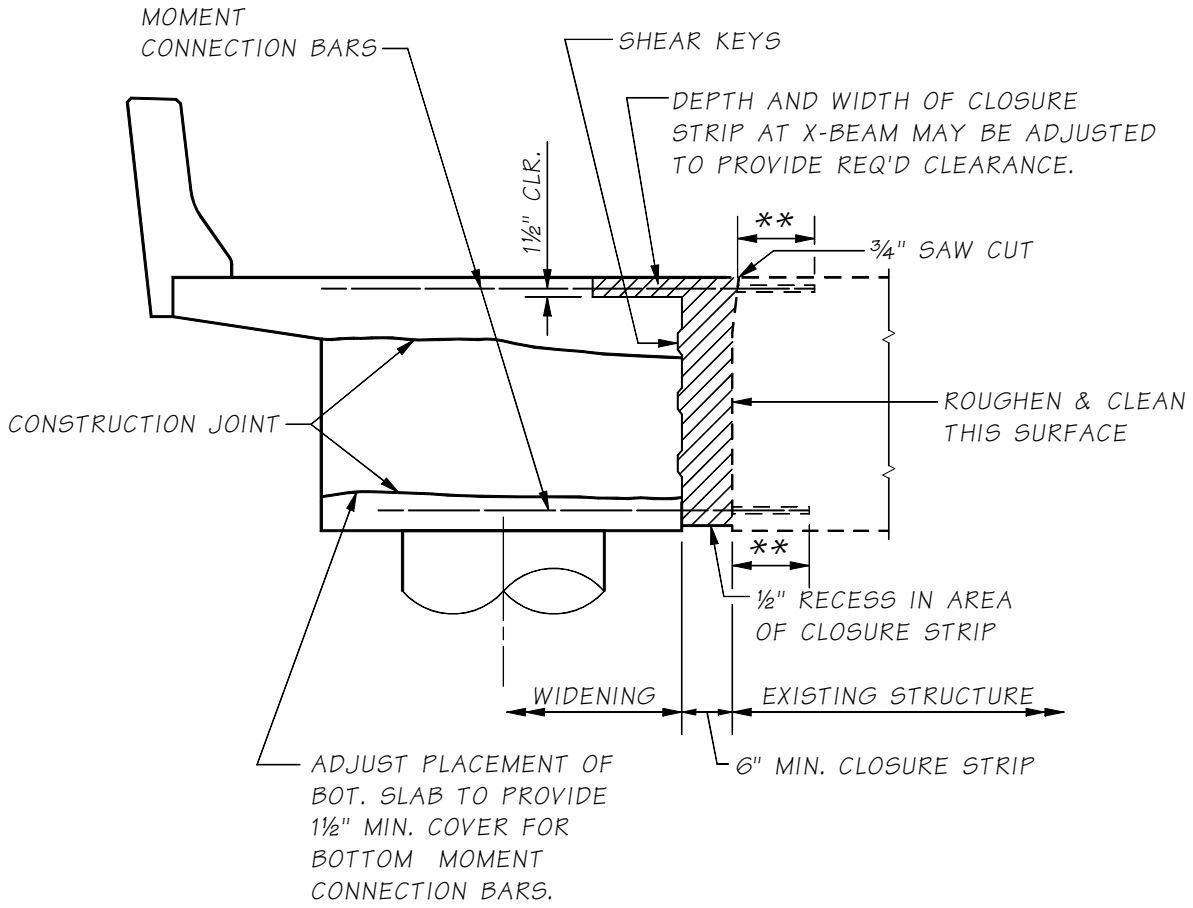

SEE "BOX GIRDER - SECTION IN SPAN" FOR ADDITIONAL DETAILS.

** SEE TABLE 5.5.4-1 OR 5.5.4-2
FOR MINIMUM DOWEL EMBEDMENT

Box Girder Section in Span at Diaphragm Alternate I
Figure 5.5.4-4

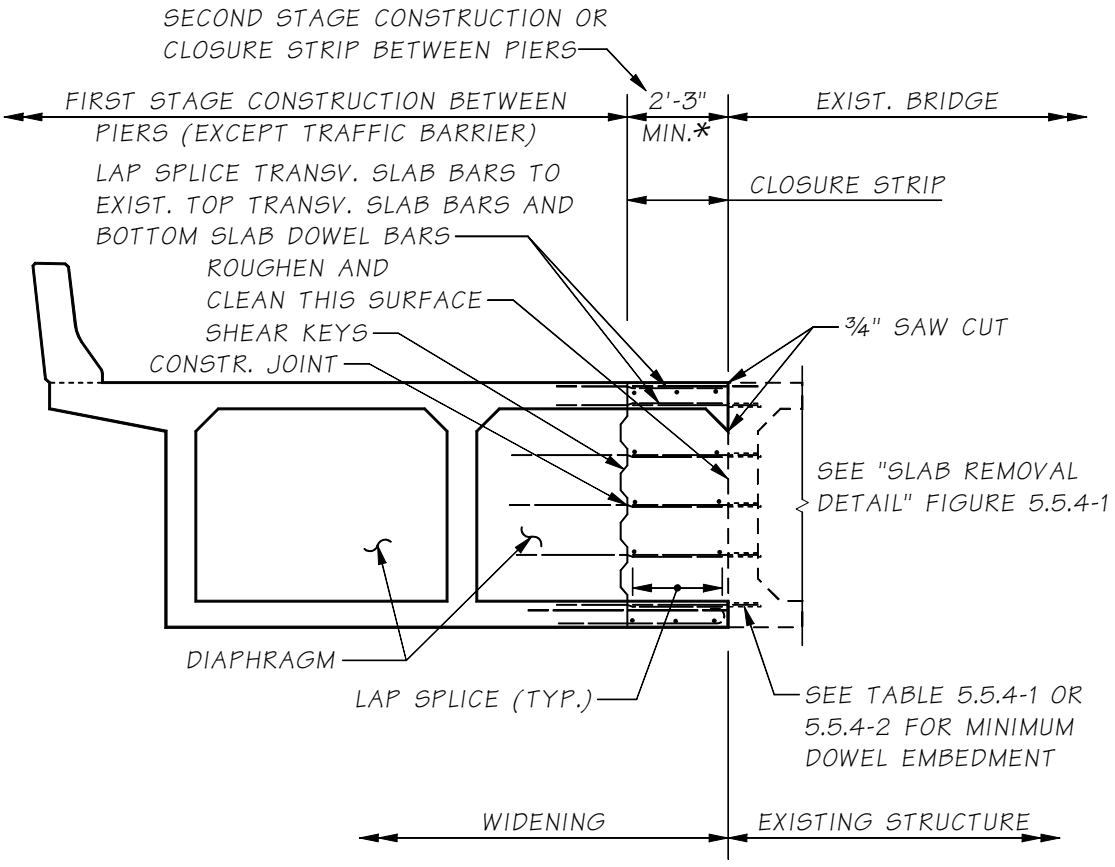

* IF LAP SPLICE EXCEEDS 2'-0", INCREASE WIDTH OF CLOSURE STRIP TO ACCOMMODATE INCREASED LAP SPLICE.

Box Girder Section in Span at Diaphragm Alternate II
Figure 5.5.4-5

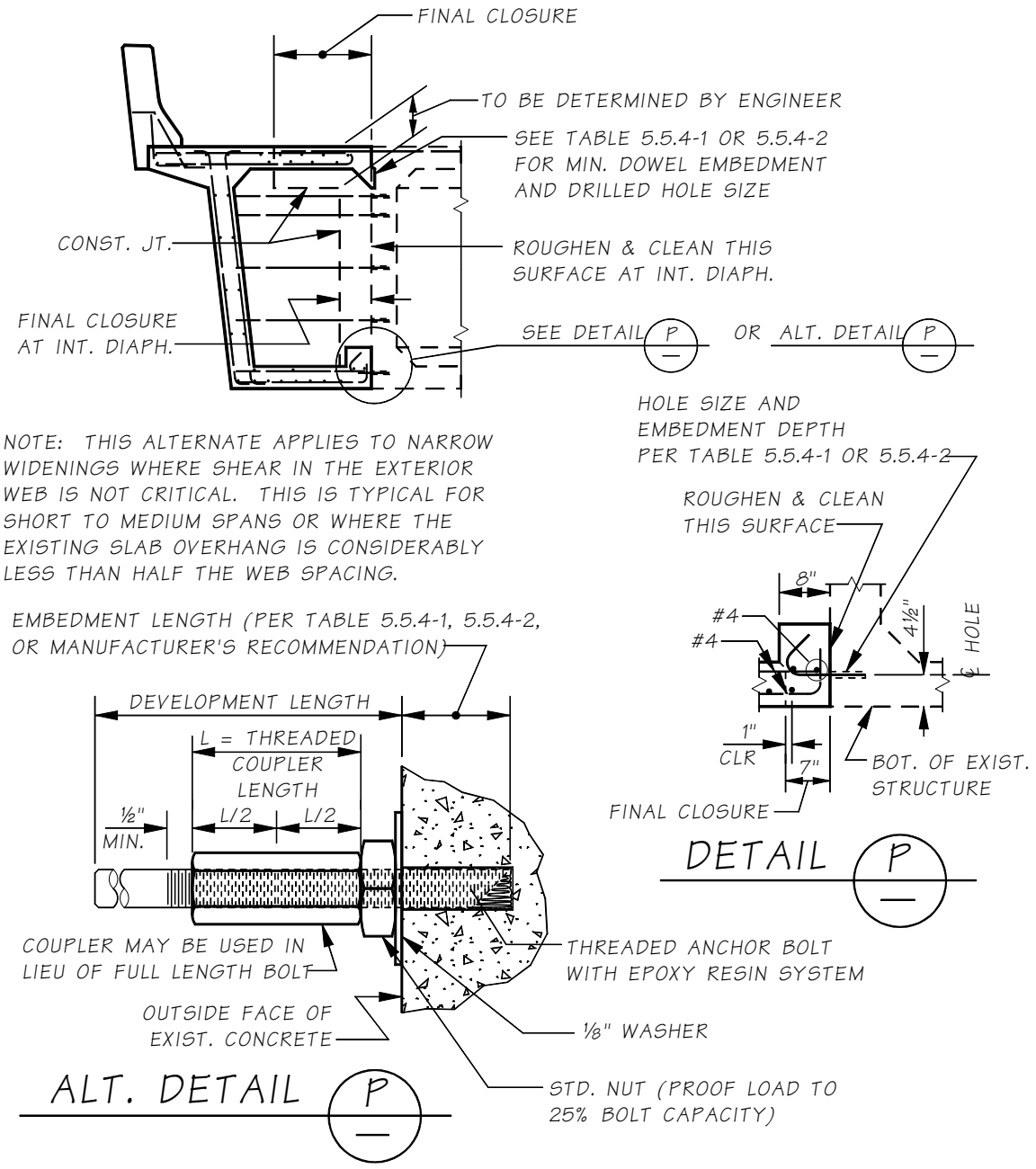

Narrow Box Girder Widening Details
Figure 5.5.4-6

2. Flat Slab Bridges

   It is not necessary to remove any portion of the existing slab to expose the existing transverse reinforcing bars for splicing purposes, because the transverse slab reinforcement is only distribution reinforcement. The transverse slab reinforcement for the widening may be dowelled directly into the existing structure without meeting the normal splice requirements.

   For the moment connection details, see Figure 5.5.4-7 for "Flat Slab — Section through X-Beam."

   Note: Falsework shall be maintained under pier crossbeams until closure pour is made and cured for 10 days.

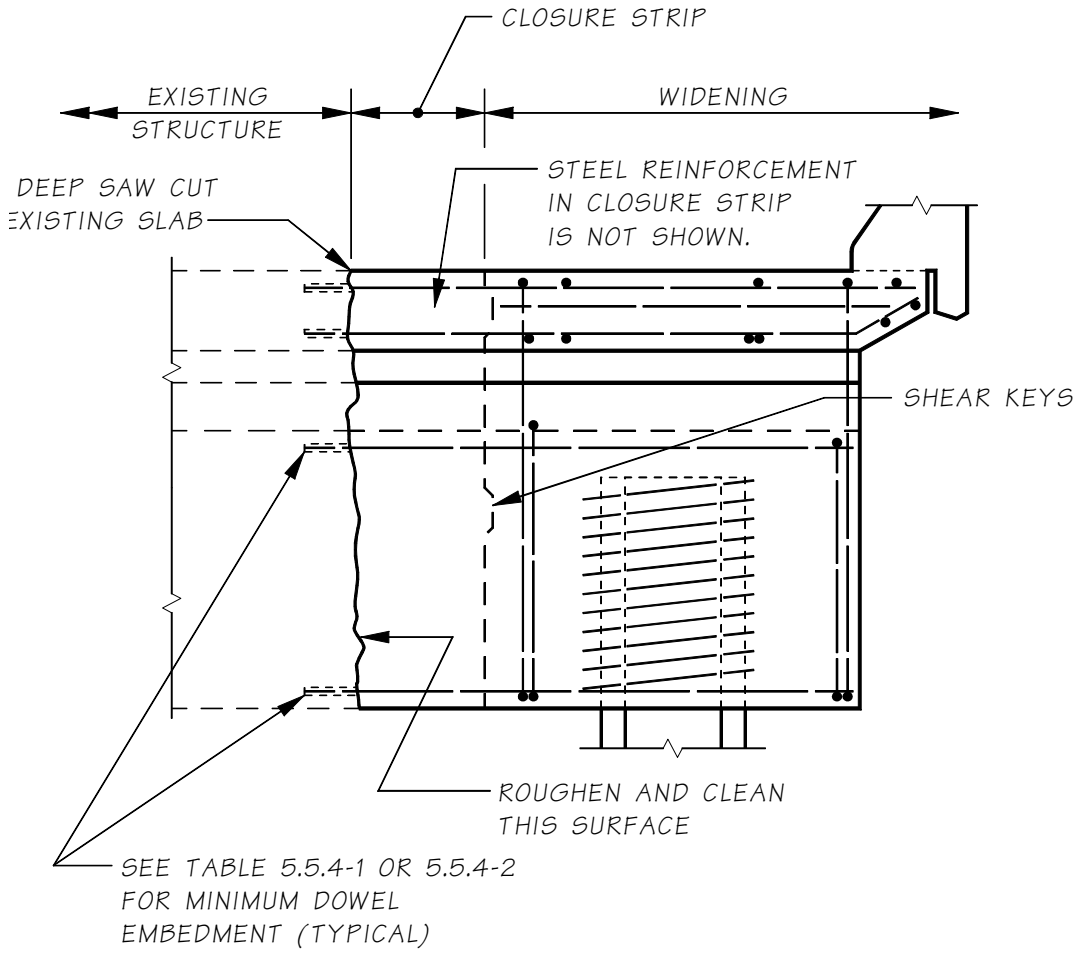

Flat Slab Section through Cross Beam
Figure 5.5.4-7

3. T-Beam Bridges

   Use details similar to those for box girder bridges for crossbeam connections. See Figure 5.5.4-8 for slab connection detail.

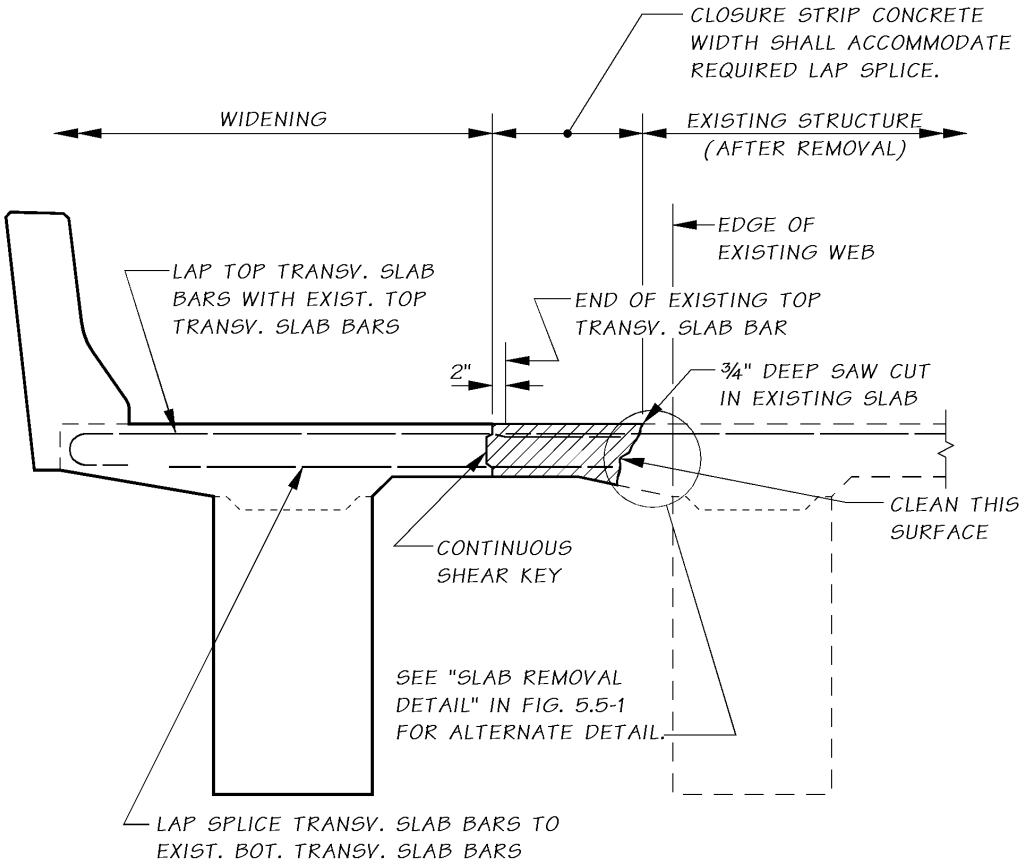

T-Beam — Section in Span

Figure 5.5.4-8

4. Prestress Concrete Girder Bridges

   Use details similar to those for box girder bridges for crossbeam moment connections and use details similar to those in Figure 5.5.4-9 for connecting to the slab.

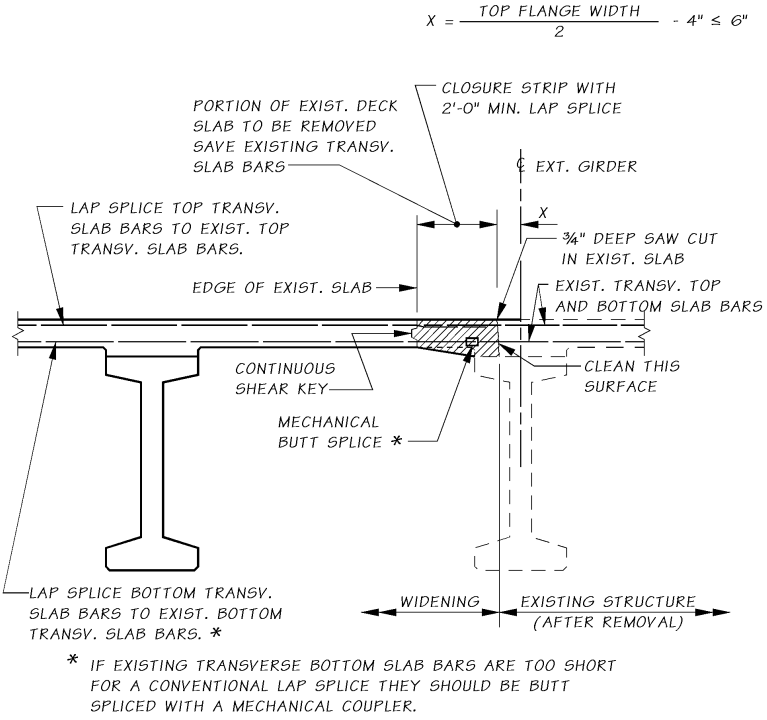

Prestressed Girder — Section in Span

Figure 5.5.4-9

5.5.5 Expansion Joints

The designer should determine if existing expansion joints can be eliminated. It will be necessary to determine what modifications to the structure are required to provide an adequate functional system when existing joints are eliminated.

For expansion joint design, see Section 9.1 “Expansion Joints.” Very often on widening projects it is necessary to chip out the existing concrete deck and rebuild the joint. Figures Figure 5.5.5-1 and 5.5.5-2 show details for rebuilding joint openings for compression seal expansion joints.

If a widening project includes an overlay, the expansion joint may have to be raised, modified or replaced. See the Joint Specialist for plan details that are currently being used to modify or retrofit existing expansion joints.

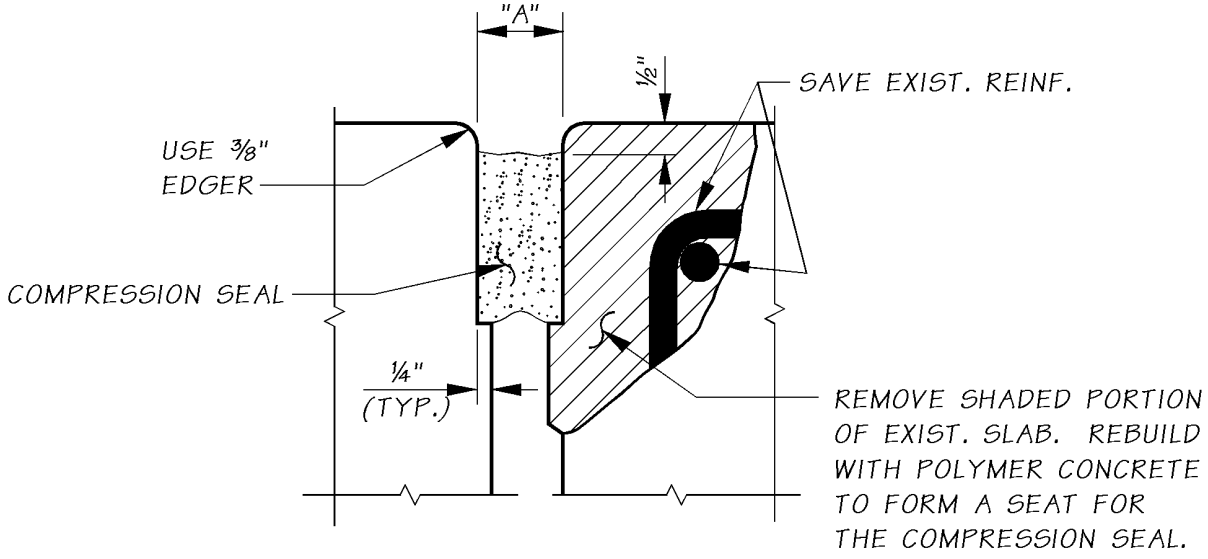

Expansion Joint Detail Shown for Compression Seal — Existing Reinforcing Steel Saved

Figure 5.5.5-1

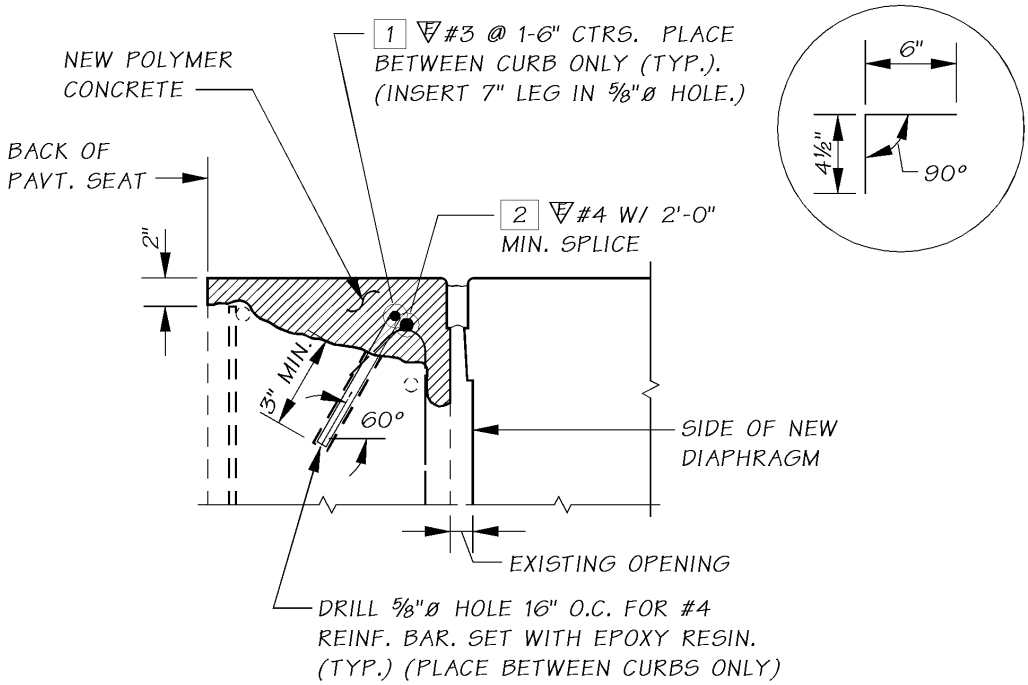

Expansion Joint Detail shown for compression seal with new reinforcing steel added

Figure 5.5.5-2

5.5.6 Possible Future Widening for Current Designs

For current projects that include sidewalks (and where it is anticipated that the structure may be modified or widened in the future), provide a smooth rather than a rough construction joint between the sidewalk and the slab. This will normally pertain to flat slab bridges or where the sidewalk width exceeds the slab cantilever overhang.

5.5.7 Bridge Widening Falsework

For widenings which do not have additional girders, columns, crossbeams, or closure pours, falsework should be supported by the existing bridge. There should be an external support from the ground. The reason is that the ground support will not allow the widening to deflect the existing bridge when traffic is on the bridge. This will cause the "green" concrete to crack where it joins the existing bridge. Designer should contact the bridge construction support unit regarding falsework associated with widenings.

5.5.8 Existing Bridge Widenings

Appendix 5-B3 lists bridge widenings projects that may be used as design aids for the designers. These should not be construed as the only acceptable methods of widening; there is no substitute for the designer's creativity or ingenuity in solving the challenges posed by bridge widenings.

5.6 Precast Prestressed Girder Superstructures

The precast prestressed girder bridge is an economical and rapid type of bridge construction and often preferred for WSDOT bridges. This section discusses the essential of design, detailing, fabrication, and handling of precast prestressed girder bridges.

Precast sections are generally fabricated in plant or somewhere near the construction site and then erected. Precasting permits better material quality control and is often more economical than cast-in-place concrete.

Pre-tensioning is accomplished by stressing strands to a predetermined tension and then placing concrete around the strands, while the stress is maintained. After the concrete has hardened, the strands are released and the concrete, which has become bonded to the tendon, is prestressed as a result of the strands attempting to relax to their original length. The strand stress is maintained during placing and curing of the concrete by anchoring the ends of strands to abutments that may be as much as 500 feet apart. The abutments and appurtenances used in the prestressing procedure are referred to as a pre-tensioning bed or bench.

5.6.1 WSDOT Standard Prestressed Girders

Washington State Standard girders were adopted in the mid-1950s. These girder shapes proved to be very efficient due to their thin webs and small flange fillets. These are still the most efficient shapes available and variations of these girders have been adopted by other states. The original series was graduated in 10-foot increments from 30 feet to 100 feet.

In 1990, revisions were made to the prestressed concrete girder standards incorporating the results of the research done at Washington State University on girders without end blocks. The new standards incorporate three major changes. They have a thicker web, the end blocks are eliminated, and have increased distance between strands. The new standard designations are W74G, W58G, W50G, W42G, and deck bulb tee standards W53DG and W35DG. The numbers refer to the depth of the section.

In 1999, deeper girders, commonly called “Supergirders” were added to the WSDOT prestressed concrete girder standards. These new supergirders may be pretensioned or post-tensioned. The pretensioned standards are designated as WF74G, WF83G and WF95G and the post-tensioned standards are designated as WF74PTG, WF83PTG and WF95PTG.

In 2004 WF42G, WF50G, WF58G, W32BTG, W38BTG and W62BTG were added to WSDOT prestressed girder standards. In 2004 Prestressed concrete tub girders were also added to WSDOT Standard girders. The standard tub girders are 4’-0”, 5’-0” and 6’-0” bottom Flange width and 4’-6” to 7’-0” deep. A Sub Flange could be added to tub girders to improve Structural efficiency and to accommodate placement of stay-in-place precast deck panels.

All WSDOT prestressed girders are high performance high strength concrete girders. They generally rely on high strength concrete to be effective for the spans expected as a single piece. The approximate range of maximum span lengths are as shown in Table 5.6.1-1.

Standard drawings for WSDOT prestressed girders are shown in Appendix 5.6-A and 5.9-A. Table 5.6.1-2 shows the list of WSDOT prestressed girders.

The use of decked bulb-Tee, Double-Tee, and Ribbed Girders shall be limited to state routes with the Average Daily Traffic (ADT) of 30,000 or less. An HMA overlay with membrane over girders shall be specified for all girders of these types.

Type	Depth (in)	Area (in^2)	I_z (in^4)	Y_b (in)	Wt (k/ft)	Volume to Surface Ratio (in)	Max. Span Capability (ft)	Max. Length (190 kips Limit) (ft)
W42G	42.00	381.3	77467	18.67	0.424	2.83	85	-
W50G	50.00	526.5	165462	22.77	0.585	3.11	110	-
W58G	58.00	604.5	265374	27.96	0.672	3.09	125	-
W74G	73.50	747.7	547533	38.03	0.831	2.89	150	-
WF42G	42.00	728.5	184043	20.33	0.806	3.22	115	-
WF50G	50.00	777.5	283126	24.12	0.859	3.21	130	-
WF58G	58.00	826.5	407028	27.93	0.918	3.20	145	-
WF74G	74.00	924.6	735675	35.62	1.020	3.18	175	-
WF83G	82.62	977.9	961875	39.81	1.087	3.18	185	184
WF95G	94.49	1050.7	1332264	45.58	1.167	3.17	160	171
W32BTG	32.00	538.0	74039	17.88	0.598	2.88	75	-
W38BTG	38.00	574.0	114540	21.08	0.638	2.88	90	-
W62BTG	62.00	718.0	385995	33.68	0.798	2.81	130	-
U54G4	54.00	1038.8	292423	20.97	1.154	3.51	130	-
U54G5	54.00	1110.8	314382	19.81	1.234	3.47	130	-
U54G6	54.00	1254.8	341728	18.16	1.394	3.66	120	-
U66G4	66.00	1208.5	516677	26.45	1.343	3.51	155	148
U66G5	66.00	1280.5	554262	25.13	1.423	3.47	150	140
U66G6	66.00	1424.5	605412	23.15	1.583	3.64	145	126
U78G4	78.00	1378.2	827453	32.06	1.531	3.51	170	130
U78G5	78.00	1450.2	885451	30.62	1.611	3.48	170	124
U78G6	78.00	1594.2	969347	28.35	1.771	3.62	165	112
UF60G4	60.00	1207.7	483298	26.03	1.342	3.48	150	149
UF60G5	60.00	1279.7	519561	24.74	1.422	3.45	150	140
UF60G6	60.00	1423.7	568717	22.79	1.582	3.61	135	126
UF72G4	72.00	1377.4	787605	31.69	1.530	3.48	165	130
UF72G5	72.00	1449.4	844135	30.26	1.610	3.45	170	124
UF72G6	72.00	1593.4	925720	28.03	1.770	3.60	160	113
UF84G4	84.00	1547.1	1190828	37.42	1.719	3.48	190	116
UF84G5	84.00	1619.1	1272553	35.89	1.799	3.46	185	111
UF84G6	84.00	1763.1	1395939	33.41	1.959	3.59	170	102

Section Properties of WSDOT Standard Precast Pretensioned Girders
Table 5.6.1-1

Standard Drawing	Drawing Number
I-Girder Sections	5.6-A1-1
Decked Girder Sections	5.6-A1-2
Spliced-Girder Sections	5.6-A1-3
Tub Sections	5.6-A1-4
Prestressed Girder Construction Sequence	5.6-A2-1 through 3
W42G	5.6-A3-1 through 10
W50G	5.6-A4-1 through 9
W58G	5.6-A5-1 through 10
W74G	5.6-A6-1 through 10
WF42G	5.6-A7-1 through 3
WF50G	5.6-A8-1 through 3
WF58G	5.6-A9-1 through 3
WF74G	5.6-A10-1 through 11
WF83G	5.6-A11-1 through 10
WF95G	5.6-A12-1 through 10
W32BTG	5.6-A13-1 through 3
W38BTG	5.6-A14-1 through 3
W62BTG	5.6-A15-1 through 3
Tub Girders without Top Flange	5.6-A16-1 through 6
Tub Girders with Top Flange	5.6-A17-1 through 7
Stay-in-place Deck Panel	5.6-A18-1
1’-0” Solid Slabs	5.6-A19-1 through 3
1’-6” Voided Slabs	5.6-A20-1 through 3
2’-2” Voided Slabs	5.6-A21-1 through 4
Ribbed Girders	5.6-A22-1 through 3
Double-Tee Girders	5.6-A23-1 through 2
W35DG Decked Bulb-Tee	5.6-A24-1 through 3
W41DG Decked Bulb-Tee	5.6-A25-1 through 3
W53DG Decked Bulb-Tee	5.6-A26-1 through 3
W65DG Decked Bulb-Tee	5.6-A27-1 through 4
WF74PTG Spliced Girder	5.9-A1-1 through 5
WF83PTG Spliced Girder	5.9-A2-1 through 5
WF95PTG Spliced Girder	5.9-A3-1 through 5
Spliced Tub-Girder without Top Flange	5.9-A4-1 through 8
Spliced Tub-Girder With Top Flange	5.9-A5-1 through 8

List of WSDOT Standard Drawings
Table 5.6.1-2

5.6.2 Criteria for Girder Design

The present WSDOT criteria is to design prestressed girder bridges as simple span for all simple span and continuous spans. Effects of creep and shrinkage are not considered. This is a somewhat conservative procedure, but it minimizes engineering time. For continuous structures consisting of a large number of girders, a more exact analysis could be used, as directed by the design supervisor. Additional comments concerning special problems in design of continuous bridges are added below. The design criteria for prestressed girders is summarized in Table 5.2.2-1.

For continuous structure same type and number of prestressed girders shall be used. Girder type or number of girder could only be changed at expansion joints at piers if applicable.

A. Support Conditions

The prestressed girders are assumed to be supported on rigid permanent simple supports. These supports can be either bearing seats or elastomeric pads. The design span length is the distance center to center of bearings for simple spans. For continuous spans erected on falsework (raised crossbeam), the effective point of support for girder design is assumed to be the face of the crossbeam. For continuous spans on crossbeams (dropped or semi-dropped crossbeam), the design span length is usually the distance center to center of temporary bearings as shown in Figure 5.6.2-1.

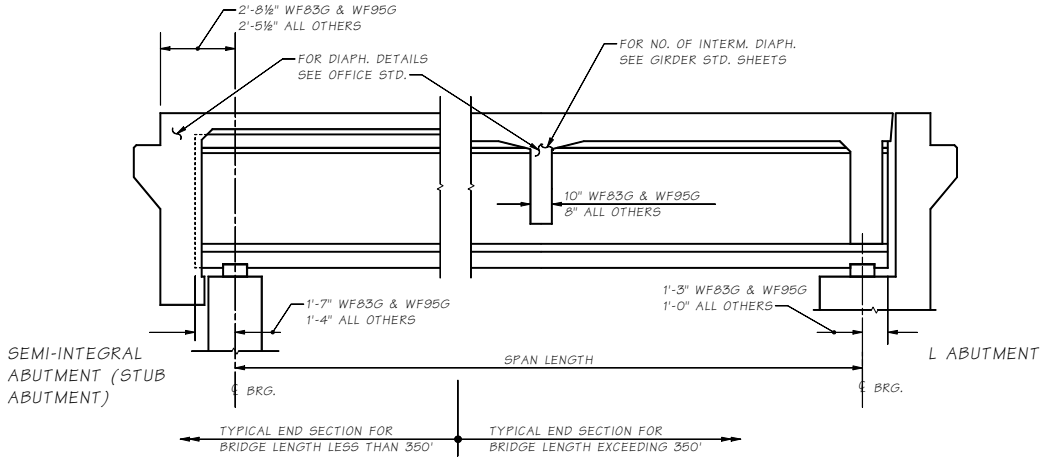

Typical Prestressed Girder Span
Figure 5.6.2-1

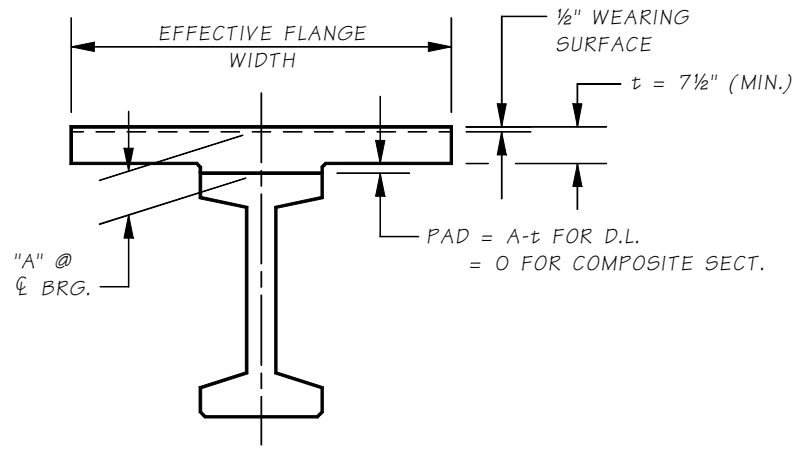

Typical Section for Computation of Composite Section Properties
Figure 5.6.2-2

B. Composite Action

1. General

   The sequence of construction and loading is extremely important in the design of prestressed girders. The composite section has a much larger capacity than the basic girder section but it cannot take loads until the slab has obtained adequate strength. Assumptions used in computing composite section properties are shown in Figure 5.6.2-2.

2. Load Application

   The following sequence and method of applying loads is used in girder analysis:

   a. Girder Dead Load is applied to the girder section.

   b. Diaphragm Dead Load is applied to the girder section.

   c. Slab Dead Load is applied to the girder section.

   d. Barrier, Overlay Dead Load, and Live Load are applied to the composite section.

      Dead load of one traffic barrier is divided among a maximum of three girders and this uniform load is applied to the composite section. The dead load of any overlay and live load plus impact is applied to the composite section.

3. Composite Section Properties

   Minimum deck slab thickness is specified as 7 ½ inches by office practice, but may be thicker if girder spacing dictates. This slab forms the top flange of the composite girder in prestressed girder bridge construction. The properties of this slab-girder composite section are affected by specification and by physical considerations.

   a. Flange Width

      The effective width of slab on each side of the girder centerline which can be considered to act as a compressive flange shall not exceed any of the following:

      1. One-eighth of the span length.
      2. Six times the thickness of slab plus one-fourth of the girder flange width.
      3. One-half the distance to the next girder.
      4. The actual distance to the edge of slab.

         For effective tension flange widths, see AASHTO LRFD Specifications Section 5.7.3.4.

   b. Flange Position

      For purposes of calculating composite section properties, the bottom of the slab shall be assumed to be directly on the top of the girder. This assumption may prove to be true at center of span when excess girder camber occurs.

      For dimensioning the plans, an increased dimension from top of girder to top of slab is used at centerline of bearing. This is called the “A” dimension. This dimension accounts for the effects of girder camber, vertical curve, slab cross slope, etc. See Appendix 5-B1 for method of computing.

c. Flange Thickness

For purposes of computing composite section properties, the slab thickness shall be reduced by ½ inch to account for wearing. Where it is known that a bridge will have an asphalt overlay applied prior to traffic being allowed on the bridge, the full slab thickness can be used as effective slab thickness. The effective slab width shall be reduced by the ratio E_s/E_g. The effective modulus of composite section is then E_g.

d. Section Dead Load

The slab dead load to be applied to the girder shall be based on full thickness plus any overhang. The full effective pad ("A"-t) weight shall be added to that load. This assumed pad weight is applied over the full length of the girder.

C. Design Procedure

1. General

The WSDOT Prestressed Girder Design computer program PGSuper uses a trial and error method to arrive at solution for stress requirement and is the preferred method for final design of length and spacing. Some publications suggest various direct means for determining stress and position, but the procedures are generally quite complex.

2. Stress Conditions

The stress limits as described in Table 5.2.3-1 must be met for prestressed girder. One or more of the conditions described below may govern design. Each condition is the result of the summation of stresses with each load acting on its appropriate section (such as girder only, composite section). Precast girders shall also be checked during lifting, transportation, and erection stages by the designer to assure that girder delivery is feasible. Impact during the lifting stage shall be 0 percent and during transportation shall be 20 percent of the dead load of the girder. Impact shall be applied either upward or downward to produce maximum stresses.

D. Basic Assumptions

The following basic assumptions are used in the design of these standard girders. Figure 5.6.2-1 illustrates some of the factors which are constant in the WSDOT Prestressed Girder Design computer program, PGSuper. Strand location at end and midspan of typical prestressed girder is shown in Figure 5.6.2-3. Appendices 5.6-A and 5.9-A shows the standard strand positions in these girders.

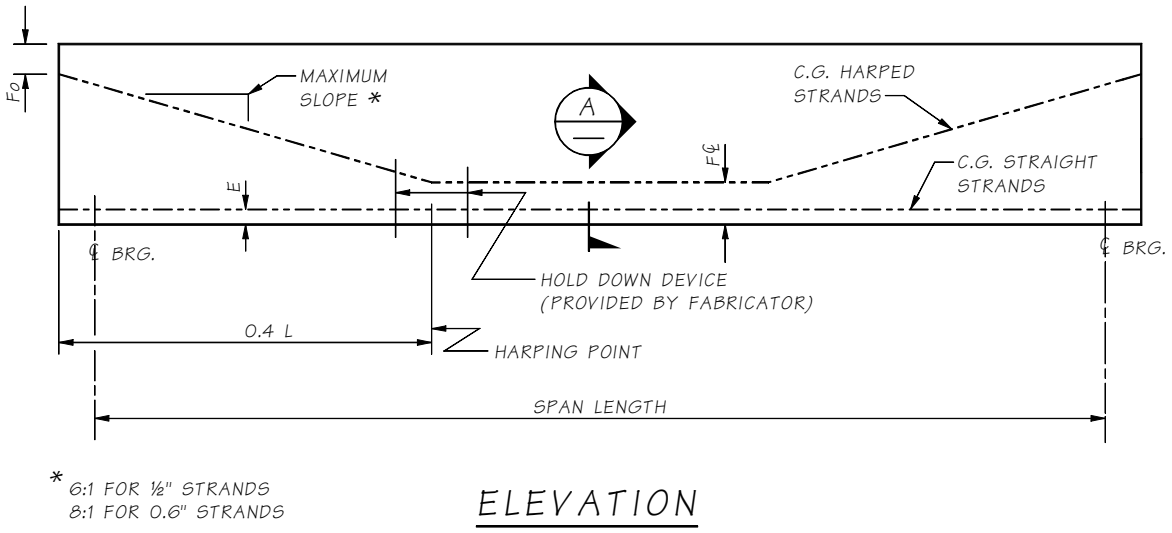

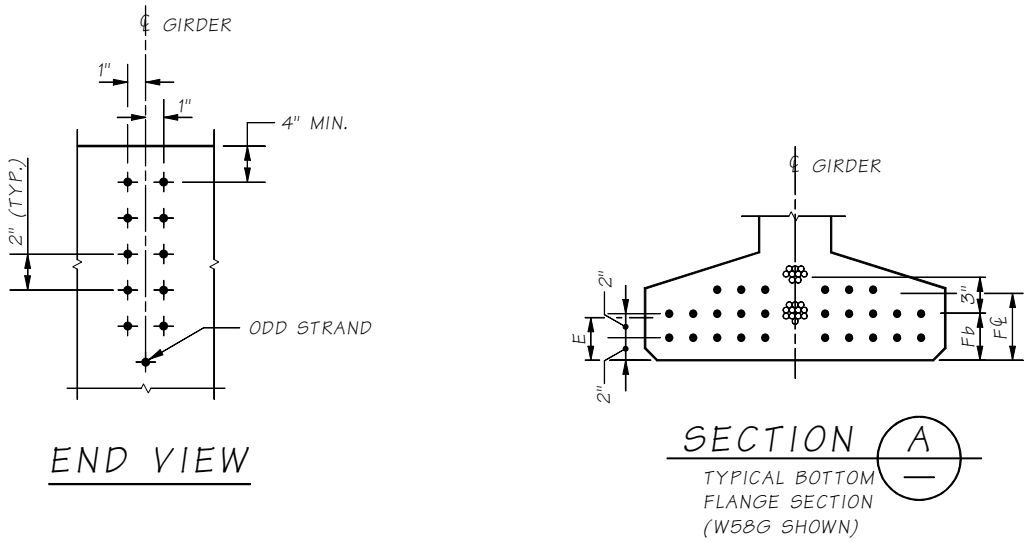

Figure 5.6.2-3

E. Girder End Types

There are four end types shown on the girder sheets. Due to the extreme depth of the WF83G and WF95G girders, and possible end of girder tilt at the piers for profile grades, the designer will need to pay particular attention to details to assure the girders will fit and perform as intended. The four end types are identified with pertinent detailing dimensions as follows:

1. End Type A

   End Type A as shown in Figure 5.6.2-4 is for cantilever end piers with an end diaphragm cast on the end of the girders. End Type A has a recess at the bottom of the girder near the end for an elastomeric bearing pad. The maximum bearing pad size expected for wide Flange I-girders is 18 inches long x 35 inches wide. The recess at the centerline of bearing is ¾ inch deep to accommodate an elastomeric pad length of 18 inches. This recess is to be used for profile grades up to and including 4 percent. The recess is to be replaced by an embedded steel plate flush with the bottom of the girder for grades over 4 percent. A tapered bearing plate, with stops at the edges to contain the elastomeric pad, can be welded or bolted to the embedded plate to provide a level bearing surface.

   Reinforcing bars and pretensioned strands project from the end of the girder. The designer shall assure that these bars and strands fit into the end diaphragm. Embedment of the girder end into the end diaphragm shall be a minimum of 3 inches and a maximum of 6 inches. For girder ends where the tilt would exceed 6 inches of embedment, the girder ends shall be tilted to attain a plumb surface when the girder is erected to the profile grade. Embedment into the end wall shall be 3 inches.

   The gap between the end diaphragm and the stem wall shall be a minimum of 2½″ or ½″ greater than required for longitudinal bridge movement.

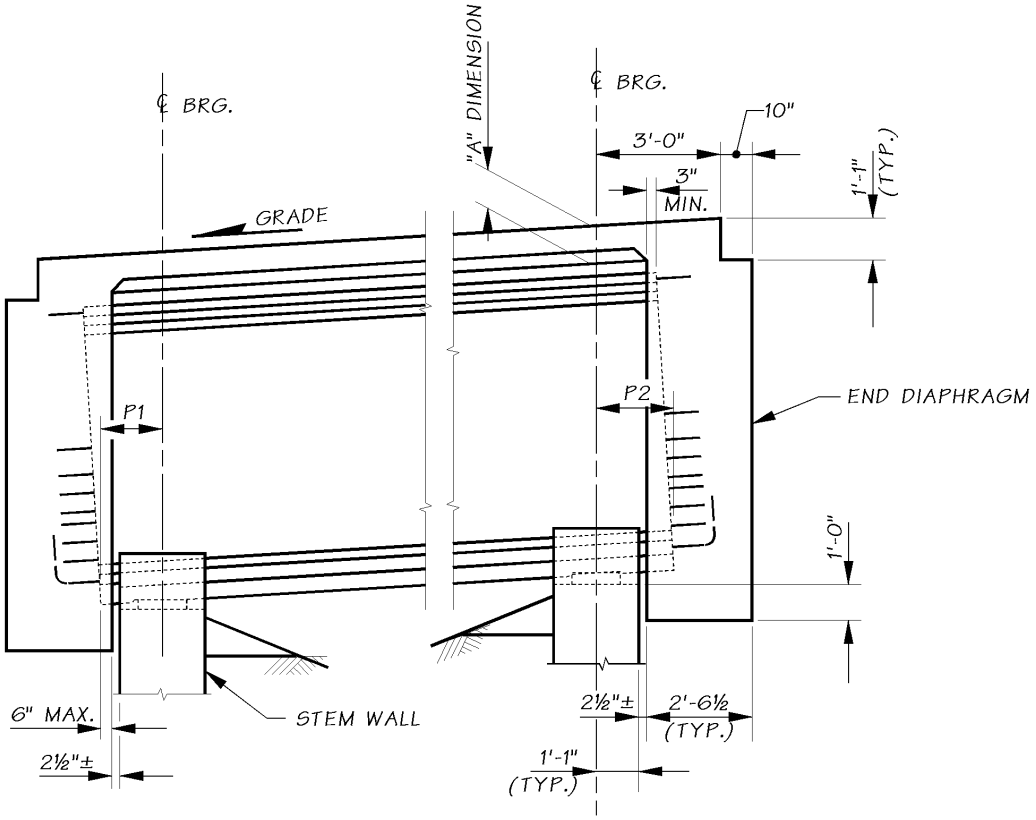

End Type A (End Diaphragm on Girder)
Figure 5.6.2-4

2. End Type B

   End Type B as shown in Figure 5.6.2-5 is for "L" type abutments. End Type B also has a recess at the bottom of the girder for an elastomeric bearing pad. Notes regarding the bearing recess on End Type A also apply to End Type B. End Type B is the only end type that does not have reinforcing or strand projecting from the girder end.

   Note that the centerline of the bearing is not coincident with the centerline of the diaphragm. For girders on a grade, dimensions for each bearing, P1 and P2, from the ends of the girder will be different. Typically the centerline of bearing will be 1′–3″ minimum from the end of the girder to fit the bearing and provide adequate edge distance. The designer may want to locate the diaphragm such that it is equal distance from the centerline of the bearing, and the centerline of the bearing is equal distance from the face of the back wall of both abutments. This should create consistency in dimensions and make it easier to calculate girder lengths.

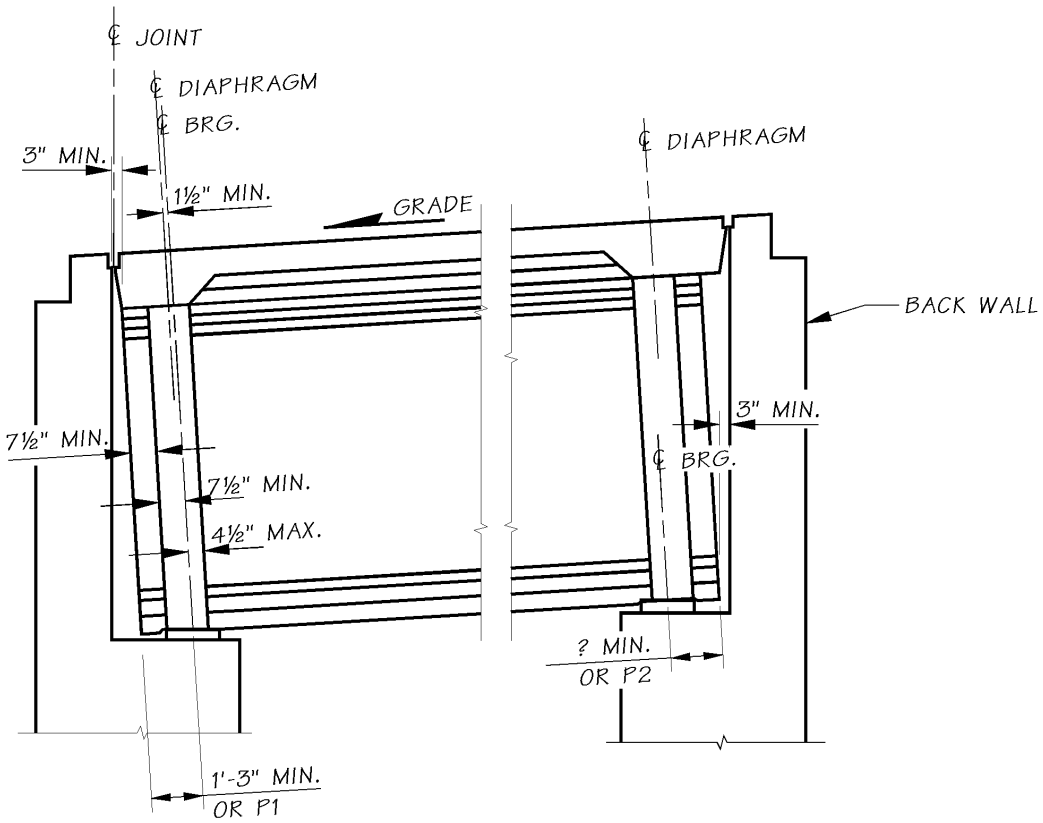

End Type B (L-Shape End Pier)
Figure 5.6.2-5

3. End Type C

   End Type C as shown in Figure 5.6.2-6 is for continuous spans and an intermediate hinge diaphragm at an intermediate pier. There is no bearing recess and the girder is temporarily supported on oak bunking blocks. This detail is generally used only in low seismic areas. This end type is generally used for bridges east of the Cascade Mountains.

   The designer shall check the edge distance and provide a dimension that prevents edge failure, or spalling, at the top corner of the supporting cross beam for load from the oak block including dead loads from girder, slab, and construction loads.

   Notes to Designer for Prestressed Girders Intermediate Hinge Diaphragms

   a. All girders in each bridge shall be of the same depth.

   b. Design girders as simple span (do not deduct negative moments from maximum simple beam positive moments).

   c. Provide reinforcement for negative moments at intermediate piers in the deck due to live loads and superimposed dead loads from traffic barrier, pedestrian walkway, utilities, etc.

   d. Check hinge bars size and minimum embedment in crossbeam.

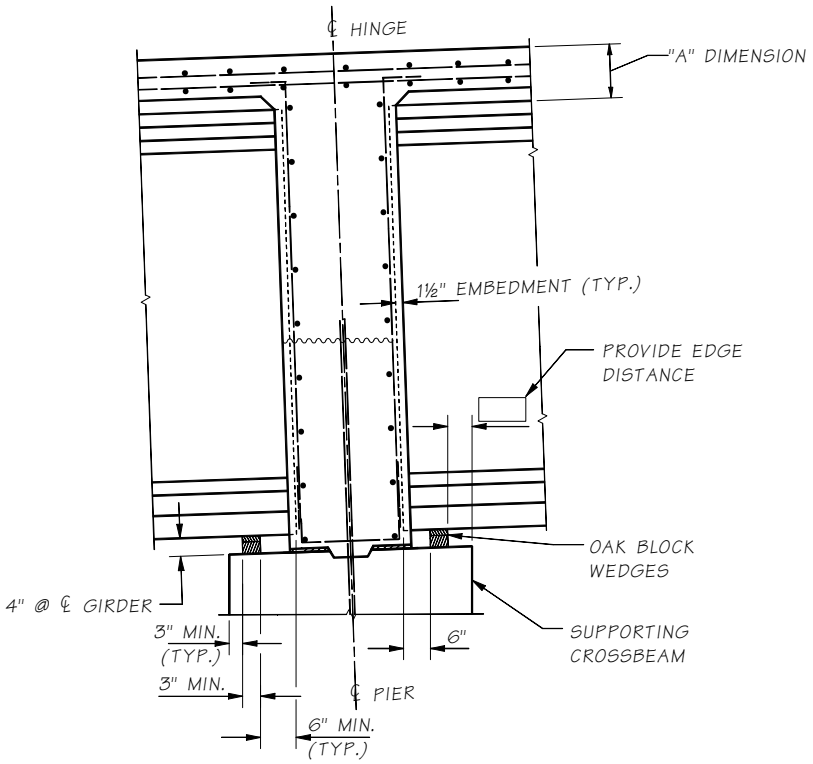

End Type C (Intermediate Hinge Diaphragm)
Figure 5.6.2-6

4. End Type D

   End Type D as shown in Figure 5.6.2-7 is for continuous spans fully fixed to columns at intermediate piers. There is no bearing recess and the girder is temporarily supported on oak bunking blocks.

   The designer shall check the edge distance and provide a dimension that prevents edge failure, or spalling, at the top corner of the supporting cross beam for load from the oak block including dead loads from girder, slab, and construction loads.

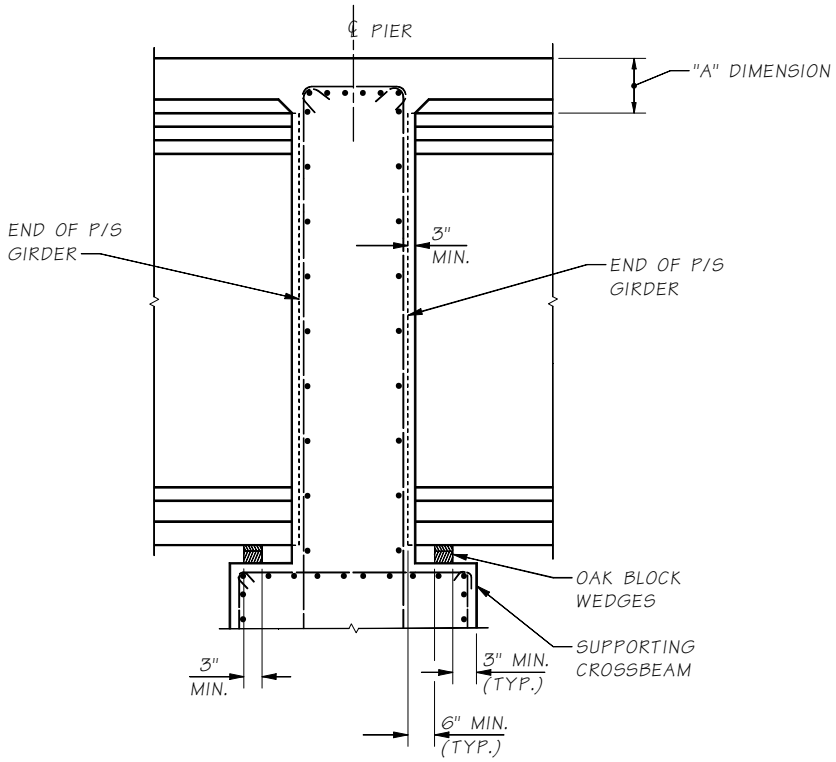

End Type D
Figure 5.6.2-7

F. Minimum Crossbeam Width

In order to have room for placing oak blocks with required clearances on cross-beams, the cross-beams must be designed with a minimum width of 5′−0″ for WF95G and WF83G, WF74G, W74G, and 4′−6″ for all other girders. Designer is to check edge distance of oak blocks to top outside corner of cross-beam for reaction from girder weight + diaphragms + (20 psf) construction load. Adjust minimum width of cross-beam as necessary to prevent corner support failure.

5.6.3 Fabrication and Handling

A. Shop Plans

Fabricators of prestressed girders are required to submit shop plans which show specific details for each girder that they construct. These shop plans are checked and approved by the Project Engineer's office for conformance with the Contract Plans and specifications.

B. Special Problems for Fabricators

1. Strand Tensioning

The method selected for strand tensioning may affect the design of the girders. The strand arrangements shown in the office standard plans and included in the Prestressed Girder Design computer program are satisfactory for tensioning methods used by fabricators in this state. Harped strands are normally tensioned by pulling them as straight strands to a partial tension. The strands are then deflected vertically as necessary to give the required harping angle and strand stress. In order to avoid overtensioning the harped strands by this procedure, the slope of the strands is limited to a maximum of 6:1 for 0.5″ ϕ strands and 8:1 for 0.6″ ϕ strands. The straight strands are tensioned by straight jacking.

2. Hold Down Forces

Forces on the hold-down units are developed as the harped strands are raised. The hold-down device provided by the fabricator must be able to hold the vertical component of the harping forces. Normally a two or more hold-down unit is required. Standard commercial hold-down units have been preapproved for use with particular strand groups.

3. Numbers of Strands

Since the prestressing beds used by the girder fabricators can carry several girders in a line, it is desirable that girders have the same number of strands where practical. This allows several girders to be set up and cast at one time and saves both time and strand material.

C. Handling and Hauling of Long Prestressed Girders

1. General

The designer shall specify the lifting device locations and the corresponding concrete transfer strength that provides an adequate factor of safety for lateral stability. The calculations shall conform to Article 5.2.9 of the PCI Design Handbook, Precast and Prestressed Concrete, Fifth Edition [17], or other approved methods. Other references [5, 6, 18, 19, 20] provide the derivation of the theory and design examples. Temporary top strands may be used to improve the stability of the girder during handling, and to reduce the required concrete transfer strength.

Considerations for handling and shipping long prestressed girders relate primarily to weight, length, height, and lateral stability. The effect of each variable differs considerably depending on where the handling is taking place: in the plant, on the road, or at the jobsite.

2. In-Plant Handling

The primary considerations for in-plant handling are weight and lateral stability. The maximum weight that can be handled by precasting plants in the Pacific Northwest is 200 kips. Pretensioning lines are normally long enough so that the weight of a girder governs capacity, rather than its length. Headroom is also not generally a concern for the deeper sections.

Lateral stability can be a concern when handling long, slender girders. When the girder forms are stripped from the girder, the prestressing level is higher and the concrete strength is lower than at any other point in the life of the member.

The WSDOT prestressed girder sections are relatively wide and stiff about their weak axes and, as a result, exhibit good stability, even at their longer pretentioned lengths. The simplest method of improving stability is to move the lifting devices away from the ends. This invariably increases the required concrete release strength, because decreasing the distance between lifting devices increases the concrete stresses at the harp point. Stresses at the support may also govern, depending on the exit location of the harped strands.

Alternatively, the girder sections may be braced to provide adequate stability. Temporary prestressing in the top flange can also be used to provide a larger factor of safety against cracking.

Other types of bracing have also been used successfully for many years. These systems are generally based on experience rather than theory. Other methods of improving lateral stability, such as raising the roll axis of the girder, are also an option.

For stability analysis of prestressed girder during in-plant handling in absence of more accurate information, the following parameters shall be used:

1. Height of pick point above top of girder = 0.0 in
2. Lifting loop or lifting bars placement tolerance = 0.25 in
3. Maximum girder sweep tolerance = 0.00052 in/in

3. Pick Up Points

The office standard plans show pick-up points for the girders. These points are critical since the girder is in its most highly stressed condition just after strand release. In some cases, fabricators may request to move the pick-up points toward the center of the girder. The request must be reviewed carefully since a decrease in girder dead load moment near centerline span may cause overstressing of the girder. Similarly, the girders must never be supported at any point other than the centerline of bearing during storage. The girders are also very sensitive to lateral loads and accordingly must be stored in a true vertical position.

4. Girder Lateral Bending

Long prestressed girders are very flexible and highly susceptible to lateral bending. Lateral bending failures are sudden, catastrophic, costly, pose a serious threat to workers and surroundings, and therefore must be guarded against. The office standard plans state that girders over certain given lengths must be laterally braced and that all girders must be handled carefully. It is the fabricator's responsibility to provide adequate bracing and provide suitable handling facilities. On unusually long girders, however, the designer should give this matter additional consideration. Published material on girder lateral bending should be consulted and used to assure the constructability of the girder design chosen: see references [5,18,19,20].

D. Shipping

1. General

The designer shall assure that the girders can be reasonably delivered to the site as part of the preliminary design. Vertical and horizontal clearances along the selected delivery route shall be verified.

The ability to ship deep girder sections can be influenced by a large number of variables, including mode of transportation, weight, length, height, and lateral stability. Some variables have more influence than others. As such, the feasibility of shipping deep girders is strongly site-dependent. It is recommended that routes to the site be investigated during the preliminary design phase. To this end, on projects using long, heavy girders, WSDOT can place an advisory in their special provisions including shipping routes, estimated permit fees, escort vehicle requirements, Washington State Patrol requirements, and permit approval time.

2. Mode of Transportation

Three modes of transportation are commonly used in the industry: truck, rail, and barge. In Washington State, an overwhelming percentage of girders are transported by truck, so discussion in subsequent sections will be confined to this mode. However, on specific projects, it may be appropriate to consider rail or barge transportation.

Standard rail cars can usually accommodate larger loads than a standard truck. Rail cars range in capacity from approximately 120 to 200 kips. However, unless the rail system runs directly from the precasting plant to the jobsite, members must be trucked for at least some of the route, and weight may be restricted by the trucking limitations.

For a project where a large number of girders are required, barge transportation is usually the most economical. Product weights and dimensions are generally not limited by barge delivery, but by the handling equipment on either end. In most cases, if a product can be made and handled in the plant, it can be shipped by barge. Of course, this applies only if both the plant and jobsite are fully accessible by barge.

3. Weight Limitations

Girders shipped in some states have weighed in excess of 200 kips. The net weight limitation with trucking equipment currently available in Washington State is approximately 190 kips, if a reasonable delivery rate (number of pieces per day) is to be maintained. Product weights of up to 240 kips can be hauled with currently available equipment at a limited rate.

Long span prestressed concrete girder bridges may bear increased costs due to difficulties encountered during the fabrication, shipping, and erection of such long one-piece girders. Providing an alternate spliced-girder design to long span one-piece pretensioned girders may eliminate the excessive cost through competitive bidding. The following procedure for alternative design of prestressed concrete girders in the Plans shall be followed:

- All prestressed concrete girders with shipping weight less than 190 kips shall be pre-tensioned only (no alternative design.).
- All prestressed concrete girders with shipping weight between 190 and 240 kips shall include both pretensioned and post-tensioned spliced prestressed concrete girder alternatives as part of the PS&E, with post-tensioning to be applied before the casting of deck slab. Post-tensioning may be applied after the casting of deck slab at the option of the Contractor with approval of the designer of record.
- All prestressed concrete girders with shipping weight exceeding 240 kips shall be spliced prestressed concrete girders, with post-tensioning applied after the casting of the girder closures and deck slab.

When a spliced prestressed concrete girder alternative is presented in the Plans, the substructure shall be design and detailed for the maximum force effect case only (no alternative design for substructure).

Local carriers should be consulted on the feasibility of shipping heavy girders on specific projects.

4. Length Limitations

   Length limitations are generally governed by turning radii on the route to the jobsite. Potential problems can be circumvented by moving the support points closer together (away from the ends of the girder), or by selecting alternate routes. A rule of thumb of 130 feet between supports is commonly used. The support points can be moved away from the ends while still maintaining the concrete stresses within allowable limits. Length limitations are not expected to be the governing factor for most project locations.

5. Height Limitations

   The height of a deep girder section sitting on a jeep and steerable trailer is of concern when considering overhead obstructions on the route to the jobsite. The height of the support is approximately 6 feet above the roadway surface. When adding the depth of the girder, including camber, the overall height from the roadway surface to the top of concrete can rapidly approach 14 feet. Overhead obstructions along the route should be investigated for adequate clearance in the preliminary design phase. Obstructions without adequate clearance must be bypassed by selecting alternate routes.

   Expectations are that, in some cases, overhead clearance will not accommodate the vertical stirrup projection on deeper WSDOT standard girder sections. Alternate stirrup configurations can be used to attain adequate clearance, depending on the route from the plant to the jobsite.

6. Lateral Stability During Shipping

   Long, slender members can become unstable when supported near the ends. However, the stability of girders sitting on flexible supports is governed by the rotational stiffness of the support rather than the girder. Recommended factors of safety 1.0 against cracking, and 1.5 against failure (rollover of the truck) should be used.

   The control against cracking the top flange is obtained by introducing the number of temporary top strands, jacked to the same load as the permanent strands, required to provide a factor of safety of 1.0. This variable depends on the combination of girder dead load, pre-stressing, and tension in the top flange induced by the girder tilt. The calculated tilt includes both the superelevation and its magnification based on the truck's rotational stiffness.

   For stability analysis of prestressed girders during shipping, in absence of more accurate information, the following parameters shall be used:

   a. Roll stiffness of truck/trailer = $28{,}000\frac{kip-in}{rad} \le K_a\left[\frac{W_g}{W_a}\right]$

      Where

      $K_a = 4000\frac{kip-in}{rad-axle}$

      W_g = girder weight

      W_a = 18 kip/axle

   b. Height of girder bottom above roadway = 72 in

   c. Height of truck roll center above road = 24 in

d. Center to center distance between truck tires = 72 in

e. Maximum expected roadway superelevation = 0.06

f. Maximum girder sweep tolerance = 0.001042 in/in

g. Support placement lateral tolerance = 1 in

h. Increase girder C.G. height for camber by 2%

i. Maximum distance between truck supports = 130ft

E. Erection

A variety of methods are used to erect precast concrete girders, depending on the weight, length, available crane capacity, and site access. Lifting long girders during erection is not as critical as when they are stripped from the forms, particularly when the same lifting devices are used for both. However, if a separate set of erection devices are used, the girder should be checked for stresses and lateral stability. In addition, once the girder is set in place, the free span between supports is usually increased. Wind can also pose a problem. Consequently, when long girders are erected, they should immediately be braced at the ends. Generally, the temporary support of the girders is the contractor's responsibility.

F. Construction Sequence for Multi-Span Prestressed Girder Bridges

For multi-span prestressed girder bridges, the sequence and timing of the superstructure construction has a significant impact on the performance and durability of the bridge. In order to maximize the performance and durability, the "construction sequence" details shown on the attached sheets shall be followed for all new WSDOT multi-span prestressed girder bridges. Particular attention shall be paid to the timing of casting the lower portion of the pier diaphragms/ crossbeams (30 days minimum after release of prestress) and the upper portion of the diaphragms/ crossbeams (10 days minimum after placement of the roadway slab). The requirements apply to multi-span prestressed girder bridges with monolithic and hinge diaphragms/crossbeams.

5.6.4 Superstructure Optimization

A. Girder Selection

Cost of the girders is a major portion of the cost of prestressed girder bridges. Much care is therefore warranted in the selection of girders and in optimizing their position within the structure. The following general guidelines should be considered.

1. Girder Series Selection

All girders in a bridge shall be of the same series unless approved otherwise by the Bridge & Structures Engineer. If vertical clearance is no problem, a larger girder series, utilizing fewer girder lines, may be a desirable solution. This must be balanced with considerations such as appearance. The relative girder series cost factors shown in Table 5.6.4-1 may be used as a guide for this decision:

The wider spacing expected when using larger series girders may result in extra reinforcement and concrete but less forming cost. These items must also be considered.

2. Girder Concrete Strength

Higher girder concrete strengths should be specified where that strength can be effectively used to reduce the number of girder lines, see Section 5.1.1.A-2. When the bridge consists of a large number of spans, consideration should be given to using a more exact analysis than the usual design program in an attempt to reduce the number of girder lines. This analysis should take into account actual live load, creep, and shrinkage stresses in the girders.

Type	Depth in	Unit Weight k/ft	Max. Span ft	Relative Cost Factor	Fabrication Cost Range		Final In-Place Cost**
W42G	42.00	0.424	85	0.75	$85	$90	$200
W50G	50.00	0.585	110	0.83	$95	$100	$220
W58G	58.00	0.672	125	0.92	$105	$110	$240
W74G	73.50	0.831	150	1.00*	$115	$120	$250
WF42G	42.00	0.806	115	1.35	$150	$155	$250
WF50G	50.00	0.859	130	1.44	$160	$165	$275
WF58G	58.00	0.913	145	1.52	$170	$175	$300
WF74G	74.00	1.020	165	1.61	$180	$185	$325
WF83G	82.61	1.087	175	1.70	$190	$195	$350
WF95G	94.49	1.167	160	2.00	$200	$230	$400
W32BTG	32.00	0.598	75	1.57	$150	$180	$250
W38BTG	38.00	0.638	90	1.61	$155	$185	$275
W62BTG	62.00	0.798	130	1.74	$170	$200	$300
U54G4	54.00	1.154	130	3.40	$290	$390	$500
U54G5	54.00	1.234	130	3.44	$295	$395	$510
U54G6	54.00	1.394	120	3.48	$300	$400	$520
U66G4	66.00	1.343	155	3.44	$295	$395	$530
U66G5	66.00	1.423	150	3.48	$300	$400	$540
U66G6	66.00	1.583	145	3.53	$305	$405	$560
U78G4	78.00	1.531	170	3.70	$325	$425	$570
U78G5	78.00	1.611	170	3.79	$335	$435	$580
U78G6	78.00	1.771	165	3.88	$345	$445	$660
UF60G4	60.00	1.342	150	3.48	$300	$400	$520
UF60G5	60.00	1.422	150	3.53	$305	$405	$530
UF60G6	60.00	1.582	135	3.57	$310	$410	$540
UF72G4	72.00	1.530	165	3.62	$315	$415	$550
UF72G5	72.00	1.610	170	3.66	$320	$420	$560
UF72G6	72.00	1.770	160	3.70	$325	$425	$570
UF84G4	84.00	1.719	190	3.96	$355	$455	$580
UF84G5	84.00	1.799	185	4.05	$365	$465	$590
UF84G6	84.00	1.959	170	4.14	$375	$475	$600
WF74PTG	74.00	1.173	175	1.31	$120	$150	$250
WF83PTG	82.61	1.250	205	1.35	$130	$155	$260
WF95PTG	94.49	1.354	235	1.31	$145	$150	$270

* W74G is used as basis for relative cost analysis

** The final In-Place Cost is based on 1.15 x Fabrication Cost. Producers should be consulted for shipping circumstances

Precast Prestressed Girder Cost Estimate (Per Linear Foot)

Table 5.6.4-1

3. Girder Spacing

   Consideration must be given to the slab cantilever length to determine the most economical girder spacing. This matter is discussed in Section 5.6.4.B. The slab cantilever length should be made a maximum if a line of girders can be saved. It is recommended that the overhang length, from edge of slab to center line of exterior girder, be less than 40% of girder spacing; then the exterior girder can use the same design as that of the interior girder. Once the positions of the exterior girders have been set, the positions and lengths of interior girders can be established. The following guidance is suggested.

   a. Straight Spans

      On straight constant width roadways, all girders should be parallel to bridge centerline and girder spacing should be equal.

   b. Tapered Spans

      On tapered roadways, the minimum number of girder lines should be determined as if all girder spaces were to be equally flared. As many girders as possible, within the limitations of girder capacity should be placed. Slab thickness may have to be increased in some locations in order to accomplish this.

   c. Curved Spans

      On curved roadways, normally all girders will be parallel to each other. It is critical that the exterior girders are positioned properly in this case, as described in Subsection 5.6.4.B.

   d. Geometrically Complex Spans

      Spans which are combinations of taper and curves will require especially careful consideration in order to develop the most effective and economical girder arrangement. Where possible, girder lengths and numbers of straight and harped strands should be made the same for as many girders as possible in each span.

   e. Number of Girders in a Span

      Usually all spans will have the same number of girders. Where aesthetics of the underside of the bridge is not a factor and where a girder can be saved in a short side span, consideration should be given to using unequal numbers of girders. It should be noted that this will complicate crossbeam design by introducing torsion effects and that additional reinforcement will be required in the crossbeam.

B. Slab Cantilevers

The selection of the location of the exterior girders with respect to the curb line of a bridge is a critical factor in the development of the framing plan. This location is established by setting the curb distance, which is that dimension from centerline of the exterior girder to the adjacent curb line. For straight bridges, the distance between the edge of girder and the curb will normally be no less than 2′–6″ for W42G, W50G, and W58G; 3′–0″ for W74G; and 3′–6″ for WF74G, WF83G, and WF95G. Some considerations which affect this are noted below.

1. Appearance

   In the past, some prestressed girder bridges have been designed by placing the exterior girders directly under the curb (traffic barrier). This gives a very poor bridge appearance and is uneconomical. Normally, for best appearance, the largest slab overhang which is practical should be used.

2. Economy

   Fortunately, the condition tending toward best appearance is also that which will normally give maximum economy. Larger curb distances may mean that a line of girders can be eliminated, especially when combined with higher girder concrete strengths.

3. Slab Strength

   This is one of the governing conditions which limits the maximum practical curb distance. It must be noted that for larger overhangs, the slab section between the exterior and the first interior girder may be critical and may require thickening. In some cases, live load moments which produce transverse bending in the exterior girder should be considered.

4. Drainage

   Where drainage for the bridge is required, water from bridge drains is normally piped across the top of the girder and dropped inside of the exterior girder line. A large slab cantilever length may severely affect this arrangement and it must be considered when determining exterior girder location.

5. Bridge Curvature

   When straight prestressed girders are used to support curved roadways, the curb distance must vary. Normally, the maximum slab overhang at the centerline of the long span will be made approximately equal to the overhang at the piers on the inside of the curve. At the point of minimum curb distance, however, the edge of the girder top surface should be no closer than 1'-0" from the slab edge. Where curvature is extreme and the difference between maximum and minimum curb distance becomes large, other types of bridges should be considered. Straight girder bridges on highly curved alignments have a poor appearance and also tend to become structurally less efficient.

C. Diaphragm Requirements

1. General

   Diaphragms used with prestressed girder bridges serve two purposes. During the construction stage, the diaphragms provide girder stability for pouring the slab. During the life of the bridge, the diaphragms act as load distributing elements, and are particularly advantageous for distribution of large overloads. Standard diaphragms and diaphragm spacings are given in the office standards for prestressed girder bridges. Diaphragms that fall within the limitations stated on the office standards need not be analyzed. Where large girder spacings are to be used or other unusual conditions exist, special diaphragm designs should be performed.

2. Design

   Diaphragms shall be designed as transverse beam elements carrying both dead load and live load. Wheel loads for design shall be placed in positions so as to develop maximum moments and maximum shears.

3. Geometry

   Diaphragms shall normally be oriented parallel to skew (as opposed to normal to girder centerlines). This procedure has the following advantages:

   a. The build-up of higher stresses at the obtuse corners of a skewed span is minimized. This build-up has often been ignored in design.

b. Skewed diaphragms are connected at points of approximately equal girder deflections and thus tend to distribute load to the girders in a manner which more closely duplicates design assumptions.

On curved bridges, diaphragms shall normally be placed on radial lines.

D. Skew Effects

Skew in prestressed girder bridges affects structural behavior and member analysis and complicates construction.

1. Analysis

Normally, the effect of skew on girder analysis is ignored. It is assumed that skew has little structural effect on normal spans and normal skews. For short, wide spans and for extreme skews (values over 50 degrees), the effect of the skew on structural action should be investigated. All short span prestressed slabs, tri-beams, and bulb-tee girders have a skew restriction of 30 degrees.

2. Detailing

To minimize labor costs and to avoid stress problems in prestressed girder construction, the ends of girders for continuous spans shall normally be made skewed. When girder ends are skewed, the angle of the girder end should be rounded to the nearest 5 degrees. If this causes problems where the girder extends into the crossbeam, the angle can be specified to the nearest degree. Skew ends of prestressed girders shall always match the piers they rest on at either end.

E. Grade and Cross Slope Effects

Large cross slopes require an increased amount of the girder pad dimension (‘A’ dimension) necessary to ensure that the structure can be built. This effect is especially pronounced if the bridge is on a horizontal or vertical curve. Care must be taken that deck drainage details reflect the cross slope effect. Girder lengths may need to be modified to correct for added length along slope. Remember that the girder is a rectangle in elevation; thus, the position of the girder top corner is affected by grade, girder camber, and tolerances. Details must account for this.

F. Curve Effect and Flare Effect

Curves and tapered roadways each tend to complicate the design of straight girders. The designer must determine what girder spacing to use for dead load and live load design and whether or not a refined analysis, that considers actual load application, is warranted. Normally, the girder spacing at centerline of span can be used for girder design, especially in view of the conservative assumptions made for the design of continuous girders.

5.6.5 Repair of Damaged Girders at Fabrication

This section pertains only to girders which have been damaged before becoming part of a final structure. Repair of damaged girders in existing bridges is covered in Section 5.6.6.

A. Repairs to Girders Prior to Strand Release

When girders suffer defects during casting or damage prior to strand release, the repair procedures are documented in reference 21. Normally, no designer action is required. In prescribing repairs for unusual situations not covered in reference 21, the designer must ensure that the required strength and appearance of the girder can be maintained. Since stressing will occur after the repair is made, normally no test loading is required; however, such a test should be considered.

5.6.6 Repair of Damaged Bridge Girders

A. General

This section is intended to cover repair of damaged girders on existing bridges. For repair of newly constructed girders, see Section 5.6.5. Overheight loads are a fairly common source of damage to prestressed girder bridges. The damage may range from spalling and minor cracking of the lower flange of the girder to loss of a major portion of a girder section. Occasionally, one or more strands may be broken. The damage is most often inflicted on the exterior or first interior girder.

B. Repair Procedure

The determination of the degree of damage to a prestressed girder is largely a matter of judgment. Where the flange area has been reduced or strands lost, calculations can aid in making this judgment decision. The following are general categories of damage and suggested repair procedures[22,23].

1. Minor Damage

If the damage is slight and concerns only spalling of small areas of the outside surface of the concrete, repair may be accomplished by replacing damaged concrete areas with concrete grout. The area where new concrete is to be applied shall first be thoroughly cleaned of loose material, dried, and then coated with epoxy.

2. Moderate Damage

If damage is moderate, consisting of loss of a substantial portion of the flange and possibly loss of one or more strands, a repair procedure must be developed using the following guidelines. It is probable that some prestress will have been lost in the damaged area due to reduction in section and consequent strand shortening or through loss of strands. The following repair procedure is recommended to assure that as much of the original girder strength as possible is retained:

a. Determine Condition

Sketch the remaining cross section of the girder and compute its reduced section properties. Determine the stress in the damaged girder due to the remaining prestress and loads in the damaged state. If severe overstresses are found, action must be taken to restrict loads on the structure until the repair has been completed. If the strand loss is so great that AASHTO prestress requirements cannot be met with the remaining strands, consideration should be given to replacing the girder.

b. Restore Prestress If Needed

If it is determined that prestress must be restored, determine the stress in the bottom fiber of the girder as originally designed due to DL + LL + I + Prestress. (This will normally be about zero psi). Determine the additional load (P) that, when applied to the damaged girder in its existing condition, will result in this same stress. Take into account the reduced girder section, the effective composite section, and any reduced prestress due to strand loss. Should the damage occur outside of the middle one-third of the span length, the shear stress with the load (P) applied should also be computed. Where strands are broken, consideration should be given to coupling and jacking them to restore their prestress.

c. Prepare a Repair Plan

Draw a sketch to show how the above load is to be applied and specify that the damaged area is to be thoroughly prepared, coated with epoxy, and repaired with grout equal in strength to the original concrete. Specify that this load is to remain in place until the grout has obtained sufficient strength. The effect of this load is to restore lost prestress to the strands which have been exposed.

d. Test Load

Consideration should be given to testing the repaired girder with a load equivalent to 1.0DL + 1.5(LL+IM). The LL Live Load for test load is HL-93.

3. Severe Damage

Where the damage to the girder is considered to be irreparable due to loss of many strands, extreme cracking, etc., the girder may need to be replaced. This has been done several times, but involves some care in determining a proper repair sequence.

In general, the procedure consists of cutting through the existing slab and diaphragms and removing the damaged girder. Adequate exposed reinforcement steel must remain to allow splicing of the new bars. The new girder and new reinforcement is placed and previously cut concrete surfaces are cleaned and coated with epoxy. New slab and diaphragm portions are then poured.

It is important that the camber of the new girder be matched with that in the old girders. Excessive camber in the new girder can result in inadequate slab thickness. Girder camber can be controlled by prestress, curing time, or dimensional changes.

Pouring the new slab and diaphragms simultaneously in order to avoid overloading the existing girders in the structure should be considered. Extra bracing of the girder at the time of slab pour should be required.

Methods of construction should be specified in the plans that will minimize inconvenience and dangers to the public while achieving a satisfactory structural result. High early strength grouts and concretes should be considered.

4. Repair vs. Replacement of Damaged Girder

Several factors need to be considered when evaluating whether to repair or to replace a damaged girder. Among them are the level of concrete damage, number of broken strands, location and magnitude of web damage, permanent offset of the original girder alignment, and overall structural integrity. Other considerations include fresh damage to previously damaged girders, damage to adjacent girders, and cost of repair versus replacement. Ultimately, the evaluation hinges on whether the girder can be restored to its original capacity and whether the girder can be repaired sufficiently to carry its share of the original load.

The following guidelines describe damaged girder conditions which require replacement:

- ***Strand Damage:*** More than 25% of prestressing strands are damaged/severed. If over 25% of the strands have been severed, replacement is required. Splicing is routinely done to repair severed strands. However, there are practical limits as to the number of couplers that can be installed in the damaged area.
- ***Girder Displacements:*** The bottom flange is displaced from the horizontal position more than ½″ per 10′ of girder length. If the alignment of the girder has been permanently altered by the impact, replacement is required. Examples of non-repairable girder displacement include cracks at the web/flange interface that remain open. Abrupt lateral offsets may indicate that stirrups have yielded. A girder that is permanently offset may not be restorable to its original geometric tolerance by practical and cost-effective means.

- **Concrete Damage at harping point:** Concrete damage at harping point resulting in permanent loss of prestress. Extreme cracking or major loss of concrete near the harping point may indicate a change in strand geometry and loss in prestress force. Such loss of prestress force in the existing damaged girder cannot be restored by practical and cost-effective means, and requires girder replacement.
- **Concrete Damage at girder ends:** Severe concrete damage at girder ends resulting in permanent loss of prestress. Extreme cracking or major loss of concrete near the end of a girder may indicate unbonding of strands and loss in prestress force. Such loss of prestress force in the existing damaged girder cannot be restored by practical and cost-effective means, and requires girder replacement.

There are other situations as listed below which do not automatically trigger replacement, but require further consideration and analysis.

- ***Adjacent Girders:*** Capacity of adjacent undamaged girders. Consideration must be given as to whether dead load from the damaged girder has been shed to the adjacent girders and whether the adjacent girders can accommodate the additional load.
- ***Damaged Adjacent Girders:*** Damage to adjacent girders. Replacement may also be warranted if the adjacent girders have been damaged from this or previous impact and have reduced capacity.
- ***Previously-damaged Girders:*** Damage to a previously damaged girder. An impact to a girder that has been previously repaired may not be able to be restored to sufficient capacity. (Otherwise it sounds like it a fabricated defect and hence was a contributing factor to it's inability for re-use or repair.)
- ***Cost:*** Cost of repair versus replacement. Replacement may be warranted if the cost of repair reaches 70% of the replacement project cost.

C. Miscellaneous References

Some of the girder replacement contracts which have been completed are:

C-9593 Columbia Center IC Br. 12/432 Repair (Simple Span)
C-9593 16th Avenue IC Br. 12/344 Repair (Continuous Span)
C-9446 Mae Valley U Xing (Simple Span)
KD-2488 13th Street O Xing 5/220 (Northwest Region)
KD-2488 SR 506 U Xing 506/108 (Northwest Region)
SR 12 U Xing 12/118 (Northwest Region)
C-5328 Bridge 5/411 NCD (Continuous Span)
KD-2976 Chamber of Commerce Way Bridge 5/227
KD-20080 Golder Givens Road Bridge 512/10
KD-2154 Anderson Hill Road Bridge 3/130W

These and other similar jobs should be used for guidance.

5.6.7 Short Span Precast Prestressed Bridges

A. General

To expedite scheduling and promote economy in building short span bridges, the WSDOT's Bridge Design Office developed standards for short span bridges (range 12 to 70 feet for length of spans). A small bridge program was developed in 1983. A National Cooperative Highway Research Program Report (NCHRP) No. 287, entitled Load Distribution and Connection Design for Precast Stemmed Multibeam Bridge Superstructures was utilized to obtain the most effective keyway geometry between adjacent beam for shear transfer and live load distribution to the girders. These type of bridges are used only for low ADT roads.

B. Precast Prestressed Slabs

The slab sections utilize low relaxation prestressing strands and are connected together permanently with transverse weld tie and keyway. The following are recommendations for the type of precast slab sections to be used for various span lengths:

1. 1′-0″ depth precast section. This section is capable of spanning between 15 to 35 feet.
2. 1′-6″ depth voided precast section. This section is capable of spanning between 30 to 50 feet.
3. 2′-2″ depth voided precast section. This section is capable of spanning between 40 to 70 feet.

C. Precast Prestressed Double-Tee or Ribbed Deck Girders

Double-Tee and Ribbed Deck sections are available as an option to the slab spans. These sections is capable of spanning 25 to 70 feet.

D. Prestressed Concrete Deck Bulb-Tee Girders

Deck bulb-tee girders are also available as an option to the slab sections. Precast fabricators often prefer deck bulb-tee girders because voided slabs are less efficient sections. We have developed four standard sections while working closely with local fabricator requirements or constraints. 65-inch, 53-inch, 41 inch, and a 35-inch deep bulb-tee girders are used by the state of Washington 4-foot, 5-foot, and 6-foot wide or variable width deck.

5.6.8 Prestressed Concrete Precast Tub Girders

For moderate bridge spans of up to 140 feet, prestressed concrete tub girders are generally used. These are in the form of U-sections called bath-tubs. Prestressed concrete tub girders made with light weight concrete may be used for spans up to 170 feet.

5.6.9 Prestressed Girder Checking Requirement

1. Shear reinforcing size and spacing beyond the end region of the girder shall be determined by the designer. It is uneconomical to provide a standard pattern to cover all span and girder spacing arrangements.
2. Determine lifting location and required concrete transfer strength to provide adequate stability during handling. The lifting bar location, concrete release strength, and “A” dimension should be checked if temporary strands are used. Generally the temporary strands provide additional stability for lifting and transportation, and reduce the camber. Less camber allows for less “A” dimension and concrete pad dead weight on the structure. Temporary strands are assumed to be cut after all intermediate diaphragms are cast and cured, but before the cast-in-place deck is placed.
3. Due to the extreme depth of the WF83G and WF95G girders, and possible tilt at the piers for profile grades, the designer will need to pay particular attention to details to assure the girders will fit and perform as intended. Girder data required to be placed in the table on Girder Detail plans include the girder identifiers, “A” dimension, end types, girder geometric data, and strand forces and pattern required.
4. Check edge distance of supporting cross beam.
5. For continuous bridges, design girders as simple spans for live load (Do not deduct negative moments from maximum simple beam positive moments).
6. Provide reinforcement in the deck for negative moments at intermediate piers due to live loads and superimposed dead loads from traffic barrier, pedestrian walkway, utilities, etc.

5.6.10 Review of shop plans for pretensioned girders

Pretensioning shop drawings should be reviewed by the designer if necessary. Shop drawings, after reviewed by the design engineer should be stamped with the official rubber seal and returned to the bridge construction support office. Review of shop drawing must include:

1. All prestressing strands should be of ½" or 0.6" diameter grade 270 low relaxation uncoated strands.
2. Number of strands per girder shall be specified in the shop drawings and should conform to the contract plans.
3. Stresses Prestressing strands shall not exceed $0.75f_{pu}$.
4. Strand placement patterns and harping points should be verified per contract plans.
5. Temporary Strand pattern, bonded length, location and size of blockouts for cutting strands should be verified per contract plans.
6. Procedure for cutting temporary strands and patching the blockouts should be specified.
7. Number and length of extended strands and rebars at girder ends shall be verified per contract plans.
8. Location of holes and shear keys for intermediate and end diaphragms shall be verified per contract plans.
9. Location and size of bearing recesses shall be verified per contract plans.
10. Saw tooth at girder ends shall be verified per contract plans.
11. Location and size of lifting loops or lifting bars shall be verified per contract plans.
12. All horizontal and vertical reinforcement shall be verified per contract plans.
13. Girder length and end skew shall be verified per contract plans.

5.7 Roadway Slab

The following information is intended to provide guidance for slab thickness and transverse and longitudinal reinforcement of roadway slab. Information on deck deterioration prevention systems is Section 5.7.4.

5.7.1 Roadway Slab Requirements

A. Slab Thickness

Slab thickness for prestressed girder bridges shall be taken as shown in Table 5.7.2-2.

The minimum slab thickness is established in order to ensure that overloads on the bridge will not result in premature slab cracking.

B. Computation of Slab Strength

The thickness for usual slabs are shown in Figure 5.7.1-1 and Figure 5.7.1-2. The slab design span and thickness are defined in Table 5.7.2-2

The thickness of the slab and reinforcement in the area of the cantilever may be governed by traffic barrier loading. Wheel loads plus dead load shall be resisted by the sections shown in Figure 5.7.1-2.

Design of the cantilever is normally based on the expected depth of slab at centerline of girder span. This is usually less than the dimensions at the girder ends.

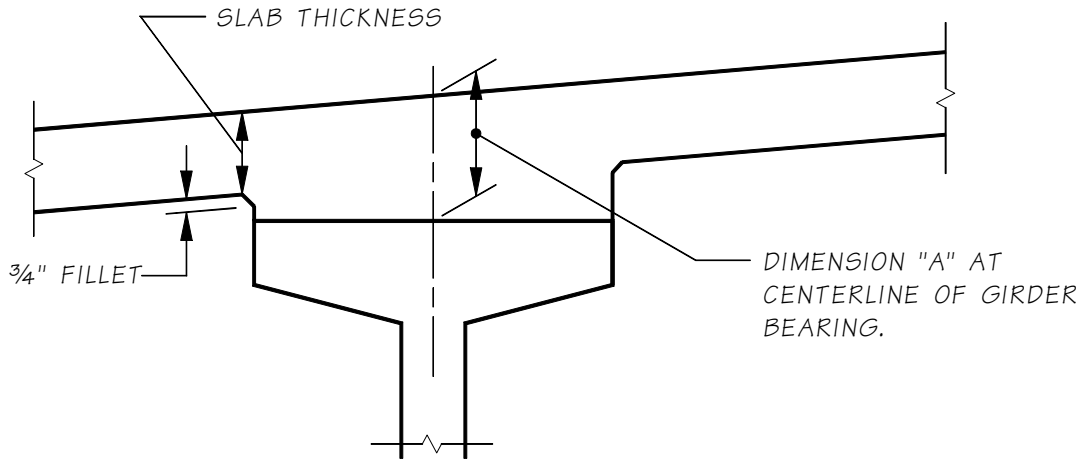

Depths for Slab Design at Centerline of Girder Span

Figure 5.7.1-1

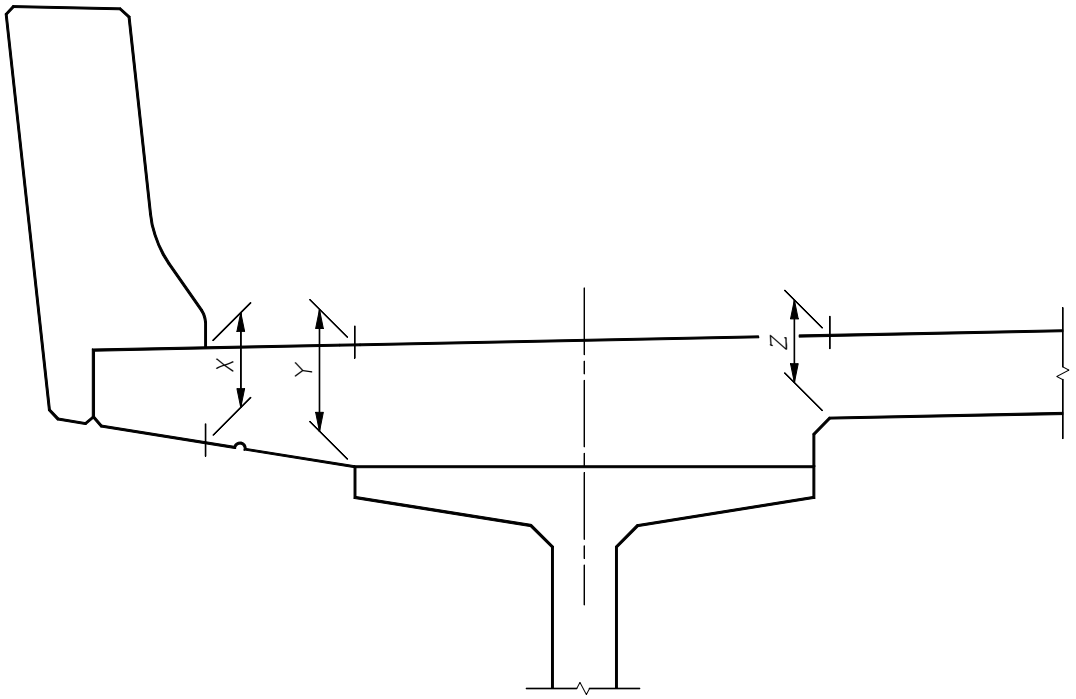

Depths for Slab Design at Deck Overhang
Figure 5.7.1-2

C. Computation of "A" Dimension

The distance from the top of the slab to the top of the girder at centerline bearing is represented by the "A" Dimension. It is calculated in accordance with the guidance of Appendix B. This ensures that adequate allowance will be made for excess camber, transverse deck slopes, vertical and horizontal curvatures. Ideally the section at centerline of span will have the final geometry shown in Figure 5.7.1-1. Where temporary prestress strands at top of girder are used to control the girder stresses due to shipping and handling, the "A" dimension must be adjusted accordingly.

The note in left margin of the Layout Sheet should read: "A" Dimen. = X" (not for design).

5.7.2 Slab Reinforcement

A. Transverse Reinforcement

The size and spacing of transverse reinforcement may be governed by interior slab span design, cantilever design, or the requirements of traffic barrier load. Where traffic barrier load governs, short hooked bars may be added at the slab edge to increase the reinforcement available in that area. Top transverse reinforcement is always hooked at the slab edge unless a traffic barrier is not used. Top transverse reinforcement is preferably spliced at some point between girders in order to allow the clearance of the hooks to the slab edge forms to be properly adjusted in the field. Usually, the slab edge hooks will need to be tilted in order to place them. On larger bars, the clearance for the longitudinal bar through the hooks should be checked. Bottom transverse slab reinforcement is normally carried far enough to splice with the traffic barrier main reinforcement. Appendices 5.3-A5 through 5.3-A8 can be used to aid in selection of bar size and spacing.

For skewed spans, the transverse bars are placed normal to bridge centerline and the areas near the expansion joints and bridge ends are reinforced by partial length bars. For raised crossbeam bridges, the bottom transverse slab reinforcement is discontinued at the crossbeam.

The spacing of bars over the crossbeam must be detailed to be open enough to allow concrete to be poured into the crossbeam. For typical requirements, see Section 5.3.3.D.

For slabs with a crowned roadway, the bottom surface and rebar of the slab should be flat, as shown in Figure 5.7.2-1.

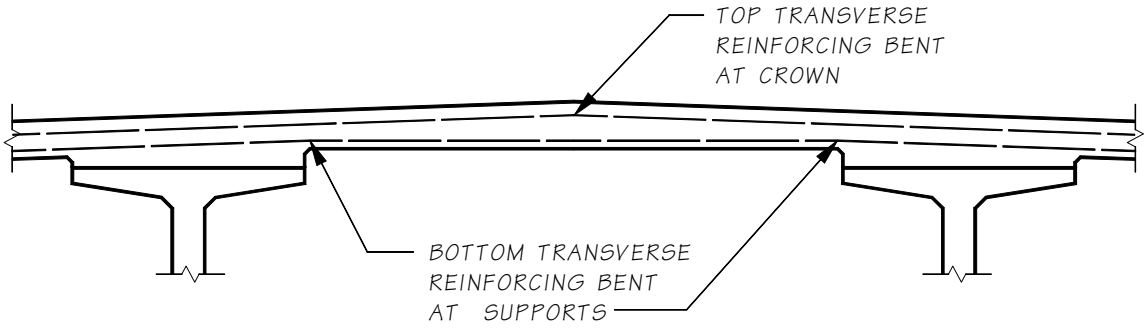

Bottom of Top Slab at Crown Point
Figure 5.7.2-1

B. Longitudinal Reinforcement

This section discusses reinforcement requirements for resistance of longitudinal moments in continuous multi-span precast girder bridges and is limited to reinforcement in the top slab since capacity for resisting positive moment is provided by the prestressing of the girders.

1. Simple Spans

For simple span bridges, longitudinal slab reinforcement is not required to resist negative moments and therefore the reinforcement requirements are nominal. Figure 5.7.2-2 defines longitudinal reinforcement requirements for these slabs. The bottom longitudinal reinforcement is defined by AASHTO LRFD 9.7.3.2 requirements for distribution reinforcement. The top longitudinal reinforcement is based on current office practice. The requirements of Distribution of Flexural Reinforcement of LRFD 5.7.3.4 do not apply to these bars.

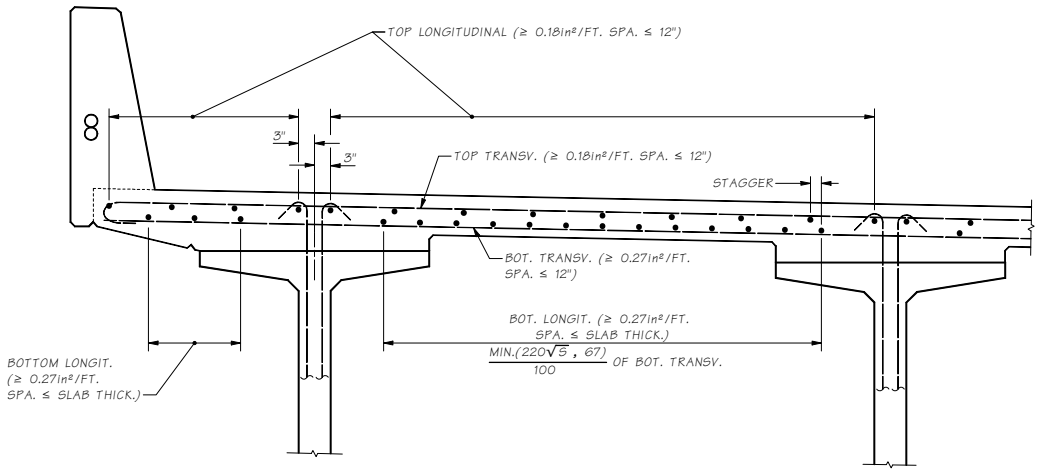

Nominal Longitudinal Slab Reinforcement
Figure 5.7.2-2

2. Continuous Spans

Longitudinal reinforcement of continuous spans at intermediate support is dominated by the moment requirement. Where these bars are cut off, they are lapped by the nominal top longitudinal reinforcement described in Subsection 5.7.2D. Minimum sub thickness is shown in Table 5.7.2-1.

C. Distribution of Flexural Reinforcement

The provision of LRFD Section 5.7.3.4 for class 2 exposure condition shall be satisfies.

1. Prestressed Girders Designed as Simple Spans

For bridges designed using the "Prestressed Girder Design" program, "distribution reinforcement" need not be added to the area of steel required to resist the negative moments. The bars in the bottom layer, however, shall provide an area not less than that required for distribution reinforcement.

2. Other Prestressed Girder Bridges

   On bridges where the effect of continuity is taken into account to reduce moments for girder design, additional longitudinal steel shall be provided as "distribution reinforcement." The sum of the areas in both layers of longitudinal bars shall be equal to the area required to resist negative moments plus the area required by the AASHTO specification for "distribution reinforcement." Equal area of reinforcement shall be used in the top and bottom layers throughout the negative moment region. The total area of steel required in the bottom longitudinal layer shall not be less than that required for "distribution reinforcement."

   The minimum clearance between top and bottom bars should be 1″. Table 5.7.2-1 shows required slab thickness for various bar combinations. Table 5.7.2-2 shows the minimum slab thickness for different types of prestresses girders.

Minimum Slab Thickness = 7″	Slab Thickness (Inches)		
	Transverse Bar		
Longitudinal Bar	**#5**	**#6**	**#7**
#4	7½	--	--
#5	7½	7½	7¾
#6	7½	7¾	8
#7	7¾	8	8¼
#8	8	8½	8¾
#9	8½	8¾	9
#10	8¾	--	--

Note:
Deduct ½″ from slab thickness shown in table when asphalt overlay is used and 1″ when concrete overlay is used. However, the minimum slab thickness shall be 7″ when overlay is used.

Minimum Slab Thickness for Various Bar Sizes
(Slab Without Overlay)
Table 5.7.2-1

Girder Type	Width of Top Flange (ft)	Web Thickness (in)	Web Spacing (ft)	Effective Girder Spacing (ft)	Minimum Slab Thickness (in)	Design Min. Slab Thickness (in)
W42G	1.250	6	5	4.13	7.50	7 1/2
			6	5.13	7.50	7 1/2
			7	6.13	7.50	7 1/2
			8	7.13	7.50	7 1/2
			9	8.13	7.50	7 1/2
			10	9.13	7.65	7 3/4
			11	10.13	8.05	8 1/4
			12	11.13	8.45	8 1/2
W50G	1.667	6	5	3.92	7.50	7 1/2
			6	4.92	7.50	7 1/2
			7	5.92	7.50	7 1/2
			8	6.92	7.50	7 1/2
			9	7.92	7.50	7 1/2
			10	8.92	7.57	7 3/4
			11	9.92	7.97	8
			12	10.92	8.37	8 1/2
W58G	2.083	6	5	3.71	7.50	7 1/2
			6	4.71	7.50	7 1/2
			7	5.71	7.50	7 1/2
			8	6.71	7.50	7 1/2
			9	7.71	7.50	7 1/2
			10	8.71	7.50	7 1/2
			11	9.71	7.88	8
			12	10.71	8.28	8 1/2
W74G	3.583	6	5	2.96	7.50	7 1/2
			6	3.96	7.50	7 1/2
			7	4.96	7.50	7 1/2
			8	5.96	7.50	7 1/2
			9	6.96	7.50	7 1/2
			10	7.96	7.50	7 1/2
			11	8.96	7.58	7 3/4
			12	9.96	7.98	8
WF42G, WF50G, WF58G, WF74G, WF83G, & WF95G	4.083	6 1/8	6	3.70	7.50	7 1/2
			7	4.70	7.50	7 1/2
			8	5.70	7.50	7 1/2
			9	6.70	7.50	7 1/2
			10	7.70	7.50	7 1/2
			11	8.70	7.50	7 1/2
			12	9.70	7.88	8
W32BTG, W38BTG, & W62BTG	4.083	6	5	2.71	7.50	7 1/2
			6	3.71	7.50	7 1/2
			7	4.71	7.50	7 1/2
			8	5.71	7.50	7 1/2
			9	6.71	7.50	7 1/2
			10	7.71	7.50	7 1/2
			11	8.71	7.50	7 1/2
			12	9.71	7.88	8
WF74PTG, WF83PTG, & WF95PTG	4.229	7 7/8	6	3.56	7.50	7 1/2
			8	5.56	7.50	7 1/2
			10	7.56	7.50	7 1/2
			12	9.56	7.82	8
			14	11.56	8.62	8 3/4
UF60G, UF72G, & UF84G	1.256	7	6	5.08	7.50	7 1/2
			7	6.08	7.50	7 1/2
			8	7.08	7.50	7 1/2
			9	8.08	7.50	7 1/2
			10	9.08	7.63	7 3/4
			11	10.08	8.03	8 1/4
			12	11.08	8.43	8 1/2

Minimum Slab Thickness for Prestressed Girder Bridges

Table 5.7.2-2

D. Bar Patterns

Figure 5.7.2-3 shows two typical top longitudinal reinforcing bar patterns. Care must be taken that bar lengths conform to the requirements of Table 5.1.2-2. Note that the reinforcement is distributed over a width equal to the girder spacing according to office practice and does not conform to AASHTO LRFD Specifications Section 9.7.3.2.

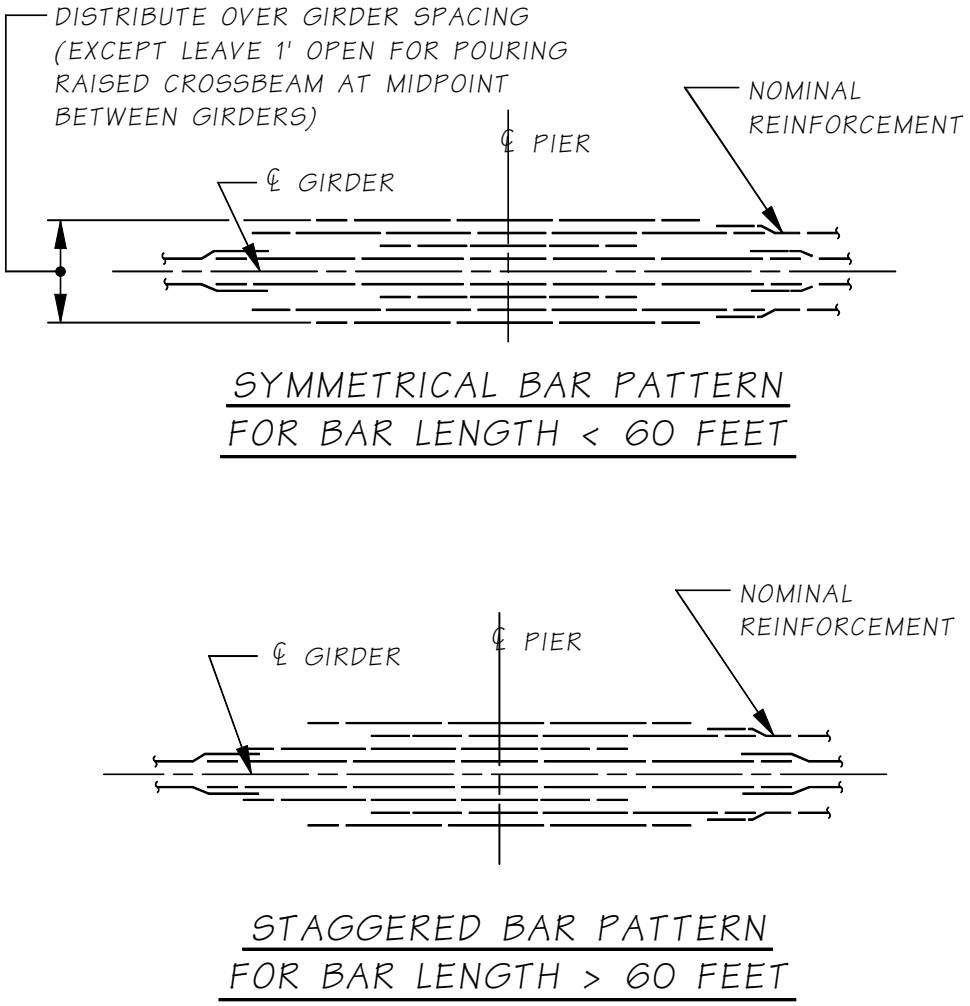

Staggered Bar Pattern
Figure 5.7.2-3

The symmetrical bar pattern shown should normally not be used when required bar lengths exceed 60 feet. If the staggered bar pattern will not result in bar lengths within the limits specified in Table 5.1.2-2, the method shown in Figure 5.7.2-4 may be used to provide an adequate splice. All bars shall be extended by their development length beyond the point where the bar is required.

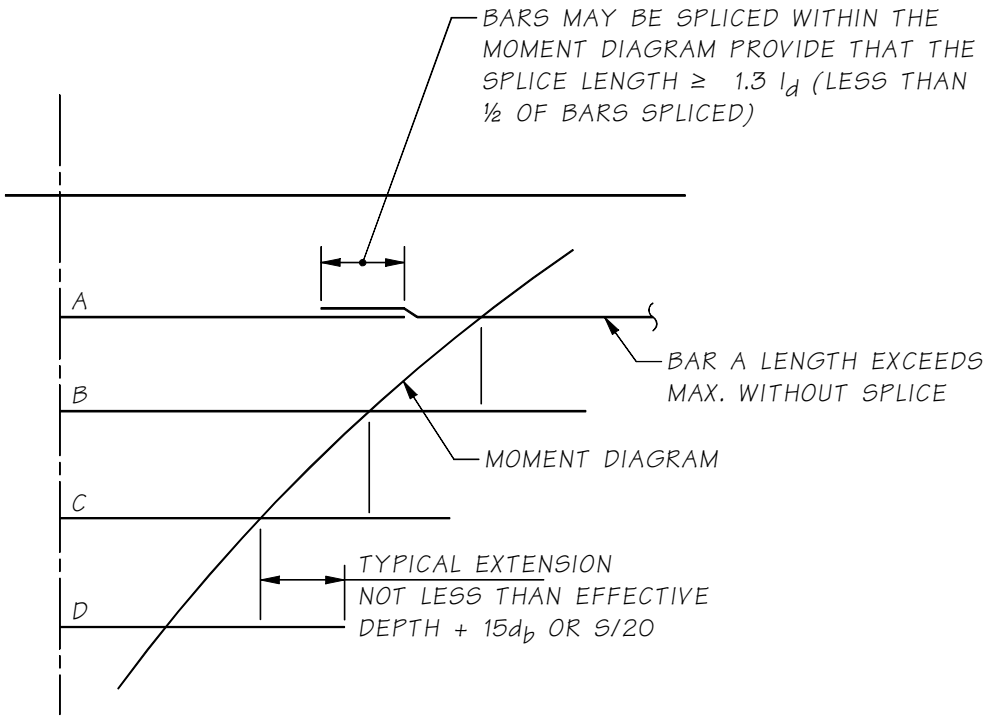

Bar Splice Within Moment Envelope
Figure 5.7.2-4

In all bar patterns, the reinforcement shall be well distributed between webs. Where this cannot be done without exceeding the 1′-0″ maximum spacing requirement, the nominal longitudinal bars may be extended through to provide the 1′-0″ maximum.

Normally, no more than 20% of the main reinforcing bars shall be cut off at one point. Where limiting this value to 20% leads to severe restrictions on the reinforcement pattern, an increase in figure may be considered. Two main reinforcement bars shall be carried through the positive moment area as stirrup hangers.

E. Recommendations for Concrete Deck Slab Detailing

These recommendations are primarily for beam-slab bridges with main reinforcement perpendicular to traffic.

- The minimum slab thickness including 0.5″ wearing surface shall be 7.5″ for concrete bridges, 8.0″ for steel girder bridges, and 8.5″ for concrete decks with S-I-P deck panels.
- Minimum cover over the top layer of reinforcements shall be 2.5″ including 0.5″ wearing surface. The minimum cover over the bottom layer reinforcement shall be 1.0″.
- Maximum bare size of #5 is preferred for all longitudinal and transverse reinforcements in deck slab except maximum bar size of #7 may be used for longitudinal reinforcements at intermediate piers.
- The minimum amount of reinforcement in each direction shall be 0.18 in.^{2}/ft for the top layer and 0.27 in.^{2}/ft for the bottom layer. The amount of longitudinal reinforcement in the bottom of slabs shall not be less than $220/\sqrt{S} \leq 67$ percent of the positive moment as specified in AASHTO LRFD 9.7.3.2.

- Top and bottom reinforcement in longitudinal direction of deck slab shall be staggered to allow better flow of concrete between the reinforcing bars.
- The maximum bar spacing in transverse and longitudinal directions for the top mat, and transverse direction of the bottom mat shall not exceed 12″. The maximum bar spacing for bottom longitudinal within the effective length, as specified in LRFD article 9.7.2.3, shall not exceed the deck thickness.
- For bridges with skew angle exceeding 25°, the amount of reinforcement in both primary and secondary direction shall be increased in the end zones.
- The construction joint with roughened surface in the slab at the intermediate pier diaphragm shall be specified instead of construction joint with shear key.
- Both, top and bottom layer reinforcement shall be considered when designing for negative moment at the intermediate piers.
- Reduce lap splices if possible. Use staggered lap splices for both top and bottom in longitudinal and transverse directions

5.7.3 Stay-In-Place Deck Panels

A. General

The use of stay-in-place (S-I-P) deck panels for bridge decks shall be investigated at the preliminary design stage. A minimum slab thickness of 8½", including 3½" precast deck panel and 5.0″ cast-in-place concrete topping, shall be specified for design if S-I-P deck panels are considered for the bridge deck. The acceptance evaluation will consider such items as extra weight for seismic design and the resulting substructure impacts.

The composite deck system consisting of precast prestressed concrete deck panels with a cast-in-place topping has advantages in minimizing traffic disruption, speeding up construction and solving constructability issues on certain projects. Contractors, in most cases, prefer this composite deck panel system for bridge decks in traffic congested areas and other specific cases.

Composite deck slab system consisting of S-I-P precast concrete deck panels combined with cast-in-place concrete topping may be used on WSDOT bridges upon Region's request and Bridge and Structures Office approval. Details for S-I-P deck panels are shown in Appendix 5.6-A18-1.

B. Design Criteria

The design of S-I-P deck panels follows the AASHTO LRFD Bridge Design Specifications and the PCI Bridge Design Manual. The design philosophy of S-I-P deck panels is identical to simple span prestressed girders. They are designed for Service Limit State and checked for Strength Limit State. The precast panels support the dead load of deck panels and C-I-P topping, and the composite S-I-P deck panel and C-I-P cross-section resists the live load. The tensile stress at the bottom of the panel is limited to zero per WSDOT design practice.

C. Limitation on S-I-P Deck Panels

The conventional full-depth cast-in-place deck slab continuous to be preferred by the Bridge and Structures Office for most applications. However, WSDOT allows the use of S-I-P Deck Panels upon Regions request and Bridge & Structures Office approval with the following limitations:

1. S-I-P Deck Panels shall not be used in Negative moment region of continuous conventionally reinforced bridges. S-I-P Deck Panels may be used in post-tensioned continuous bridges.
2. Bridge widening. S-I-P Deck Panels are not allowed in the bay adjacent to the existing structure because it is difficult to set the panels properly on the existing structure, and the requirement for C-I-P closure. S-I-P Deck Panels can be used on the other girders when the widening involves multiple girders.
3. Phased construction. S-I-P Deck Panels are not allowed in the bay adjacent to the previously placed deck because of the requirement for C-I-P closure.
4. Prestressed girders with narrow flanges. Placement of S-I-P Deck Panels on girders with flanges less than 12″ wide is difficult. The use of S-I-P Deck Panel shall be investigated at the preliminary design stage and proper flange width shall be considered.
5. A minimum slab thickness of 8.5″, including 3.5″ precast deck panel and 5″ C-I-P concrete topping shall be specified for design if S-I-P Deck Panels are considered for bridge deck.
6. S-I-P Deck Panels are not allowed for steel girder bridges. WSDOT's Bridge Design Engineer prefers to have a cast-in-place deck on steel girders.

5.7.4 Concrete Bridge Deck Protection Systems

A deck protection system shall be used in all projects involving concrete bridge deck construction or rehabilitation. For new bridge construction and widening projects, the type of system shall be determined by the Bridge Office Preliminary Plan and Bridge Management units during the preliminary plan stage and shall be shown on the preliminary plan in the left margin. For bridge deck rehabilitation and overlay projects, the Bridge Management Unit shall determine the type of system.

A. System Selection for New Structures

1. System 1 will be used for most New Bridges and Concrete Deck Replacements.
2. System 2 will be used on Segmentally Constructed Bridges with transverse post-tensioning in the deck. This system provides double protection to the post-tensioning system since restoration due to premature deck deterioration would be very costly. This system has been used on approximately 36 bridges to date that are located primarily on Interstate Routes.
3. System 3 will normally be used on bridges with precast Deck bulb "T" girders and Ribbed girders. The HMA with membrane provides a wearing surface and some protection to the connections between the girder or slab units.

B. Deck Overlay Selection for Bridge Widening and Existing Deck Rehabilitation

The Bridge Management Unit will recommend the type of overlay to be used on a bridge deck overlay project following discussions with the Region.

1. Epoxy-coated reinforcing will be specified in the new widened portion of the bridge.
2. The type of overlay on a deck widening shall be the same as the type used on the existing bridge. System 1 will be used on a deck widening if the existing deck does not have an overlay and no overlay is required.
3. There may be bridge widening cases when a modified concrete overlay is used on the existing bridge deck. The concrete deck profile in the widening may be constructed to match the profile of the modified concrete overlay. Contact the Bridge Preliminary Plan unit to determine if this detail applies for a bridge deck widening.
4. A modified concrete overlay will normally be used when one or both of the following criteria is met:
   a. Delaminated and patched areas of the existing concrete deck exceeding 2% of the total deck area.
   b. Exposed reinforcing steel is visible. This condition can exist on older bridges with significant traffic related wear.
5. An HMA with membrane overlay provides a short term wearing surface and low level of deck protection. This system may be used on bridges with existing HMA overlays that are to be removed and replaced.
6. Other Overlay types, such as a ¾″ Polyester or 1½″ Rapid Set LMC, are available in special cases on high ADT routes if rapid construction is needed.

C. Deck Protection Systems - New Bridges / Bridge Widenings / Bridge Deck Replacements

System 1: 2½″ of concrete cover over epoxy-coated reinforcing.

The concrete deck is cast-in-place with no overlay. The 2½″ of concrete cover includes a nominal depth for traction striations in the roadway surface and ¼″ tolerance for the placement of the reinforcing steel.

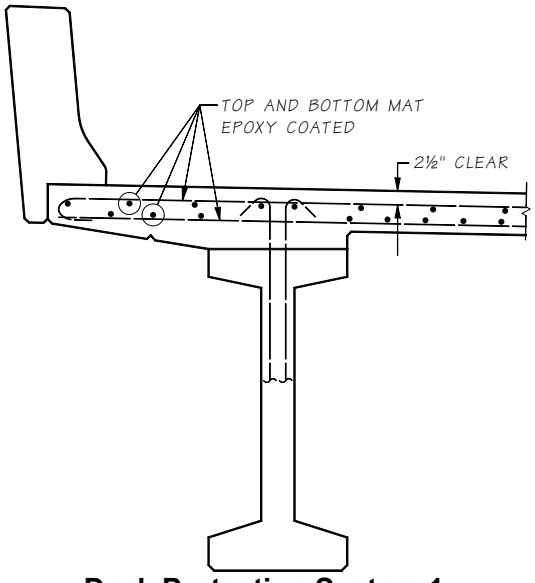

Deck Protection System 1
Figure 5.7.4-1

Only deck steel reinforcing mat and traffic barrier S1 bars are epoxy coated. See Figure 5.7.4-1.

System 2: 1¾″ of concrete cover over epoxy-coated top mat of deck reinforcing and a 1½″ Modified Concrete Overlay. See Figure 5.7.4-2

The concrete deck is cast-in-place. The top surface is built with 1¾" clear, then ¼" of the concrete deck surface is scarified prior to the placement of the 1½" Modified Concrete Overlay. The final nominal concrete cover over the top mat reinforcing is 3″. The type of modified concrete overlay will be specified in the contract special provisions. Generally, the contractor will be allowed to choose between Latex, Microsilica, or Fly Ash modified concrete.

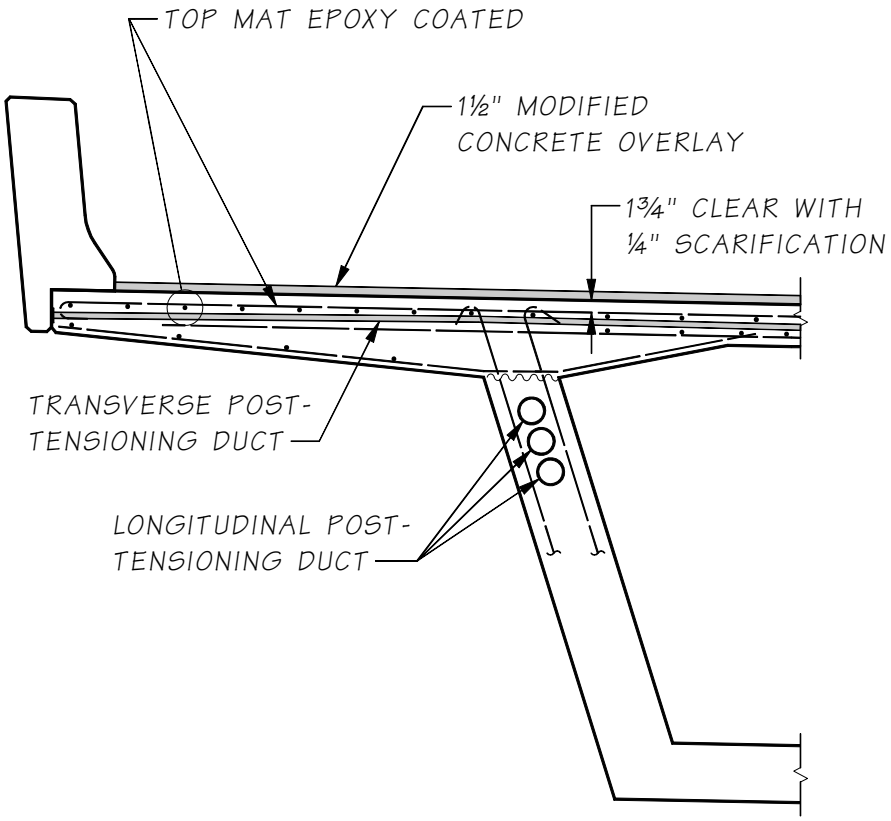

Figure 5.7.4-2

Only the bridge deck top steel reinforcing mat and traffic barrier S1 bars are epoxy coated.

System 3:—2″ of concrete cover over epoxy-coated top mat of deck reinforcing with a 0.15′-0.25′ HMA with waterproofing membrane overlay. See Figure 5.7.4-3.

The 2″ of concrete cover is used for precast prestressed deck members due to the use of high quality concrete and better control of reinforcing placement. The 2″ of concrete cover includes a ¼″ tolerance for the placement of the reinforcing steel.

The total asphalt thickness will be determined during the preliminary plan development by contacting Region Design Office. The 0.25′ HMA overlay thickness is preferred if the additional deadload can be accommodated. The 0.25′ of HMA will allow future overlays to remove and replace 0.15′ without damaging the original membrane.

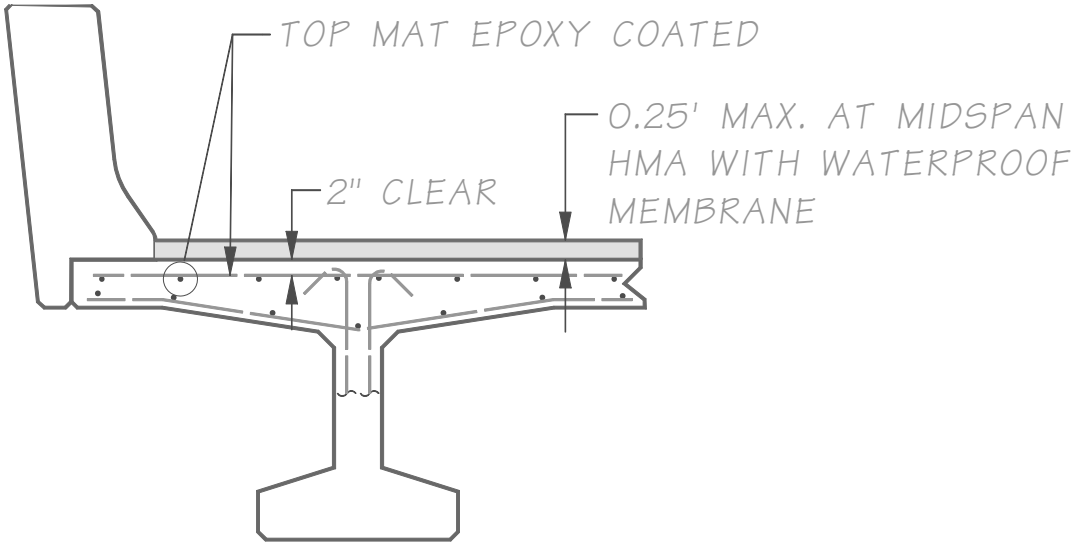

Figure 5.7.4.3

Other Systems: There may be special conditions (i.e. a widening) where it may be desirable to use a different overlay or rebar cover thickness than those shown in the typical previous Systems. For example, there have been some System 3 cases that decreased the amount of rebar cover and used a concrete overlay in order to minimize the total dead load and improve long-term performance on a high ADT route.

The Bridge Design Engineer and the Bridge Management Unit shall be consulted before one of these "Other Systems" is considered for use.

D. Deck Protection Systems – Existing Bridge Rehabilitation / Overlay

The Bridge Management unit will determine the type of overlay on deck overlay projects.

Modified Concrete Overlay – 1½″

A 1½″ Modified Concrete Overlay is the preferred overlay system for providing long-term deck protection and a durable wearing surface. The Modified Concrete Overlay special provision allows a contractor to choose between a Latex, Microsilica or Fly Ash mix design. This overlay requires a deck temperature between 45° - 75° and a wind speed less than 10 mph during construction. The time to construct and cure (42 hours) this overlay along with the traffic control cost can be significant. This type of overlay was first used on a WSDOT bridge in 1979 and has an expected life between 20-30 years.

The bridge deck is scarified prior to application of the modified concrete overlay. The depth of scarification varies between ¼″ to ½″. There are three types of machines used to scarify namely; Rottomill, Hydromill or a Super shot blaster. There are advantages and disadvantages for each machine. In some cases the Bridge Management unit will request only one of these machines be used in a project.

HMA with Membrane Overlay – 0.15′ to 0.25′

An HMAwith membrane overlay provides a low level of deck protection. This type of overlay is generally used when an overlay is needed but the deck conditions do not warrant the use of a modified concrete overlay. This type of overlay was first used on a WSDOT bridge in 1971 and has an expected life between 8-10 years depending on the ADT. The depth of overlay can vary between 0.15 ft (1.8") and 0.25 ft (3"). The Region should be contacted to determine the depth of HMA.

Polyester Modified Concrete Overlay – ¾″

This type of overlay uses specialized equipment and materials. A Polyester overlay requires dry weather with temperatures above 50 degrees during construction and normally cures in 4 hours. A Polyester overlay has been used on 12 bridges (most in the early 1990's) and has an expected life between 20-30 years depending on the ADT. Three bridges on Interstate 5 were overlaid with polyester successfully during nighttime closures in the summer of 2002 under contract 6403. A polyester concrete overlay may be used in special cases when rapid construction is needed.

Rapid Set Latex Modified Concrete Overlay – 1½″

A Rapid Set LMC overlay is considered experimental. This overlay uses special cement manufactured by the CTS company based in California. A Rapid Set LMC overlay is mixed in a mobil mixing truck and is applied like a regular LMC overlay. This overlay generally cures in 4 hours (verses 42 hours for a modified concrete overlay). The first Rapid Set LMC was applied to bridge 162/20 South Prairie Creek in the summer of 2002 under contract 6395. This overlay should be used on a limited basis until more is known about its long-term performance.

Thin Polymer Overlay – ½″

The use of Thin Polymer Overlays has generally been discontinued due to poor performance. This system has been used on movable bridges and bridges with low vertical clearances.

Concrete bridge deck protection systems shall be in accordance with the requirements of BDM Section 5.7.4 for new bridge construction and widening projects. To accommodate a future deck overlay, bridges shall be designed as shown in Table 3.8-2:

Deck overlay may be required at the time of original construction for some bridge widening or staged construction projects if ride quality is a major concern.

5.8 Cast-in-Place Post-tensioned Bridges

5.8.1 Design Parameters

A. General

Post-tensioning is generally used for cast-in-place construction and spliced precast girders since pretensioning is generally practical only for fabricator-produced structural members. The Post-Tensioned Box Girder Bridge Manual[24] published by the Post-Tensioning Institute in 1978 is recommended as the guide for design. This manual discusses longitudinal post-tensioning of box girder webs and transverse post-tensioning of box girder slabs, but the methods apply equally well to other types of bridges. The following recommendations are intended to augment the PTI Manual and the AASHTO Code and point out where current WSDOT practice departs from practices followed elsewhere.

The AASHTO criteria for reinforced concrete apply equally to bridges with or without post-tensioning steel. However, designers should note certain requirements unique to prestressed concrete such as special ϕ-factors, load factors and shear provisions.

Post-tensioning consists of installing steel tendons into a hollow tight ferrous also referred as sheath duct in a structure after the concrete sections are cast. These tendons are usually anchored at each end of the structure and stressed to a design strength using a hydraulic jacking system. After the tendon has been stressed, the duct is filled with grout which bonds the tendon to the concrete section and prevents corrosion of the strand. The anchor heads are then encased in concrete to provide corrosion protection.

B. Bridge Types

Post-tensioning has been used in various types of cast-in-place bridges in Washington State with box girders predominating. See Appendix B for a comprehensive list of box girder designs. The following are some examples of other bridge types:

Kitsap County, Contract C-9788, Multi-Span Slab

Peninsula Drive, Contract C-5898, Two- Span Box Girder

Covington Way to 180th Avenue SE, Contract C-4919, Two-Span Box Girder Longitudinal Post-Tensioning

Snohomish River Bridge, Contract C-4444, Multi-Span Box Girder Longitudinal Post-Tensioning

See BDM Section 2.4.1 for structure type comparison of post-tensioned concrete box girder bridges to other structures. In general, a post-tensioned cast-in-place bridge can have a smaller depth-to-span ratio than the same bridge with conventional reinforcement. This is an important advantage where minimum structure depth is desirable.

1. Slab Bridge

Structure depth can be quite shallow in the positive moment region when post-tensioning is combined with haunching in the negative moment region. However, post-tensioned cast-in-place slabs are usually more expensive than when reinforced conventionally. Designers should proceed with caution when considering post-tensioned slab bridges because severe cracking in the decks of bridges of this type has occurred[31,32,33].

The Olalla Bridge (Contract 9202) could be reviewed as an example. This bridge has spans of 41.5 feet - 50 feet - 41.5 feet, a midspan structure depth of 15 inches, and some haunching at the piers.

2. T-Beam Bridge

   This type of bridge, combined with slope-leg columns, can be structurally efficient and aesthetically pleasing, particularly when the spacing of the beams and the columns are the same. A T-Beam bridge can also be a good choice for a single-span simply-supported structure.

   When equally spaced beams and columns are used in the design, the width of beam webs should generally be equal to the width of the supporting columns. See SR 16, Union Avenue O'Xings, for an example. Since longitudinal structural frame action predominates in this type of design, crossbeams at intermediate piers can be relatively small and the post-tensioning tendons can be placed side-by-side in the webs, resulting in an efficient center of gravity of steel line throughout. For other types of T-Beam bridges, the preferred solution may be smaller, more closely spaced beams and fewer, but larger pier elements. If this type of construction is used in a multispan, continuous bridge, the beam cross-section properties in the negative moment regions need to be considerably larger than the properties in the positive moment regions to resist compression.

   Larger section properties can be obtained by gradually increasing the web thickness in the vicinity of intermediate piers or, if possible, by adding a fillet or haunch. The slab overhang over exterior webs should be roughly half the web spacing.

3. Box Girder Bridge

   This type of bridge has been a popular choice in this state. The cost of a prestressed box girder bridge is practically the same as a conventionally-reinforced box girder bridge, however, longer spans and shallower depths are possible with prestressing.

4. Box Girders

   The superstructure of multi-cell box girders shall be designed as a unit. The entire superstructure section (traffic barrier excluded) shall be considered when computing the section properties.

   Web spacing should normally be 8 to 11 feet and the slab overhang over exterior girders should be approximately half the girder spacing unless transverse post-tensioning is used. The apparent visual depth of box girder bridges can be reduced by sloping all or the lower portion of the exterior web. If the latter is done, the overall structure depth may have to be increased. Web thickness should be 12 inches minimum, but not less than required for shear and for concrete placing clearance. Providing 2½-inches of clear cover expedites concrete placement and consolidation in the heavily congested regions adjacent to the post-tensioning ducts. Webs should be flared at anchorages. Top and bottom slab thickness should normally meet the requirements of Section 5.3.1.B, but not less than required by stress and specifications. Generally, the bottom slab would require thickening at the interior piers of continuous spans. This thickening should be accomplished by raising the top surface of the bottom slab at the maximum rate of ½-inch per foot.

   For criteria on distribution of live loads, see Section 4.1.2.B. All slender members subjected to compression must satisfy buckling criteria.

C. Strand and Tendon Arrangements

The total number of strands selected should be the minimum required to carry the service loads at all points. Duct sizes and the number of strands they contain vary slightly, depending on the supplier. Chapter 2 of the PTI Post-Tensioned Box Girder Bridge Manual, and shop drawings of the recent post-tensioned bridges kept on file in the Construction Plans Section offer guidance to strand selection. In general, a supplier will offer several duct sizes and associated end anchors, each of which will accommodate a range of strand numbers up to a maximum in the range. Present WSDOT practice is to indicate only the design force and cable path on the contract plans and allow the post-tensioning supplier to satisfy these requirements with tendons and anchors. The most economical tendon selection will generally be the maximum size within the range. Commonly-stocked tendons include 9, 12, 19, 27, 31, and 37 - ½-inch diameter strands, and the design should utilize a combination of these commonly-stocked items. For example, a design requiring 72 strands per web would be most economically satisfied by two standard 37-strand tendons. A less economical choice would be three standard 27-strand tendons containing 24 strands each. Tendons should not be larger than (37) ½-inch strand units or (27) 0.6-inch strand units, unless specifically approved by the Bridge Design Engineer and the Design Unit Supervisor. The duct area should be at least 2.5 times the net area of the prestressing steel. In the regions away from the end anchorages, the duct placement patterns indicated in Figure 5.8.1-1 through 5.8.1-3 should be used.

Although post-tensioning steel normally takes precedence in a member, sufficient room must be provided for other essential mild steel and placement of concrete, in particular near diaphragms and cross-beams.

More prestress may be needed in certain portions of a continuous superstructure than elsewhere, and the designer may consider using separate short tendons in those portions of the spans only. However, the savings on prestressing steel possible with such an arrangement should be balanced against the difficulty involved in providing suitable anchoring points and sufficient room for jacking equipment at intermediate locations in the structure. For example, torsion in continuous, multigirder bridges on a curve can be counter-balanced by applying more prestress in the girders on the outside of the curve than in those on the inside of the curve.

Some systems offer couplers which make possible stage construction of long bridges. With such systems, forms can be constructed and concrete cast and stressed in a number of spans during stage 1, as determined by the designer. After stage 1 stressing, couplers can be added, steel installed, concrete cast and stressed in additional spans. To avoid local crushing of concrete and/or grout, the stress existing in the steel at the coupled end after stage 1 stressing should not be exceeded during stage 2 stressing.

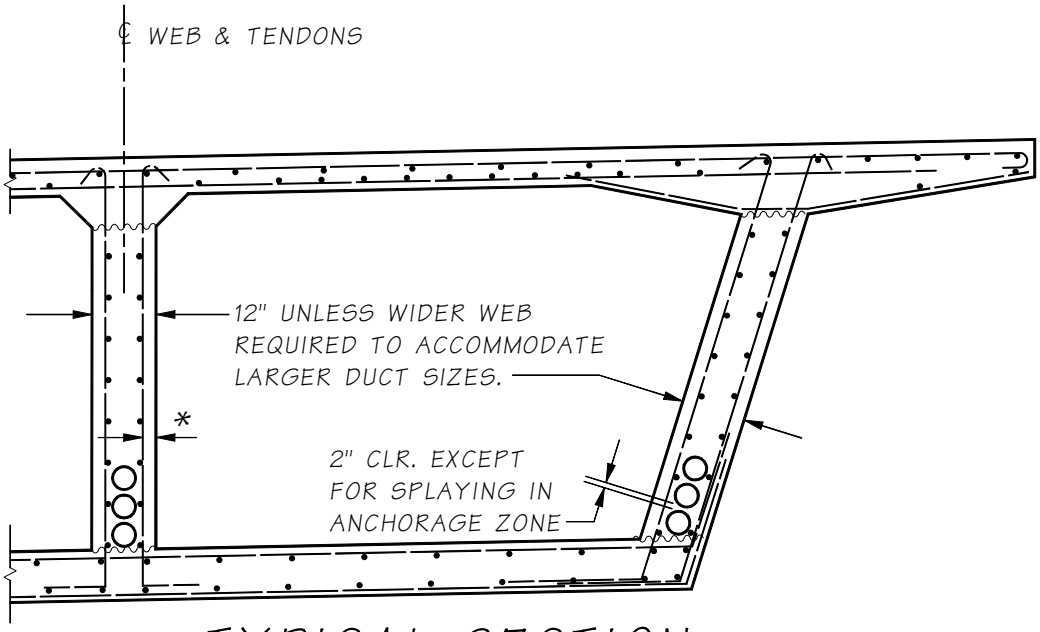

TYPICAL SECTION

* 2½" MIN. CLR. TO ANY REINF.
(TO PERMIT POURING OF CONCRETE)
A SINGLE TIER OF TENDONS CENTERED
IN THE WEB WILL GENERALLY PERMIT
THE USE OF THINNER WEBS THAN
USING DOUBLE TIERS AS SHOWN BELOW.

Tendon Placement Pattern for Box Girder Bridges
Figure 5.8.1-1

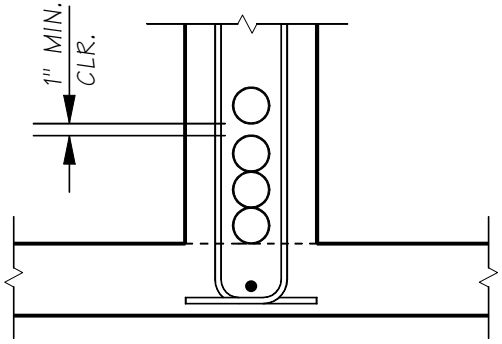

DUCTS 2 " O.D. TO 3" O.D.

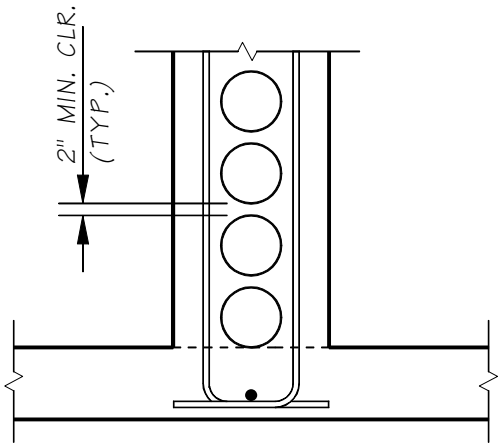

DUCTS OVER 3" O.D.

Tendon Placement Pattern for Girder Bridges
Figure 5.8.1-2

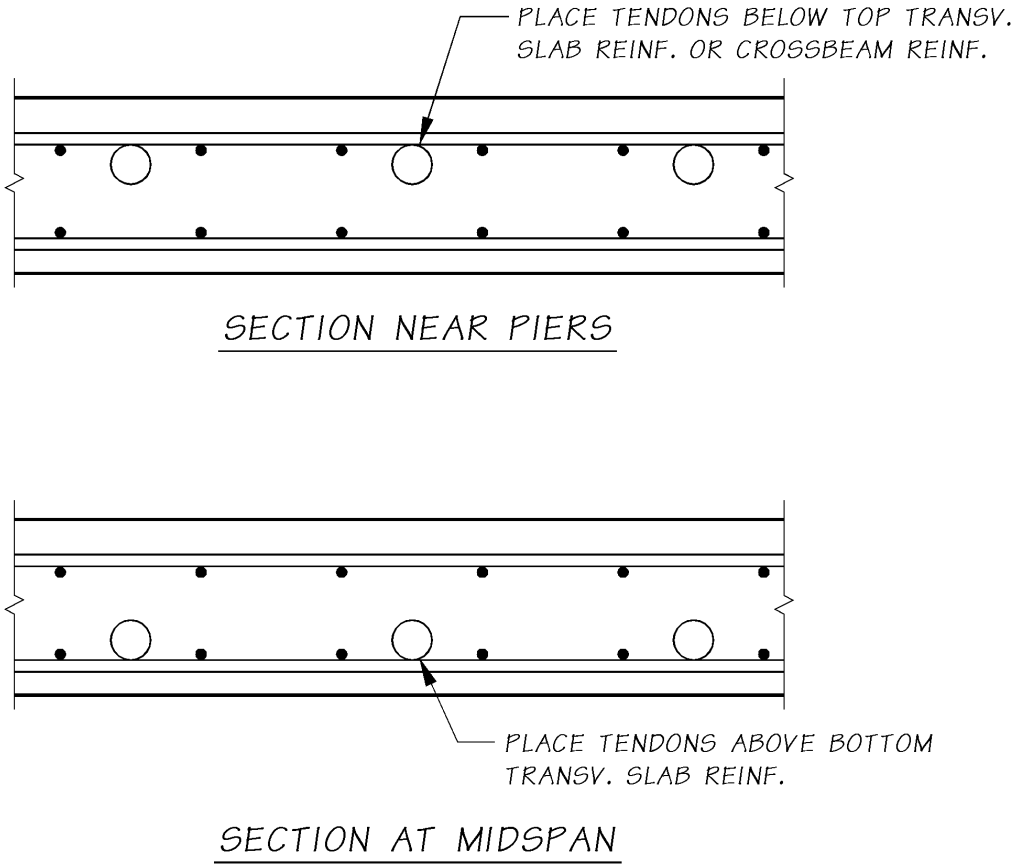

Tendon Placement Pattern for Flat Slab Bridges
Figure 5.8.1-3

D. Layout of Anchorages and End Blocks

Consult industry brochures and shop plans for recent bridges before laying out end blocks. To encourage bids from a wider range of suppliers, try to accommodate the large square bearing plate sizes common to several systems.

Sufficient room must be allowed inside the member for mild steel and concrete placement and outside the member for jacking equipment. The size of the anchorage block in the plane of the anchor plates should be large enough to provide a minimum of 1-inch clearance from the plates to any free edge.

In general, the end block dimensions must meet the requirements of the AASHTO Code. Note that in long-span box girder superstructures requiring large bearing pads, the end block should be somewhat wider than the bearing pad beneath to avoid subjecting the relatively thin bottom slab to high bearing stresses. When the piers of box girder or T-beam bridges are severely skewed, the layout of end blocks, bearing pads, and curtain walls at exterior girders become extremely difficult as shown in Figure 5.8.1-4. Note that if the exterior face of the exterior girder is in the same plane throughout its entire length, all the end block widening must be on the inside. To lessen the risk of tendon break-out through the side of a thin web, the end block should be long enough to accommodate a horizontal tendon curve of 200 feet minimum radius. The radial component of force in a curved cable is discussed in LRFD section 5.10.4.3.

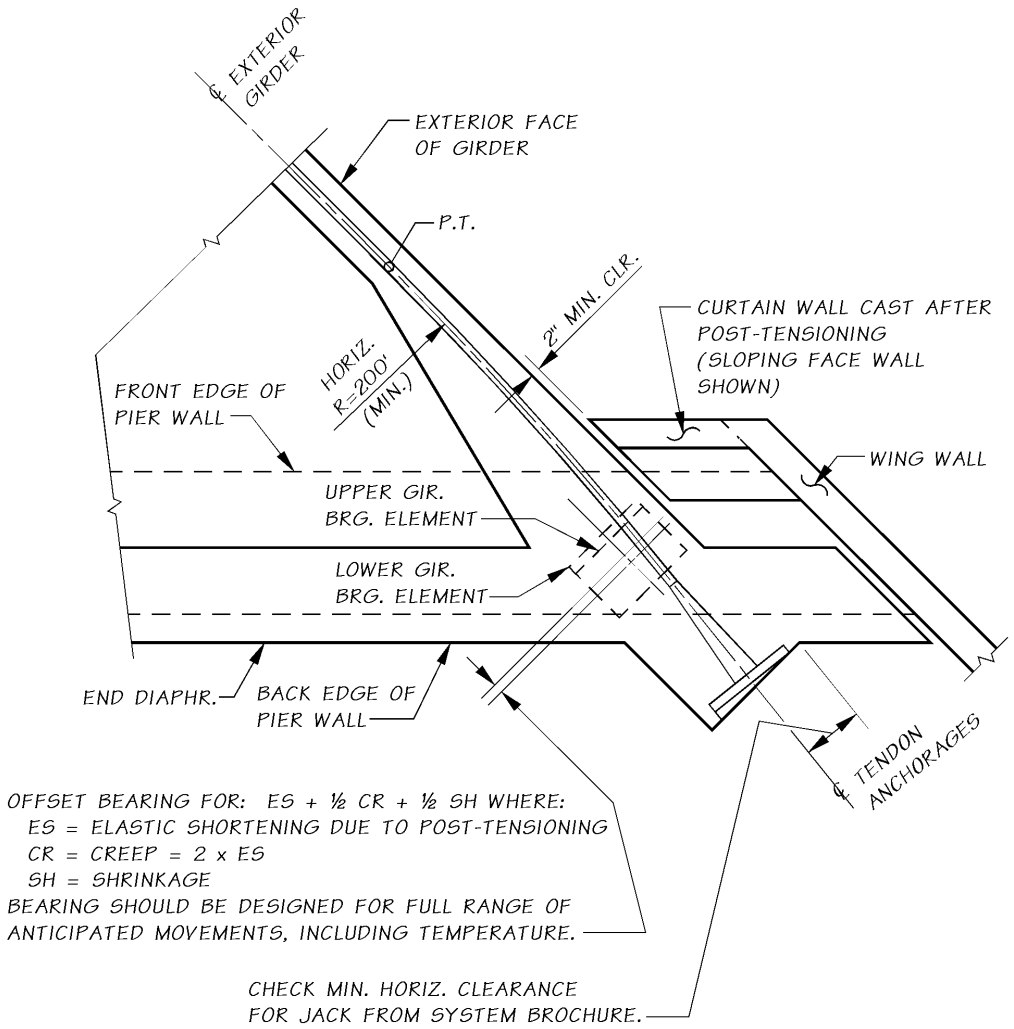

Layout of Anchorages and End Blocks
Figure 5.8.1-4

E. Superstructure Shortening

Whenever members such as columns, crossbeams, and diaphragms in bridges without prestressing steel are appreciably affected by post-tensioning of the main girders, those effects should be included in the design. This will generally be true in structures containing rigid frame elements. For further discussion, see Chapter 2.6 of reference 24 and Section 9.3.2.

Past practice in the state of Washington regarding control of superstructure shortening in post-tensioned bridges with rigid piers can be illustrated by a few examples. Single-span bridges have been provided with a hinge at one pier and longitudinal slide bearings at the other pier. Two-span bridges have been detailed with longitudinal slide bearings at the end piers and a monolithic middle pier. On the six-span Evergreen Parkway Undercrossing structure, the center pier (pier 4) was built monolithic with the superstructure, and all the other piers were constructed with slide bearings. After post- tensioning, the bearings at piers 3 and 5 were converted into fixed bearings to help resist large horizontal loads such as earthquakes.

Superstructures which are allowed to move longitudinally at certain piers are typically restrained against motion in the transverse direction at those piers. This can be accomplished with suitable transverse shear corbels or bearings allowing motion parallel to the bridge only. The casting length for box girder bridges shall be slightly longer than the actual bridge layout length to account for the elastic shortening of the concrete due to prestress.

F. Effects of Curved Tendons

Curved tendons induce deviation forces that are radial to the tendon in the plane of tendon curvature. Curved tendons with multiple strands also induce out-of-plane forces that are perpendicular to the plane of the tendon curvature. Resistance to curved tendon induced forces may be provided by increasing the concrete cover over the duct, by adding confinement reinforcement or by combination of both.

Confinement reinforcement shall be proportioned to ensure that steel stress at service limit state does not exceed $0.6f_y$ for grade 60 reinforcement. Spacing of the confinement reinforcement shall not exceed 3.0 times the outside diameter of the duct or 18.0 in.

The in-plane deviation force effects due to the change in direction of tendons shall be taken as:

$$F_{u-in} = \frac{P_u}{R}$$

The out-of-plane force effect due to the wedging action of strands against the duct wall may be taken as:

$$F_{u-out} = \frac{P_u}{\pi R}$$

In addition to the above requirement, supplemental ties shall be provided to confine the PT tendons when horizontal curvature radius is less than 800 ft or the effect of in-plane and out-of-plane forces exceeds the limit shown below:

$$\frac{P_u}{R}\left(1+\frac{1}{\pi}\right) \geq 10 \text{ k/ft}$$

where:

P_u = factored tendon force = 1.2 P_{jack} (kips)
R = radius of horizontal curvature at the considered locations (ft)

The curved tendon confinement reinforcement includes as shown in Figure 5.8.1.5.

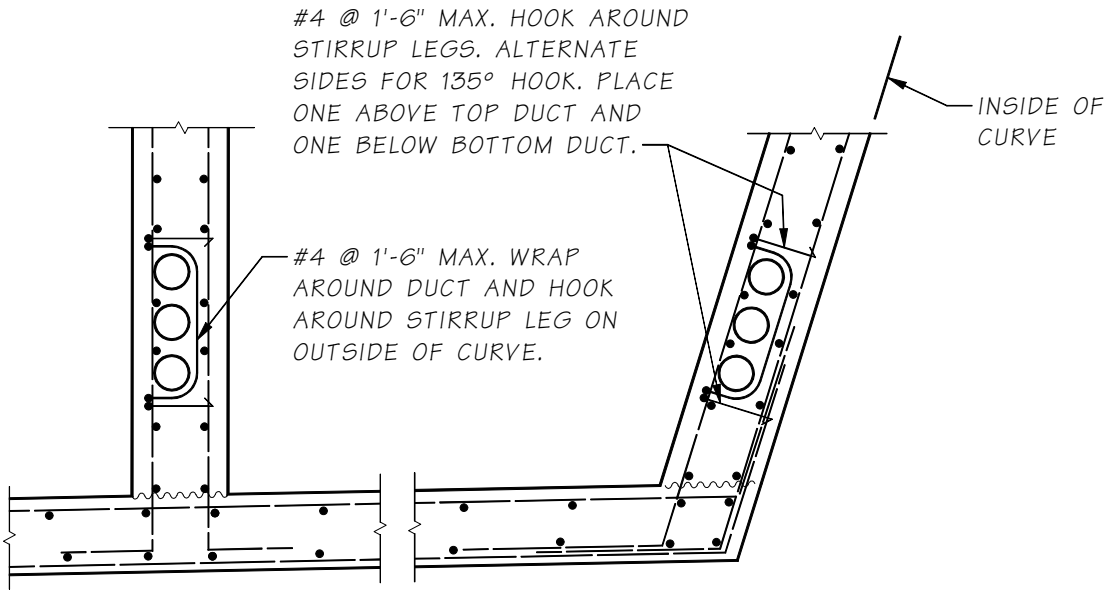

Figure 5.8.1.5

The shear resistance of the concrete cover against deviation force, Vr shall be taken as:

$$V_r = 0.125\varphi d_c \sqrt{f'_c}$$

where:

$F_{u\text{-}in}$ = the in-plane deviation force effect per unit length of girder. k/ft
$F_{u\text{-}out}$ = the out-of-plane deviation force effect per unit length of girder. k/ft
P_u = factored tendon force, kips
R = radius of tendon curvature at the considered location, ft
F = resistance factor
d_c = minimum concrete cover over the tendon duct plus one-half of the duct diameter, in.
f'_c = compressive strength of concrete at time of initial loading, ksi

If the above shear resistance is not adequate, local confinement reinforcement shall be provided throughout the curved tendon segments to resist all of the out-of-plane forces, preferably in form of spiral reinforcement.

H. Edge Tension Forces

If the centroid of all tendons is located outside of the kern of the section, longitudinal edge tension force is induced. The longitudinal edge tension force may be determined from an analysis of a section located at one-half the depth of the section away from the loaded surface taken as a beam subjected to combined flexural and axial load.

5.8.2 Analysis

A. General

The procedures outlined in Section 2.1 through 2.5 of reference 24 for computation of stress in single and multispan box girders can be followed for the analysis of T-beams and slab bridges, as well.

The BDS program available on the WSDOT system will quickly perform a complete stress analysis of a box girder, T-beam, or slab bridge, provided the structure can be idealized as a plane frame. For further information, see the program user instructions.

The STRUDL program is recommended for complex structures which are more accurately idealized as space frames. Examples are bridges with sharp curvature, varying superstructure width, severe skew, or slope-leg intermediate piers. An analysis method in Chapter 10 of reference 25 for continuous prestressed beams is particularly well adapted to the loading input format in STRUDL. In the method, the forces exerted by cables of parabolic or other configurations are converted into equivalent vertical linear or concentrated loads applied to members and joints of the superstructure. The vertical loads are considered positive when acting up toward the center of tendon curvature and negative when acting down toward the center of tendon curvature. Forces exerted by anchor plates at the cable ends are coded in as axial and vertical concentrated forces combined with a concentrated moment if the anchor plate group is eccentric. Since the prestress force varies along the spans due to the effects of friction, the difference between the external forces applied at the end anchors at opposite ends of the bridge must be coded in at various points along the spans in order for the summation of horizontal forces to equal zero. With correct input (check thoroughly before submitting for computation), the effects of elastic shortening and secondary moments are properly reflected in all output listings, and the prestress moments printed out are the actual resultant (total) moments acting on the structure. For examples of the application of STRUDL to post-tensioning design, see the calculations for SR 90 West Sunset Way Ramp (simple), SR 5 Nalley Valley Viaduct (complex), and the STRUDL manuals.

B. Section Properties

As in other types of bridges, the design normally begins with a preliminary estimate of the superstructure cross-section and the amount of prestress needed at points of maximum stress and at points of cross-section change. For box girders, See Figure 2-0 through 2-5 of Reference 24. For T-beam and slab bridges, previous designs are a useful guide in making a good first choice.

For frame analysis, use the properties of the entire superstructure regardless of the type of bridge being designed. For stress analysis of slab bridges, calculate loads and steel requirements for a 1-foot wide strip. For stress analysis of T-beam bridges, use the procedures outlined in the AASHTO specifications.

Note that when different concrete strengths are used in different portions of the same member, the equivalent section properties should be calculated in terms of either the stronger or weaker material. In general, the concrete strength should be limited to the values indicated in Section 5.1.1 of this manual.

C. Preliminary Stress Check

In accordance with AASHTO, flexural stresses in prestressed members are calculated at service load levels. Shear stresses, stirrups, moment capacities vs. applied moments are calculated at ultimate load levels.

During preliminary design, the first objective should be to satisfy the allowable flexural stresses in the concrete at the critical points in the structure with the chosen cross-section and amount of prestressing steel, then the requirements for shear stress, stirrups, and ultimate moment capacity can be readily met with minor or no modifications in the cross-section. For example, girder webs can be thickened locally near piers to reduce excessive shear stress.

In the AASHTO formulas for allowable tensile stress in concrete, bonded reinforcement should be interpreted to mean bonded auxiliary (nonprestressed) reinforcement in conformity with Article 8.6 of the 2002 ACI Code for Analysis and Design of Reinforced Concrete Bridge Structures. Normal practice is to use the time-dependent prestress loss from Table 5.1.4-1. The long-hand formulas for computing time-dependent losses in steel stress given in the code should be used only when a more thorough investigation is deemed necessary. To minimize concrete cracking and protect reinforcing steel against corrosion for bridges, the allowable concrete stress under final conditions in the precompressed tensile zone should be limited to zero in the top and bottom fibers as shown in Figure 5.8.2-1.

In all cases where tension is allowed in the concrete under initial or final conditions, extra mild steel (auxiliary reinforcement) should be added to carry the total tension present. This steel can be computed as described in Chapter 9-5 of Reference 25.

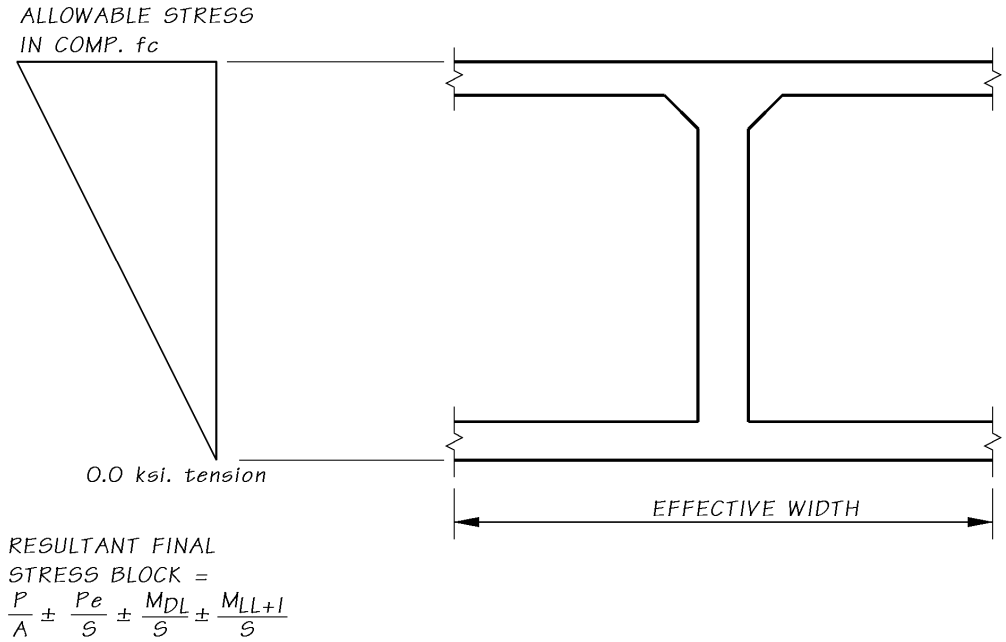

Box Girder Stresses
Figure 5.8.2-1

In case of overstress, try one or more of the following remedies: Adjust tendon profiles, add or subtract prestress steel, thicken slabs, revise strength of concrete of top slab, add more short tendons locally, etc. Then repeat calculations as necessary.

D. Camber

The camber to be shown on the plans should include the effect of both dead load and final prestress and may be taken as given in Table 5.2.6-1.

E. Expansion Bearing Offsets

Figure 5.8.1-4 indicates expansion bearing offsets for the partial effects of elastic shortening, creep, and shrinkage. The initial offset shown is intended to result in minimal bearing eccentricity for the majority of the life of the structure. The bearing should be designed for the full range of anticipated movements: ES+CR+SH+TEMP.

5.8.3 Post-tensioning

A. Tendon Layout

After a preliminary estimate has been made of the concrete section and the amount of prestressing needed at points of maximum applied load, it may be advantageous in multispan bridges to draw a tendon profile to a convenient scale superimposed on a plot of the center of gravity of concrete (c.g.c.) line. The most efficient tendon profile from the standpoint of steel stress loss will normally be a series of rather long interconnected parabolas, but other configurations are possible. For continuous bridges with unequal span lengths, the tendon profile (eccentricity) shall be based on the span requirement. This results in an efficient post-tensioning design. The tendon profile and c.g.c. line plot is strongly recommended for superstructures of variable cross-section and/or multiple unsymmetrical span arrangements, but is not necessary for superstructures having constant cross- section and symmetrical spans. The main advantages of the tendon profile and c.g.c. plot are:

1. The primary prestress moment curves (prestress force times distance from c.g.c. line to center of gravity of steel (c.g.s.) lines) at all points throughout all spans are quickly obtained from this plot and will be used to develop the secondary moment curves (if present) and, ultimately, to develop the resultant total prestress moment curve.
2. Possible conflicts between prestressing steel and mild steel near end regions, crossbeams, and diaphragms may become apparent.
3. Possible design revisions may be indicated. For example, camber in bridges with unequal spans can be balanced by adjusting tendon profiles.

   The tendon profile and c.g.c. line diagram should also contain a sketch of how the end bearing plates or anchors are to be arranged at the ends of the bridge. Such a sketch can be useful in determining how large the end block in a girder bridge will have to be and how much space will be required for mild steel in the end region. In general, the arrangement of anchor plates should be the same as the arrangement of the ducts to which they belong to avoid problems with duct cross-overs and to keep end blocks of reasonable width.

B. Prestress Losses

Friction losses occurring during jacking and prior to anchoring, depend on the system and materials used. For purposes of design, this office has specified a rigid spiral galvanized ferrous metal duct system for which μ shall be 0.20 and K = 0.0002. This system is at present available from several large suppliers. To avoid the substantial friction loss caused by sharp tendon curvature in the end regions where the tendons flare out from a stacked arrangement towards the bearing plates, use 0.10 times the span length or 20 feet as the minimum flare zone length. The recommended minimum radius (horizontal or vertical) of flared tendons is 200 feet. In the special cases where sharp curvature cannot be avoided, extra horizontal and vertical ties should be added along the concave side of the curve to resist the tendency to break through the web. See stirrup calculations for SR 2, EU-Line O'Xing, for a suggested method of calculating this additional steel.

All other losses (those due to shrinkage, elastic shortening, creep, and relaxation of steel) shall be as indicated in Section 5.2.6-E.

For bridges with horizontal curvature the total friction losses calculation shall be based on the equation:

C. Friction Coefficient

Effective prestressing force in design of post-tensioned bridges depends on the accumulation of friction losses due to the horizontal and vertical curvature of the tendons as well as the curvature of the bridge. Although jacking ends of post-tensioned bridges is important to achieve more effective design, consideration shall be given to the practicality of jacking during construction. The following general stressing guidelines shall be considered in specifying jacking end of post-tensioned bridges.

- All simple or multiple span cast-in-place or precast concrete bridges with total length of less than 350 ft. shall be stressed from one end only.
- All cast-in-place or precast concrete post tensioned bridges with total length between 350 ft. to 600 ft. may be stressed from one end or both ends if greater friction losses due to vertical of horizontal curvature are justified by the designer.
- All cast-in-place or precast concrete bridges with total length of greater than 600 ft. shall be stressed from both ends.

When stressing tendons from both ends or when alternating a single pull from both ends (half tendons pulled from one end with the other half pulled from the other end), all tendons shall be stressed on one end before all tendons are stressed on the opposite end.

Stressing at both ends shall preferably be done on alternate tendons, and need not be done simultaneously on the same tendon. In rare cased, tendons can be stressed from both ends to reduce large tendon losses but is undesirable due to worker safety issues and a reduction in stressing redundancy.

D. Steel Stress Curve

Steel stresses may be plotted either as the actual values or as a percentage of the jacking stresses. A steel stress diagram for a typical two-span bridge is shown below. Spans are symmetrical about pier 2 and the bridge is jacked from both ends. All values are in ksi and pertain to 270 ksi either stress relieved or low relaxation strands. f_{pu} denotes ultimate strength of strands in ksi. All WSDOT post-tensioning designs are based on low relaxation strands.

Losses due to creep, shrinkage, and relaxation of prestressing steel are given in Table 5.1.4-1 for structures of usual design and normal weight concrete.

Yield Stress for Stress-Releive Strands = $0.85\ f_{pu}$

Yield Stress for Low-Relaxation Strands = $0.90\ f_{pu}$

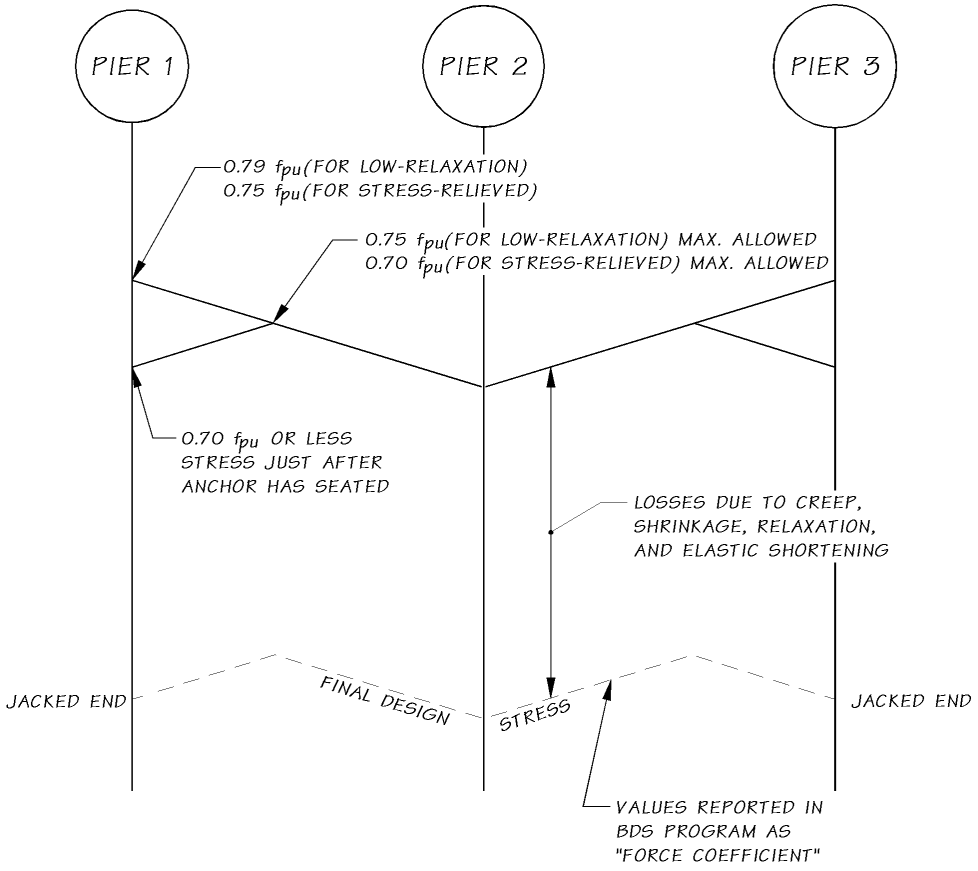

Stress Diagram for a 2-span PT Bridge
Figure 5.8.3-1

Accurate plotting of steel stress variation due to local curvature is normally not necessary, and straight lines between intersection points on the diagram as shown in Figure 5.8.3-1 are usually sufficient. When tendons are continuous through the length of the bridge, the stress for design purposes at the jacked end should be limited to $0.75f_{pu}$ or 202 ksi for 270 ksi stress relieved strands or $0.79f_{pu}$ or 213 ksi for 270 ksi low relaxation strands. This would permit the post-tensioning contractor to jack to the slightly higher value of $0.77f_{pu}$ for stress relieved strands or $0.81f_{pu}$ for low relaxation strands as allowed by the AASHTO Code in case friction values encountered in the field turn out somewhat greater than the standard values used in design. Stress loss at jacked end should be calculated from the assumed anchor set of ⅜ inch, the normal slippage during anchoring in most systems. At the high points on the initial stress curve, the stress should not exceed $0.70f_{pu}$ for stress relieved strands or $0.75f_{pu}$ low relaxation strands after sealing of anchorage. If these values are exceeded, the jacking stress can be lowered or alternately the specified amount of anchor set can be increased.

When the total tendon length (L) is less than the length of cable influenced by anchor set (x) and the friction loss is small, as in short straight tendons, the $0.70f_{pu}$ value governs. In these cases, the maximum allowable jacking stress value of $0.75f_{pu}$ for stress relieved or $0.78f_{pu}$ for low relaxation strands cannot be used and a slightly lower value should be specified as shown in Figure 5.8.3-2.

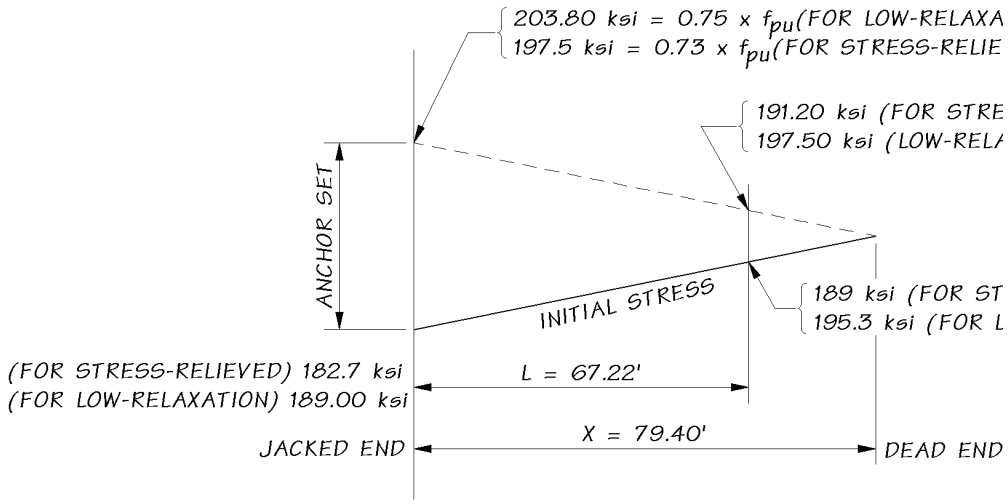

Stress Diagram at Jacking End
Figure 5.8.3-2

In single-span, simply supported superstructures friction losses are so small that jacking from both ends is normally not warranted. In the longer multispan bridges where the tendons experience greater friction losses, jacking from both ends will usually be necessary. Jacking at both ends need not be done simultaneously, since final results are virtually the same whether or not the jacking is simultaneous. If unsymmetrical two-span structures are to be jacked from one end only, the jacking must be done from the end of the longest span.

The friction coefficient for post-tensioning tendons in rigid and semi-rigid galvanized metal sheathing should be taken as shown in Table 5.8.3-1.

Tendon length	μ
500 ft or less	0.15
Over 500 ft to 750 ft	0.20
Over 750 ft to 1000 ft	0.25

Friction Coefficients for Post-Tensioning Tendons
Table 5.8.3-1

For tendon lengths greater than 1000 feet, investigation is warranted on current field data of similar length bridges for appropriate values of μ.

E. Flexural Stress in Concrete

Stress at service load levels in the top and bottom fibers of prestressed members should be checked for at least two conditions that will occur in the lifetime of the members. The initial condition occurs just after the transfer of prestress when the concrete is relatively fresh and the member is carrying its own dead load. The final condition occurs after all the prestress losses when the concrete has gained its full ultimate strength and the member is carrying dead load and live load. For certain bridges, other intermediate loading conditions may have to be checked, such as when prestressing and falsework release are done in stages and when special construction loads have to be carried, etc. The concrete stresses shall be within the AASHTO allowable except as amended in Subsection 5.2.3.B of this manual.

In single-span simply supported superstructures with parabolic tendon paths, flexural stresses at service load levels need to be investigated at the span midpoint where moments are maximum, at points where the cross-section changes, and near the span ends where shear stress is likely to be maximum (see Section 5.8.4 Shear). For tendon paths other than parabolic, flexural stress should be investigated at other points in the span as well.

In multispan continuous superstructures, investigate flexural stress at service load should be at points of maximum moment (in the negative moment region of box girders, check at the quarter point of the crossbeam), at points where the cross section changes, and at points where shear is likely to be maximum. At points of maximum moment, the ultimate moment capacity of the section should exceed or equal the applied ultimate moment. Normally, mild steel should not be used to supplement the ultimate moment capacity. It may be necessary, however, to determine the partial temperature and shrinkage stresses that occur prior to post-tensioning and supply mild steel reinforcing for this condition.

In addition, maximum and minimum steel percentages and cracking moment should be checked. See Section 2.3.8 of Reference 24.

F. Prestress Moment Curves

1. Single-Span Bridges, Simply Supported

   The primary prestress moment curve is developed by multiplying the initial steel stress curve ordinates by the area of prestressing steel times the eccentricity of steel from the center of gravity of the concrete section at every tenth point in the span. The primary prestress moment curve is not necessary for calculating concrete stresses in single-span simply supported bridges. Since there is no secondary prestress moment developed in the span of a single span, simply supported bridge which is free to shorten, the primary prestress moment curve is equal to the total prestress moment curve in the span. However, if the single span is rigidly framed to supporting piers, the effect of elastic shortening should be calculated. The same would be true when unexpected high friction is developed in bearings during or after construction.

2. Multispan Continuous Bridges

   With the exception of T.Y. Lin's equivalent vertical load method used in conjunction with the STRUDL program, none of the methods described in the following section take into account the elastic shortening of the superstructure due to prestressing. To obtain the total prestress moment curve used to check concrete stresses, the primary and secondary prestress moment curves must be added algebraically at all points in the spans. As the secondary moment can have a large absolute value in some structures, it is very important to obtain the proper sign for this moment, or a serious error could result.

   A discussion of methods for calculating secondary prestress moments follows:

3. WSDOT BEAMDEF Program

   If the primary prestress moment values at tenth points are coded into this program, span stiffness factors, carry-overs, and fixed-end moments will be obtained. Distribution of the fixed-end moments in all spans will yield the secondary moments at all piers. The secondary moments will be zero at simply supported span ends and cantilevers.

   a. Equivalent Vertical Load

      See discussion in Section 5.8.2 of this manual.

b. Table of Influence Lines

See Appendix A.1 of Reference 24 for a discussion. This method is similar to T. Y. Lin's equivalent vertical load method and is a relatively quick way to manually compute prestress moments in bridges of up to five spans. Since the secondary moment effect due to vertical support reactions is included in the coefficients listed in the tables, the support moment computed is the total moment at that point.

c. Slope Deflection

See Section 2.5 of Reference .24 for a discussion. The method, though straightforward, is time consuming.

G. Partial prestressing

Partial prestressing is not allowed in WSDOT bridge designs. However, mild reinforcement could be added to satisfy the ultimate flexural capacity under factored loads if following requirements are satisfied:

a. Allowable stresses, as specified in BDM for Service-I and Service-III limit states, shall be satisfied with post-tensioning only. The zero-tension policy remains unchanged.

b. Additional mild reinforcement could be used if the ultimate flexural capacity cannot be met with the prestressing provided for service load combinations. The mild reinforcement is filling the gap between the service load and ultimate load requirements. This should be a very small amount of mild reinforcement since adequate post-tensioning is already provided to satisfy the service load requirement for dead load and live loads.

c. If mild reinforcement added, the resistance factor for flexural design shall be adjusted per LRFD article 5.5.4.2.1 to account for the effect of partial prestressing.

d. If mild reinforcement added, the section will still be considered uncracked and requirements for crack control, and side skin reinforcement do not apply.

5.8.4 Shear

A. Shear Capacity

Concrete box girder and T-beam bridges with horizontal construction joints (which result from webs and slabs being cast at different times) should be checked for both vertical and horizontal shear capacity. Generally, horizontal shear requirements will control the stirrup design.

Vertical concrete shear capacity for prestressed or post-tensioned structural members is calculated in AASHTO LRFD Specifications Section 5.8.3. Minimum stirrup area, maximum stirrup spacing, and maximum stirrup capacity, Vs, are further subject to the limitations presented in AASHTO LRFD Specifications Section 5.8.2.5 and 5.8.2.7. For further explanation, refer to Section 11.4 of the ACI 318-02 Building Code Requirements for Reinforced Concrete and Commentary. Chapter 27 of Notes on ACI 318-02 Building Code Requirements for Reinforced Concrete with Design Applications presents two excellent example problems for vertical shear design. The use of an electronic spreadsheet simplifies the repetitive and detailed nature of these calculations.

B. Horizontal Shear

Horizontal shear stress acts over the contact area, of width b_v, between two interconnected surfaces of a composite structural member.

Horizontal shear design is relatively straightforward. The AASHTO LRFD section 5.8.4 shall be used for shear-friction design.

For cast-in-place sloped outer webs, increase inside stirrup reinforcement and bottom slab top transverse reinforcement as required for the web moment locked-in during construction of the top slab. This moment about the bottom corner of the web is due to tributary load from the top slab concrete placement plus 10 psf form dead load.

For precast tub outer webs, increase the stirrup and bottom slab steel as required by moment induced by falsework overhang brackets supporting concrete plus 10 psf overhang deck load.

C. End Block Stresses

The highly concentrated forces at the end anchorages cause bursting and spalling stresses in the concrete which must be resisted by vertical and horizontal reinforcement. For a better understanding of this subject, see Chapter 7 of Reference 25 and 26, and Section 2.82 of Reference 24.

Note that the procedures for computing horizontal bursting and spalling steel in the slabs of box girders and T-beams are similar to those required for computing vertical steel in girder webs, except that the slab steel is figured in a horizontal instead of a vertical plane. In box girders, this slab steel should be placed half in the top slab and half in the bottom slab. See Appendix A for typical box girder end block reinforcement details. The anchorage zones of slab bridges will require vertical stirrups as well as additional horizontal transverse bars extending across the width of the bridge. The horizontal spalling and bursting steel in slab bridges shall be placed half in a top layer and half in a bottom layer.

D. Anchorage Stresses

The average bearing stress on the concrete behind the anchor plate and the bending stress in the plate material should satisfy the requirements of the AASHTO Code. In all sizes up to the 31-strand tendons, the square anchor plates used by three suppliers (DSI, VSL, AVAR, Stronghold) meet the AASHTO requirements, and detailing end blocks to accommodate these plates is the recommended procedure. In the cases where nonstandard (rectangular) anchor plates must be specified because of space limitations, assume that the trumpet associated with the equivalent size square plate will be used. In order to calculate the net bearing plate area pressing on the concrete behind it, the trumpet size can be scaled from photos in supplier brochures. Assume for simplicity that the concrete bearing stress is uniform. Bending stress in the steel should be checked assuming bending can occur across a corner of the plate or across a line parallel to its narrow edge. See Appendix 5-B2 for preapproved anchorages for post-tensioning.

E. Anchorage Plate Design

The design and detailing of anchorage block in cast-in-place post-tensioned box girders shall be based on single plane anchorage device. Multi-plane anchorage, however, could be used if stacking of single plane anchorage plates within the depth of girder is geometrically not possible. Anchorage plates shall not extend to top and bottom slab of box girders.

If Mutiplane anchorage is used, it shall be specified in the contract plans and bridge special provisions.

5.8.5 Temperature Effects

Most specifications for massive bridges call for a verification of stresses under uniform temperature changes of the total bridge superstructure. Stresses due to temperature unevenly distributed within the cross-section are not generally verified. In reality, however, considerable temperature gradients are set up within the cross-section of superstructures. Such temperature differences are mostly of a very complex nature, depending on the type of cross-section and direction of solar radiation[27].

Solar radiation produces uniform heating of the upper surface of a bridge superstructure which is greater than that of the lower surface. An inverse temperature gradient with higher temperatures at the lower surface occurs rarely and involves much smaller temperature differences. In statically indeterminate continuous bridge beams, a temperature rise at the upper surface produces positive flexural moments which cause tensile stresses in the bottom fibers. When the temperature gradient is constant over the entire length of a continuous beam superstructure, positive flexural moments are induced in all spans. These moments are of equal constant magnitude in the interior spans and decrease linearly to zero in the end spans. The most critical zones are those which have the lowest compressive stress reserve in the bottom fibers under prestress plus dead load. Normally, these are the zones near the interior supports where additional tensile stresses develop in the bottom fibers due to

- A concentrated support reaction, and
- Insufficient curvature of prestressed reinforcement.

Studies have shown that temperature is the most important tension-producing factor, especially in two-span continuous beams in the vicinity of intermediate supports, even when the temperature difference is only 10°C between the deck and bottom of the beam. In practice, a box girder can exhibit a ΔT=30°C. The zone at a distance of about 0.3 to 2.0d on either side of the intermediate support proved to be particularly crack-prone.

Computation of stresses induced by vertical temperature gradients within prestressed concrete bridges can become quite complex and are ignored in typical designs done by WSDOT. It is assumed that movements at the expansion devices will generally relieve any induced stresses. However, such stresses can be substantial in massive, deep bridge members in localities with large temperature fluctuations. If the structure being designed falls within this category, a thermal stress investigation should be considered. See Reference .24 and the following temperature criteria for further guidance.

1. A Mean temperature 50°F with Rise 45°F and Fall 45°F for longitudinal analysis using one-half of the Modulus of Elasticity. (Maximum Seasonal Variation.)
2. The superstructure box girder shall be designed transversely for a temperature differential between inside and outside surfaces of ±15°F with no reduction in Modulus of Elasticity (Maximum Daily Variation).
3. The superstructure box girder shall be designed longitudinally for a top slab temperature increase of 20°F with no reduction in modulus of elasticity. (In accordance with Post-Tensioning Institute Manual, Precast Segmental Box Girder Bridge Manual, Subsection 3.3.4.)

   The coefficient of thermal expansion used is 0.000006.

   Modulus of Elasticity $E_c = 33000 w_c^{1.5} \sqrt{f'_c}$

   Where:

   W = weight of concrete in kip. per cubic foot

   f'_c = Concrete compressive strength, ksi

5.8.6 Construction

A. General

Construction plans for conventional post-tensioned box girder bridges include two different sets of drawings. The first set (contract) is prepared by the design engineer (WSDOT or contracting agency) and the second set (shop) is prepared by the post-tensioning materials supplier (contractor).

B. Contract Plans

The plans should be prepared to accommodate any post-tensioning system, so only prestressing forces and eccentricity should be detailed. The concrete sections should be detailed so that available systems can be installed. Design the thickness of webs and flanges to facilitate concrete placement. Generally, web thickness for post-tensioned bridges shall be at least 12 inches.

C. Shop Plans

The shop plans are used to detail, install, and stress the post-tensioning system selected by the Contractor. These plans must contain sufficient information to allow the engineer to check their compliance with the contract plans. These plans must also contain the location of anchorages, stressing data, and arrangement of tendons.

D. Review of Shop Plans for Post-tensioned girder

Post-tensioning shop drawings should be reviewed by the designer (or Bridge Technical Advisor for non bridge office projects) and consulted with the concrete specialist if needed. Shop drawings, after reviewed by the design engineer should be stamped with the official rubber seal and returned to the bridge construction support office. Review of shop drawing must include:

1. All post-tensioning strands should be of ½" or 0.6" diameter grade 270 low relaxation uncoated strands.
2. Tendon profile and tendon placement patterns should be verified per contract plans.
3. Duct size should be based on the duct area at least 2.5 times the total area of prestressing strands.
4. Anchor set should conform to the contract plans. The post-tensioning design is typically based on an anchor set of ⅜".
5. Maximum number of strands per tendon should not exceed 37 - ½" diameter strands or 27 - 0.6" diameter strands per Standard Specifications 6-02.3(26) D.
6. Jacking force per web should be verified per contract plans.
7. Prestress force after anchor set (lift-off force) should conform to contract plans.
8. Number of strands per web shall be specified in the shop drawings and should conform to the contract plans.
9. Anchorage system should conform to pre-approved list of post-tensioning system per BDM Appendix B. The anchorage assembly dimensions and reinforcement detailing should conform to the corresponding post-tensioning catalog.
10. The curvature friction coefficient and wobble friction coefficient should conform to the contract plans. The curvature friction coefficient of $\mu = 0.15$ for bridges less than 400 feet, $\mu = 0.2$ for bridges between 400 feet and 800 feet, and $\mu = 0.25$ for bridges longer than 800 feet. The wobble friction coefficient of $k = 0.0002$ /ft is often used. These coefficients may be revised by the post-tensioning supplier if approved by the design engineer and conform to the Standard Specifications 6.02.3(26) E.

11. Post-tensioning stressing sequence should be in accordance with the contract plan post-tensioning Notes.
12. Tendon stresses shall not exceed as specified per Figure 5.8.3-2:
    1. $0.80f_{pu}$ at anchor ends immediately before seating.
    2. $0.70f_{pu}$ at anchor ends immediately after seating.
    3. $0.74f_{pu}$ at the end point of length influenced by anchor set.
13. Elongation calculations for each jacking operation should be verified. If the difference in tendon elongation exceeds 2%, the elongation calculations should be separated for each tendon per Standard Specification 6-02.3(26) A.
14. Vent points should be provided at all high points along tendon.
15. Drain holes should be provided at all low points along tendon.
16. The concrete strength at the time of post-tensioning, f'_{ci} should not be less than 4000 psi per Standard Specifications 6-02.3(26) E-1. Different concrete strength may be used if specified in the contract plans.
17. Concrete stresses at the anchorage should be checked per Standard Specifications 6-02.3(26) B-1 for bearing type anchorage. For other type of anchorage assemblies, if not covered in the Appendix 5-B2 for pre-approved list of post-tensioning system, testing per Standard Specifications 6-02.3(26) B-2 is required.

E. During Construction

1. If the measured elongation of each strand tendon is within +/- 7% of the approved calculated elongation, the stressed tendon is acceptable.
2. If the measured elongation is greater than 7%, force verification after seating (lift-off force) is required. The lift-off force should not be less than 99% of the approved calculated force or more 70% f_{pu} As.
3. If the measured elongation is less than 7%, the bridge construction office will instruct the force verification.
4. One broken strand per tendon is usually acceptable. (Post-tensioning design should preferably allow one broken strand). If more than one strand per tendon is broken, the group of tendon per web should be considered. If a group of tendons in a web is under-stressed, then the adequacy of the entire structure should be investigated by the designer and consulted with the bridge construction office.
5. Failed anchorage is usually taken care by the bridge construction office.
6. Over or under elongation is usually taken care by the bridge construction office.
7. In case of low concrete strength the design engineer should investigate the adequacy of design with lower strength.
8. Other problems such as unbalanced and out of sequence post-tensioning, strands surface condition, strand subjected to corrosion and exposure, delayed post-tensioning due to mechanical problems, Jack calibration, etc. should be evaluated per case-by-case basis and are usually taken care by bridge construction office.

5.8.7 Post-Tensioning Notes — Cast-in-Place Girders

A. General

The design plans shall contain the following information for use by the post-tensioned and state inspector: Tendon jacking sequence, friction coefficients, duct type, elastic and time-dependent losses, anchor set, prestress forces, strand elongations, deviation of ±7 percent between measured and theoretical elongations, false work construction and removal. If jacking is done at both ends of the bridge, the minimum strand elongation due to the specified jacking load for the end jacked first as well as the end jacked last should be indicated. When calculating strand elongation, use E_p = 28,000 ksi. The calculated strand elongations at the ends of the bridge are compared with the measured field values to ensure that the friction coefficients (and hence the levels of prestressing throughout the structure) agree with the values assumed by the designer.

The tendons shall be jacked in a sequence that avoids causing overstress or tension in the bridge.

The post-tensioning notes (see *Standard Plans*) for the sequence of stressing of longitudinal tendons should be shown in the Contract Plans.

5.9 Spliced Precast Girders

5.9.1 Definitions

The provisions herein apply to precast girders fabricated in segments that are spliced longitudinally to form the girders in the final structure. The cross-section for this type of bridges is typically comprised of bulb tee girders or trapezoidal tub girders with a composite cast-in-place deck. WSDOT Standard drawings for Spliced I-girders are shown in Appendices 5.9-A1 through 5.9-A3, and for Spliced-Tub girders are shown in Appendices 5.9-A1 and 5.9-A5. Span capability of precast spliced girders are shown in Appendices 5.6-A1-12-1 for I-girders and 5.6-A1-13-1 and 5.6-A1-14-1 for Trapezoidal Tub girders.

Precast deck bulb tee girder bridges may also be fabricated in segments and spliced longitudinally for final structure. Splicing in this type of girder because of the significant weight of the cross-section, which is comprised of both a girder and deck, may exceed usual limits for handling and transportation may be beneficial. Spliced structures of this type, which have longitudinal joints in the deck between each deck girder, shall comply with the additional requirements of AASTO LRFD Specifications Section 5.14.4.3.

Spliced precast girder bridges may be distinguished from what is referred to as “segmental construction” in Bridge Specifications by several features which typically include:

- The lengths of some or all segments in a bridge are a significant fraction of the span length rather than having a number of segments in each span.
- Design of joints between girder segments at the service limit state does not typically govern the design for the entire length of the bridge for either construction or for the completed structure.
- Wet-cast closure joints are usually used to join girder segments rather than match-cast joints.
- The bridge cross-section is comprised of several individual girders with a cast-in-place concrete composite deck rather than precasting the full width and depth of the superstructure as one piece. In some cases, the deck may be divided into pieces that are integrally cast with each girder. Connecting the girders across the longitudinal joints completes a bridge of this type.
- Girder sections are used, such as bulb tee, deck bulb tee or trapezoidal tub girders, rather than closed cell boxes with wide monolithic flanges.
- Provisional ducts are required for segmental construction to provide for possible adjustment of prestress force during construction. Similar requirements are not given for spliced precast girder bridges because of the redundancy provided by a greater number of webs and tendons, and typically lower friction losses because of fewer joint locations.
- The method of construction and any required temporary support is of paramount importance in the design of spliced precast girder bridges. Such considerations often govern final conditions in the selection of section dimensions and reinforcing and/or prestressing.

All supports required prior to the splicing of the girder shall be shown on the contract documents, including elevations and reactions. The stage of construction during which the temporary supports are removed shall also be shown on the contract documents. Stresses due to changes in the structural system, in particular, the effects of the application of load to one structural system and its removal from a different structural system, shall be accounted for. Redistribution of such stresses by creep shall be taken into account and allowance shall be made for possible variations in the creep rate and magnitude.

Prestress losses in spliced precast girder bridges may be estimated using the provisions of Section 5.1.4. The effects of combined pretensioning and post tensioning and staged post tensioning shall be considered. When required, the effects of creep and shrinkage in spliced precast girder bridges may be estimated using the provisions of Section 5.1.1.

5.9.2 WSDOT Criteria for use of Spliced Girders

Long span prestressed concrete girder bridges may bear increased costs due to difficulties encountered during the fabrication, shipping and erection of such long one-piece girders. Providing an alternate spliced-girder design to long span one-piece pretensioned girders may eliminate the excessive cost through competitive bidding. The following procedure for alternative design of prestressed concrete girders shall be followed:

- All prestressed concrete girders with shipping weight less than 190 kips shall be pre-tensioned only (no alternative design).
- All prestressed concrete girders with shipping weight between 190 and 240 kips shall include both pretensioned and post-tensioned spliced prestressed concrete girder alternatives as part of the PS&E, with post-tensioning to be applied before the casting of deck slab. Post-tensioning may be applied after the casting of deck slab at the option of the Contractor with approval of the designer of record.
- All prestressed concrete girders with shipping weight exceeding 240 kips shall be spliced prestressed concrete girders, with post-tensioning applied after the casting of the girder closures and deck slab.
- For pretensioned concrete girders, the total number of permanent prestressing strands (straight and harped) shall be limited to 100-0.6” diameter strands.

When a spliced prestressed concrete girder alternative is presented in the Plans, the substructure shall be designed and detailed for the maximum force effect case only (no alternative design for substructure).

Shipping long girder segments may also be constrained by highway route or local features in some cases. It is therefore prudent to verify delivery for unusually long girders.

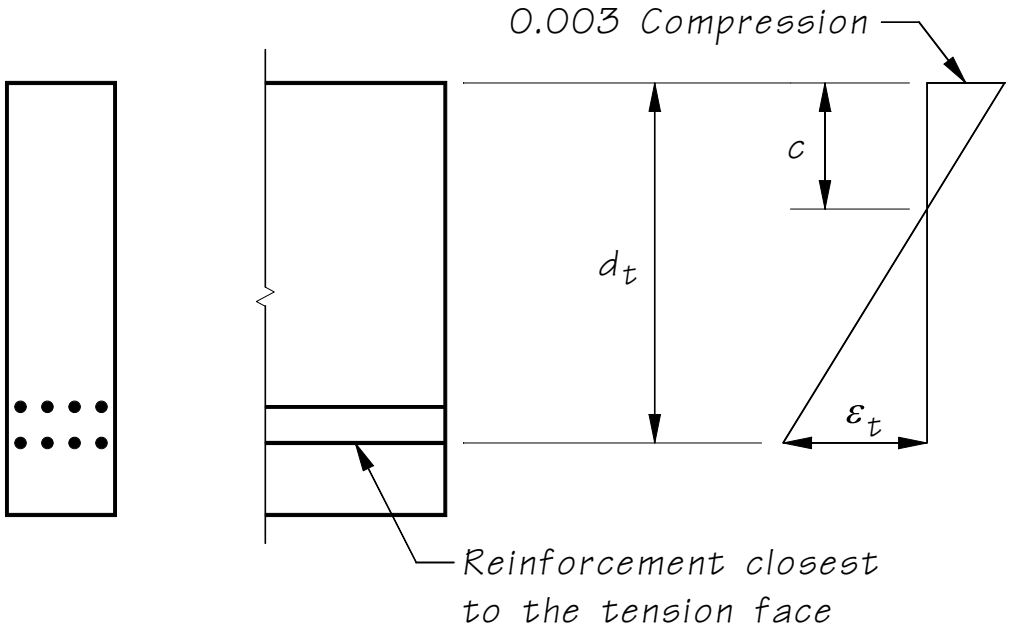

Figure 5.9.2-1

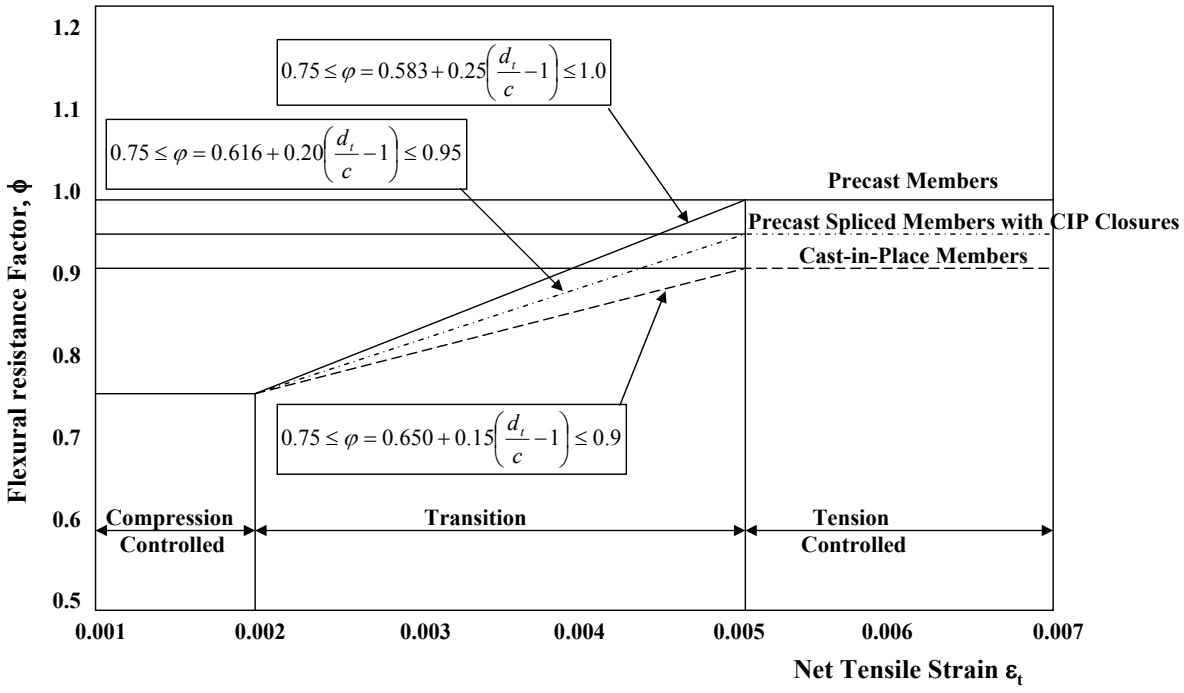

Variation of ϕ with Net Tensile Strain ε_t

Figure 5.9.2-2

5.9.3 Girder Segment Design

A. Design Considerations

Stress limits for temporary concrete stresses in girder segments before losses and stress limits for concrete stresses in girder segments at the service limit state after losses specified in BDM Section 5.1.3 shall apply at each stage of pretensioning or post tensioning with due consideration for all applicable loads during construction. The concrete strength at the time the stage of prestressing is applied shall be substituted for f'_{ci} in the stress limits.

The designer shall consider requirements for bracing of the girder segments once they have been erected on the substructure. Any requirements for temporary or permanent bracing during subsequent stages of construction, along with the contractor's responsibilities for designing and placing them, shall be specified in the contract documents.

B. Post tensioning

Post tensioning may be applied either before and/or after placement of deck concrete. Part of the post tensioning may be applied prior to placement of the deck concrete, with the remainder placed after deck concrete placement. In the case of multistage post tensioning, ducts for tendons to be tensioned before the slab concrete shall not be located in the slab.

All post tensioning tendons shall be fully grouted after stressing. Prior to grouting of post tensioning ducts, gross cross-section properties shall be reduced by deducting the area of ducts and void areas around tendon couplers.

Where some or all post tensioning is applied after the deck concrete is placed, fewer post tensioning tendons and a lower concrete strength in the closure joint may be required. However, deck replacement, if necessary, is difficult to accommodate with this construction sequence. Where all of the post tensioning is applied before the deck concrete is placed, a greater number of post tensioning tendons and a higher concrete strength in the closure joint may be required. However, in this case, the deck can be replaced if necessary.

5.9.4 Joints Between Segments

A. General

Cast-in-place closure joints are typically used in spliced girder construction. The sequence of placing concrete for the closure joints and deck shall be specified in the contract documents. Match-cast joints shall not be specified for spliced girder bridges unless approved by the Bridge Design Engineer. Prestress, dead load and creep effects may cause rotation of the faces of the match-cast joints prior to splicing. If match cast joint is specified, the procedures for splicing the girder segments that overcome this rotation to close the match-cast joint should be shown on the contract plans.

B. Location of Closure Joints

The location of intermediate diaphragms shall be offset by at least 2'-0" from the edge of cast-in-place closure joints. The intent of the joint width requirement is to allow proper compaction of concrete in the cast-in-place closure joint. A wider closure joint may be used to provide more room to accommodate tolerances for potential misalignment of ducts within girder segments and misalignment of girder segments at erection.

In horizontally curved spliced girder bridges, intermediate diaphragms could be located at the cast-in-place closure joints if straight segments are spliced with deflection points at closures. In this case, diaphragm could be extended beyond the face of exterior girder for improved development of diaphragm reinforcement.

C. Details of Closure Joints

The width of a closure joint between precast concrete segments shall allow for the splicing of steel whose continuity is required by design considerations and the accommodation of the splicing of post tensioning ducts. The width of a closure joint shall not be less than 24.0 in.

Web reinforcement, A_V/s within the joint shall be the larger of that in the adjacent girders. The face of the precast segments at closure joints shall be specified as intentionally roughened surface.

D. Joint Design

Stress limits for temporary concrete stresses in joints before losses specified in Section 5.1.3 for shall apply at each stage of prestressing post tensioning. The concrete strength at the time the stage of prestressing is applied shall be substituted for f'_{ci} in the stress limits.

Stress limits for concrete stresses in joints at the service limit state after losses specified in Section 5.1.3 for shall apply. These stress limits shall also apply for intermediate load stages, with the concrete strength at the time of loading substituted for f'_c in the stress limits. The compressive strength of the closure joint concrete at a specified age shall be compatible with design stress limitations. Resistance factors for cast-in-place closure joints shall be 0.95 for flexure and 0.9 for shear.

5.9.5 Review of shop plans for precast post-tensioned spliced-girders

Shop drawings for precast post-tensioned spliced-girders should be reviewed by the designer (or Bridge Technical Advisor for non bridge office projects) and consulted with the concrete specialist if needed. Shop drawings, after reviewed by the design engineer should be stamped with the official rubber seal and returned to the bridge construction support office. Review of shop drawing must include:

1. All prestressing strands shall be of ½" or 0.6" diameter grade 270 low relaxation uncoated strands.
2. Number of strands per segment shall be specified in the shop drawings and shall conform to the contract plans.
3. Pretensioning strands jacking stresses shall not exceed $0.75f_{pu}$.
4. Strand placement patterns shall be verified per contract plans.
5. Temporary Strand placement patterns, location and size of blockouts for cutting strands shall be verified per contract plans.
6. Procedure for cutting temporary strands and patching the blockouts shall be specified.
7. Number and length of extended strands and rebars at girder ends shall be verified per contract plans.
8. Location of holes and shear keys for intermediate and end diaphragms shall be verified per contract plans.
9. Location and size of bearing recesses shall be verified per contract plans.
10. Saw tooth at girder ends shall be verified per contract plans.
11. Location and size of lifting loops or lifting bars shall be verified per contract plans.
12. Number and size of horizontal and vertical reinforcement shall be verified per contract plans.
13. Segment length and end skew shall be verified per contract plans.
14. Tendon profile and tendon placement pattern shall be verified per contract plans.
15. Duct size shall be based on the duct area at least 2.5 times the total area of prestressing strands.
16. Anchor set shall conform to the contract plans. The post-tensioning design is typically based on an anchor set of ⅜".
17. Maximum number of strands per tendon shall not exceed 31½" diameter strands or 22 - 0.6" diameter strands per Standard Specifications 6-02.3(26) D.
18. Jacking force per girder shall be verified per contract plans.
19. Prestress force after anchor set (lift-off force) shall conform to contract plans.
20. Number of strands per web shall be specified in the shop drawings and shall conform to the contract plans.
21. Anchorage system shall conform to pre-approved list of post-tensioning system per BDM Appendix B. The anchorage assembly dimensions and reinforcement detailing shall conform to the corresponding post-tensioning catalog.

22. The curvature friction coefficient and wobble friction coefficient shall conform to the contract plans. The curvature friction coefficient of μ= 0.15 for bridges less than 400 feet, μ= 0.2 for bridges between 400 feet and 800 feet, and μ= 0.25 for bridges longer than 800 feet. The wobble friction coefficient of k = 0.0002 /ft is often used. These coefficients may be revised by the post-tensioning supplier if approved by the design engineer and conform to the Standard Specifications 6.02.3(26) E.
23. Post-tensioning stressing sequence shall be in accordance with the contract plan post-tensioning Notes.
24. Tendon stresses shall not exceed as specified per Figure 5.8.3-2:
    $0.80f_{pu}$ at anchor ends immediately before seating.
    $0.70f_{pu}$ at anchor ends immediately after seating.
    $0.74f_{pu}$ at the end point of length influenced by anchor set.
25. Elongation calculations for each jacking operation shall be verified. If the difference in tendon elongation exceeds 2%, the elongation calculations shall be separated for each tendon per Standard Specification 6-02.3(26) A.
26. Vent points shall be provided at all high points along tendon.
27. Drain holes shall be provided at all low points along tendon.
28. The concrete strength at the time of post-tensioning, f'_{ci} shall not be less than 4000 psi per Standard Specifications 6-02.3(26)E. Different concrete strength may be used if specified in the contract plans.
29. Concrete stresses at the anchorage shall be checked per Standard Specifications 6-02.3(26)C-1 for bearing type anchorage. For other type of anchorage assemblies, if not covered in the Appendix 5-B2 for pre-approved list of post-tensioning system, testing per Standard Specifications 6-02.3(26)B is required.
30. Concrete stresses at cast-in-place closures shall conform to allowable stresses of Table 5.2.3-1.

5.9.6 Post-Tensioning Notes ~ Precast Post-Tensioning Spliced-Girders

1. The cast-in-place concrete in deck slab shall be Class 4000D. The minimum compressive strength of the cast-in-place concrete at the wet joint at the time of post-tensioning shall be …. ksi.
2. The minimum prestressing load after seating and the minimum number of prestressing strands for each girder shall be as shown in post-tensioning table.
3. The design is based on ….. inch diameter low relaxation strands with a jacking load for each girder as shown in post-tensioning table, an anchor set of ⅜ inch a curvature friction coefficient, μ= 0.20 and a wobble friction coefficient, k = 0.0002 /ft. The actual anchor set used by the contractor shall be specified in the shop plans and included in the transfer force calculations.
4. The design is based on the estimated prestress loss of post-tensioned prestressing strands as shown in post-tensioning table due to steel relaxation, elastic shortening, creep and shrinkage of concrete.
5. The contractor shall submit the stressing sequence and elongation calculations to the engineer for approval. All losses due to tendon vertical and horizontal curvature must be included in elongation calculations. The stressing sequence shall meet the following criteria:

6. The prestressing force shall be distributed with an approximately equal amount in each web and shall be placed symmetrically about the centerline of the bridge.
7. No more than one-half of the prestressing force in any web may be stressed before an equal force is stressed in the adjacent webs. At no time during stressing operation will more than one-sixth of the total prestressing force is applied eccentrically about the centerline of bridge.
8. The maximum outside diameter of the duct shall be …. inches. The area of the duct shall be at least 2.5 times the net area of the prestressing steel in the duct.
9. All tendons shall be stressed from pier ….

5.99 Bibliography

1. AASHTO, LRFD Bridge Design Specifications, 2nd Edition, American Association of State Highway and Transportation Officials, Washington, D.C.
2. AASHTO LRFD Bridge Construction Specifications, 1st Edition 1998, AASHTO, Washington, D.C., 1998.
3. WSDOT Standard Specifications for Highway Bridges and Municipal Construction, Olympia, Washington 98501.
4. ACI Committee 317, Reinforced Concrete Design Handbook — Working Stress Method, Publication SP-3, American Concrete Institute, 3rd Ed., 1965, 271 pp.
5. Seguirant, S.J., "New Deep WSDOT Standard Sections Extend Spans of Prestressed Concrete Girders," PCI JOURNAL, V. 43, No. 4, July-August 1998, pp. 92-119.
6. PCI Bridge Design Manual, Precast/Prestressed Concrete Institute, Chicago, IL, 1997.
7. ACI 318-02, Building Code Requirements for Reinforced Concrete and Commentary, American Concrete Institute, 1989, pp.353.
8. Ghosh, S. K. and Rabbat, B. G., Editors, Notes on ACI 318-89, Building Code Requirements for Reinforced Concrete with Design Applications, Portland Cement Association, 5th ed., 1990.
9. ACI-ASCE Committee 343, Analysis and Design of Reinforced Concrete Bridge Structures, American Concrete Institute, 1988, 162 pp.
10. Hsu, T. T. C., Torsion of Reinforced Concrete, Van Nostrand Reinhold Co., New York, 1st Ed., 1984, 516 pp.
11. Collins, M. P. and Mitchell, D., Shear and Torsion Design of Prestressed and Non-Prestressed Concrete Beams, PCI Journal, September-October, 1980, pp. 32-100.
12. Mirza, S.A., and Furlong, R.W., Design of Reinforced and Prestressed Concrete Inverted T Beams for Bridge Structures, PCI Journal, Vol. 30, No. 4, July-August 1985, pp. 112-136.
13. Rabbat, B.G., Reader Comments Design of Reinforced and Prestressed Concrete inverted T Beams for Bridge Structures, PCI Journal, Vol. 31, No. 3, May-June 1986, pp. 157-163.
14. AASHTO Standard Specifications for Highway Bridges, 16th Edition, AASHTO, Washington, D.C., 1996.
15. ACI Committee 345, Guide for Widening Highway Bridges, ACI Structural Journal, July/August, 1992, pp. 451-466.
16. Babaei, K. and Hawkins, N. M., Bending/Straightening and Grouting Concrete Reinforcing Steel: Review of WSDOT's Specifications and Proposed Modifications, Final Report WA-RD 168.1, Washington State Transportation Center (TRAC), December 1988, 75 pp.
17. PCI Design Handbook, Precast and Prestressed Concrete, Fifth Edition, Precast/Prestressed Concrete Institute, Chicago, IL, 1999.
18. Mast, R.F., "Lateral Stability of Long Prestressed Concrete Beams, Part 1," PCI JOURNAL, V. 34, No. 1, January-February 1989, pp. 34-53.
19. Mast, R.F., "Lateral Stability of Long Prestressed Concrete Beams, Part 2," PCI JOURNAL, V. 38, No. 1, January-February 1993, pp. 70-88.
20. Imper, R.R., and Laszlo, G., "Handling and Shipping of Long Span Bridge Beams," PCI JOURNAL, V. 32, No. 6, November-December 1987, pp. 86-101.

21. Preapproved Repair Procedures, WSDOT Manual for Repair of Concrete.
22. Transportation Research Board Report No. 226 titled, Damage Evaluation and Repair Methods for Prestressed Concrete Bridge Members.
23. Transportation Research Board Report No. 280 titled, Guidelines for Evaluation and Repair of Prestressed Concrete Bridge Members.
24. Post-Tensioned Box Girder Bridge Manual, Post-Tensioning Institute, 301 West Osborn, Phoenix, Arizona.
25. Prestressed Concrete Structures T. Y. Lin, Wiley.
26. Prestressed Concrete Vol. I and II, Guyon, Wiley
27. Design of Concrete Bridges for Temperature Gradients, ACI Journal, May 1978.
28. Cracking of Voided Post-Tensioned Concrete Bridge Decks, Ministry of Transportation and Communications, Toronto, Ontario, Canada
29. Post-Tensioned Bridges - Design & Construction Manual of WCRSI, 1499 Bayshore Highway, Burlingame, California, Copyright 1969.
30. Analysis & Design of Reinforced Concrete Bridge Structures, ACI Committee 443 Report 71-14 ACI Journal, April 1974.
31. Mast, R. F., "Unified Design Provisions for Reinforced and Prestressed Concrete Flexural and Compression Members", ACI Structural Journal, V. 89, No. 2, March-April 1992, pp. 185-199. See also discussions by R.K. Devalapura and M.K. Tadros, C.W. Dolan and J.V. Loscheider and closure to discussions in V. 89, No. 5, September-October 1992, pp. 591-593.
32. Weigel, J.A., Seguirant, S.J., Brice, R., and Khaleghi, B., "High Performance Precast, Prestressed Concrete Girder Bridges in Washington State," PCI JOURNAL, V. 48, No. 2, March-April 2003, pp. 28-52.
33. Seguirant, S. J., Brice, R., and Khaleghi, B., "Flexural Strength of Reinforced and restressed Concrete T-Beams," ," PCI JOURNAL, V. 50, No. 1, January-February 2005, pp 44-73.
34. Baran, E., Schultz, A. E., and French, C. E., "Analysis of the Flexural Strength of Prestressed Concrete Flanged Sections", PCI JOURNAL, V. 50, No. 1, January-February 2005, pp. 74-93.

RECOMMENDED END HOOKS
All Grades
D = Finished bend diameter

Bar Size	D	180° HOOKS		90° HOOKS
		A or G	J	A or G
#3	2¼"	5"	3"	6"
#4	3"	6"	4"	8"
#5	3¾"	7"	5"	10"
#6	4½"	8"	6"	1'-0"
#7	5¼"	10"	7"	1'-2"
#8	6"	11"	8"	1'-4"
#9	9½"	1'-3"	11¾"	1'-7"
#10	10¾"	1'-5"	1'-1¼"	1'-10"
#11	1'-0"	1'-7"	1'-2¾"	2'-0"
#14	1'-6¼"	2'-3"	1'-9¾"	2'-7"
#18	2'-0"	3'-0"	2'-4½"	3'-5"

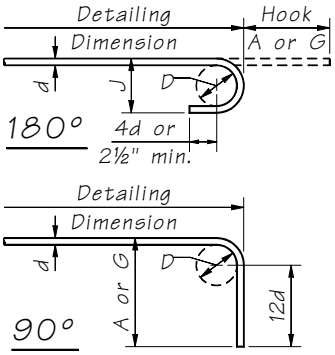

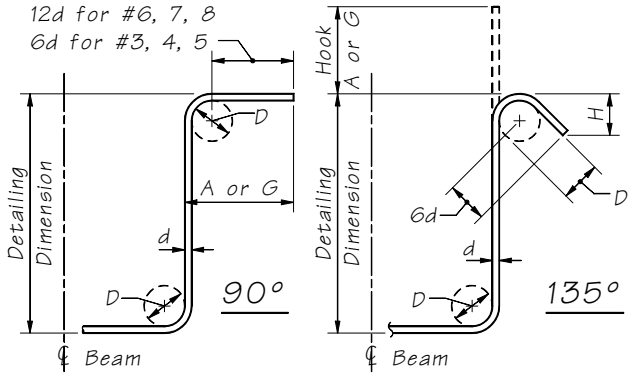

STIRRUP AND TIE HOOK DIMENSIONS
All Grades

Bar Size	D	90° HOOKS	135° HOOKS	
		Hook A or G	Hook A or G	H Approx.
#3	1½"	4"	4"	2½"
#4	2"	4½"	4½"	3"
#5	2½"	6"	5½"	3¾"
#6	4½"	1'-0"	8"	4½"
#7	5¼"	1'-2"	9"	5¼"
#8	6"	1'-4"	10½"	6"

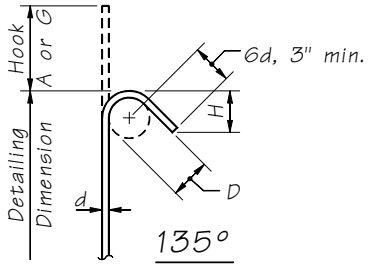

135° SEISMIC STIRRUP/TIE
HOOK DIMENSIONS
All Grades

Bar Size	D	135° HOOKS	
		Hook A or G	H Approx.
#3	1½"	4¼"	3"
#4	2"	4½"	3"
#5	2½"	5½"	3¾"
#6	4½"	8"	4½"
#7	5¼"	9"	5¼"
#8	6"	10½"	6"

(DISTANCES IN INCHES)

Bar Size	A	B	C	D
#4	3¼	4	-	-
5	3½	4¼	-	-
6	3¾	4½	-	-
7	4	4¾	-	-
8	4¼	5	4½	5½
9	4½	5¼	4¾	6
10	4¾	5½	5	6¼
11	5	6	5⅛	6½
14	5½	7	5½	7¼
18	6	8½	6¾	9

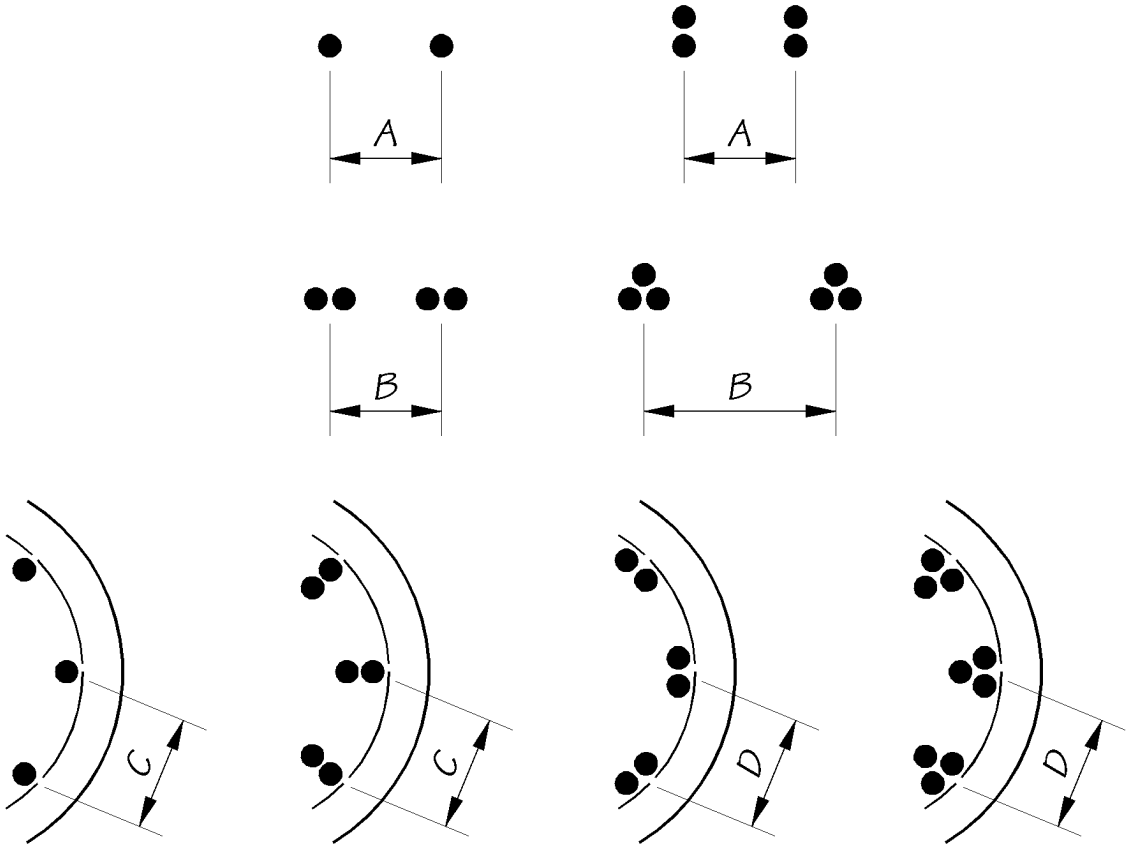

Appendix 5.1-A3 Reinforcing Bar Properties

Bar Size	Weight (lbs/ft)	Nominal Diameter (in)	Outside Diameter (in)	Area (in^2)	Max. Bar Length (Normal Length for Barlist) (ft)
#3	0.376	0.375	0.42	0.11	40 (30)
#4	0.668	0.500	0.56	0.20	40 (40)
#5	1.043	0.625	0.70	0.31	60 (40)
#6	1.502	0.750	0.83	0.44	60 (60)
#7	2.044	0.875	0.96	0.60	60 (60)
#8	2.670	1.000	1.10	0.79	72 (60)
#9	3.400	1.128	1.24	1.00	72 (60)
#10	4.303	1.270	1.40	1.27	72 (60)
#11	5.313	1.410	1.55	1.56	90 (60)
#14	7.65	1.693	1.86	2.25	90 (60)
#18	13.60	2.257	2.48	4.00	90 (60)

Tension Development Length of Uncoated Deformed Bars								
Bar Size	f'_c = 3000 psi		f'_c = 4000 psi		f'_c = 5000 psi		f'_c = 6000 psi	
	Top Bars	Others	Top Bars	Others	Top Bars	Others	Top Bars	Others
#3	1’-5”	1’-0”	1’-5”	1’-0”	1’-5”	1’-0”	1’-5”	1’-0”
#4	1’-5”	1’-0”	1’-5”	1’-0”	1’-5”	1’-0”	1’-5”	1’-0”
#5	1’-9”	1’-3”	1’-9”	1’-3”	1’-9”	1’-3”	1’-9”	1’-3”
#6	2’-3”	1’-8”	2’-2”	1’-6”	2’-2”	1’-6”	2’-2”	1’-6”
#7	3’-1”	2’-3”	2’-8”	1’-11”	2’-6”	1’-9”	2’-6”	1’-9”
#8	4’-1”	2’-11”	3’-6”	2’-6”	3’-2”	2’-3”	2’-11”	2’-1”
#9	5’-2”	3’-8”	4’-6”	3’-2”	4’-0”	2’-10”	3’-8”	2’-7”
#10	6’-6”	4’-8”	5’-8”	4’-1”	5’-1”	3’-8”	4’-8”	3’-4”
#11	8’-0”	5’-9”	6’-11”	5’-0”	6’-3”	4’-5”	5’-8”	4’-1”
#14	10’-11”	7’-10”	9’-5”	6’-9”	8’-5”	6’-1”	7’-9”	5’-6”
#18	14’-1”	10’-1”	12’-3”	8’-9”	10’-11”	7’-10”	10’-0”	7’-2”
Tension Development Length of Epoxy Coated Deformed Bars								
Bar Size	f'_c = 3000 psi		f'_c = 4000 psi		f'_c = 5000 psi		f'_c = 6000 psi	
	Top Bars	Others	Top Bars	Others	Top Bars	Others	Top Bars	Others
#3	1’-9”	1’-6”	1’-9”	1’-6”	1’-9”	1’-6”	1’-9”	1’-6”
#4	1’-9”	1’-6”	1’-9”	1’-6”	1’-9”	1’-6”	1’-9”	1’-6”
#5	2’-2”	1’-11”	2’-2”	1’-11”	2’-2”	1’-11”	2’-2”	1’-11”
#6	2’-9”	2’-5”	2’-7”	2’-3”	2’-7”	2’-3”	2’-7”	2’-3”
#7	3’-9”	3’-4”	3’-3”	2’-11”	3’-0”	2’-8”	3’-0”	2’-8”
#8	4’-11”	4’-4”	4’-3”	3’-9”	3’-10”	3’-5”	3’-6”	3’-1”
#9	6’-3”	5’-6”	5’-5”	4’-9”	4’-10”	4’-3”	4’-5”	3’-11”
#10	7’-11”	7’-0”	6’-10”	6’-1”	6’-2”	5’-5”	5’-7”	4’-11”
#11	9’-9”	8’-7”	8’-5”	7’-5”	7’-6”	6’-8”	6’-11”	6’-1”
#14	13’-3”	11’-8”	11’-6”	10’-1”	10’-3”	9’-1”	9’-4”	8’-3”
#18	17’-1”	15’-1”	14’-10”	13’-1”	13’-3”	11’-8”	12’-1”	10’-8”

Top bars are so placed that more than 12” of concrete is cast below the reinforcement.
Modifications factor for spacing >=6” and side cover>=3” = 0.8.
Modification factor for reinforcements enclosed in spirals = 0.75.
Minimum development length = 12”.

Compression Development Length and Appendix 5.1-A5 Minimum Lap Splice of Grade 60 Bars

Compression Development Length and Minimum Lap splice of Uncoated Deformed Bars

Bar Size	Compression Development Length					Min. Lap Splice f'c > 3.0 ksi
	Straight Bars				Hooked Bars	
	f'c = 3 ksi	f'c = 4 ksi	f'c = 5 ksi	f'c = 6 ksi		
#3	1'-0"	1'-0"	1'-0"	1'-0"	6"	2'-0"
#4	1'-0"	1'-0"	1'-0"	1'-0"	7"	2'-0"
#5	1'-2"	1'-0"	1'-0"	1'-0"	9"	2'-0"
#6	1'-5"	1'-3"	1'-2"	1'-2"	10"	2'-0"
#7	1'-8"	1'-5"	1'-4"	1'-4"	1'-0"	2'-3"
#8	1'-10"	1'-7"	1'-6"	1'-6"	1'-2"	2'-6"
#9	2'-1"	1'-10"	1'-9"	1'-9"	1'-3"	2'-10"
#10	2'-4"	2'-1"	1'-11"	1'-11"	1'-5"	3'-3"
#11	2'-7"	2'-3"	2'-2"	2'-2"	1'-7"	3'-7"
#14	3'-1"	2'-9"	2'-7"	2'-7"	2'-10	4'-3"
#18	4'-2"	3'-7"	3'-5"	3'-5"	3'-7"	5'-8"

Compression Development Length and Minimum Lap splice of Epoxy Coated Deformed Bars

Bar Size	Compression Development Length					Min. Lap Splice f'c > 3.0 ksi
	Straight Bars				Hooked Bars	
	f'c = 3 ksi	f'c = 4 ksi	f'c = 5 ksi	f'c = 6 ksi		
#3	1'-0"	1'-0"	1'-0"	1'-0"	6"	2'-0"
#4	1'-0"	1'-0"	1'-0"	1'-0"	7"	2'-0"
#5	1'-2"	1'-0"	1'-0"	1'-0"	9"	2'-0"
#6	1'-5"	1'-3"	1'-2"	1'-2"	10"	2'-0"
#7	1'-8"	1'-5"	1'-4"	1'-4"	1'-0"	2'-3"
#8	1'-10"	1'-7"	1'-6"	1'-6"	1'-2"	2'-6"
#9	2'-1"	1'-10"	1'-9"	1'-9"	1'-3"	2'-10"
#10	2'-4"	2'-1"	1'-11"	1'-11"	1'-5"	3'-3"
#11	2'-7"	2'-3"	2'-2"	2'-2"	1'-7"	3'-7"
#14	3'-1"	2'-9"	2'-7"	2'-7"	2'-10	4'-3"
#18	4'-2"	3'-7"	3'-5"	3'-5"	3'-7"	5'-8"

Notes:

1. Where excess bar area is provided, the development length may be reduced by ratio of required area to provided area.
2. When splicing smaller bars to larger bars, the lap splice shall be the larger of the minimum compression lap splice or development length of the larger bar in compression.

Appendix 5.1-A6 Tension Development Length of 90º and 180º Standard Hooks

Bar Size	f'_c = 3000 psi		f'_c = 4000 psi		f'_c = 5000 psi		f'_c = 6000 psi	
	Side Cover < 2½" Cover on Tail < 2"	Side Cover >= 2½" Cover on Tail >= 2"	Side Cover < 2½" Cover on Tail < 2"	Side Cover >= 2½" Cover on Tail >= 2"	Side Cover < 2½" Cover on Tail < 2"	Side Cover >= 2½" Cover on Tail >= 2"	Side Cover < 2½" Cover on Tail < 2"	Side Cover >= 2½" Cover on Tail >= 2"
#3	0'-9"	0'-6"	0'-8"	0'-6"	0'-7"	0'-6"	0'-6"	0'-6"
#4	0'-11"	0'-8"	0'-10"	0'-7"	0'-9"	0'-7"	0'-8"*	0'-7"
#5	1'-2"	0'-10"	1'-0"	0'-9"	0'-11"	0'-8"	0'-10"	0'-7"
#6	1'-5"	1'-0"	1'-3"	0'-10"	1'-1"	0'-9"	1'-0"	0'-8"
#7	1'-8"	1'-2"	1'-5"	1'-0"	1'-3"	0'-11"	1'-2"	0'-10"
#8	1'-10"	1'-4"	1'-7"	1'-2"	1'-5"	1'-0"	1'-4"	0'-11"
#9	2'-1"	1'-6"	1'-10"	1'-3"	1'-8"	1'-2"	1'-6"	1'-1"
#10	2'-4"	1'-8"	2'-1"	1'-5"	1'-10"	1'-3"	1'-8"	1'-2"
#11	2'-7"	1'-10"	2'-3"	1'-7"	2'-0"	1'-5"	1'-10"	1'-4"
#14	3'-1"	3'-1"	2'-9"	2'-9"	2'-5"	2'-5"	2'-3"	2'-3"
#18	4'-2"	4'-2"	3'-7"	3'-7"	3'-3"	3'-3"	2'-11"	2'-11"

Modification factor for Epoxy coated reinforcement = 1.2.

Tension Lap Splice Lengths of Grade 60 Uncoated Bars ~ Class B

Bar Size	f'_c = 3000 psi		f'_c = 4000 psi		f'_c = 5000 psi		f'_c = 6000 psi	
	Top Bars	Others	Top Bars	Others	Top Bars	Others	Top Bars	Others
#3	2’-0”	2’-0”	2’-0”	2’-0”	2’-0”	2’-0”	2’-0”	2’-0”
#4	2’-0”	2’-0”	2’-0”	2’-0”	2’-0”	2’-0”	2’-0”	2’-0”
#5	2’-4”	2’-0”	2’-4”	2’-0”	2’-4”	2’-0”	2’-4”	2’-0”
#6	2’-11”	2’-1”	2’-9”	2’-0”	2’-9”	2’-0”	2’-9”	2’-0”
#7	4’-0”	2’-11”	3’-6”	2’-6”	3’-3”	2’-4”	3’-3”	2’-4”
#8	5’-3”	3’-9”	4’-7”	3’-3”	4’-11”	2’-11”	3’-9”	2’-8”
#9	6’-8”	4’-9”	5’-9”	4’-2”	5’-2”	3’-9”	4’-9”	3’-5”
#10	8’-6”	6’-1”	7’-4”	5’-3”	6’-7”	4’-8”	6’-0”	4’-4”
#11	10’-5”	7’-5”	9’-0”	6’-5”	8’-1”	5’-9”	7’-4”	5’-3”
#14	Lap Splices		Lap Splices		Lap Splices		Lap Splices	
#18	Not Allowed		Not Allowed		Not Allowed		Not Allowed	

Tension Lap Splice Lengths of Grade 60 Epoxy Coated Bars ~ Class B

Bar Size	f'_c = 3000 psi		f'_c = 4000 psi		f'_c = 5000 psi		f'_c = 6000 psi	
	Top Bars	Others	Top Bars	Others	Top Bars	Others	Top Bars	Others
#3	2’-3”	2’-0”	2’-3”	2’-0”	2’-3”	2’-0”	2’-3”	2’-0”
#4	2’-3”	2’-0”	2’-3”	2’-0”	2’-3”	2’-0”	2’-3”	2’-0”
#5	2’-10”	2’-6”	2’-10”	2’-6”	2’-10”	2’-6”	2’-10”	2’-6”
#6	3’-7”	3’-2”	3’-4”	3’-0”	3’-4”	3’-0”	3’-4”	3’-0”
#7	4’-11”	4’-4”	4’-3”	3’-9”	3’-11”	3’-5”	3’-11”	3’-5”
#8	6’-5”	5’-8”	5’-7”	4’-11”	5’-0”	4’-5”	4’-6”	4’-0”
#9	8’-1”	7’-2”	7’-0”	6’-2”	6’-3”	5’-7”	5’-9”	5’-1”
#10	10’3”	9’-1”	8’-11”	7’-10”	8’-0”	7’-0”	7’-3”	6’-5”
#11	12’-8”	11’-2”	10’-11”	9’-8”	9’-9”	8’-0”	8’-11”	7’-11”
#14	Lap Splices		Lap Splices		Lap Splices		Lap Splices	
#18	Not Allowed		Not Allowed		Not Allowed		Not Allowed	

Top bars are so placed that more than 12” of concrete is cast below the reinforcement.

Modification factor for spacing >=6” and side cover>=3” = 0.8.

Modification factor for reinforcements enclosed in spirals = 0.75.

Definition of splice classes:

Class A: Low stressed bars ~ 75% or less are spliced

Class B: Low stressed bars ~ more than 75% are spliced
High stressed bars ~ 50% or less are spliced

Class C: High stressed bars ~ more than 50% are spliced

Class B lap splice is the preferred and most commonly used by Bridge Office.

Modification factor for Class A = 0.77
Modification factor for Class C = 1.31
Modification factor for 3-bar bundle = 1.2

Appendix 5.1-A8 Prestressing Strand Properties and Development Length

Uncoated Prestressing Strands Properties and Development Length

Strand Diameter (in)	Weight (lbs/ft)	Nominal Diameter (in)	Area (in^2)	Transfer length (in)	Develop. Length k = 1.0 (ft)	Develop. Length k = 1.6 (ft)
3/8	0.29	0.375	0.085	22.5	5.05	8.09
7/16	0.40	0.438	0.115	26.3	5.90	9.43
½	0.52	0.500	0.153	30.0	6.74	10.78
½ S	0.53	0.500	0.167	30.0	6.74	10.78
9/16	0.65	0.563	0.192	33.8	7.58	12.13
0.60	0.74	0.600	0.217	36.0	8.09	12.94

Epoxy Coated Prestressing Strands Properties and Development Length

Strand Diameter (in)	Weight (lbs/ft)	Nominal Diameter (in)	Area (in^2)	Transfer length (in)	Develop. Length k = 1.0 (ft)	Develop. Length k = 1.6 (ft)
3/8	0.31	0.415	0.085	24.9	5.59	8.95
7/16	0.42	0.478	0.115	28.7	6.44	10.31
½	0.54	0.540	0.153	32.4	7.28	11.64
0.60	0.64	0.648	0.217	38.9	8.73	13.97

Service Load — Concrete Stresses and Constants

		CLASS	CLASS
n	(See E_c below)	8	10
f_c'		4000 p.s.i.	3000 p.s.i.
f_c	(Compression)	1600	1200
f_t	(Tension) Use only with special permission	100	86
f_s	(Grade 40)	20,000	20,000
f_s	(Grade 60)	24,000	24,000
v_c	(With web reinf.)	313	271
v_c		60 *	52 *
	Slabs & Footings (Peripheral Shear)		
	v_c	114	99
	v_c (With web reinf.)	190	164
K	(f_s = 24000)	246	
K		272	197
k	Balanced rectangular sections	.390	.375
j		.870	.875
p		.0156	.01125
E_c	(for stress calc.) (n as above)	522,000 #/a'	418,000 #/a'
E_c	(for short term defl. due to E.Q., etc.) (n = 8)	522,000	522,000
E_c	(for D.L. Camber of Slabs, T&S Moms., Settlement) (n=16)	261,000	261,000
E_c	(for D.L. Camber, except slabs) (n = 24)	174,000	174,000

Temp. Coeff. = .000006 1/1° ~ 45° Drop to 35° Rise ~ All climates.
Shrinkage Coeff. = .0002% (Temp. rise & shrinkage cancel).

* For more detailed analysis $v_c = 0.9 (f'_c)^{\frac{1}{2}} + 1100 \rho_w \left(\frac{V_d}{M}\right)$
See 1974 A.A.S.H.T.O. Interim I.5.29 (B)(2).

Stirrup spacing ; (Kip & inch units) $S = \frac{A_s \times f_s \times jd}{V - V_c} = \frac{A_s \times 20 \times 7/8\, d}{V_s} = \frac{17.50\, A_s \times d}{V_s}$

A_s = Total area of stirrup legs.
V_s = Total shear taken by stirrups.
V = Total shear on section.
V_c = Total shear by conc. = $v_c \times bjd$

o

$d = \sqrt{M/bK}$ (Balanced rectangular section)

$f_c = \frac{2M}{kjbd^2}$ (Rectangular section)

$f_s = \frac{M}{A_s jd}$

$v = \frac{V}{bjd}$

$n = \frac{E_s}{E_c}$

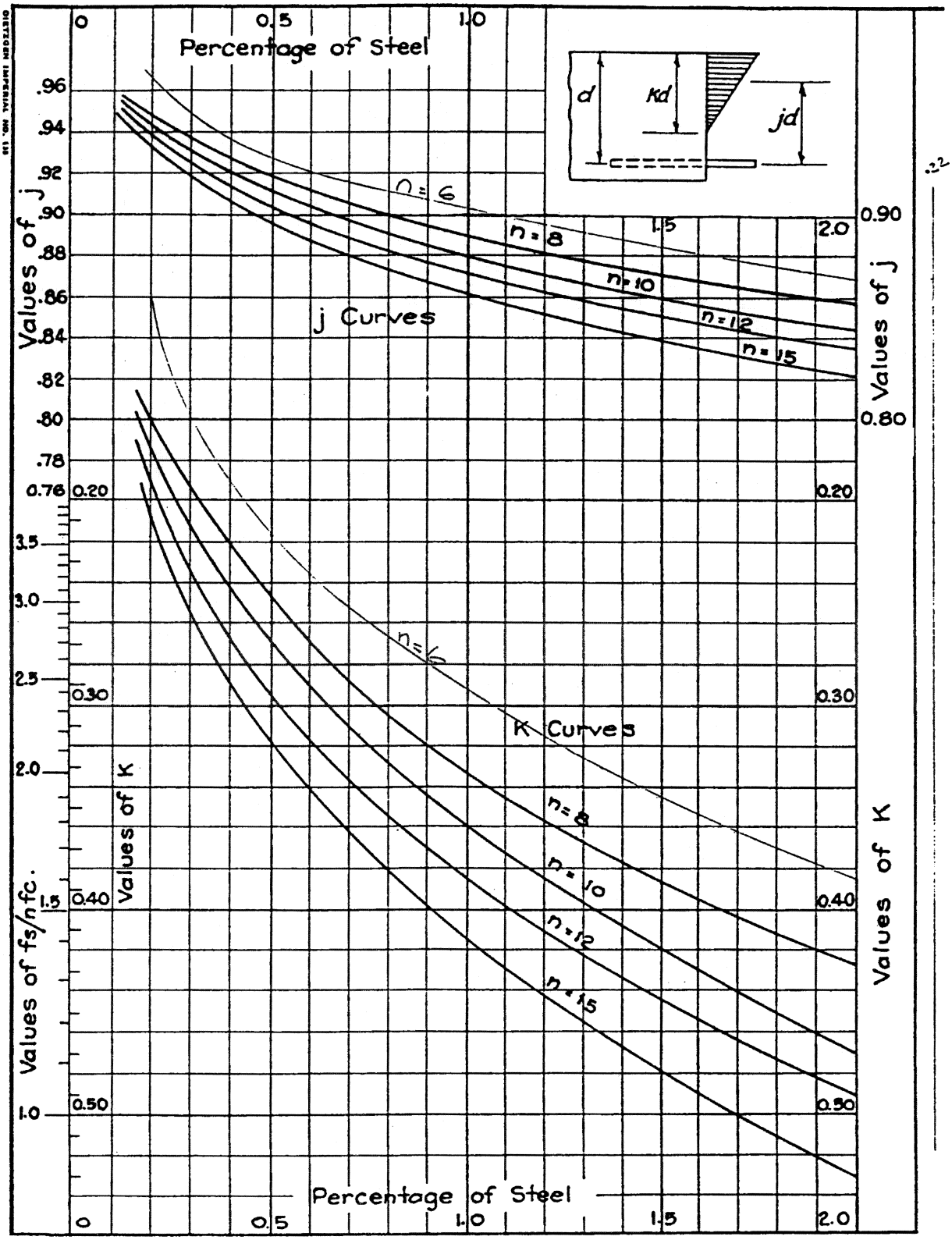
Percentage of Steel
0
0.5
1.0
1.5
2.0
d
kd
jd
n = 6
n = 8
n = 10
n = 12
n = 15
j Curves
Values of j
.96
.94
.92
.90
.88
.86
.84
.82
.80
.78
0.76
0.90
0.80
Values of j
K Curves
n = 6
n = 8
n = 10
n = 12
n = 15
Values of K
0.20
0.30
0.40
0.50
3.5
3.0
2.5
2.0
1.5
1.0
Values of fs/n fc.
Values of K
Percentage of Steel

COEFFICIENTS (K, k, j, p) FOR RECTANGULAR SECTIONS

f'_c and n	f_c	K	k	j	p	K	k	j	p
		$f_s = 16{,}000$		$a = 1.13$		$f_s = 18{,}000$		$a = 1.29$	
	875.	137.	.356	.881	.0097	128.	.329	.890	.0080
2500	1000.	169.	.387	.871	.0121	158.	.359	.880	.0100
	1125.	201.	.415	.862	.0146	190.	.387	.871	.0121
10.1	1250.	235.	.441	.853	.0172	222.	.412	.863	.0143
	1500.	306.	.486	.838	.0228	291.	.457	.848	.0190
	1050.	173.	.376	.875	.0124	162.	.349	.884	.0102
3000	1200.	212.	.408	.864	.0153	199.	.380	.873	.0127
	1350.	252.	.437	.854	.0184	238.	.408	.864	.0153
9.2	1500.	294.	.463	.846	.0217	278.	.434	.855	.0181
	1800.	380.	.509	.830	.0286	362.	.479	.840	.0240
	1400.	249.	.412	.863	.0180	234.	.384	.872	.0149
4000	1600.	303.	.444	.852	.0222	286.	.416	.861	.0185
	1800.	359.	.474	.842	.0266	341.	.444	.852	.0222
8.0	2000.	417.	.500	.833	.0313	397.	.471	.843	.0261
	2400.	536.	.545	.818	.0409	513.	.516	.828	.0344
	1750.	327.	.437	.854	.0239	309.	.408	.864	.0199
5000	2000.	397.	.470	.843	.0294	376.	.441	.853	.0245
	2250.	468.	.500	.833	.0351	446.	.470	.843	.0294
7.1	2500.	542.	.526	.825	.0411	518.	.497	.835	.0345
	3000.	694.	.571	.810	.0535	666.	.542	.819	.0452
		$f_s = 20{,}000$		$a = 1.44$		$f_s = 22{,}000$		$a = 1.60$	
	875.	120.	.306	.898	.0067	113.	.287	.904	.0057
2500	1000.	149.	.336	.888	.0084	141.	.315	.895	.0072
	1125.	179.	.362	.879	.0102	170.	.341	.886	.0087
10.1	1250.	211.	.387	.871	.0121	200.	.365	.878	.0104
	1500.	277.	.431	.856	.0162	264.	.408	.864	.0139
	1050.	152.	.326	.891	.0085	144.	.305	.898	.0073
3000	1200.	188.	.356	.881	.0107	178.	.334	.889	.0091
	1350.	226.	.383	.872	.0129	214.	.361	.880	.0111
9.2	1500.	265.	.408	.864	.0153	252.	.385	.872	.0131
	1800.	346.	.453	.849	.0204	331.	.429	.857	.0176
	1400.	221.	.359	.880	.0126	210.	.337	.888	.0107
4000	1600.	272.	.390	.870	.0156	258.	.368	.877	.0134
	1800.	324.	.419	.860	.0188	309.	.396	.868	.0162
8.0	2000.	379.	.444	.852	.0222	362.	.421	.860	.0191
	2400.	492.	.490	.837	.0294	472.	.466	.845	.0254
	1750.	292.	.383	.872	.0168	278.	.361	.880	.0144
5000	2000.	358.	.415	.862	.0208	341.	.392	.869	.0178
	2250.	426.	.444	.852	.0250	407.	.421	.860	.0215
7.1	2500.	496.	.470	.843	.0294	475.	.447	.851	.0254
	3000.	641.	.516	.828	.0387	617.	.492	.836	.0335
		$f_s = 27{,}000$		$a = 2.00$		$f_s = 30{,}000$		$a = 2.24$	
	875.	99.	.247	.918	.0040	92.	.228	.924	.0033
2500	1000.	124.	.272	.909	.0050	115.	.252	.916	.0042
	1125.	150.	.296	.901	.0062	140.	.275	.908	.0052
10.1	1250.	178.	.319	.894	.0074	167.	.296	.901	.0062
	1500.	237.	.359	.880	.0100	224.	.336	.888	.0084
	1050.	126.	.264	.912	.0051	117.	.244	.919	.0043
3000	1200.	157.	.290	.903	.0064	147.	.269	.910	.0054
	1350.	190.	.315	.895	.0079	178.	.293	.902	.0066
9.2	1500.	225.	.338	.887	.0094	211.	.315	.895	.0079
	1800.	299.	.380	.873	.0127	282.	.356	.881	.0107
	1400.	185.	.293	.902	.0076	173.	.272	.909	.0063
4000	1600.	230.	.322	.893	.0095	215.	.299	.900	.0080
	1800.	277.	.348	.884	.0116	260.	.324	.892	.0097
8.0	2000.	326.	.372	.876	.0138	308.	.348	.884	.0116
	2400.	430.	.416	.861	.0185	407.	.390	.870	.0156
	1750.	247.	.315	.895	.0102	231.	.293	.902	.0085
5000	2000.	305.	.345	.885	.0128	287.	.321	.893	.0107
	2250.	366.	.372	.876	.0155	346.	.347	.884	.0130
7.1	2500.	430.	.397	.868	.0184	407.	.372	.876	.0155
	3000.	564.	.441	.853	.0245	537.	.415	.862	.0208

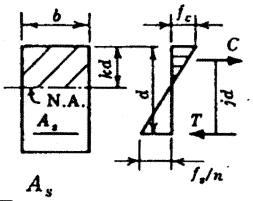

$$p = \frac{A_s}{bd}$$

$$k = \frac{1}{1 + f_s/nf_c} \qquad j = 1 - \tfrac{1}{3}k$$

$$p^* = \frac{f_c}{2f_s} \times k \qquad K = \frac{f_c}{2}kj$$

$$a = \frac{f_s}{12{,}000} \times \text{(av. } j\text{-value)}$$

for use in

$$A_s = \frac{M}{ad} \text{ or } A_s = \frac{NE}{adi}$$

K	k	j	p
$f_s = 24{,}000$		$a = 1.76$	
107.	.269	.910	.0049
133.	.296	.901	.0062
161.	.321	.893	.0075
191.	.345	.885	.0090
253.	.387	.871	.0121
136.	.287	.904	.0063
169.	.315	.895	.0079
204.	.341	.886	.0096
240.	.365	.878	.0114
317.	.408	.864	.0153
199.	.318	.894	.0093
246.	.348	.884	.0116
295.	.375	.875	.0141
347.	.400	.867	.0167
454.	.444	.852	.0222
265.	.341	.886	.0124
326.	.372	.876	.0155
390.	.400	.867	.0187
456.	.425	.858	.0221
595.	.470	.843	.0294
$f_s = 33{,}000$		$a = 2.48$	
86.	.211	.930	.0028
108.	.234	.922	.0036
132.	.256	.915	.0044
157.	.277	.908	.0052
211.	.315	.895	.0072
110.	.226	.925	.0036
138.	.251	.916	.0046
168.	.273	.909	.0056
199.	.295	.902	.0067
267.	.334	.889	.0091
162.	.253	.916	.0054
203.	.279	.907	.0068
246.	.304	.899	.0083
291.	.327	.891	.0099
387.	.368	.877	.0134
218.	.274	.909	.0073
271.	.301	.900	.0091
327.	.326	.891	.0111
386.	.350	.883	.0132
511.	.392	.869	.0178

*"Balanced steel ratio" applies to problems involving bending only.

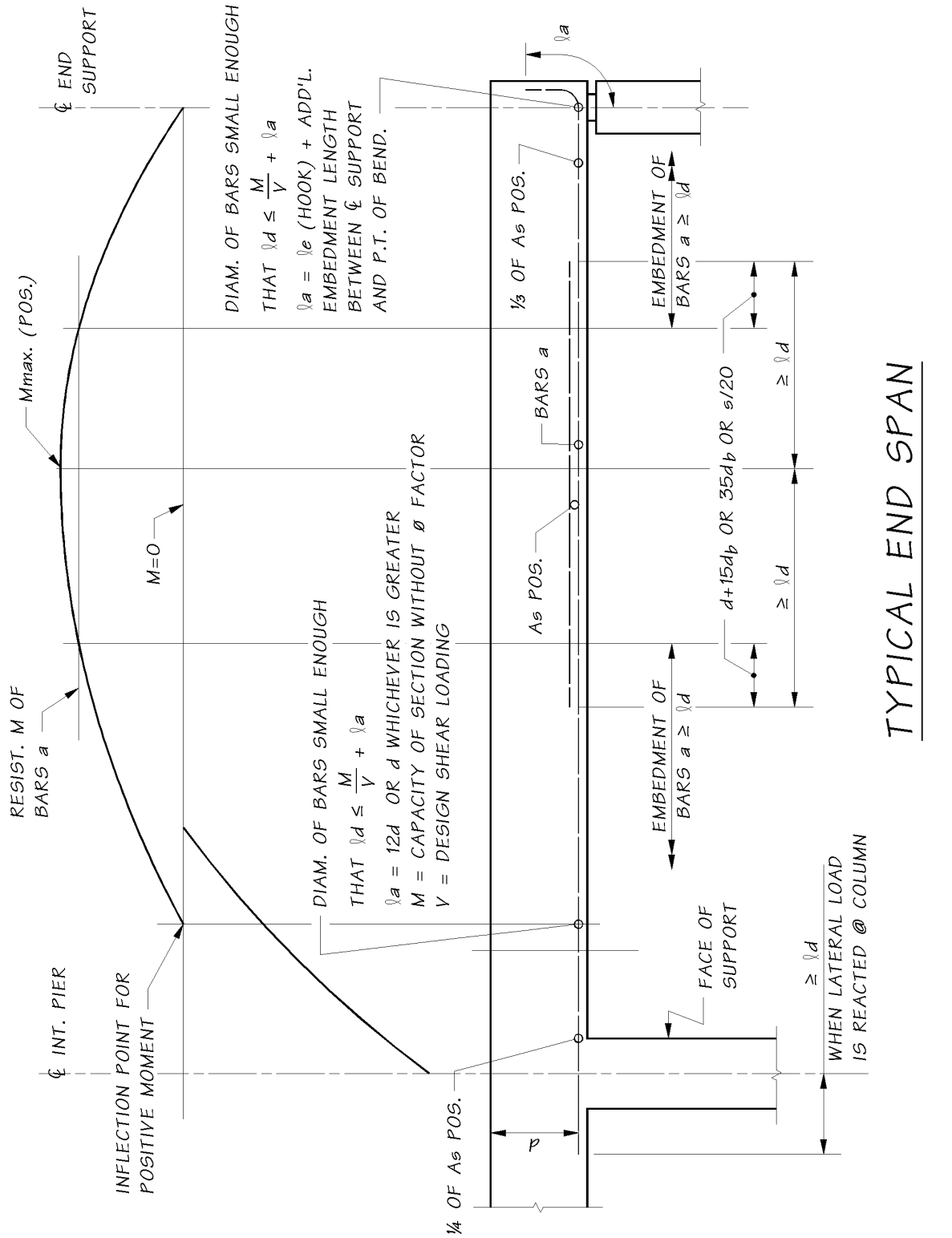
℄ END SUPPORT
Mmax. (POS.)
M=0
RESIST. M OF BARS a
℄ INT. PIER
INFLECTION POINT FOR POSITIVE MOMENT
DIAM. OF BARS SMALL ENOUGH
THAT ℓd ≤ M/V + ℓa
ℓa = ℓe (HOOK) + ADD'L. EMBEDMENT LENGTH BETWEEN ℄ SUPPORT AND P.T. OF BEND.
DIAM. OF BARS SMALL ENOUGH
THAT ℓd ≤ M/V + ℓa
ℓa = 12d OR d WHICHEVER IS GREATER
M = CAPACITY OF SECTION WITHOUT ø FACTOR
V = DESIGN SHEAR LOADING
¼ OF As POS.
p
⅓ OF As POS.
As POS.
BARS a
ℓa
EMBEDMENT OF BARS a ≥ ℓd
EMBEDMENT OF BARS a ≥ ℓd
d+15db OR 35db OR s/20
≥ ℓd
≥ ℓd
FACE OF SUPPORT
≥ ℓd
WHEN LATERAL LOAD IS REACTED @ COLUMN
TYPICAL END SPAN

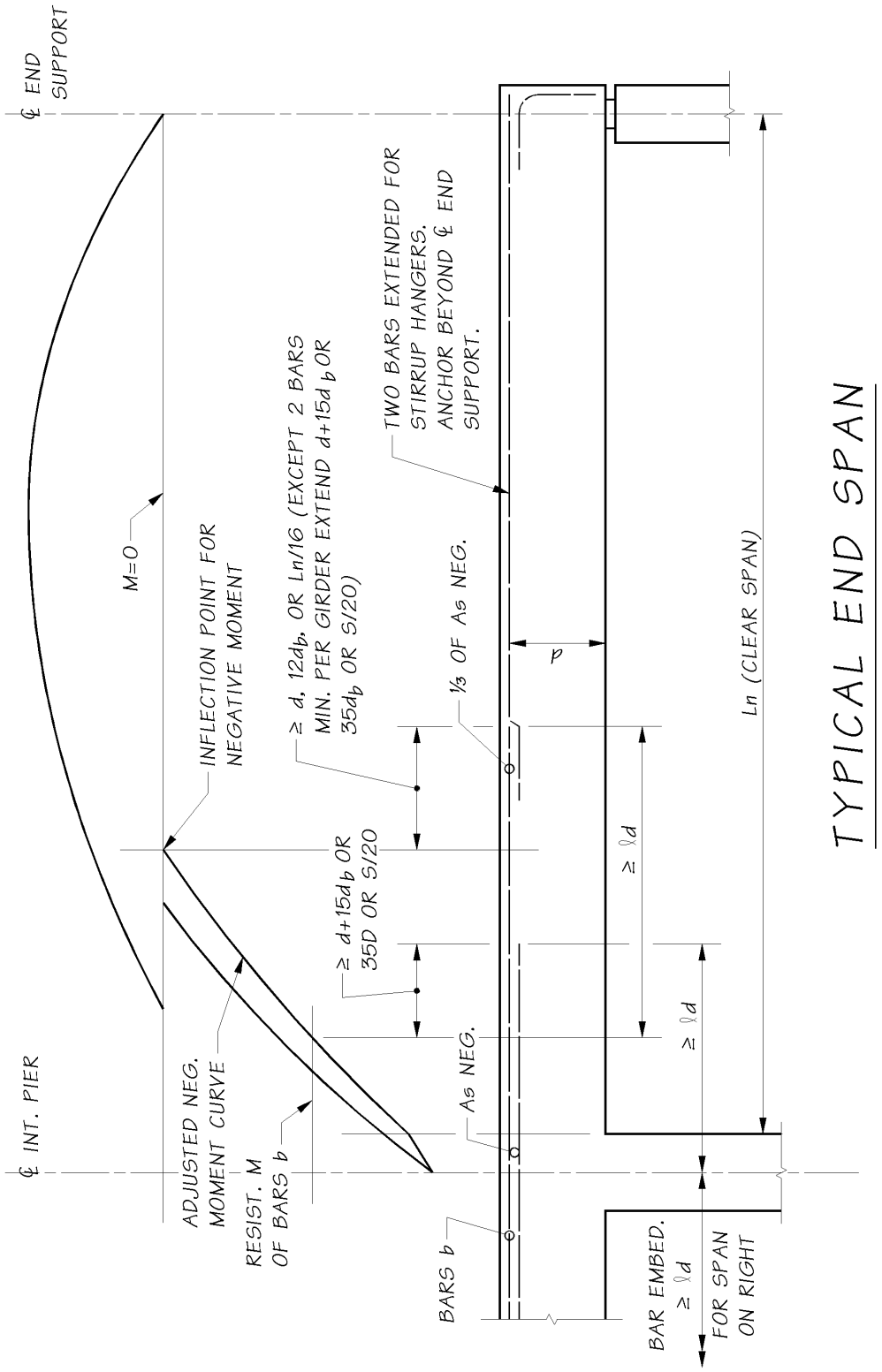
℄ END SUPPORT
M=0
INFLECTION POINT FOR NEGATIVE MOMENT
≥ d, 12d_b, OR Ln/16 (EXCEPT 2 BARS MIN. PER GIRDER EXTEND d+15d_b OR 35d_b OR S/20)
TWO BARS EXTENDED FOR STIRRUP HANGERS. ANCHOR BEYOND ℄ END SUPPORT.
⅓ OF As NEG.
p
Ln (CLEAR SPAN)
≥ d+15d_b OR 35D OR S/20
≥ ℓd
≥ ℓd
℄ INT. PIER
ADJUSTED NEG. MOMENT CURVE
RESIST. M OF BARS b
As NEG.
BARS b
BAR EMBED. ≥ ℓd
FOR SPAN ON RIGHT
TYPICAL END SPAN

Adjusted Negative Moment Case I (Design for M @ Face of Support)

CASE I (DESIGN FOR M AT FACE OF EFFECTIVE SUPPORT) APPLIES TO GIRDERS, BEAMS OR X-BEAMS WHERE THE SUPPORT INCREASES THE DEPTH OF THE BEAM EXCEPT FOR CASES WHERE:

1. THE INCREASE IN DEPTH DUE TO THE SUPPORT IS INSUFICIENT TO RESIST THE MOMENT AT ℄ SUPPORT; THAT IS
   $d℄ < dface \frac{M\ ¼\ PT.}{Mface}$
2. CONTINUOUS BEAMS WHERE ONE-HALF THE LENGTH OF SUPPORT DIVIDED BY THE SPAN IS GREATER THAN 0.1:($\frac{W/2}{SPAN} > 0.1$)

WHERE CASE 1. OR 2. APPLIES USE CASE II.

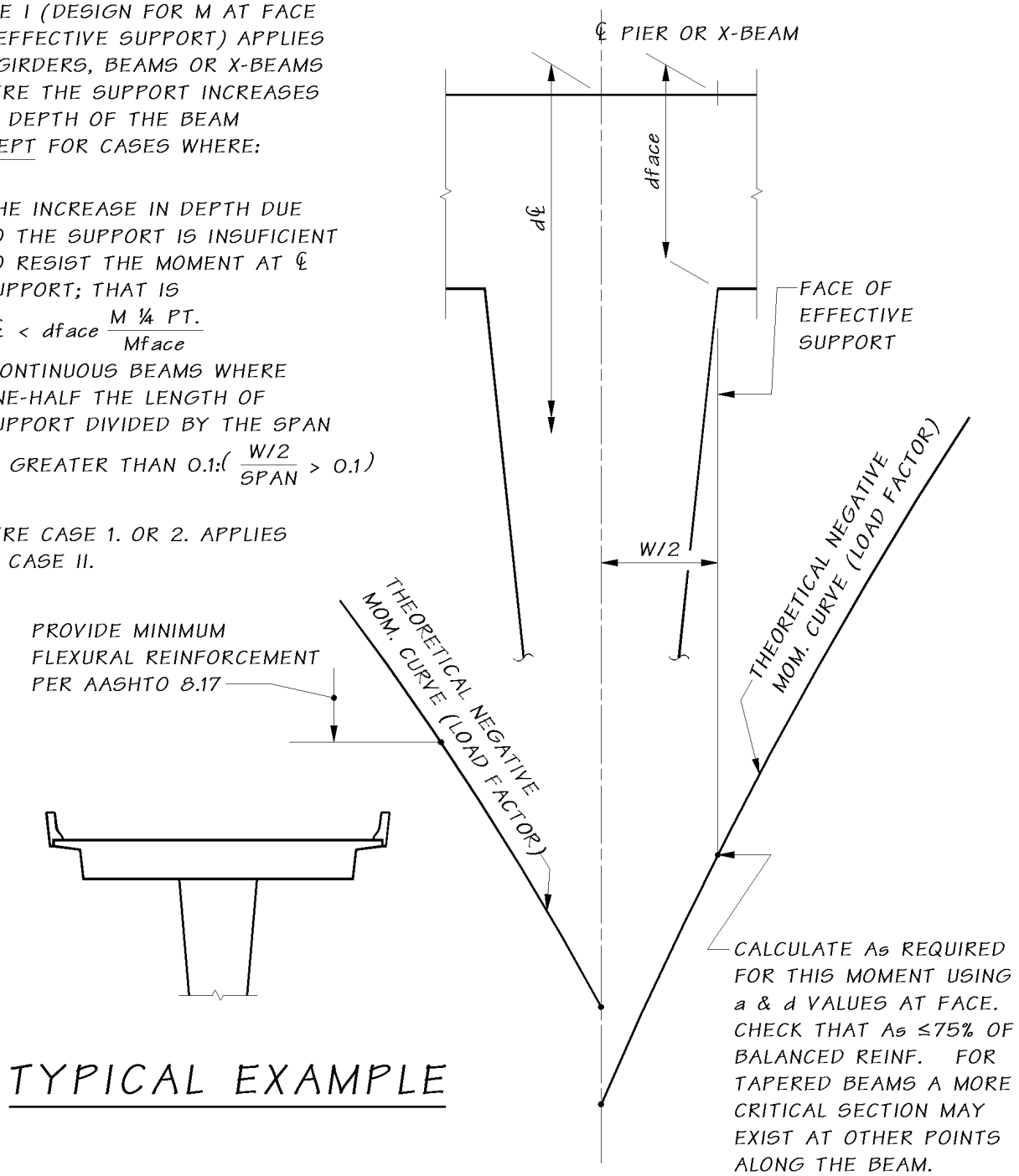

TYPICAL EXAMPLE

CASE II (DESIGN FOR M ½ POINT OF SUPPORT) APPLIES TO GIRDERS, BEAMS, OR X-BEAMS WHERE ONE OF THE FOLLOWING SUPPORT CONDITIONS EXIST:

1. NO INCREASE IN BEAM DEPTH CAN BE ATTRIBUTED TO THE SUPPORT.
2. THE INCREASE IN DEPTH DUE TO THE SUPPORT IS INSUFICIENT TO RESIST THE MOMENT AT ℄ SUPPORT; THAT IS

   $d℄ \leq dface \frac{M\ ¼\ PT.}{Mface}$
3. CONTINUOUS BEAMS WHERE ONE-HALF THE LENGTH OF SUPPORT DIVIDED BY THE SPAN IS GREATER THAN 0.1: $\left(\frac{W/2}{SPAN} > 0.1 \right)$

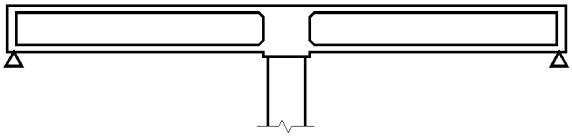

TYPICAL SECTION

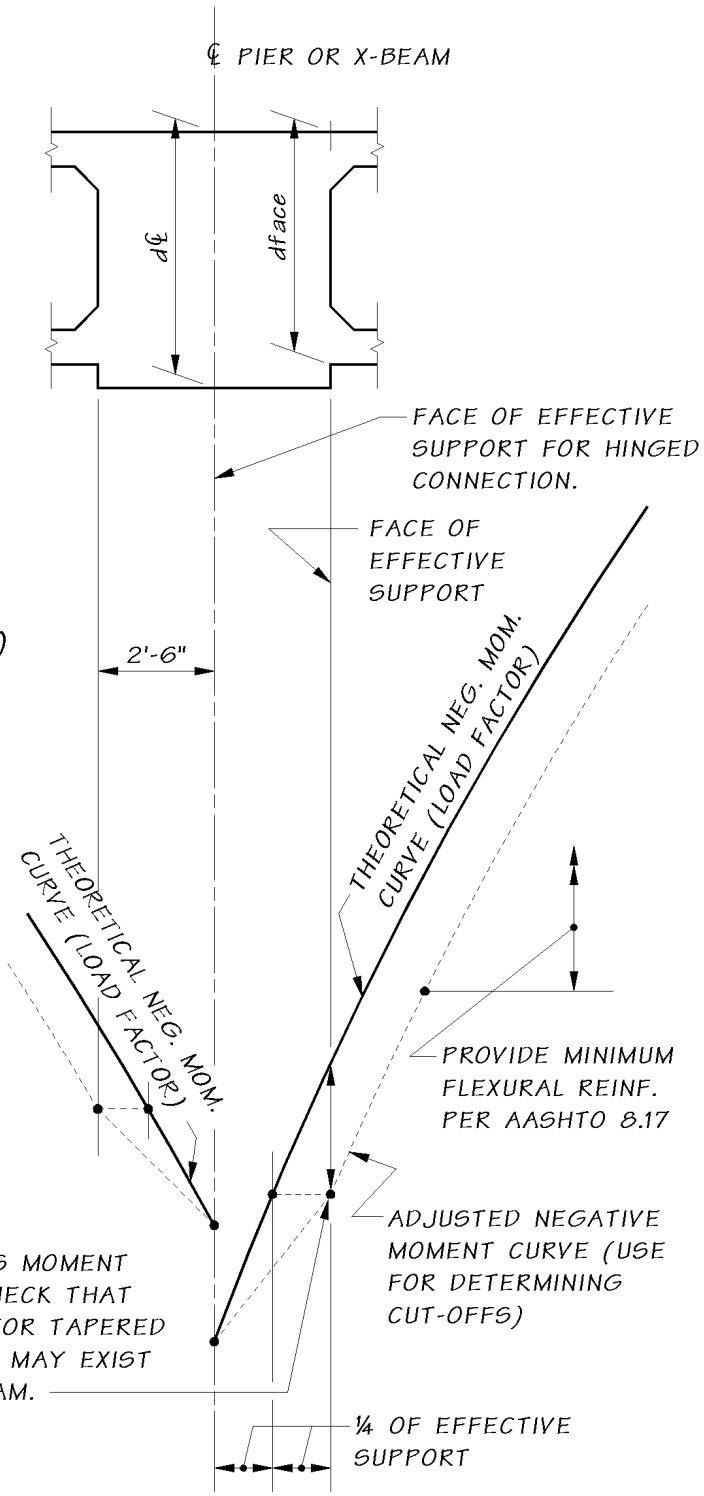

CALCULATE As REQUIRED FOR THIS MOMENT USING a & d VALUES AT FACE. CHECK THAT As ≤ 75% OF BALANCED REINF. FOR TAPERED BEAMS A MORE CRITICAL SECTION MAY EXIST AT OTHER POINTS ALONG THE BEAM.

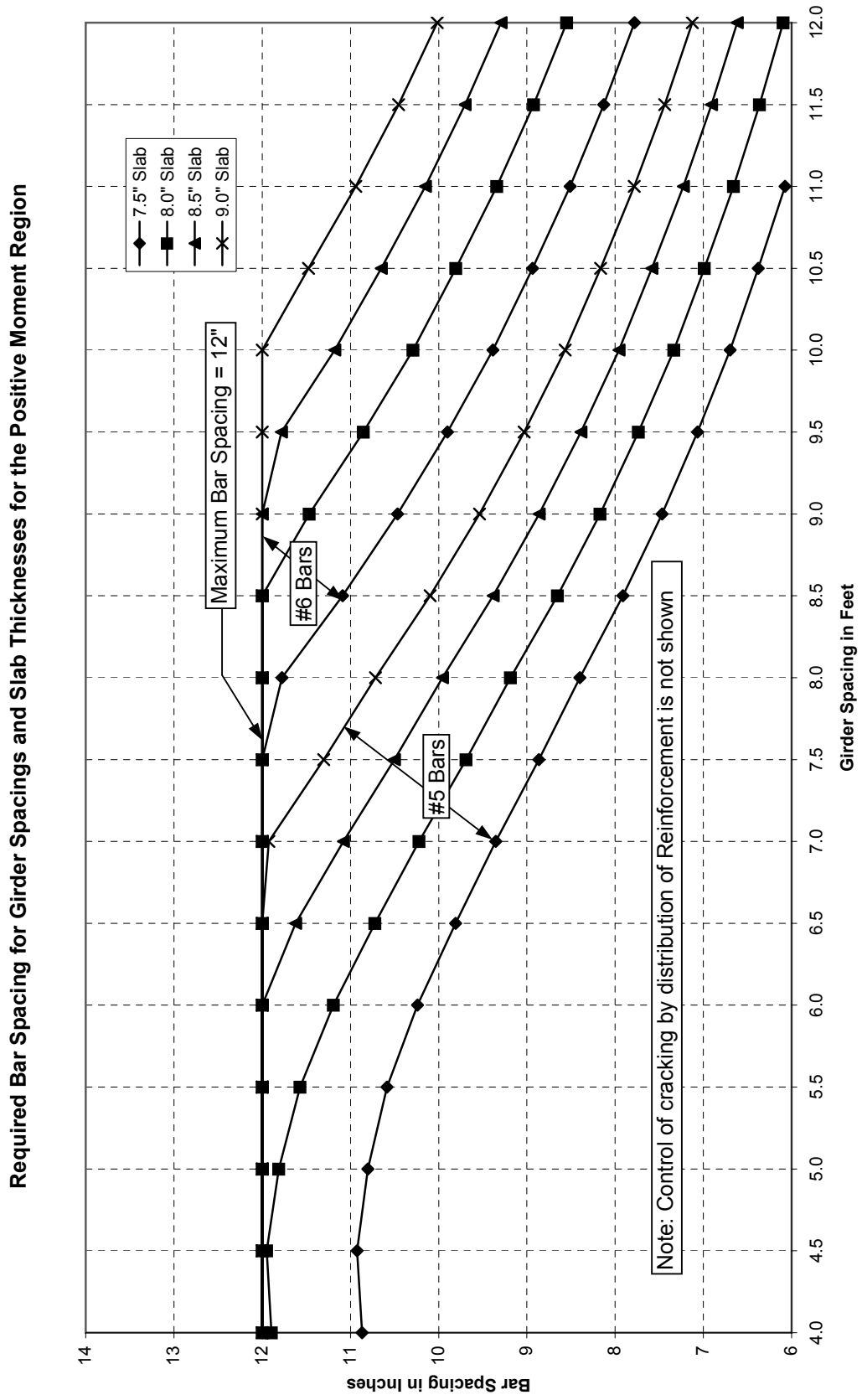
Required Bar Spacing for Girder Spacings and Slab Thicknesses for the Positive Moment Region
7.5" Slab
8.0" Slab
8.5" Slab
9.0" Slab
Maximum Bar Spacing = 12"
#6 Bars
#5 Bars
Note: Control of cracking by distribution of Reinforcement is not shown
Bar Spacing in Inches
Girder Spacing in Feet
14
13
12
11
10
9
8
7
6
4.0
4.5
5.0
5.5
6.0
6.5
7.0
7.5
8.0
8.5
9.0
9.5
10.0
10.5
11.0
11.5
12.0

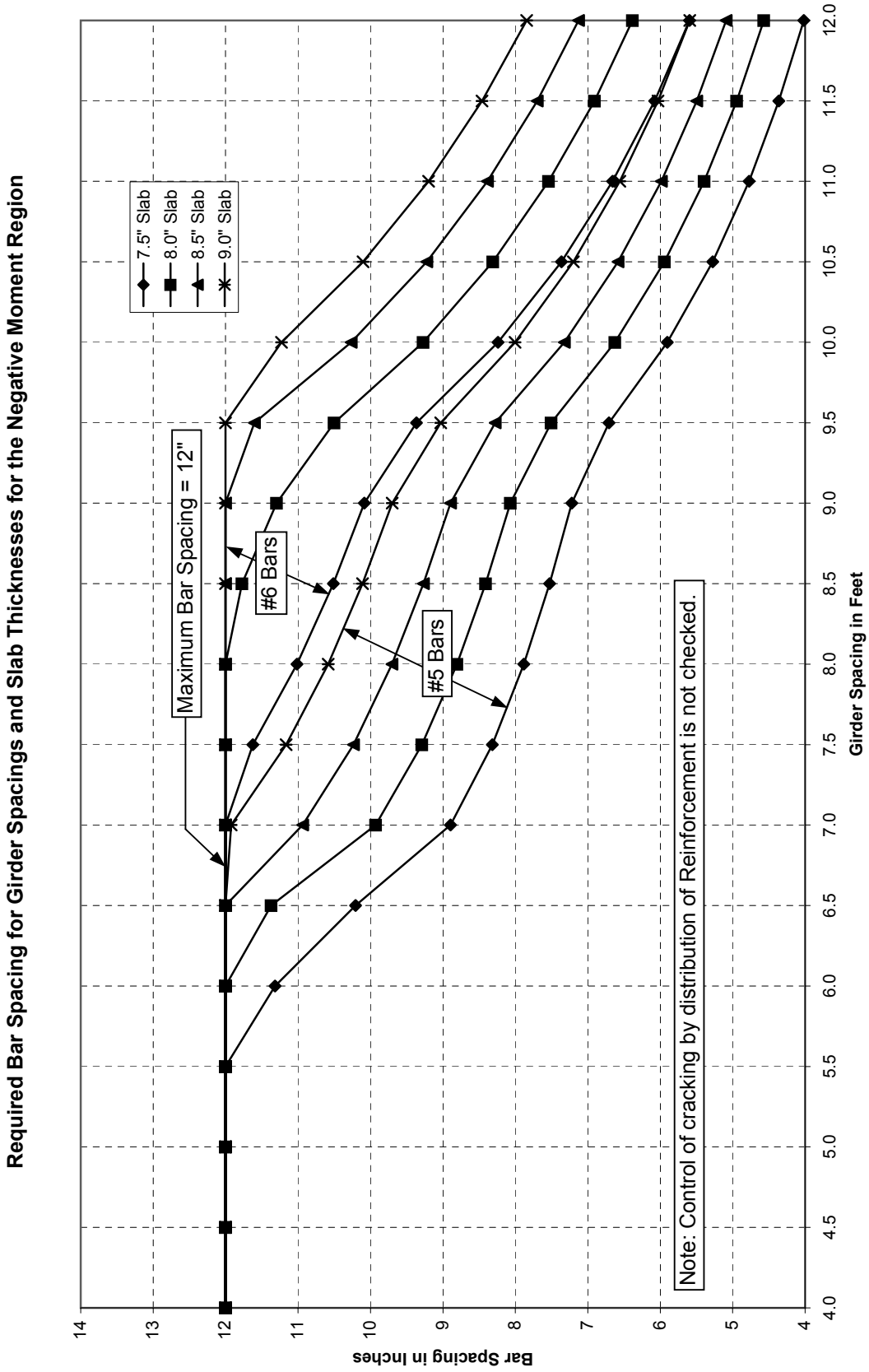
Required Bar Spacing for Girder Spacings and Slab Thicknesses for the Negative Moment Region
7.5" Slab
8.0" Slab
8.5" Slab
9.0" Slab
Maximum Bar Spacing = 12"
#6 Bars
#5 Bars
Note: Control of cracking by distribution of Reinforcement is not checked.
Bar Spacing in Inches
Girder Spacing in Feet
14
13
12
11
10
9
8
7
6
5
4
4.0
4.5
5.0
5.5
6.0
6.5
7.0
7.5
8.0
8.5
9.0
9.5
10.0
10.5
11.0
11.5
12.0

Slab Overhang Required Reinforcement for Vehicle Impact - Interior Barrier Segment - LRFD A13.4.1 Design Case 1

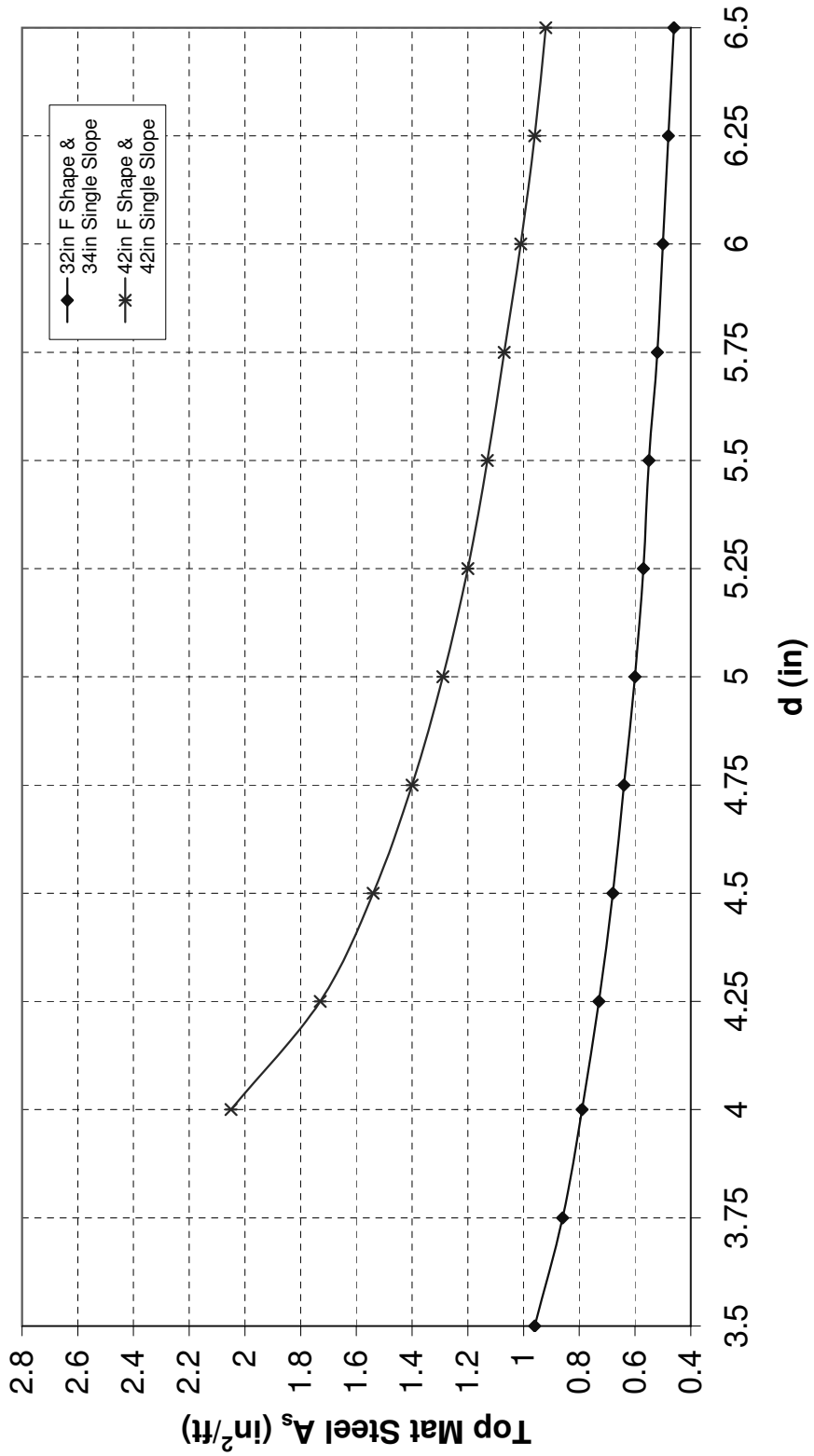

Notes:

1. Top and bottom mats each carry one-half the tension impact load.
2. Only Design Case 1 of LRFD A13.4.1 is considered. Designer must also check Design Cases 2 and 3.
3. Section considered is a vertical section through the slab overhang at the toe of the barrier.

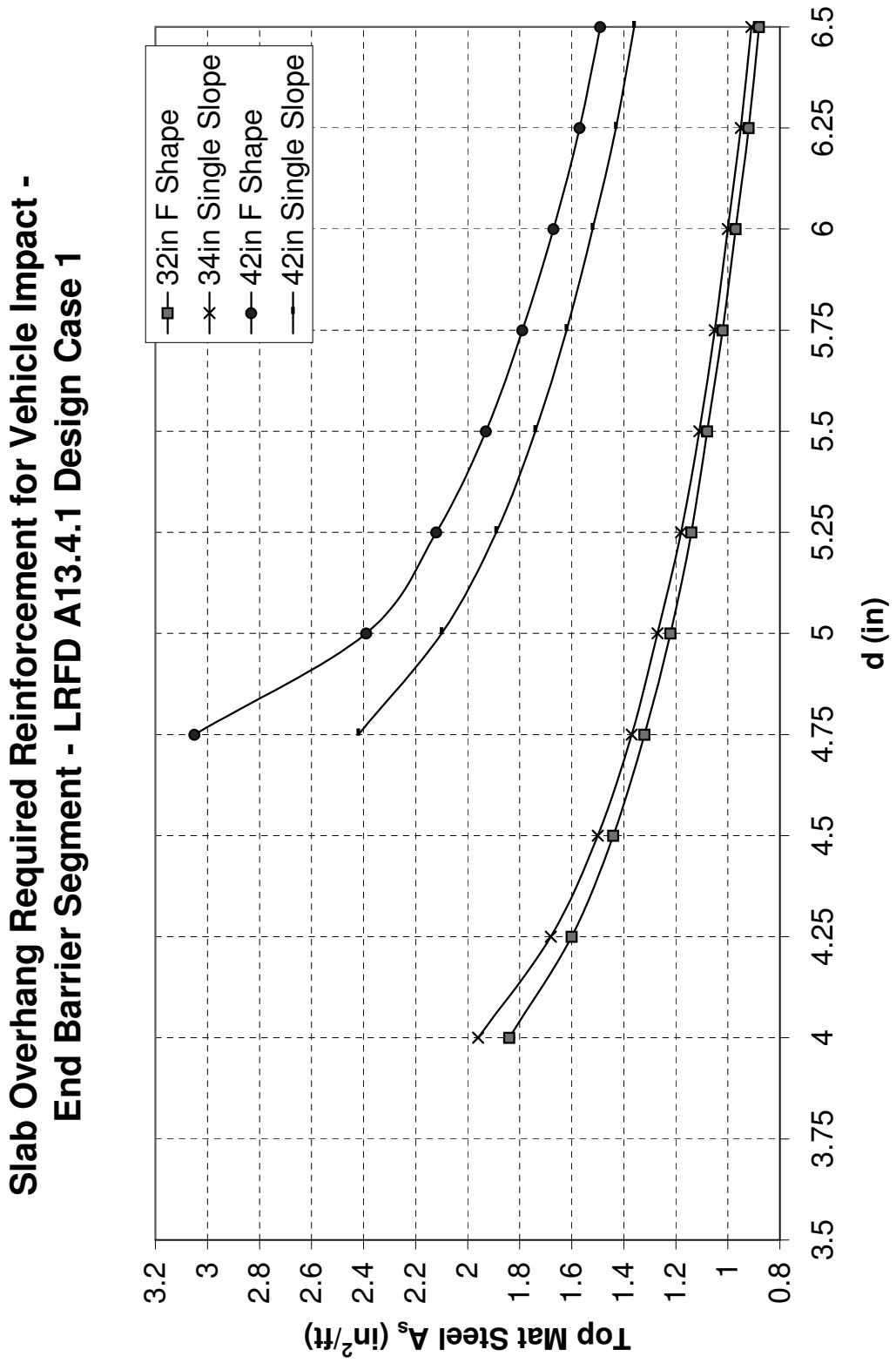

Notes:

1. Top and bottom mats each carry one-half the tension impact load.
2. Only Design Case 1 of LRFD A13.4.1 is considered. Designer must also check Design Cases 2 and 3.
3. Section considered is a vertical section through the slab overhang at the toe of the barrier.

Appendix 5.6-A1-1A

Span Capability of Prestressed W Girders with Future Wearing Surface

f'ci = 7.5 ksi, f'c = 8.5 ksi Strand diameter = 0.6" Grade 270 ksi low relaxation								
Girder Type	Girder Spacing (ft)	Span Length (ft)	Straight Strands	Harped Strands	Harped Strand Location*	Top Temp. Strands	"A" Dim. (in)	Deck Thickness (in)
W42G	5	85	14	7	6	-	10.50	7.50
	6	80	14	7	7	-	10.25	7.50
	7	75	14	7	9	-	10.00	7.50
	8	65	12	6	9	-	9.75	7.50
	9	55	10	4	9	-	9.50	7.50
	10	45	8	3	8	-	9.50	7.75
	11	45	8	4	8	-	10.00	8.25
	12	40	8	3	9	-	10.00	8.50
W50G	5	115	24	8	3	-	11.00	7.50
	6	110	24	8	3	-	11.00	7.50
	7	105	24	8	3	-	11.00	7.50
	8	95	22	7	3	-	11.00	7.50
	9	90	24	5	5	-	11.00	7.50
	10	85	20	8	6	-	11.00	7.75
	11	80	20	8	8	-	11.00	8.00
	12	75	20	7	9	-	11.00	8.50
W58G	5	130	26	11	3	4	10.50	7.50
	6	120	26	9	3	2	11.00	7.50
	7	115	26	8	3	2	10.75	7.50
	8	110	26	8	3	2	10.75	7.50
	9	105	26	8	3	2	10.75	7.50
	10	100	26	8	3	2	10.75	7.50
	11	95	26	7	3	2	11.00	8.00
	12	90	26	6	3	2	11.25	8.50
W74G	5	145	26	12	3	6	9.75	7.50
	6	140	26	13	3.23	6	10.00	7.50
	7	135	26	13	3.23	6	9.75	7.50
	8	130	26	13	3.23	6	10.00	7.50
	9	125	26	13	3.23	6	10.00	7.50
	10	120	26	13	3.23	6	10.00	7.50
	11	115	26	13	3.23	6	10.25	7.75
	12	110	26	12	3	4	10.75	8.00

* Vertical location at harping point

Design Parameters:

~PGSuper Ver. 1.12.0
~Simple girder span lengths are CL bearing to CL bearing
~Spans reported in 5 ft. increments
~Slab f'c = 4.0 ksi
~Under normal exposure condition and 75% relative humidity
~No vertical or horizontal curve
~2% roadway crown slope
~Standard WSDOT "F" shape barrier
~6% roadway superelevation for shipping check
~2" future HMA overlay with density of 140 pcf

Appendix 5.6-A1-1B Span Capability of W Girders without Future Wearing Surface

f'ci = 7.5 ksi, f'c = 8.5 ksi Strand diameter = 0.6" Grade 270 ksi low relaxation								
Girder Type	Girder Spacing (ft)	Span Length (ft)	Straight Strands	Harped Strands	Harped Strand Location*	Top Temp. Strands	"A" Dim. (in)	Deck Thickness (in)
W42G	5	85	14	6	6	-	10.50	7.50
	6	80	14	6	8	-	10.50	7.50
	7	75	14	6	9	-	10.00	7.50
	8	65	12	4	9	-	10.00	7.50
	9	55	10	3	9	-	10.00	7.50
	10	50	8	4	9	-	10.00	7.75
	11	50	8	5	9	-	10.00	8.25
	12	45	8	3	9	-	10.25	8.50
W50G	5	115	24	7	3	-	11.00	7.50
	6	110	24	7	3	-	11.00	7.50
	7	105	24	7	5	-	11.00	7.50
	8	100	22	9	6	-	11.00	7.50
	9	95	22	9	7	-	11.00	7.50
	10	90	22	8	8	-	11.00	7.75
	11	85	20	10	9	-	11.00	8.00
	12	80	18	10	9	-	11.00	8.50
W58G	5	130	26	8	3	2	11.00	7.50
	6	125	26	8	3	2	11.00	7.50
	7	120	26	9	3	2	11.00	7.50
	8	115	26	8	3	2	11.00	7.50
	9	110	26	8	3	2	11.00	7.50
	10	105	26	7	3	2	11.00	7.50
	11	100	26	7	3	4	11.25	8.00
	12	95	26	6	3	4	11.50	8.50
W74G	5	150	26	13	3.23	6	10.00	7.50
	6	145	26	13	3.23	6	9.75	7.50
	7	140	26	13	3.23	6	9.75	7.50
	8	130	26	12	3	6	10.00	7.50
	9	125	26	11	3	6	10.00	7.50
	10	125	26	13	3.23	6	9.75	7.50
	11	120	26	13	3.23	6	10.00	7.75
	12	115	26	12	3	6	10.25	8.00

* Vertical location at harping point

Design Parameters:

~PGSuper Ver. 1.11.1
~Simple girder span lengths are CL bearing to CL bearing
~Spans reported in 5 ft. increments
~Slab f'c = 4.0 ksi
~Under normal exposure condition and 75% relative humidity
~No vertical or horizontal curve
~2% roadway crown slope
~Standard WSDOT "F" shape barrier
~6% roadway superelevation for shipping check

Appendix 5.6-A1-2A

Span Capability of Prestressed Wide Flange Girders with Future Wearing Surface

f'ci = 7.5 ksi, f'c = 8.5 ksi Strand diameter = 0.6" Grade 270 ksi low relaxation							
Girder Type	Girder Spacing (ft)	Span Length (ft)	Straight Strands	Harped Strands	Top Temp. Strands	"A" Dim. (in)	Deck Thickness (in)
WF42G	5	115	30	13	0	11.00	7.5
	6	110	30	13	0	11.00	7.5
	7	110	32	15	2	10.75	7.5
	8	105	32	15	4	10.50	7.5
	9	100	32	13	4	10.25	7.5
	10	95	32	12	2	10.75	7.5
	11	90	32	11	2	10.75	7.5
	12	85	32	9	2	11.00	8.0
WF50G	5	135	36	14	0	11.00	7.5
	6	130	34	17	0	11.25	7.5
	7	125	34	17	0	11.25	7.5
	8	120	34	17	2	10.75	7.5
	9	115	34	16	2	10.75	7.5
	10	110	34	14	2	10.75	7.5
	11	105	34	13	2	10.75	7.5
	12	100	34	12	0	11.50	8.0
WF58G	5	150	36	18	0	11.00	7.5
	6	145	36	18	0	11.00	7.5
	7	140	36	18	0	11.00	7.5
	8	130	36	15	0	11.25	7.5
	9	130	36	18	2	10.75	7.5
	10	125	36	18	4	10.50	7.5
	11	115	36	13	0	11.25	7.5
	12	115	36	16	4	10.75	8.0
WF74G	5	170	40	14	2	10.00	7.5
	6	165	40	15	2	10.25	7.5
	7	160	40	16	2	10.50	7.5
	8	155	40	17	2	10.50	7.5
	9	150	40	17	4	10.25	7.5
	10	145	40	17	2	10.75	7.5
	11	140	40	17	2	10.75	7.5
	12	135	40	17	4	10.75	8.0
WF83G	5	180	40	16	6	9.50	7.5
	6	175	42	14	6	9.50	7.5
	7	170	42	16	6	9.50	7.5
	8	165	42	17	6	9.75	7.5
	9	155	42	14	4	10.25	7.5
	10	150	42	14	4	10.25	7.5
	11	145	44	12	6	10.00	7.5
	12	140	44	12	6	10.50	8.0
WF95G	5	180#	34	16	6	9.50	7.5
	6	175#	38	13	6	9.50	7.5
	7	175#	40	15	6	9.50	7.5
	8	170#	44	11	6	9.50	7.5
	9	165	46	11	6	10.00	7.5
	10	160	46	11	6	10.00	7.5
	11	155	46	11	6	10.25	7.5
	12	150	46	11	6	10.50	8.0

Span capability exceeds shipping weight of 190 kips

Design Parameters:

- PGSuper Ver. 1.12.0
- Simple girder span lengths are CL bearing to CL bearing
- Spans reported in 5 ft. increments
- Slab f'c = 4.0 ksi
- Under normal exposure condition and 75% relative humidity
- No vertical or horizontal curve
- 2% roadway crown slope
- Standard WSDOT "F" shape barrier
- 6% roadway superelevation for shipping check
- 2" future HMA overlay with density of 140 pcf

Appendix 5.6-A1-2B

Span Capability of Prestressed Wide Flange Girders without Future Wearing Surface

f'ci = 7.5 ksi, f'c = 8.5 ksi Strand diameter = 0.6" Grade 270 ksi low relaxation							
Girder Type	Girder Spacing (ft)	Span Length (ft)	Straight Strands	Harped Strands	Top Temp. Strands	"A" Dim. (in)	Deck Thickness (in)
WF42G	5	120	32	13	0	11.00	7.5
	6	115	32	13	0	11.00	7.5
	7	110	32	12	0	11.00	7.5
	8	105	32	12	0	11.25	7.5
	9	100	32	10	0	11.00	7.5
	10	95	32	9	0	11.00	7.5
	11	90	32	7	0	11.00	7.5
	12	85	32	5	0	11.25	8.0
WF50G	5	135	34	13	0	11.00	7.5
	6	130	36	12	0	11.00	7.5
	7	125	36	12	0	11.25	7.5
	8	120	36	12	0	11.25	7.5
	9	115	36	11	0	11.25	7.5
	10	110	36	9	0	11.25	7.5
	11	105	36	8	0	11.25	7.5
	12	100	36	7	0	11.50	8.0
WF58G	5	150	38	13	0	11.00	7.5
	6	145	38	13	0	11.00	7.5
	7	140	38	13	0	11.00	7.5
	8	135	38	13	0	11.00	7.5
	9	130	38	13	0	11.25	7.5
	10	125	38	12	0	11.25	7.5
	11	120	38	11	0	11.25	7.5
	12	115	38	10	0	11.50	8.0
WF74G	5	170	40	11	6	10.00	7.5
	6	165	40	11	4	10.00	7.5
	7	165	42	14	6	10.50	7.5
	8	160	42	14	4	10.50	7.5
	9	155	42	15	6	11.00	7.5
	10	150	42	14	6	10.75	7.5
	11	145	42	14	4	10.75	7.5
	12	140	42	14	4	11.25	8.0
WF83G	5	180	36	15	6	10.00	7.5
	6	175	40	12	6	10.00	7.5
	7	170	42	11	6	10.00	7.5
	8	165	44	10	6	10.50	7.5
	9	160	42	12	6	10.50	7.5
	10	155	44	10	6	10.50	7.5
	11	150	44	10	6	11.00	7.5
	12	145	44	10	6	11.00	8.0
WF95G	5	180#	30	16	6	10.00	7.5
	6	175#	36	10	6	10.00	7.5
	7	175#	38	12	6	10.00	7.5
	8	170#	38	12	6	10.00	7.5
	9	160	38	9	6	10.00	7.5
	10	155	38	9	6	10.00	7.5
	11	155	42	8	6	10.50	7.5
	12	150	36	14	6	10.50	8.0

Span capability exceeds shipping weight of 190 kips

Design Parameters:

- PGSuper Ver. 1.11.1
- Simple girder span lengths are CL bearing to CL bearing
- Spans reported in 5 ft. increments
- Slab f'c = 4.0 ksi
- Under normal exposure condition and 75% relative humidity
- No vertical or horizontal curve
- 2% roadway crown slope
- Standard WSDOT "F" shape barrier
- 6% roadway superelevation for shipping check

Span Capability of Thin Flange Bulb Tee Girders

f'ci = 7.5 ksi, f'c = 8.5 ksi Strand diameter = 0.6" Grade 270 ksi low relaxation									
Girder Type	Girder Spacing (ft)	Span Length (ft)	Straight Strands	Harped Strands	Harped Strand Offset*	Top Temp. Strands	Excess Camber (in)	"A" Dim (in)	Deck thickness (in)
W32BTG	5	75	20	5	0	6	2.895	11.75	7.50
	6	75	18	10	3	6	2.924	11.75	7.50
	7	70	18	8	0	6	2.839	11.75	7.50
	8	65	18	6	0	6	2.380	11.25	7.50
	9	65	18	8	2	6	2.427	11.25	7.50
	10	60	16	8	0	6	2.123	11.00	7.50
	11	60	18	7	0	6	2.240	11.00	7.50
	12	55	16	7	0	6	1.763	11.25	8.00
W38BTG	5	90	22	8	2	6	3.308	12.25	7.50
	6	85	22	7	0	6	3.245	12.00	7.50
	7	80	22	6	0	6	2.956	11.75	7.50
	8	75	20	7	2	6	2.537	11.50	7.50
	9	75	20	8	0	6	2.742	11.50	7.50
	10	70	18	9	1	6	2.372	11.25	7.50
	11	65	20	5	1	6	2.029	11.00	7.50
	12	65	20	6	0	6	2.087	11.50	8.00
W62BTG	5	130	26	12	0	6	3.415	12.25	7.50
	6	125	26	13	0	6	3.536	12.50	7.50
	7	120	26	12	0	6	3.364	12.25	7.50
	8	115	26	12	0	6	3.354	12.25	7.50
	9	110	26	11	0	6	3.161	12.00	7.50
	10	105	26	10	0	6	2.967	11.75	7.50
	11	100	26	9	0	6	2.763	11.75	7.50
	12	95	26	8	0	6	2.513	12.00	8.00

* Offset at harping point

Design Parameters:

- PGSuper V.1.4
- WSDOT BDM LRFD design criteria
- Slab f'c = 4.0 ksi
- No vertical or horizontal curve
- 2.0% roadway crown slope
- Interior Girder w/barrier load (6 girder bridge)
- Standard WSDOT "F" shape barrier
- Simple girder span lengths are CL bearing to CL bearing
- Under normal exposure condition and 75% relative humidity
- Spans reported in 5 ft. increments
- Only flexural service and strength checked; Lifting and hauling checks not necessarily satisfied
- Slab F'c = 4.0 ksi
- Under normal exposure condition and 75% relative humidity
- No vertical or horizontal curve
- Span reported in 5 ft. increments
- 2.0% roadway crown slop
- Only flexural service and strength checked; Lifting and hauling checks not necessarily satisfied

f'ci = 7.5 ksi, f'c = 8.5 ksi Strand diameter = 0.6" Grade 270 ksi low relaxation									
Girder Type	Girder Spacing (ft)	Span Length (ft)	Straight Strands	Harped Strands	Harped Strand Offset*	Top Temp. Strands	Excess Camber (in)	"A" Dim. (in)	Deck Thickness (in)
U54G4	8	130	32	26	4	0	0.083	9.00	7.5
	10	125	32	28	0	0	0.164	9.00	7.5
	12	120	32	30	2	0	0.691	9.25	7.5
	14	115	32	30	0	0	0.757	9.25	7.5
U54G5	9	130	46	18	0	0	0.284	9.00	7.5
	11	125	46	20	0	0	0.671	9.00	7.5
	13	120	46	20	0	0	0.874	9.25	7.5
	15	115	46	20	0	0	1.082	9.50	7.5
U54G6	10	120	52	10	0	0	0.000	9.00	7.5
	12	115	52	10	0	0	0.268	9.00	7.5
	14	110	52	10	0	0	0.518	9.00	7.5
	16	105	52	10	0	0	0.740	9.25	7.5
U66G4	8	155#	32	38	8	0	0.581	9.00	7.5
	10	145	32	36	6	0	0.058	9.00	7.5
	12	140	32	38	4	0	0.326	9.00	7.5
	14	135	32	40	4	0	0.717	9.25	7.5
U66G5	9	150#	46	24	4	0	0.000	9.00	7.5
	11	145#	46	26	0	0	0.012	9.00	7.5
	13	140#	46	28	0	0	0.386	9.00	7.5
	15	135	46	28	0	0	0.608	9.25	7.5
U66G6	10	145#	52	24	8	0	0.000	9.00	7.5
	12	140#	52	22	4	0	0.000	9.00	7.5
	14	135#	52	24	4	0	0.000	9.00	7.5
	16	130#	52	24	0	0	0.036	9.00	7.5
U78G4	8	170#	32	42	8	0	0.000	9.00	7.5
	10	165#	32	46	8	0	0.000	9.00	7.5
	12	160#	32	48	8	0	0.150	9.00	7.5
	14	150#	32	44	4	0	0.354	9.00	7.5
	16	145#	32	48	4	0	0.715	9.50	8.0
U78G5	9	170#	46	34	8	0	0.000	9.00	7.5
	11	165#	46	36	4	0	0.000	9.00	7.5
	13	160#	46	38	4	0	0.037	9.00	7.5
	15	155#	46	40	4	0	0.439	9.00	7.5
	17	150#	46	42	6	0	0.699	9.50	8.0
U78G6	10	165#	52	32	8	0	0.000	9.00	7.5
	12	160#	52	34	8	0	0.000	9.00	7.5
	14	155#	52	34	4	0	0.000	9.00	7.5
	16	150#	52	34	4	0	0.000	9.00	7.5
	18	145#	52	36	4	0	0.000	9.00	8.0

Note: Adding bottom flange width does not necessarily increase the span capabilities

* Offset at girder end

Span capability exceeds maximum shipping weight of 200 kips

Design Parameters:

- PGSuper V. 1.4
- WSDOT BDM LRFD design criteria
- Slab f'c = 4.0 ksi
- No vertical or horizontal curve
- 2.0% roadway crown slope
- Interior Girder w/ barrier load (6 girder bridge)
- Standard WSDOT "F" shape barrier
- Simple girder span lengths are CL bearing to CL bearing
- Under normal exposure condition and 75% relative humidity
- Spans reported in 5 ft. increments
- Only flexural service and strength checked; Lifting and hauling checks not necessarily satisfied

Span Capability of Trapezoidal Tub Girders with Top Flange for S-I-P Deck Panels

f'ci = 7.5 ksi, f'c = 8.5 ksi Strand diameter = 0.6" Grade 270 ksi low relaxation									
Girder Type	Girder Spacing (ft)	Span Length (ft)	Straight Strands	Harped Strands	Harped Strand Offset*	Top Temp. Strands	Excess Camber (in)	"A" Dim. (in)	Deck Thickness (in)
UF60G4	9	150#	32	42	4	0	0.000	9.00	7.5
	11	145	32	46	6	0	1.086	9.75	7.5
	13	140	32	48	2	0	1.123	9.75	7.5
	15	130	32	42	0	0	1.174	9.75	7.5
UF60G5	10	150#	46	34	4	0	0.465	9.00	7.5
	12	145#	46	36	4	0	0.830	9.50	7.5
	14	140#	46	38	4	0	1.225	9.75	7.5
	16	135	46	38	4	0	1.419	10.00	7.5
UF60G6	15	135#	52	32	4	0	0.154	9.00	7.5
	17	130#	52	32	4	0	0.453	9.00	7.5
UF72G4	9	165#	32	46	0	0	0.000	9.00	7.5
	11	160#	32	48	0	0	0.000	9.00	7.5
	13	150#	32	46	0	0	0.657	9.25	7.5
	15	145#	32	46	0	0	0.828	9.50	7.5
UF72G5	10	170#	46	42	4	0	0.000	9.00	7.5
	12	165#	46	44	4	0	0.186	9.00	7.5
	14	160#	46	46	4	0	0.604	9.25	7.5
	16	150#	46	42	0	0	0.903	9.50	7.5
UF72G6	13	160#	52	40	8	0	0.000	9.00	7.5
	15	155#	52	42	4	0	0.000	9.00	7.5
	17	150#	52	42	4	0	0.000	9.00	7.5
UF84G4	10	190#	32	66	12	0	0.000	9.00	7.5
	12	185#	32	70	16	0	0.938	9.50	7.5
	14	180#	32	72	16	0	1.310	10.00	7.5
	16	170#	32	68	8	0	1.074	9.50	7.5
UF84G5	11	185#	46	52	8	0	0.000	9.00	7.5
	13	180#	46	54	8	0	0.269	9.00	7.5
	15	175#	46	56	8	0	0.657	9.25	7.5
	17	170#	46	58	8	0	1.038	9.50	7.5
UF84G6	16	170#	52	50	8	0	0.000	9.00	7.5
	18	165#	52	50	8	0	0.000	9.00	7.5

Note: Adding bottom flange width does not necessarily increase the span capabilities

* Offset at girder end

Span capability exceeds maximum shipping weight of 200 kips

Design Parameters:

- PGSuper V. 1.4
- WSDOT BDM LRFD design criteria
- Slab f'c = 4.0 ksi
- No vertical or horizontal curve
- 2.0% roadway crown slope
- Interior Girder w/ barrier load (6 girder bridge)
- Standard WSDOT "F" shape barrier
- Simple girder span lengths are CL bearing to CL bearing
- Under normal exposure condition and 75% relative humidity
- Spans reported in 5 ft. increments
- Only flexural service and strength checked; Lifting and hauling checks not necessarily satisfied

Design Table ~ 1'-0" Solid Slab with 5" CIP Topping

Deck
5" concrete deck @ 4 ksi

Strand
0.6" dia., 270 ksi Low Relaxation

Span Length (ft)	Concrete		Strand Layout							Total Jacking Force (kip)	Location of C.G. of Strands, E (in)	A (in)	Camber (in)		
	f'_{ci} (ksi)	f'_c (ksi)	3" Top Temp	2" Bot. bonded	2" Bot. unbonded	4" Bot. bonded	4" Bot. unbonded	6" Bot. bonded	Total*				D (40 Days)	D (120 Days)	C
20	6.0	7.5	2	6	0	0	0	0	8	352	2.00	5.25	0.18	0.20	0.03
25	6.0	7.5	2	8	0	0	0	0	10	439	2.00	5.50	0.36	0.40	0.07
30	6.0	7.5	2	10	2	0	0	0	14	615	2.00	5.75	0.78	0.88	0.15
35	6.0	7.5	2	12	2	0	0	0	16	703	2.00	6.00	1.13	1.28	0.28
40	6.0	7.5	2	12	4	2	0	0	20	879	2.29	6.25	1.60	1.82	0.50
43	6.0	7.5	2	12	4	6	0	0	24	1055	2.67	6.50	1.93	2.20	0.70

Design Parameters:
~PGSuper Version 2.0.0
~WSDOT BDM LRFD design criteria
~No vertical or horizontal curve or skew was used
~Simple span length is CL bearing to CL bearing
~Standard WSDOT "F" shape barrier
~Normal exposure condition and 75% relative humidity
~Bridge width of 44' with 3 lanes on the structure

~Total jacking force listed is for all bottom strands and top strands
~Location of C.G. of strands is summation of all *permanent* strands (bonded and unbonded)
~LL distribution factors were calculated using section type "I" from AASHTO LRFD Table 4.6.2.2.1-1
~2" future HMA overlay with density of 140 pcf
~For design without 2" future HMA overlay adding 2 ft to the span lengths in the table will approximate the span capability of each design

* Total strands include all bottom strands and top strands

Design Table ~ 1'-6" Voided Slab with 5" CIP Topping

Deck
5" concrete deck @ 4 ksi

Strand
0.6" dia., 270 ksi Low Relaxation

Span Length (ft)	Concrete		Strand Layout							Total Jacking Force (kip)	Location of C.G. of Strands, E (in)	A (in)	Camber (in)		C
	f'_{ci} (ksi)	f'_c (ksi)	3" Top Temp	2" Bot. bonded	2" Bot. unbonded	4" Bot. bonded	4" Bot. unbonded	6" Bot. bonded	Total*				D (40 Days)	D (120 Days)	
40	6.0	7.5	2	12	0	0	0	0	14	615	2.00	5.75	0.69	0.77	0.14
45	6.0	7.5	2	12	2	0	0	0	16	703	2.00	5.75	0.95	1.07	0.23
50	6.0	7.5	2	14	4	0	0	0	20	879	2.00	6.50	1.56	1.77	0.40
55	6.0	8.0	2	14	4	4	0	0	24	1055	2.44	6.75	2.03	2.30	0.58
60	6.0	8.0	2	12	6	8	0	0	28	1230	2.80	7.00	2.41	2.73	0.86
65	6.5	8.0	4	12	6	12	0	2	36	1582	3.23	7.00	2.86	3.20	1.18
68	7.0	8.5	4	12	6	12	0	4	38	1670	3.43	6.75	2.84	3.16	1.32

Design Parameters:
~PGSuper Version 2.0.0
~WSDOT BDM LRFD design criteria
~No vertical or horizontal curve or skew was used
~Simple span length is CL bearing to CL bearing
~Standard WSDOT "F" shape barrier
~Normal exposure condition and 75% relative humidity
~Bridge width of 44' with 3 lanes on the structure

~Total jacking force listed is for all bottom strands and top strands
~Location of C.G. of strands is summation of all *permanent* strands (bonded and unbonded)
~LL distribution factors were calculated using section type "F" from AASHTO LRFD Table 4.6.2.2.1-1
~2" future HMA overlay with density of 140 pcf
~For design without 2" future HMA overlay adding 2 ft to the span lengths in the table will approximate the span capability of each design

* Total strands include all bottom strands and top strands

Design Table ~ 2'-2" Voided Slab with 5" CIP Topping

Deck
5" concrete deck @ 4 ksi

Strand
0.6" dia., 270 ksi Low Relaxation

Span Length (ft)	Concrete		Strand Layout							Total Jacking Force (kip)	Location of C.G. of Strands, E (in)	A (in)	Camber (in)		
	f'_{ci} (ksi)	f'_c (ksi)	3" Top # of strands	3" Top Temp/ Perm **	2" Bot. bonded	2" Bot. unbonded	4" Bot. bonded	4" Bot. unbonded	6" Bot. bonded	Total*			D (40 Days)	D (120 Days)	C
60	6.0	7.5	4	T	14	4	0	0	0	22	967	2.00	5.75	0.93	1.03	0.25
65	6.0	7.5	4	T	14	4	2	0	0	24	1055	2.25	5.75	1.08	1.20	0.35
70	6.0	7.5	4	T	12	6	6	0	0	28	1230	2.67	6.00	1.41	1.57	0.49
75	6.0	8.5	4	T	12	6	10	0	0	32	1406	2.91	6.50	1.82	2.02	0.65
80	6.0	9.0	4	T	12	6	12	2	0	36	1582	3.00	6.75	2.27	2.53	0.85
85	6.5	9.0	4	P	12	6	16	2	2	42	1846	3.33	6.50	2.35	2.63	1.05
90	7.0	9.0	4	P	12	6	14	4	6	46	2021	3.63	6.50	2.48	2.75	1.32

Design Parameters:
~PGSuper Version 2.0.0
~WSDOT BDM LRFD design criteria
~No vertical or horizontal curve or skew was used
~Simple span length is CL bearing to CL bearing
~Standard WSDOT "F" shape barrier
~Normal exposure condition and 75% relative humidity
~Bridge width of 44' with 3 lanes on the structure

~Total jacking force listed is for all bottom strands and top strands
~Location of C.G. of strands is summation of all *permanent* strands (top and bottom, bonded and unbonded)
~LL distribution factors were calculated using section type "I" from AASHTO LRFD Table 4.6.2.2.1-1
~2" future HMA overlay with density of 140 pcf
~For design without 2" future HMA overlay adding 3 ft to the span lengths in the table will approximate the span capability of each design

* Total strands include all bottom strands and top strands
** T = Temporary top strands, P = Permanent top strands

Concrete Strength:		f'_{ci} = 6.5 ksi		f'_c = 8.0 ksi			
Prestressing Strands:		0.6" diameter		f_{pu} = 270 ksi, Low Relaxation			
Section		Span	Strands		Strand Layout		Camber
h (in)	b_f (ft)	L (ft)	#	F_{jack} (kips)	E (in)*	F_o (in)**	C_{final} (in)
20	9	25	12	527	7.0	14	6/16
	10	25	14	615	7.3	14	5/16
	11	25	14	615	7.5	14	5/16
24	9	35	18	791	7.6	16	13/16
	10	35	20	879	8.3	16	14/16
	11	30	16	703	8.0	16	8/16
28	9	40	20	879	8.0	18	1
	10	40	22	967	8.4	18	1 2/16
	11	35	18	791	8.4	18	11/16
32	9	50	24	1055	8.3	20	1 9/16
	10	45	22	967	8.5	20	1 2/16
	11	45	24	1055	8.8	20	1 5/16
36	9	55	24	1055	7.9	24	1 11/16
	10	50	24	1055	8.6	24	1.46
	11	45	20	879	8.5	24	0.99

* Offset for all strands at midpoint

** Offset for harped strands at endblock

Design Parameters:

WSDOT BDM LRFD Design Criteria

Flexural design of interior girder

Simple span on expansion bearings

Shape F traffic barriers on 6 girder bridge

0.25' overlay

One straight strand in each web

Span capability of Double-Tee Decked Girders

Concrete Strength:		f'_{ci} = 6.5 ksi		f'_c = 8.0 ksi			
Prestressing Strands:		f_{pu} = 270 ksi, Low Relaxation					
Section		Span	0.5” Diameter Strands		Strand Layout		Camber
h (in)	b_f (ft)	L (ft)	#	F_{jack} (kips)	E (in)*	F_o (in)**	C_{final} (in)
27	4	60	21	923	5.0	10	1 7/16
	5	55	21	923	5.6	10	1 6/16
	6	50	20	879	5.9	10	1 3/16

Section		Span	0.6” Diameter Strands		Strand Layout		Camber
h (in)	b_f (ft)	L (ft)	#	F_{jack} (kips)	E (in)*	F_o (in)**	C_{final} (in)
27	4	60	30	929	5.0	12	1 7/16
	5	55	30	929	5.6	12	1 7/16
	6	45	23	713	5.8	12	13/16

* Offset for all strands at midpoint

** Offset for harped strands at endblock

Design Parameters:

WSDOT BDM LRFD Design Criteria

Flexural design of interior girder

Simple span on expansion bearings

Shape F traffic barriers on 6 girder bridge

0.25’ overlay

One straight strand in each web

	f'ci = 4.0 ksi f'c = 5.0 ksi, 0.6"ø Strands					f'ci = 5.0 ksi f'c = 6.0 ksi, 0.6"ø Strands				
Girder Type	Girder Width (ft)	Span Length (ft)	Straight	Harped	Temp.	Girder Width (ft)	Span Length (ft)	Straight	Harped	Temp.
W35DG	4	85	18	15	2	4	95	18	10	2
	5	70	22	7	2	5	80	18	8	2
	6	60	22	5	4	6	70	18	6	4
W41DG	4	95	22	12	2	4	105	20	8	2
	5	80	24	7	2	5	95	18	11	2
	6	70	22	7	4	6	80	20	6	4
W53DG	4	115	26	11	2	4	125	22	8	2
	5	105	26	12	2	5	120	22	12	2
	6	90	26	8	4	6	105	22	10	4
W65DG	4	135	26	16	2	4	145	24	9	2
	5	125	26	18	2	5	140	24	14	2
	6	110	26	14	4	6	125	24	12	4

f'ci = 6.0 ksi, f'c = 9 ksi Strand diameter = 0.6" Grade 270 ksi low relaxation												
Girder Type	Girder Spacing (ft)	Span Length (ft)	Cast-in-place Closures	PT Ducts - Strands/Duct (Duct#4 @ Bottom)				Jacking Force** (kips)	Tendon Force after Seating** (kips)	Tendson Loss* (kips)	E1 (in)	E3 (in)
			Length (ft)	1	2	3	4					
WF74PTG Post-tensioned Before Slab Casting	6	170	2	-	22	22	22	2970	2680	730	36.4	12.7
	8	155	2	-	22	22	22	2970	2670	740	36.4	12.7
	10	140	2	-	22	22	22	2970	2650	760	36.4	12.7
	12	120	2	-	22	22	22	2970	2630	780	36.4	12.7
	14	100	2	-	22	22	22	2970	2590	815	36.4	12.7
WF74PTG Post-tensioned After Slab Casting	6	195	2	-	22	22	22	2960	2690	680	36.4	12.7
	8	185	2	-	22	22	22	2960	2710	680	36.4	12.7
	10	175	2	-	22	22	22	2960	2690	690	36.4	12.7
	12	165	2	-	22	22	22	2990	2720	700	36.4	12.7
	14	155	2	-	22	22	22	3020	2750	710	36.4	12.7
WF83PTG Post-tensioned Before Slab Casting	6	185	2	11	22	22	22	3500	3160	850	33.8	14.5
	8	165	2	-	22	22	22	2985	2710	720	36.4	12.7
	10	155	2	-	22	22	22	2985	2700	730	36.4	12.7
	12	135	2	-	22	22	22	2985	2680	740	36.4	12.7
	14	115	2	-	22	22	22	2985	2620	810	33.8	12.7
WF83PTG Post-tensioned After Slab Casting	6	*205	2	11	22	22	22	3500	3200	810	33.8	14.5
	8	200	2	11	22	22	22	3500	3210	800	37.6	14.5
	10	195	2	22	22	22	22	4000	3640	940	37.6	15.7
	12	185	2	22	22	22	22	4000	3640	940	37.6	15.7
	14	175	2	22	22	22	22	4000	3640	940	37.6	15.7
WF95PTG Post-tensioned Before Slab Casting	6	200	2	11	22	22	22	3500	3150	860	46.1	14.5
	8	185	2	11	22	22	22	3500	3110	980	46.1	14.5
	10	175	2	11	22	22	22	3500	3130	880	46.1	14.5
	12	155	2	8	22	22	22	3360	2990	860	44.9	14.1
	14	135	2	-	22	22	22	3000	2630	810	59.0	12.7
WF95PTG Post-tensioned After Slab Casting	6	235	2	11	22	22	22	3500	3210	800	46.1	14.5
	8	230	2	22	22	22	22	4000	3650	930	37.6	15.7
	10	215	2	22	22	22	22	4000	3640	940	37.6	15.7
	12	205	2	22	22	22	22	4000	3640	950	37.6	15.7
	14	190	2	22	22	22	22	4000	3630	960	37.6	15.7

* Controlled by over-reinforced section (see LRFD Sec. 5.7.3.3)

** Total force calculated at jacking end of post-tensioned girder (rounded to the nearest 10)

Design Parameters:

- PGSplice V. 0.3
- WSDOT BDM LRFD design criteria
- No vertical or horizontal curve
- 2.0% roadway crown slope
- Interior Girder w/ barrier load (6 girder bridge)
- Only flexural service and strength checked; Lifting and hauling checks not necessarily satisfied
- Simple girder span lengths are CL bearing to CL bearing
- Slab f'c = 4.0 ksi
- Standard WSDOT "F" shape barrier
- Under normal exposure condition and 75% relative humidity
- Spans reported in 5'-0" increments
- Designs based on "normally" reinforced sections (c/de < 0.42 LRFD 5.7.3.3)
- Designs based on 22 strands/duct
- For 6'-10' girder spacing -- 7.5" slab
- For 12' girder spacing -- 8.0" slab
- For 14' girder spacing -- 8.75" slab
- Girders PT'd before slab pour are assumed to be PT'd adjacent to structure
- All spec checks at wet joints have been ignored. It isassumed that the designer can modify the wet joints to reach the required span as shown in the table. These modifications are outside the scope of this table.

Girder Type	Girder Spacing (ft)	Span Length (ft)	End Segments	Middle Segment	Spliced Post-Tensioned Girder								
			No. of Straight Strands	No. of Straight Strands	PT Ducts ~ Strands/Duct (Duct #4 @ Bottom)				Jacking Force* (kips)	Tendon Force after Seating* (kips)	Tendon Loss* (kips)	E1 (in)	E3 (in)
					1	2	3	4					
U54PTG4	8	135	4	6	-	-	11	22	2904	2636	570	20.0	8.9
	14	150	4	14	-	2	22	22	4048	3708	760	31.5	10.1
U54PTG5	9	135	4	8	-	-	12	22	2992	2764	578	19.7	9.0
	15	150	4	14	-	6	22	22	4400	4032	826	29.8	10.9
U54PTG6	10	135	4	6	-	-	18	22	3520	3200	684	18.3	9.5
	16	145	4	14	-	8	22	22	4576	4196	852	29.0	11.2
U66PTG4	8	155	4	8	-	-	15	22	3256	2944	648	18.9	9.3
	14	170	4	16	-	7	22	22	4488	4088	864	29.4	11.0
U66PTG5	9	155	4	8	-	-	17	22	3432	3110	678	18.5	9.4
	15	170	4	16	-	10	22	22	4752	4334	910	29.3	11.3
U66PTG6	10	155	4	8	-	-	21	22	3784	3434	742	17.7	9.7
	16	165	4	14	-	12	22	22	4928	4500	940	27.7	11.7
U78PTG4	8	175	4	10	-	-	19	22	3608	3262	722	18.1	9.6
	16	190	4	20	-	15	22	22	5192	4718	1014	26.8	12.1
U78PTG5	9	180	4	10	-	2	22	22	4048	3692	776	31.5	10.1
	17	195	4	22	-	21	22	22	5720	5202	1110	25.2	12.6
U78PTG6	10	180	4	10	-	6	22	22	4400	4018	840	29.8	10.9
	18	190#	4	20	2	22	22	22	5896	5400	1104	395.0	12.9

* Total force calculated at jacking end of post-tensioned girder

Span capability exceeds maximum shipping weight of 200 kips

Design Parameters:

- PGSplice V. 0.3
- WSDOT BDM LRFD design criteria
- No vertical or horizontal curve
- 2.0% roadway crown slope
- Interior Girder w/ barrier load (6 girder bridge)
- Only flexural service and strength checked; Lifting and hauling checks not necessarily satisfied
- Simple girder span lengths are CL bearing to CL bearing
- Standard WSDOT “F” shape barrier
- Under normal exposure condition and 75% humidity
- Spans reported in 5’-0” increments
- ”A” dimension = deck thickness + 2”
- Closure Pour for spliced girders is 2 ft,
  f’ci = 6.0 ksi, f’c = 9 ksi
- Girder f’ci = 6.0 ksi, f’c = 9.0 ksi, slab f’c = 4.0 ksi
- Girders are spliced in-place after slab is cast
- Prestressing and post-tensioning steel is 0.6” diameter, Grade 270
- End segments are 25% of total length, center segment is 50% of total length
- Range of applicability requirements in LRFD ignored; span lengths may be longer than allowed by LRFD
- Designs are based on a 22 diameter strand limit per 4” duct for high pressure grout
- All spec checks at wet joints have been ignored. It is assumed that the designer can modify the wet joints to reach the required span as shown in the table. These modifications are outside the scope of this table.

PRECAST PRESTRESSED GIRDERS

GIRDER DEPTH	2'-8"	3'-2"	3'-6"	4'-2"	4'-10"	5'-2"	6'-2"	6'-10⅝"	7'-10½"
W GIRDERS			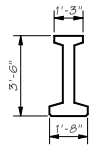 **W42G** SPAN LENGTH = 80 FT.	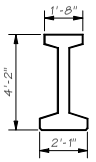 **W50G** SPAN LENGTH = 110 FT.	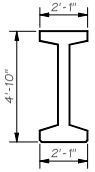 **W58G** SPAN LENGTH = 120 FT.		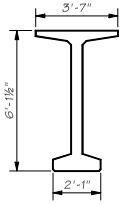 **W74G** SPAN LENGTH = 140 FT.		
WIDE FLANGE GIRDERS			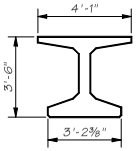 **WF42G** SPAN LENGTH = 110 FT.	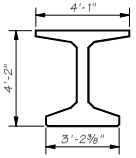 **WF50G** SPAN LENGTH = 130 FT.	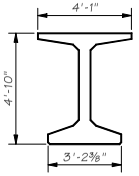 **WF58G** SPAN LENGTH = 145 FT.		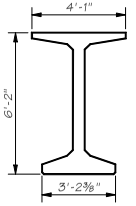 **WF74G** SPAN LENGTH = 165 FT.	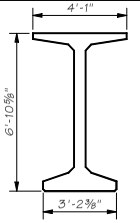 **WF83G** SPAN LENGTH = 175 FT.	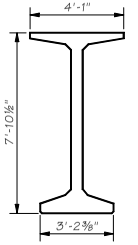 **WF95G** SPAN LENGTH = 175 FT.
BULB-TEE GIRDERS	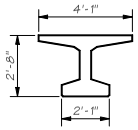 **W32BTG** SPAN LENGTH = 75 FT.	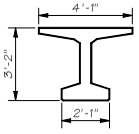 **W38BTG** SPAN LENGTH = 90 FT.				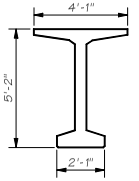 **W62BTG** SPAN LENGTH = 135 FT.			
THIN FLANGE DECK BULB-TEE	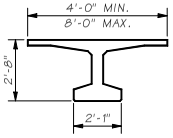 **W32TFG**	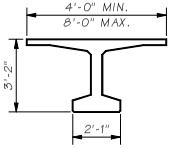 **W38TFG**		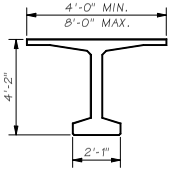 **W50TFG**		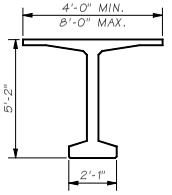 **W62TFG**			

NOTES:

1. SPAN LENGTHS SHOWN ARE THE MAXIMUM FOR EACH TYPE OF GIRDER USING PGSUPER PROGRAM.
2. THE CONCRETE COMPRESSIVE STRENGTHS FOR STANDARD DESIGNS ARE LIMITED TO 7.5 ksi AT TRANSFER AND 9.0 ksi AT FINAL.
3. THE DESIGN IS BASED ON 0.6" DIAM. LOW RELAXATION PRESTRESSING STRANDS.

Bridge Design Engr.	M:\STANDARDS\Girders\Design Charts\STD PC GIRDERS.MAN			REGION NO.	STATE	FED. AID PROJ. NO.	SHEET NO. / TOTAL SHEETS
Supervisor				10	WASH.		
Designed By				JOB NUMBER			
Checked By							
Detailed By							
Bridge Projects Engr.							
Prelim. Plan By							
Architect/Specialist	DATE	REVISION	BY	APP'D			

Tue Apr 08 13:59:49 2008

BRIDGE AND STRUCTURES OFFICE

Washington State Department of Transportation

STANDARD PRESTRESSED CONCRETE GIRDERS

I-GIRDER SECTIONS

BRIDGE SHEET NO. / SHEET / OF / SHEETS

JOB NO. ____ SHEET ____

SR ____

5.6-A1-1

PRECAST PRESTRESSED NON-COMPOSITE DECKED GIRDERS

GIRDER DEPTH	1'-0"	1'-6" TO 1'-8"	2'-2" TO 2'-4"	2'-11" TO 3'-0"	3'-5"	4'-5"	5'-5"
DECK BULB TEES				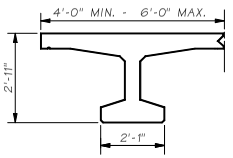 W35DG SPAN LENGTH = 90 FT.	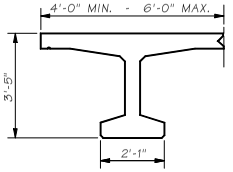 W41DG SPAN LENGTH = 105 FT.	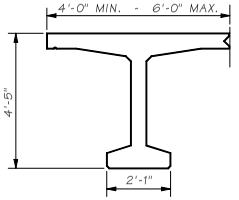 W53DG SPAN LENGTH = 125 FT.	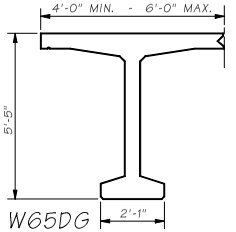 W65DG SPAN LENGTH = 145 FT.
DOUBLE TEES		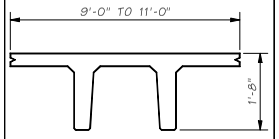 DOUBLE-TEE GIRDERS SPAN LENGTH = 25 FT.	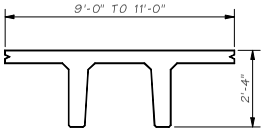 DOUBLE-TEE GIRDERS SPAN LENGTH = 40 FT.	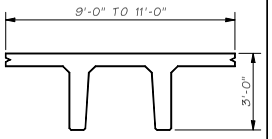 DOUBLE-TEE GIRDERS SPAN LENGTH = 55 FT.			
TRI-BEAM			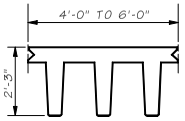 RIBBED GIRDERS SPAN LENGTH = 60 FT.				
SLABS	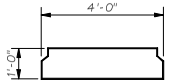 1'-0" DEEP SLAB SPAN LENGTH = 35 FT.	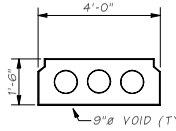 1'-6" DEEP SLAB SPAN LENGTH = 60 FT.	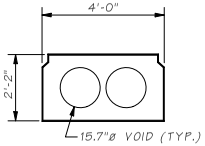 2'-2" DEEP SLAB SPAN LENGTH = 80 FT.				

NOTES:

1. SPAN LENGTHS SHOWN ARE THE MAXIMUM FOR EACH TYPE OF GIRDER.
2. SPAN LENGTHS SHOWN ARE FOR NON-COMPOSITE DECKED MEMBERS WITH 3" HMA OVERLAY.
3. DECKED MEMEBERS COULD BE DESIGNED AS COMPOSITE MEMBERS USING PGSUPER PROGRAM IF A MINIMUM OF 5" CAST-IN-PLACE SLAB IS PROVIDED.
4. THE CONCRETE COMPRESSIVE STRENGTHS FOR STANDARD DESIGNS ARE LIMITED TO 6.0 ksi AT TRANSFER AND 8.0 ksi AT FINAL.
5. THE DESIGN IS BASED ON 0.6" DIAM. LOW RELAXATION PRESTRESSING STRANDS.

Bridge Design Engr.	M:\STANDARDS\Girders\Design Charts\STD PC NON COMP DECKED GIRDERS.MAN				REGION NO.	STATE	FED. AID PROJ. NO.	SHEET NO.	TOTAL SHEETS
Supervisor					10	WASH			
Designed By					JOB NUMBER				
Checked By									
Detailed By									
Bridge Projects Engr.									
Prelim. Plan By									
Architect/Specialist	DATE	REVISION	BY	APPD					

BRIDGE AND STRUCTURES OFFICE

Washington State Department of Transportation

STANDARD PRESTRESSED CONCRETE GIRDERS

DECKED GIRDER SECTIONS

BRIDGE SHEET NO. / SHEET / OF / SHEETS

SR / JOB NO. / SHEET

5.6-A1-2

Tue Apr 08 14:01:07 2008

PRECAST POST-TENSIONED SPLICED GIRDERS

GIRDER DEPTH	4'-6", 5'-0", 5'-6", 6'-0", 6'-2", 6'-6"		7'-0"	8'-0"
SPLICED W-GIRDERS		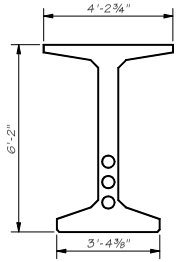 WF74PTG SPAN LENGTH = 170 FT.*, 195 FT.**	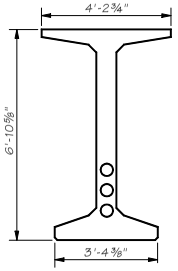 WF83PTG SPAN LENGTH = 185 FT.*, 205 FT.**	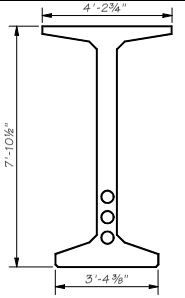 WF95PTG SPAN LENGTH = 200 FT.*, 235 FT.**
SPLICED TUB GIRDERS	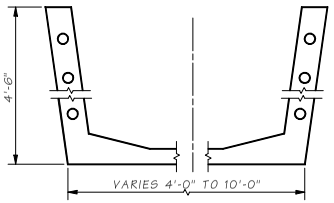 POST-TENSIONED TUB SECTION SPAN LENGTH = 150 FT.	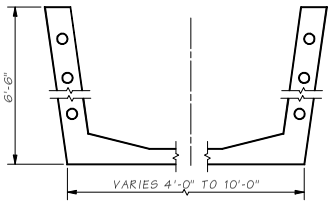 POST-TENSIONED TUB SECTION SPAN LENGTH = 180 FT.		
SPLICED FLANGED TUB GIRDERS	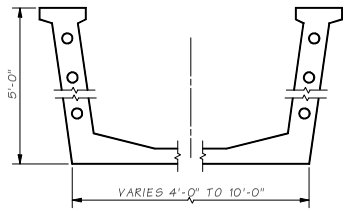 POST-TENSIONED TUB SECTION FOR S-I-P DECK PANEL SPAN LENGTH = 160 FT.		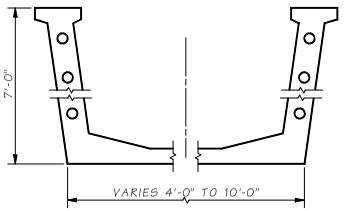 POST-TENSIONED TUB SECTION FOR S-I-P DECK PANEL SPAN LENGTH = 190 FT.	

NOTES:

1. SPAN LENGTHS SHOWN ARE THE MAXIMUM FOR EACH TYPE OF GIRDER USING PGSPLICE PROGRAM.
2. THE CONCRETE COMPRESSIVE STRENGTHS FOR STANDARD DESIGNS ARE LIMITED TO 7.5 ksi AT TRANSFER AND 9.0 ksi AT FINAL.
3. THE DESIGN IS BASED ON 0.6" DIAM. LOW RELAXATION PRESTRESSING STRANDS.
4. STRENGTH OF CONCRETE AT THE CLOSURES SHALL NOT EXCEED 6.0 ksi FOR POST-TENSIONING BEFORE SLAB CASTING AND 4.0 ksi FOR POST-TENSIONING AFTER SLAB CASTING.

* POST-TENSIONED BEFORE SLAB CASTING

** POST-TENSIONED AFTER SLAB CASTING

Bridge Design Engr.	M:\STANDARDS\Girders\Design Charts\STD PC PT SPLICED GIRDERS.MAN							
Supervisor				REGION NO.	STATE	FED. AID PROJ. NO.	SHEET NO.	TOTAL SHEETS
Designed By				10	WASH			
Checked By				JOB NUMBER				
Detailed By								
Bridge Projects Engr.								
Prelim. Plan By								
Architect/Specialist	DATE	REVISION	BY	APP'D				

Tue Apr 08 14:02:07 2008

BRIDGE AND STRUCTURES OFFICE

Washington State Department of Transportation

STANDARD PRESTRESSED CONCRETE GIRDERS

SPLICED-GIRDER SECTIONS

BRIDGE SHEET NO. / SHEET / OF / SHEETS

SR ____ JOB NO. ____ SHEET ____

PRECAST PRESTRESSED COMPOSITE TUB GIRDERS

GIRDER DEPTH	4'-6"	5'-0"	5'-6"	6'-0"	6'-6"	7'-0"
4'-0" WIDE	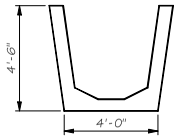 U54G4 SPAN LENGTH = 120 FT.	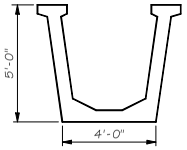 UF60G4 SPAN LENGTH = 140 FT.	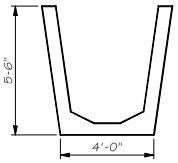 U66G4 SPAN LENGTH = 140 FT.	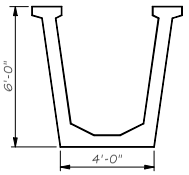 UF72G4 SPAN LENGTH = 155 FT.	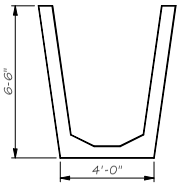 U78G4 SPAN LENGTH = 160 FT.	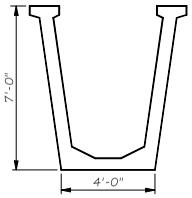 UF84G4 SPAN LENGTH = 180 FT.
5'-0" WIDE	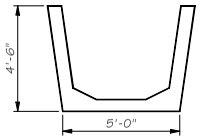 U54G5 SPAN LENGTH = 120 FT.	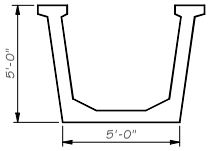 UF60G5 SPAN LENGTH = 145 FT.	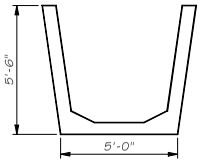 U66G5 SPAN LENGTH = 140 FT.	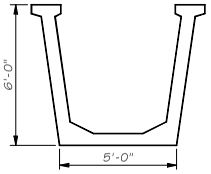 UF72G5 SPAN LENGTH = 160 FT.	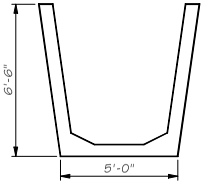 U78G5 SPAN LENGTH = 160 FT.	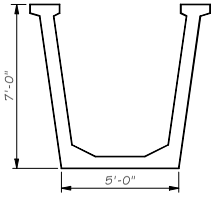 UF84G5 SPAN LENGTH = 180 FT.
6'-0" WIDE	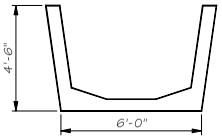 U54G6 SPAN LENGTH = 120 FT.	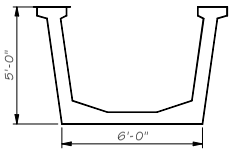 UF60G6 SPAN LENGTH = 145 FT.	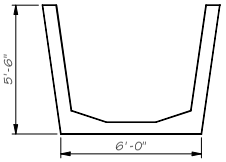 U66G6 SPAN LENGTH = 140 FT.	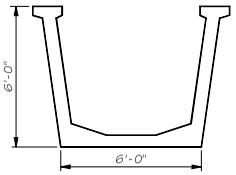 UF72G6 SPAN LENGTH = 160 FT.	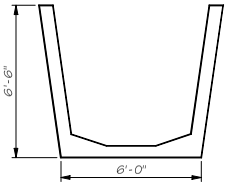 U78G6 SPAN LENGTH = 160 FT.	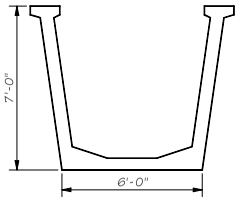 UF84G6 SPAN LENGTH = 180 FT.

NOTES:

1. SPAN LENGTHS SHOWN ARE THE MAXIMUM FOR EACH TYPE OF GIRDER USING PGSUPER PROGRAM.
2. THE CONCRETE COMPRESSIVE STRENGTHS FOR STANDARD DESIGNS ARE LIMITED TO 7.5 ksi AT TRANSFER AND 9.0 ksi AT FINAL.
3. THE DESIGN IS BASED ON 0.6" DIAM. LOW RELAXATION PRESTRESSING STRANDS.

Bridge Design Engr.	M:\STANDARDS\Girders\Design Charts\STD PC TUB GIRDERS.MAN				REGION NO.	STATE	FED. AID PROJ. NO.	SHEET NO. / TOTAL SHEETS
Supervisor					10	WASH.		
Designed By					JOB NUMBER			
Checked By								
Detailed By								
Bridge Projects Engr.								
Prelim. Plan By								
Architect/Specialist	DATE	REVISION	BY	APP'D				

BRIDGE AND STRUCTURES OFFICE

Washington State Department of Transportation

STANDARD PRESTRESSED CONCRETE GIRDERS

TUB SECTIONS

BRIDGE SHEET NO. / SHEET / OF / SHEETS

SR ____ JOB NO. ____ SHEET ____

5.6-A1-4

Tue Apr 08 14:02:48 2008

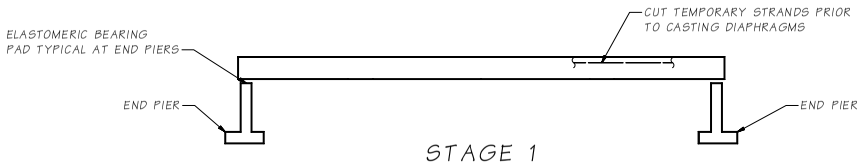

STAGE 1
SET GIRDERS IN PLACE

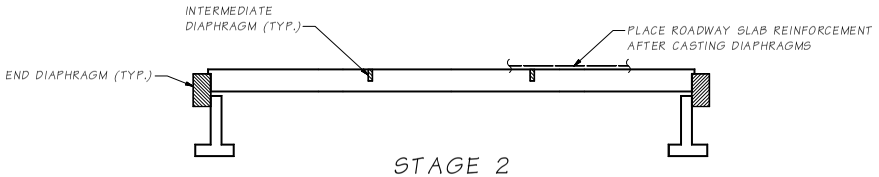

STAGE 2
CAST DIAPHRAGMS AND PLACE REINFORCEMENT

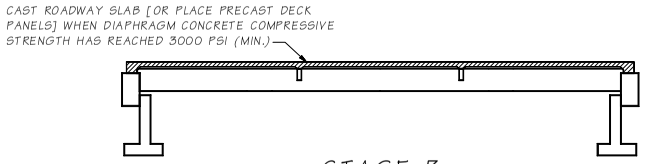

STAGE 3
CAST ROADWAY SLAB

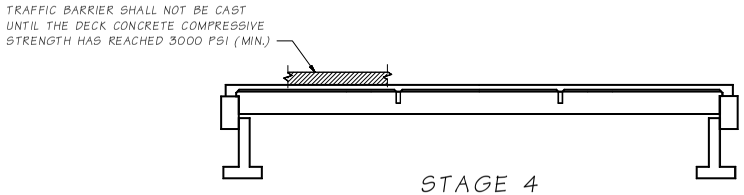

STAGE 4
CAST TRAFFIC BARRIERS

CONSTRUCTION SEQUENCE ~ SUPERSTRUCTURE

Bridge Design Engr.	M:\STANDARDS\Girders\CONSTRUCTION SEQUENCE\CONSEQ-SINGLESPAN.MAN				REGION NO.	STATE	FED. AID PROJ. NO.	SHEET NO.	TOTAL SHEETS	BRIDGE AND STRUCTURES OFFICE
Supervisor					10	WASH.				Washington State Department of Transportation
Designed By					JOB NUMBER					STANDARD PRESTRESSED CONCRETE GIRDERS
Checked By										SINGLE SPAN PRESTRESSED GIRDER CONSTRUCTION SEQUENCE
Detailed By										BRIDGE SHEET NO.
Bridge Projects Engr.										SHEET OF SHEETS
Prelim. Plan By										
Architect/Specialist	DATE	REVISION	BY	APP'D						

SHEET
JOB NO.
SR.

5.6-A2-1

Fri Feb 01 12:50:12 2008

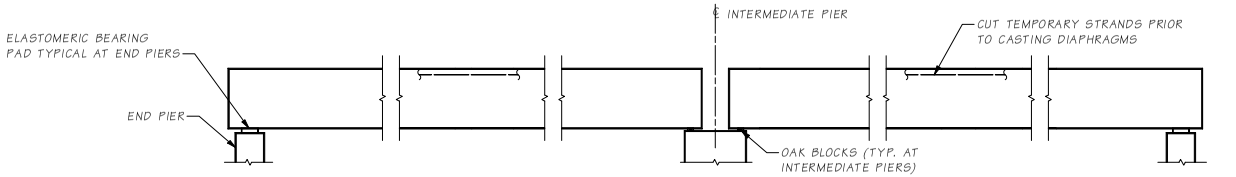

STAGE 1
SET GIRDERS IN PLACE

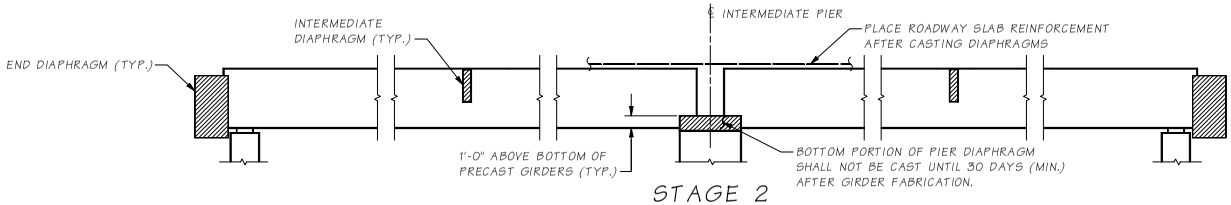

STAGE 2
CAST DIAPHRAGMS AND PLACE ROADWAY SLAB REINFORCEMENT

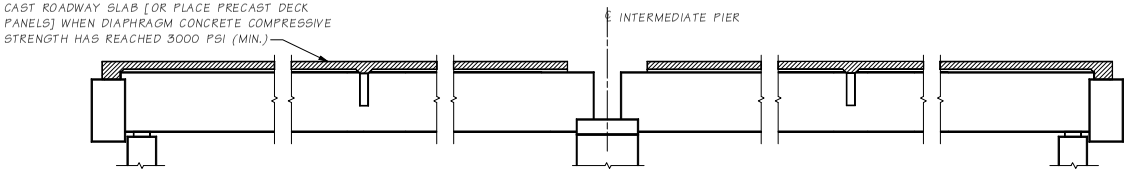

STAGE 3
CAST ROADWAY SLAB

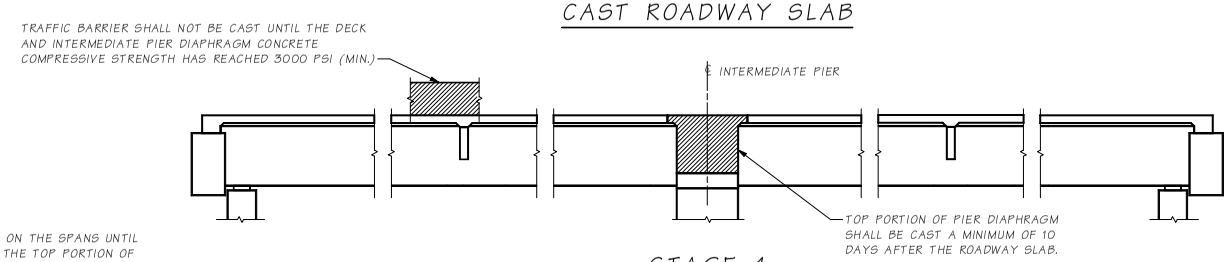

NOTE:
NO LIVE LOAD SHALL BE ALLOWED ON THE SPANS UNTIL THE COMPRESSIVE STRENGTH OF THE TOP PORTION OF THE PIER DIAPHRAGM HAS REACHED 3000 PSI (MIN.).

STAGE 4
COMPLETE DIAPHRAGMS

CONSTRUCTION SEQUENCE ~ SUPERSTRUCTURE

Bridge Design Engr.	M:\STANDARDS\Girders\CONSTRUCTION SEQUENCE\CONSEQ_MULTIPLE_SPAN.MAN				REGION NO.	STATE	FED. AID PROJ. NO.	SHEET NO.	TOTAL SHEETS
Supervisor					10	WASH.			
Designed By					JOB NUMBER				
Checked By									
Detailed By									
Bridge Projects Engr.									
Prelim. Plan By									
Architect/Specialist	DATE	REVISION	BY	APP'D					

BRIDGE AND STRUCTURES OFFICE

Washington State Department of Transportation

MULTIPLE SPAN PRESTRESSED GIRDER CONSTRUCTION SEQUENCE

BRIDGE SHEET NO. 0
SHEET OF SHEETS

SR JOB NO. SHEET 0

5.6-A2-2

Fri Feb 01 12:50:19 2008

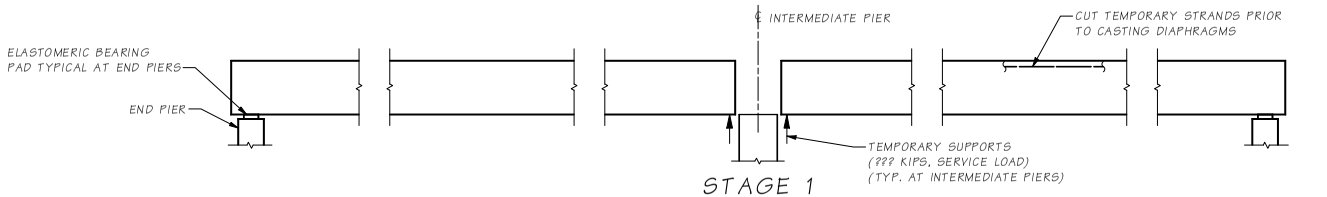

STAGE 1

SET GIRDERS ON TEMPORARY SUPPORT

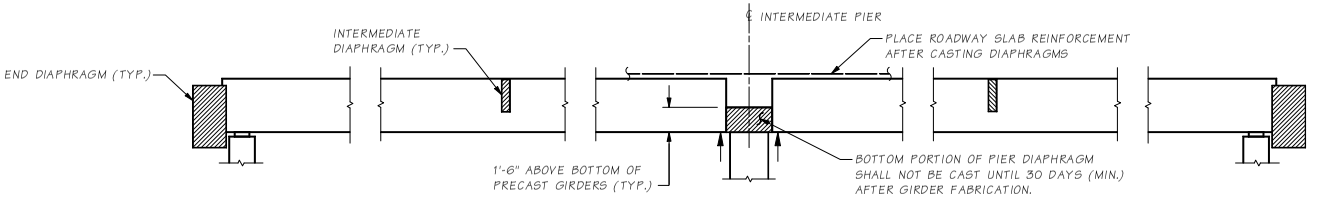

STAGE 2

CAST DIAPHRAGMS AND PLACE ROADWAY SLAB REINFORCEMENT

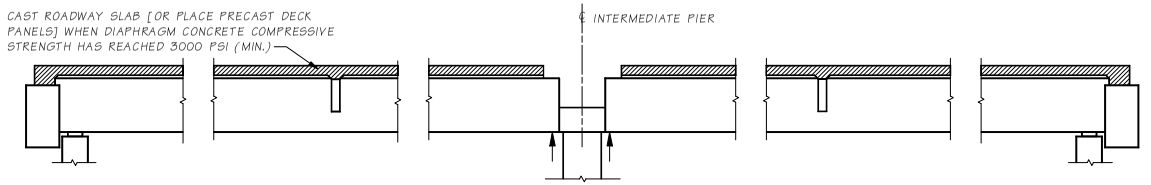

STAGE 3

CAST ROADWAY SLAB

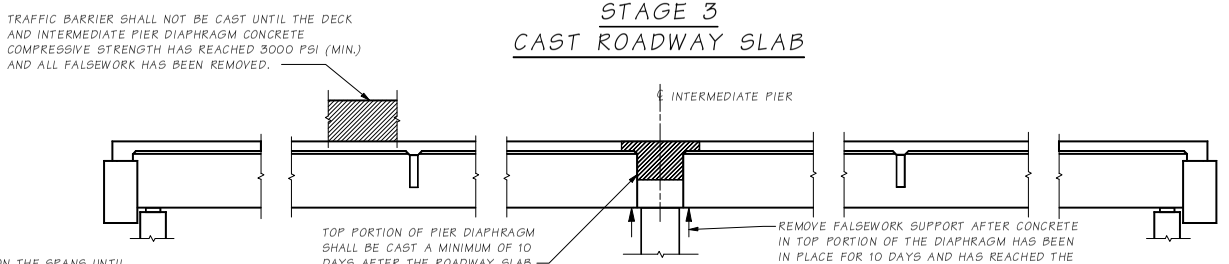

NOTE:
NO LIVE LOAD SHALL BE ALLOWED ON THE SPANS UNTIL THE COMPRESSIVE STRENGTH OF THE TOP PORTION OF THE PIER DIAPHRAGM HAS REACHED 3000 PSI (MIN.).

STAGE 4

COMPLETE DIAPHRAGMS AND REMOVE TEMPORARY SUPPORT

CONSTRUCTION SEQUENCE ~ SUPERSTRUCTURE

Bridge Design Engr.	M:\STANDARDS\Girders\CONSTRUCTION SEQUENCE\CONSEQ-RAISED.man				REGION NO.	STATE	FED. AID PROJ. NO.	SHEET NO.	TOTAL SHEETS
Supervisor					10	WASH.			
Designed By					JOB NUMBER				
Checked By									
Detailed By									
Bridge Projects Engr.									
Prelim. Plan By									
Architect/Specialist	DATE	REVISION	BY	APP'D					

Fri Feb 01 12:50:15 2008

BRIDGE AND STRUCTURES OFFICE

Washington State Department of Transportation

STANDARD PRESTRESSED CONCRETE GIRDER

RAISED CROSSBEAM PRESTRESSED GIRDER CONSTRUCTION SEQUENCE

BRIDGE SHEET NO.

SHEET OF SHEETS

SR 5 JOB NO. Job SHEET 1

5.6-A2-3

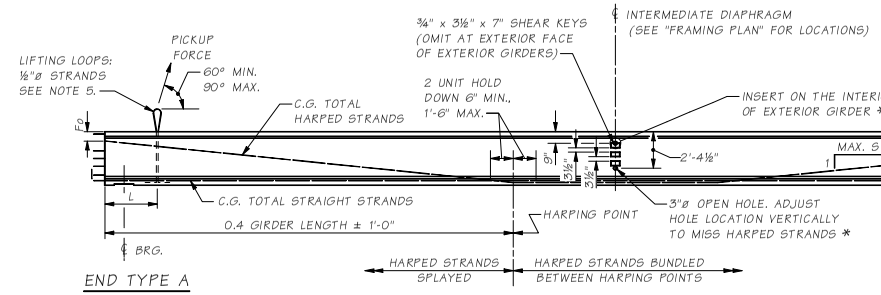

GIRDER ELEVATION

* OMIT HOLES AND PLACE INSERTS ON THE INTERIOR FACE OF EXTERIOR GIRDERS. PLACE HOLES AND INSERTS PARALLEL TO SKEW. INSERTS SHALL BE 1"ø BURKE HI-TENSILE, LANCASTER MALLEABLE, DAYTON-SUPERIOR F-62 FLARED THIN SLAB (1" x 4⅝") FERRULE OR APPROVED EQUAL. (TYP.)

** MAXIMUM SLOPE FOR STRANDS
6 : 1 FOR EACH ½"ø STRAND OR
8 : 1 FOR EACH 0.6"ø STRAND

NOTES

1. PLAN LENGTH SHALL BE INCREASED AS NECESSARY TO COMPENSATE FOR SHORTENING DUE TO PRESTRESS AND SHRINKAGE.
2. ALL PRETENSIONED STRANDS SHALL BE [½"ø OR 0.6"ø] LOW RELAXATION STRANDS (AASHTO M203 GRADE 270.)
3. FOR END TYPES A, C AND D, CUT ALL STRANDS FLUSH WITH THE GIRDER ENDS AND PAINT WITH AN APPROVED EPOXY RESIN, EXCEPT FOR EXTENDED STRANDS AS SHOWN. FOR END TYPE B CUT ALL STRANDS 1" BELOW CONCRETE SURFACE AND GROUT WITH AN APPROVED EPOXY GROUT.
4. THE TOP SURFACE OF THE GIRDER FLANGE SHALL BE ROUGHENED IN ACCORDANCE WITH SECTION 6-02.3(25)H OF THE STANDARD SPECIFICATIONS.
5. LIFTING EMBEDMENTS SHALL BE INSTALLED IN ACCORDANCE WITH SECTION 6-02.3(25)L OF THE STANDARD SPECIFICATIONS.
6. CAUTION SHALL BE EXERCISED IN HANDLING AND PLACING GIRDERS. ALL GIRDERS SHALL BE CHECKED BY THE CONTRACTOR TO ENSURE THAT THEY ARE BRACED ADEQUATELY TO PREVENT TIPPING AND TO CONTROL LATERAL BENDING DURING SHIPPING. ONCE ERECTED, ALL GIRDERS SHALL BE BRACED LATERALLY TO PREVENT TIPPING UNTIL THE DIAPHRAGMS ARE CAST AND CURED.
7. FORMS FOR BEARING PAD RECESSES SHALL BE CONSTRUCTED AND FASTENED IN SUCH A MANNER AS TO NOT CAUSE DAMAGE TO THE GIRDER DURING THE STRAND RELEASE OPERATION.

INTERMEDIATE DIAPHRAGM:
1/2 point of span for span lengths 40'-0" to 80'-0".
No intermediate diaphragm for span lengths 40'-0" or less.

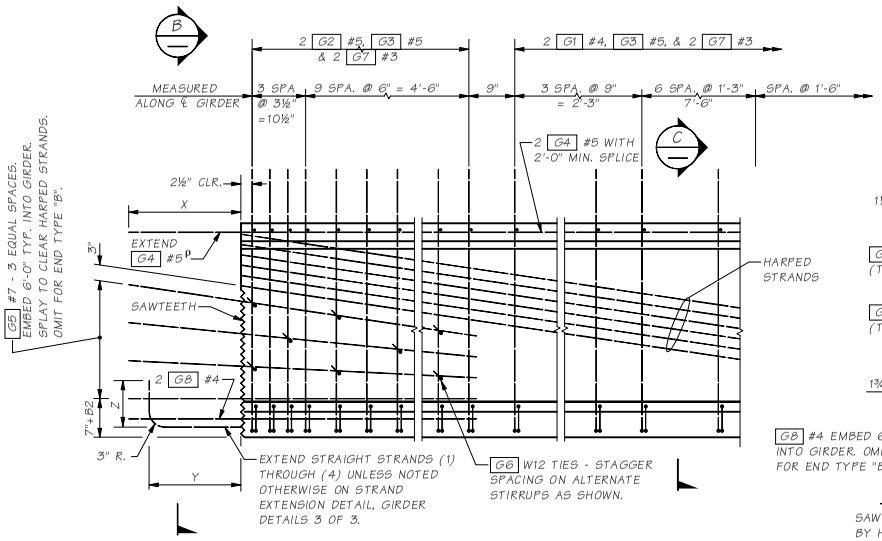

TYPICAL END ELEVATION

END TYPE C SHOWN, OTHER END TYPES SIMILAR.

ρ FIELD BENDING REQUIRED TO OBTAIN 1½" CONCRETE COVER AT PAVEMENT SEAT.

(stirrup spacing shall be determined by the designer)

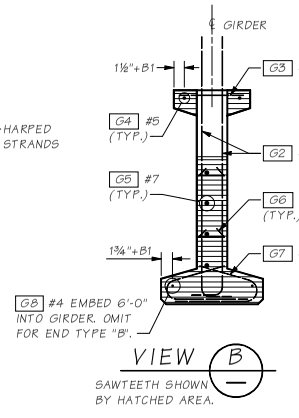

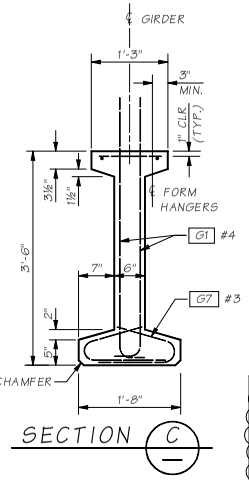

Diaphragm Type	END TYPE	BEARING RECESS	X	Y	Z	SAWTEETH
End Diaph. on Girder	A	YES	1'-10"	1'-6"	9"	YES
"L" Abutment	B	YES	0"	0"	0"	NO
Hinge Diaph. @ Intermediate Pier	C	NO	1'-10"	1'-6"	9"	YES
Fixed Diaph. @ Intermediate Pier	D	NO	1'-10"	ALT. 1 OR ALT. 2 STRAND EXTENSION		YES

FOR END TYPE "C"

ENDS AHEAD ON STATION
G5 BARS LEFT OF ℄
B1 = 0" (G4 , G8)
B2 = 0" (G5)
ENDS BACK ON STATION
G5 BARS RIGHT OF ℄
B1 = 1½"(G4 , G8)
B2 = 3" (G5)

MARK	LOCATION	SIZE	
G1	GIRDER STIRRUPS	4	
G2	GIRDER END STIRRUPS	5	
G3	GIRDER TOP FLANGE	5	STR.
G4	GIRDER LONGIT. FULL LENGTH	5	STR.
G5	GIRDER END LONGIT.	7	STR.
G6	GIRDER END TIES	W12 δ	
G7β	GIRDER BOT. FLANGE TIES	3	
G8	GIRDER END LONGIT.	4	STR.
G9β	GIRDER BOT. FLANGE TIES	3	
G10β	GIRDER BOT. FLANGE TIES	3	

BENDING DIAGRAM (ALL DIMENSIONS ARE OUT TO OUT)
NOTE: FOR DIMENSION "A", SEE "GIRDER SCHEDULE"

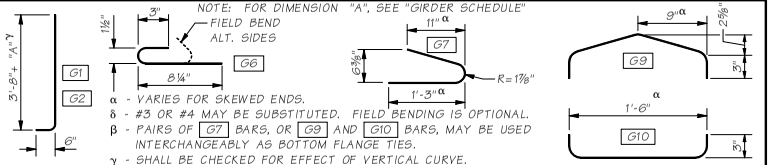

α - VARIES FOR SKEWED ENDS.
δ - #3 OR #4 MAY BE SUBSTITUTED. FIELD BENDING IS OPTIONAL.
β - PAIRS OF G7 BARS, OR G9 AND G10 BARS, MAY BE USED INTERCHANGEABLY AS BOTTOM FLANGE TIES.
γ - SHALL BE CHECKED FOR EFFECT OF VERTICAL CURVE.

Bridge Design Engr.	M:\STANDARDS\Girders\I-Girders\W42G\W42G1.man			REGION NO.	STATE	FED. AID PROJ. NO.	SHEET NO.	TOTAL SHEETS
Supervisor				10	WASH.			
Designed By				JOB NUMBER				
Checked By								
Detailed By								
Bridge Projects Engr.								
Prelim Plan By								
Architect/Specialist	DATE	REVISION	BY	APPD				

BRIDGE AND STRUCTURES OFFICE

Washington State Department of Transportation

STANDARD PRESTRESSED CONCRETE GIRDERS

W42G GIRDER DETAILS 1 OF 2

BRIDGE SHEET NO. SHEET OF SHEETS

JOB NO. 5.6-A3-1 SHEET SR

Fri Jan 04 08:19:49 2008

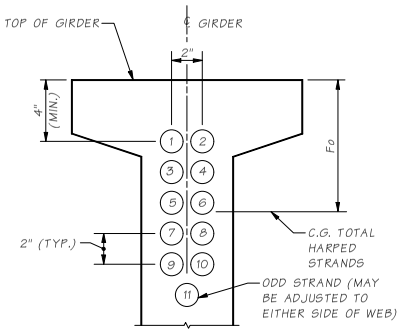

STRAND PATTERN AT GIRDER END

HARPED STRAND LOCATION SEQUENCE SHALL BE AS SHOWN (1), (2) ETC.

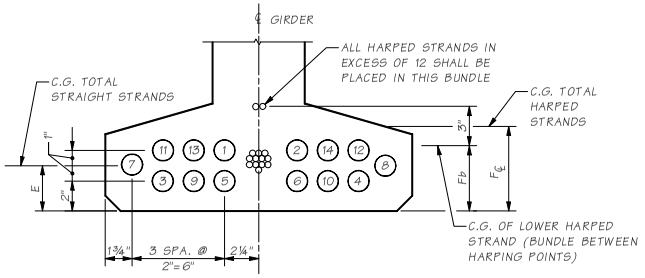

STRAND PATTERN AT ℄ SPAN

STRAIGHT STRAND LOCATION SEQUENCE SHALL BE AS SHOWN (1), (2) ETC.

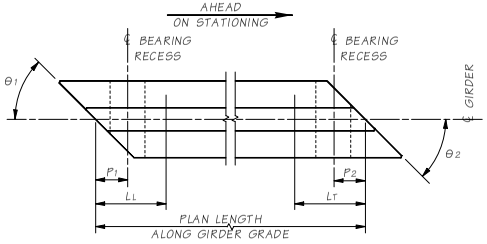

NOTE:
LL AND LT ARE SHIPPING SUPPORT LOCATIONS AT LEADING AND TRAILING ENDS, RESPECTIVELY.

GIRDER SCHEDULE

DIMENSION "A" AT ℄ BEARINGS =											BASED ON GIRDER DEFLECTION = "D" AT TIME OF SLAB PLACEMENT (120 DAYS)														
SPAN	GIRDER	END 1 TYPE	END 2 TYPE	L	LL	LT	θ1 (DEG.)	θ2 (DEG.)	P1	P2	PLAN LENGTH (ALONG GIRDER GRADE)	MIN. CONC. COMP. STRENGTH @ FINAL F'C (KSI)	MIN. CONC. COMP. STRENGTH @ RELEASE F'CI (KSI)	HARPED NO. OF STRANDS	HARPED JACKING FORCE (KIPS)	STRAIGHT NO. OF STRANDS	STRAIGHT JACKING FORCE (KIPS)	LOCATION OF C.G. STRANDS E	LOCATION OF C.G. STRANDS F℄	LOCATION OF C.G. STRANDS Fb	LOCATION OF C.G. STRANDS Fo	C	D @ 40 DAYS	D @ 120 DAYS	Ld
"	"	"	"	"	"	"	"	"	"	"	"	"	"	"	"	"	"	"	"	"	"	"	"	"	"
"	"	"	"	"	"	"	"	"	"	"	"	"	"	"	"	"	"	"	"	"	"	"	"	"	"

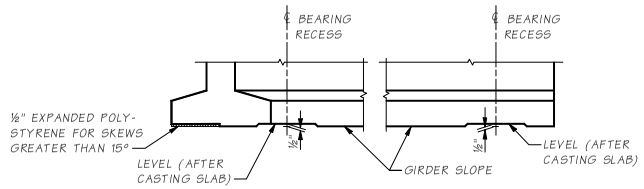

ELEVATION

NOTE:
Dimensions shall be shown in Imperial units to the nearest ⅛th inch.

The number of harped strands should not exceed ½ of the number of straight strands.

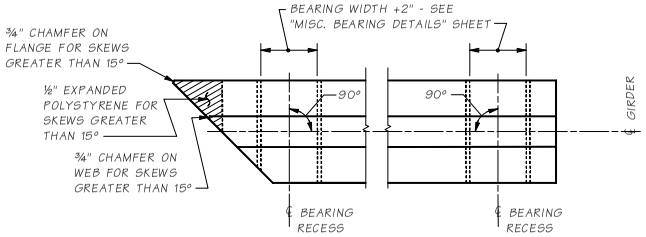

PLAN
BEARING RECESS AND BOTTOM FLANGE SPALL PROTECTION

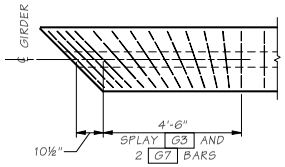

TRANSVERSE REINFORCING SKEWED ENDS

ONLY TRANSVERSE REINF. SHOWN

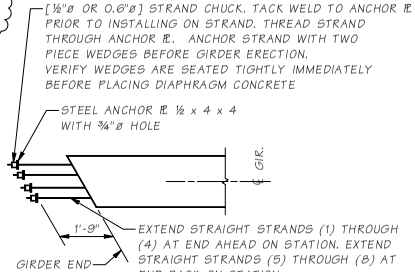

ALTERNATE #1

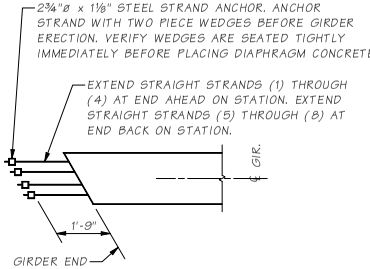

ALTERNATE #2

STRAND EXTENSION DETAIL

Number of extended strands shall be determined by the designer.

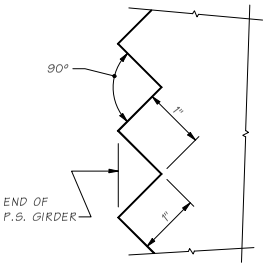

SAWTOOTH DETAILS

SAWTEETH ARE FULL WIDTH - USE SAWTOOTH KEYS FROM BOTTOM OF BOTTOM FLANGE TO BOTTOM OF LOWEST HARPED STRAND AS WELL AS TOP FLANGE ADJACENT TO HARPED STRANDS AS SHOWN IN VIEW B - GIRDER DETAILS 1 OF 2.

SHEET
JOB NO. 5.6-A3-2
SR

Bridge Design Engr.	M:\STANDARDS\Girders\I-Girders\W42G\W42G2.man				REGION NO.	STATE	FED. AID PROJ. NO.	SHEET NO.	TOTAL SHEETS
Supervisor					10	WASH.			
Designed By					JOB NUMBER				
Checked By									
Detailed By									
Bridge Projects Engr.									
Prelim. Plan By									
Architect/Specialist	DATE	REVISION	BY	APP'D					

BRIDGE AND STRUCTURES OFFICE

Washington State Department of Transportation

STANDARD PRESTRESSED CONCRETE GIRDERS

W42G GIRDER DETAILS 2 OF 2

BRIDGE SHEET NO. — SHEET OF SHEETS

Fri Feb 01 11:46:11 2008

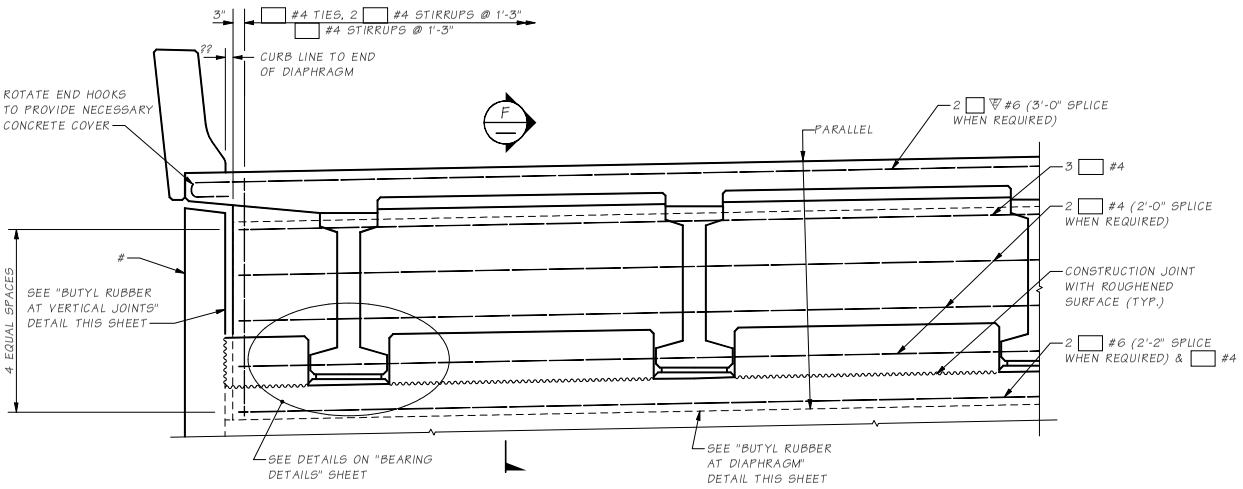

ELEVATION
END DIAPHRAGM

DIMENSIONS ARE ALONG DIAPHRAGM

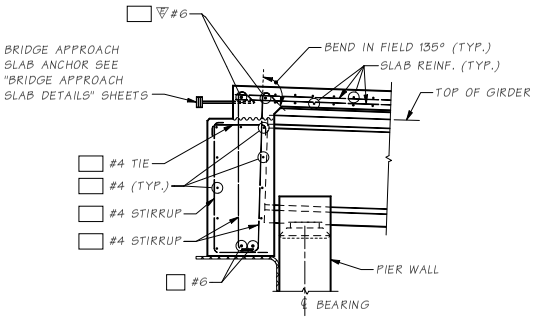

SECTION F

\# If ground line is less than 2'-0" minimum below the bottom of girder at front face of abutment a curtain wall shall be provided.

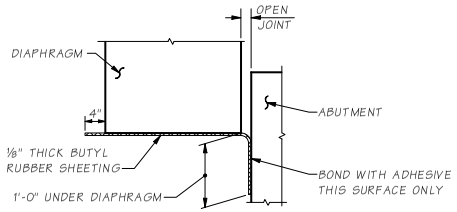

ELEVATION
BUTYL RUBBER
AT DIAPHRAGM

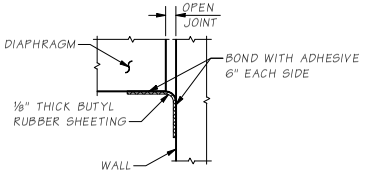

PLAN
BUTYL RUBBER
AT VERTICAL JOINTS

NOTE:
GIRDERS SHALL BE HELD RIGIDLY IN PLACE WHEN DIAPHRAGMS ARE PLACED.

Bridge Length	Open Joint
L ≤ 200'	** = 1.5"
200' < L ≤ 300'	** = 2.0"
300' < L ≤ 400'	** = 2.5"
L > 400'	Special design

* Revise based on size of Open Joint

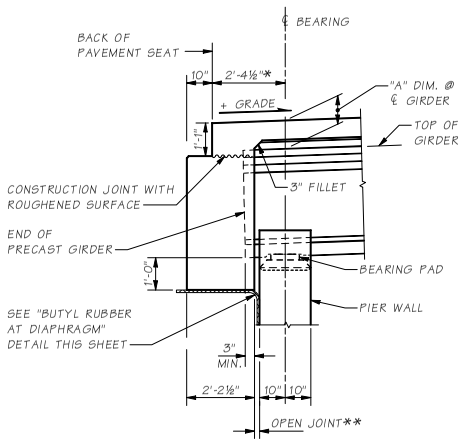

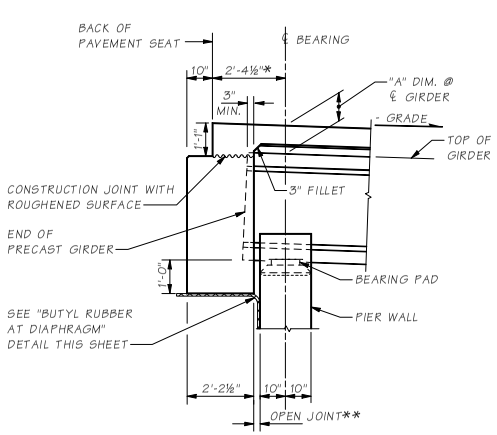

END DIAPHRAGM GEOMETRY

SEE "GIRDER DETAILS" SHEET FOR DIMENSION "A".
ALL LONGITUDINAL DIMENSIONS ARE NORMAL TO SKEW.

Bridge Design Engr.	M:\STANDARDS\Girders\I-Girders\W42G\W42G_END_DIA_ON_GIR.MAN								
Supervisor					REGION NO.	STATE	FED. AID PROJ. NO.	SHEET NO.	TOTAL SHEETS
Designed By					10	WASH.			
Checked By					JOB NUMBER				
Detailed By									
Bridge Projects Engr.									
Prelim Plan By									
Architect/Specialist	DATE	REVISION	BY	APP'D					

BRIDGE AND STRUCTURES OFFICE

Washington State Department of Transportation

STANDARD PRESTRESSED CONCRETE GIRDERS

W42G END DIAPHRAGM ON GIRDER DETAILS

BRIDGE SHEET NO.

SHEET OF SHEETS

SR ____ JOB NO. ____ SHEET ____

5.6-A3-3

Fri Feb 01 11:46:17 2008

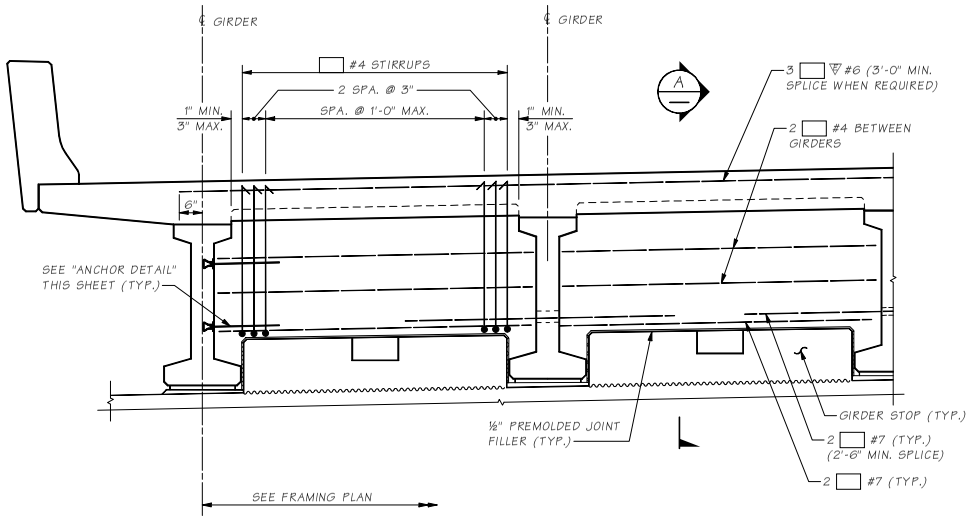

ELEVATION END DIAPHRAGM

DIMENSIONS ARE ALONG DIAPHRAGM

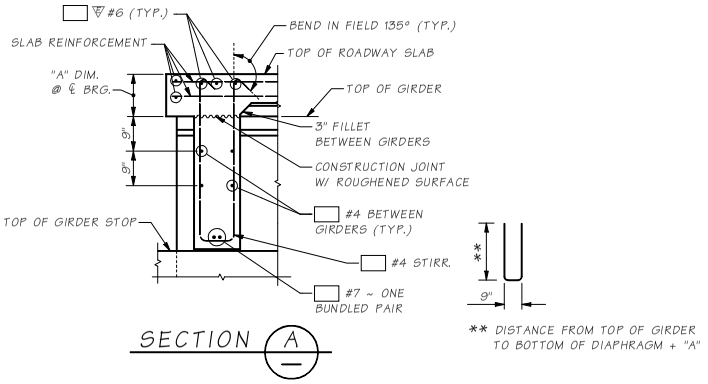

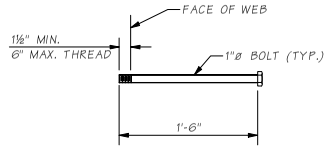

ANCHOR DETAIL

ASTM A-307

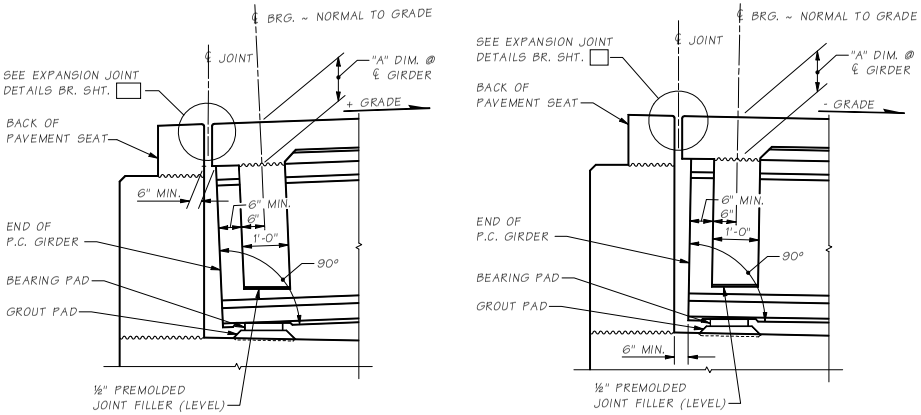

ROADWAY EXPANSION JOINT AT END PIERS

LONGITUDINAL DIMENSIONS ARE NORMAL TO SKEW.
GIRDER STOP NOT SHOWN FOR CLARITY.

NOTE:

GIRDERS SHALL BE HELD RIGIDLY IN PLACE WHEN DIAPHRAGMS ARE PLACED. REINFORCING BAR SHALL BE THREADED THROUGH HOLES IN GIRDERS PRIOR TO PLACING OF EXTERIOR GIRDERS. SEE "GIRDER DETAILS" SHEET FOR DIMENSION "A".

SR | JOB NO. | SHEET
5-6-A3-4

Bridge Design Engr.	M:\STANDARDS\Girders\I-Girders\W42G\W42G_ABUT_PIER_DIAPH_DET.MAN				REGION NO.	STATE	FED. AID PROJ. NO.	SHEET NO.	TOTAL SHEETS	BRIDGE AND STRUCTURES OFFICE
Supervisor					10	WASH.				Washington State Department of Transportation
Designed By					JOB NUMBER					STANDARD PRESTRESSED CONCRETE GIRDERS
Checked By										W42G ABUTMENT TYPE PIER DIAPHRAGM DETAILS
Detailed By										BRIDGE SHEET NO. / SHEET / OF / SHEETS
Bridge Projects Engr.										
Prelim Plan By										
Architect/Specialist	DATE	REVISION	BY	APP'D						

Fri Feb 01 11:46:24 2008

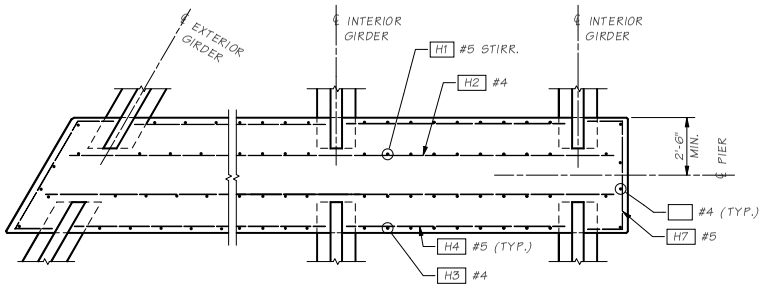

SECTION B

ELEVATION AT TOP OF OAK BLOCK

GIRDER	PIER ?	
	BACK STATION	AHEAD STATION

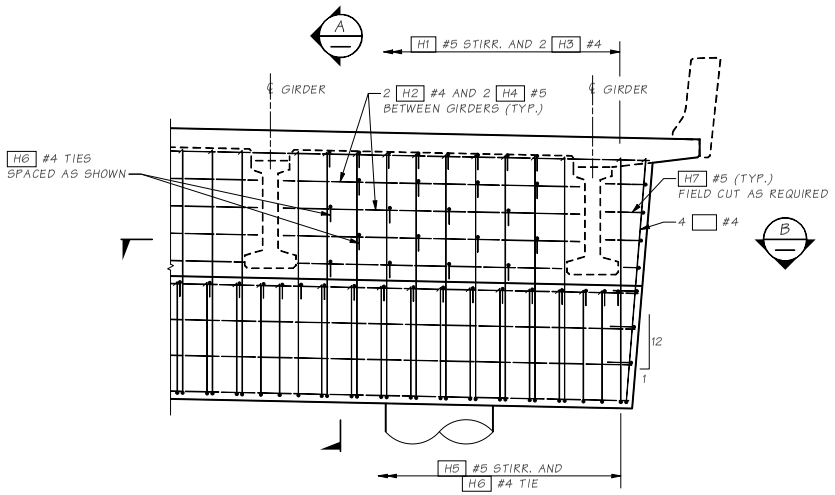

ELEVATION

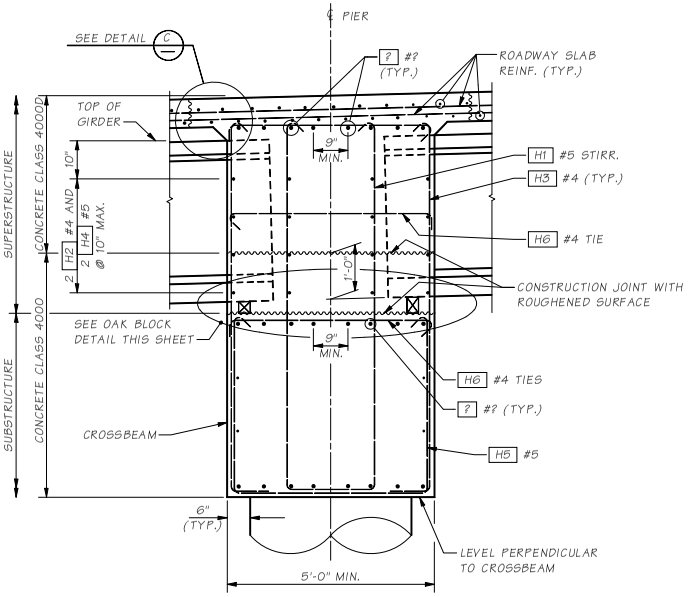

SECTION A

NOTES:
1. LONGITUDINAL DIMENSIONS ARE NORMAL TO SKEW.
2. FOR CONCRETE PLACEMENT PROCEDURE SEE "SUPERSTRUCTURE CONSTRUCTION SEQEUNCE" SHEET.

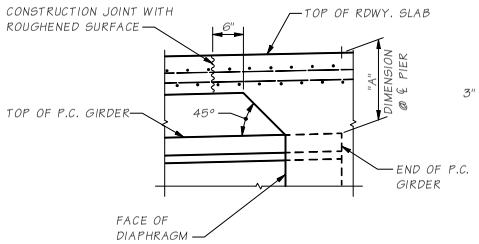

DETAIL C

DIAPHRAGM REINFORCING NOT SHOWN FOR CLARITY

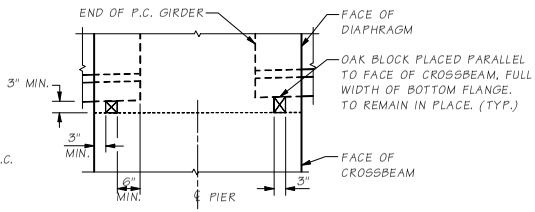

OAK BLOCK DETAIL

LONGITUDINAL DIMENSIONS ARE NORMAL TO SKEW

NOTE TO DESIGNER

The actual bar size and spacing shall be determined by the designer.

Bridge Design Engr.	M:\STANDARDS\Girders\I-Girders\W42G\W42G_FIX_FLUSH_FACE_INTER_PIER_DIAPH_DET.MAN								
Supervisor					REGION NO.	STATE	FED. AID PROJ. NO.	SHEET NO.	TOTAL SHEETS
Designed By					10	WASH.			
Checked By					JOB NUMBER				
Detailed By									
Bridge Projects Engr.									
Prelim Plan By									
Architect/Specialist	DATE	REVISION	BY	APP'D					

BRIDGE AND STRUCTURES OFFICE

Washington State Department of Transportation

STANDARD PRESTRESSED CONCRETE GIRDERS

W42G FIXED FLUSH-FACE DIAPHRAGM AT INTERMEDIATE PIER DETAILS

BRIDGE SHEET NO.

SHEET OF SHEETS

SR JOB NO. SHEET 5.6-A3-5

Fri Feb 01 11:46:29 2008

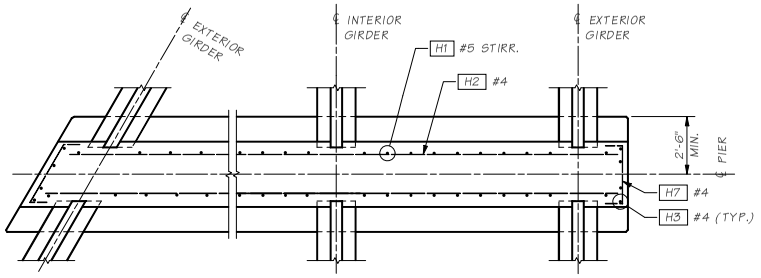

SECTION B

ELEVATION AT TOP OF OAK BLOCK

GIRDER	PIER ?	
	BACK STATION	AHEAD STATION

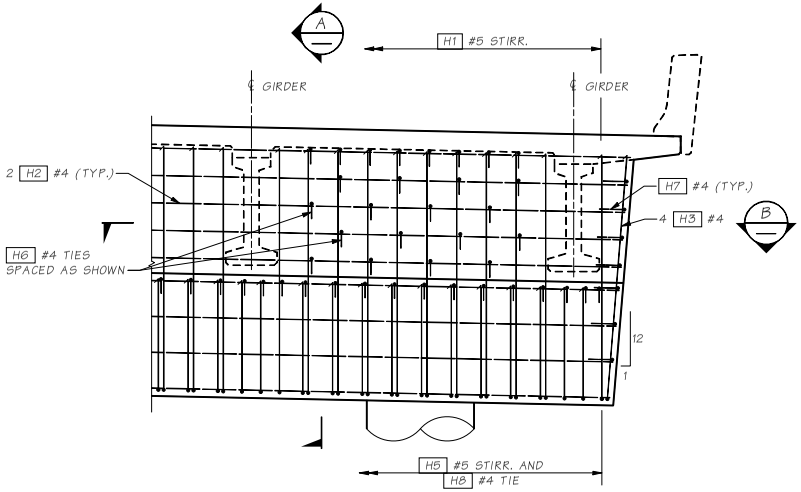

ELEVATION

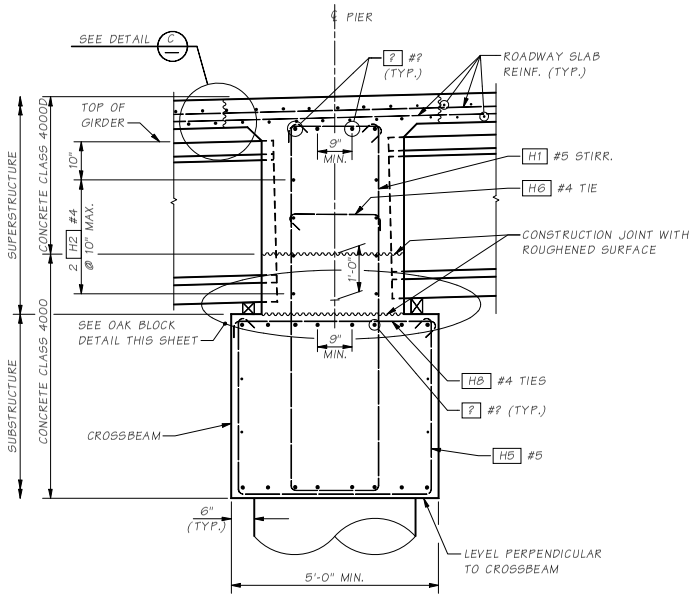

SECTION A

NOTES:
1. LONGITUDINAL DIMENSIONS ARE NORMAL TO SKEW.
2. FOR CONCRETE PLACEMENT PROCEDURE SEE "SUPERSTRUCTURE CONSTRUCTION SEQEUNCE" SHEET.

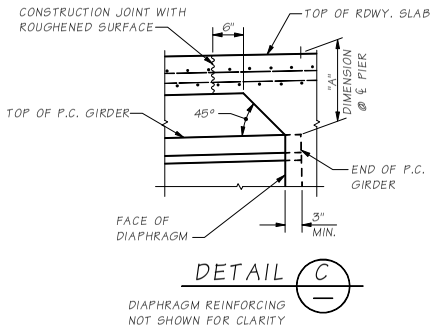

DETAIL C

DIAPHRAGM REINFORCING NOT SHOWN FOR CLARITY

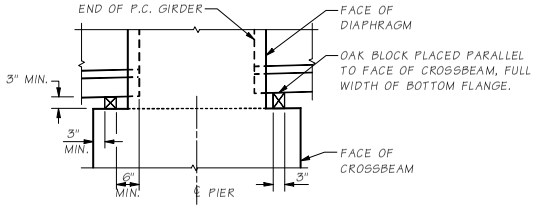

OAK BLOCK DETAIL

LONGITUDINAL DIMENSIONS ARE NORMAL TO SKEW

NOTE TO DESIGNER

The actual bar size and spacing shall be determined by the designer.

Bridge Design Engr.	M:\STANDARDS\Girders\I-Girders\W42G\W42G_FIX_RECESSED_FACE_INTER_PIER_DIAPH_DET.MAN				REGION NO.	STATE	FED. AID PROJ. NO.	SHEET NO.	TOTAL SHEETS
Supervisor					10	WASH			
Designed By					JOB NUMBER				
Checked By									
Detailed By									
Bridge Projects Engr.									
Prelim Plan By									
Architect/Specialist	DATE	REVISION	BY	APP'D					

BRIDGE AND STRUCTURES OFFICE

Washington State Department of Transportation

STANDARD PRESTRESSED CONCRETE GIRDERS

W42G FIXED RECESSED-FACE DIAPHRAGM AT INTERMEDIATE PIER DETAILS

BRIDGE SHEET NO. | SHEET OF SHEETS

SR JOB NO. SHEET

5.6-A3-6

Fri Feb 01 11:46:36 2008

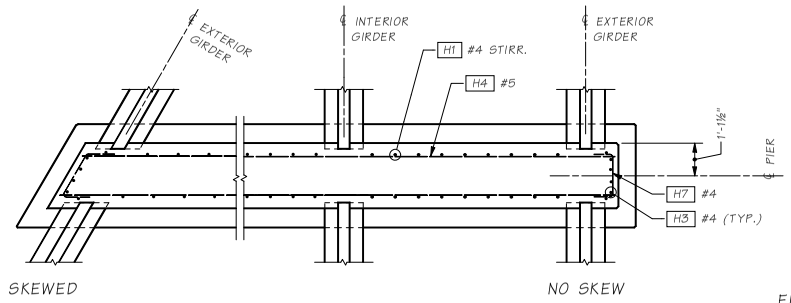

SECTION B

ELEVATION AT TOP OF OAK BLOCK

GIRDER	PIER ?	
	BACK STATION	AHEAD STATION

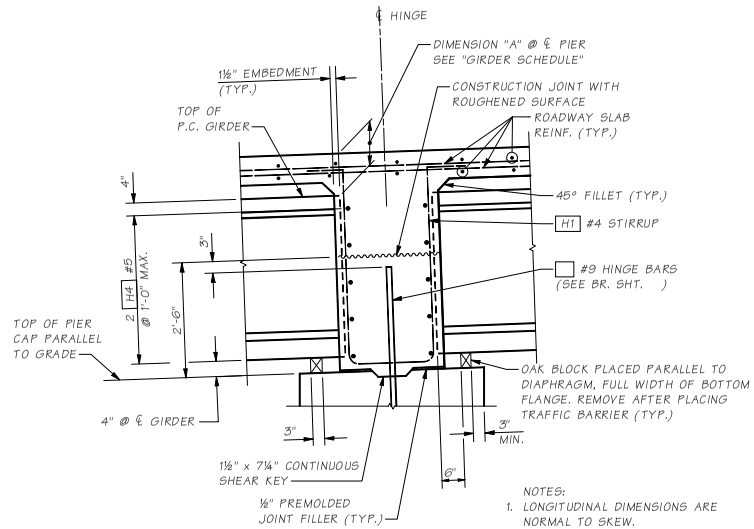

SECTION A

NOTES:
1. LONGITUDINAL DIMENSIONS ARE NORMAL TO SKEW.
2. FOR CONCRETE PLACEMENT PROCEDURE SEE "SUPERSTRUCTURE CONSTRUCTION SEQUENCE" SHEET.
3. EXTENDED STRANDS AND GIRDER REINFORCING NOT SHOWN FOR CLARITY.

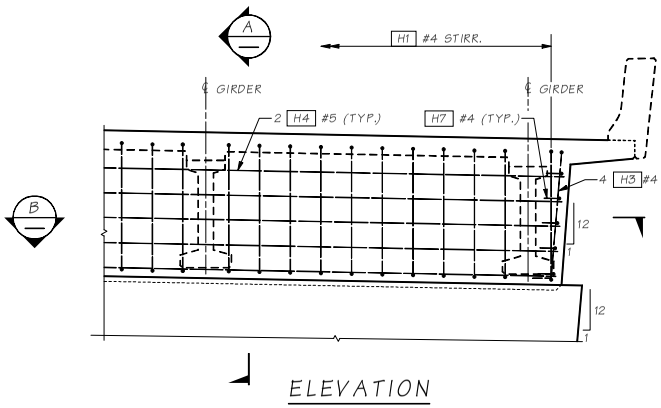

ELEVATION

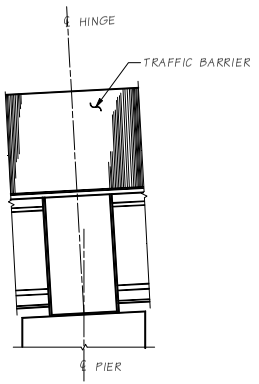

END VIEW
HINGE DIAPHRAGM

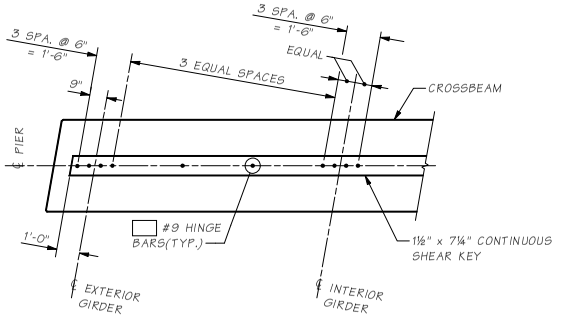

HINGE BAR PLAN

Hinge bar plan is shown for designer. The actual hinge bars detail shall be shown on the crossbeam details sheet.

Bridge Design Engr.	M:\STANDARDS\Girders\I-Girders\W42G\W42G_HINGE_DIAPHRAGM_INTER_PIER_DIAPH_DET.MAN							
Supervisor					REGION NO.	STATE	FED. AID PROJ. NO.	SHEET NO.	TOTAL SHEETS
Designed By					10	WASH.			
Checked By					JOB NUMBER				
Detailed By									
Bridge Projects Engr.									
Prelim. Plan By									
Architect/Specialist	DATE	REVISION	BY	APP'D					

BRIDGE AND STRUCTURES OFFICE

Washington State Department of Transportation

STANDARD PRESTRESSED CONCRETE GIRDERS

W42G HINGE DIAPHRAGM AT INTERMEDIATE PIER DETAILS

BRIDGE SHEET NO.

SHEET OF SHEETS

SR ____ JOB NO. ____ SHEET

5.6-A3-7

Fri Feb 01 11:46:44 2008

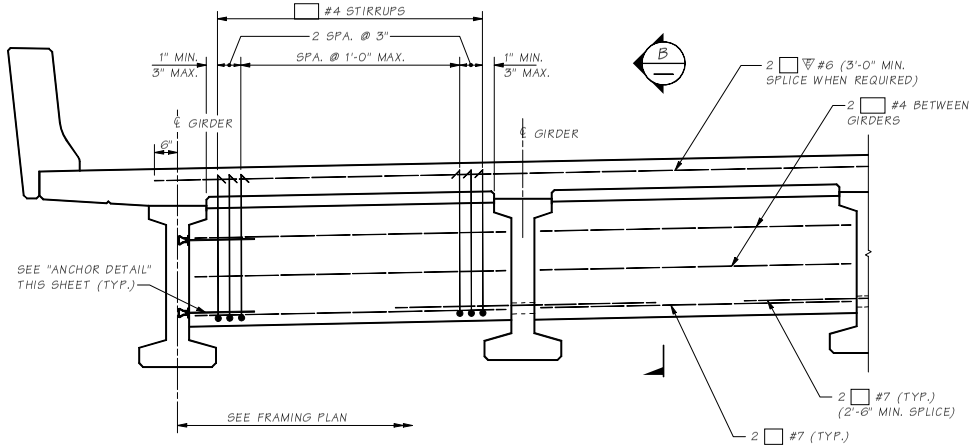

ELEVATION
INTERMEDIATE DIAPHRAGM

DIMENSIONS ARE ALONG DIAPHRAGM

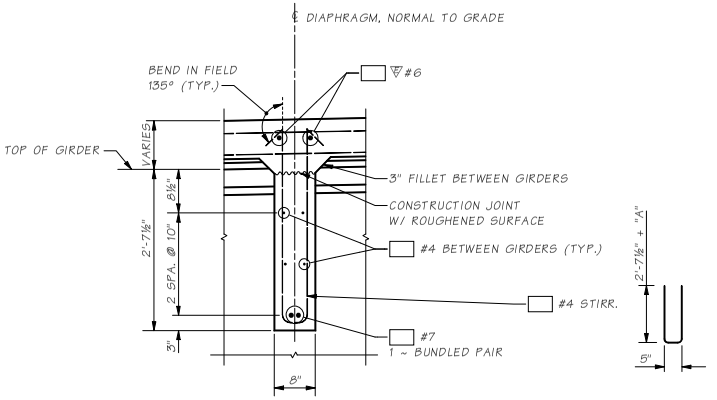

SECTION B

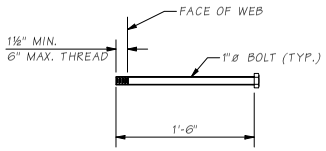

ANCHOR DETAIL

ASTM A-307

NOTE:

GIRDERS SHALL BE HELD RIGIDLY IN PLACE WHEN DIAPHRAGMS ARE PLACED. REINFORCING BAR SHALL BE THREADED THROUGH HOLES IN GIRDERS PRIOR TO PLACING OF EXTERIOR GIRDERS. SEE "GIRDER DETAILS" SHEET FOR DIMENSION "A".

Bridge Design Engr.	M:\STANDARDS\Girders\I-Girders\W42G\W42G_INTER_DIAPHRAGM_DET.MAN				REGION NO.	STATE	FED. AID PROJ. NO.	SHEET NO.	TOTAL SHEETS
Supervisor					10	WASH.			
Designed By									
Checked By					JOB NUMBER				
Detailed By									
Bridge Projects Engr.									
Prelim Plan By									
Architect/Specialist	DATE	REVISION	BY	APP'D					

BRIDGE AND STRUCTURES OFFICE

Washington State Department of Transportation

STANDARD PRESTRESSED CONCRETE GIRDERS

W42G INTERMEDIATE DIAPHRAGM DETAILS

BRIDGE SHEET NO.

SHEET OF SHEETS

SR JOB NO. SHEET

5.6-A3-8

Fri Feb 01 11:46:50 2008

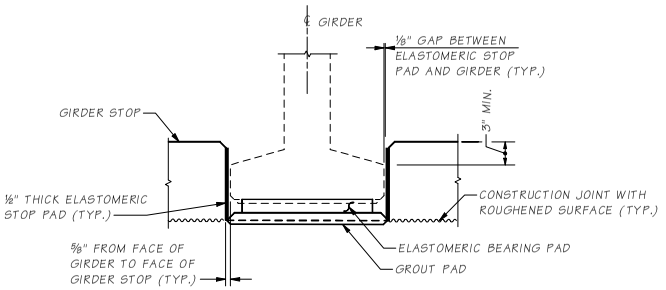

SECTION G

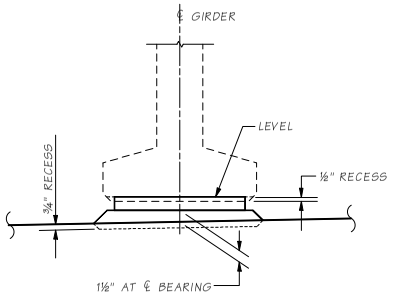

GROUT PAD ELEVATION

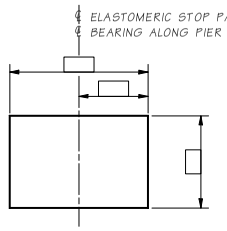

ELASTOMERIC STOP PAD

DUROMETER HARDNESS = 60

NOTE:

1. GIRDER STOPS SHALL BE CONSTRUCTED AFTER GIRDER PLACEMENT.
2. THE ELASTOMERIC STOP PADS SHALL BE CEMENTED TO GIRDER STOPS WITH APPROVED ADHESIVE.

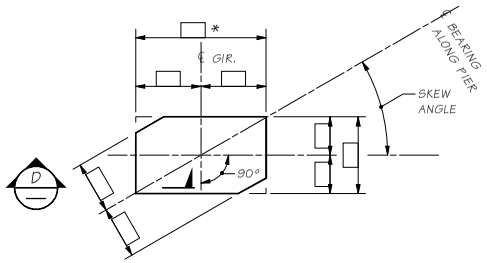

BEARING PAD

LAMINATED ELASTOMERIC BRIDGE PAD ☐ THICK (☐ SHIMS)

Skew angle shown at 30°.

* The edge of the bearing pad shall be set at 1" from the edge of the bottom flange.

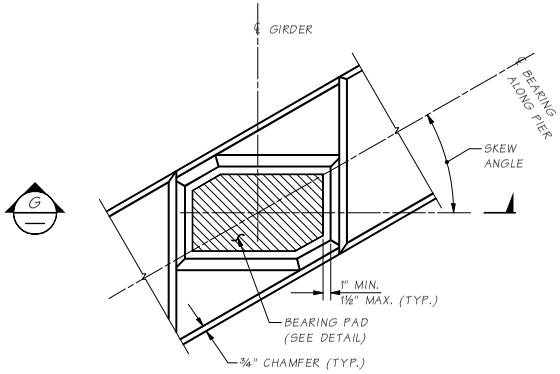

GROUT PAD DETAIL

Skew angle shown at 30°.

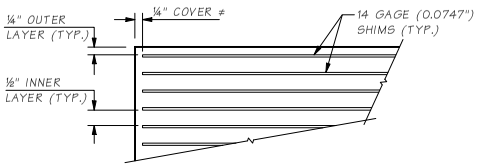

SECTION D

≠ 1/8" for pad thickness ≤ 3"
1/4" for 3" < pad thickness ≤ 7"
1/2" for pad thickness > 7"

BEARING DESIGN TABLE	
SERVICE - I LIMIT STATE	
DEAD LOAD REACTION	KIPS
LIVE LOAD REACTION (W/O IMPACT)	KIPS
UNLOADED HEIGHT	IN.
LOADED HEIGHT (DL)	IN.
DUROMETER HARDNESS	60

Bridge Design Engr.	M:\STANDARDS\Girders\I-Girders\W42G\W42G_MISC_BEARING_DET.MAN				REGION NO.	STATE	FED. AID PROJ. NO.	SHEET NO.	TOTAL SHEETS
Supervisor					10	WASH.			
Designed By					JOB NUMBER				
Checked By									
Detailed By									
Bridge Projects Engr.									
Prelim. Plan By									
Architect/Specialist	DATE	REVISION	BY	APP'D					

BRIDGE AND STRUCTURES OFFICE

Washington State Department of Transportation

STANDARD PRESTRESSED CONCRETE GIRDERS

W42G MISCELLANEOUS BEARING DETAILS

BRIDGE SHEET NO. | SHEET | OF | SHEETS

SR ____ JOB NO. ____ SHEET

5.6-A3-9

Fri Feb 01 11:46:58 2008

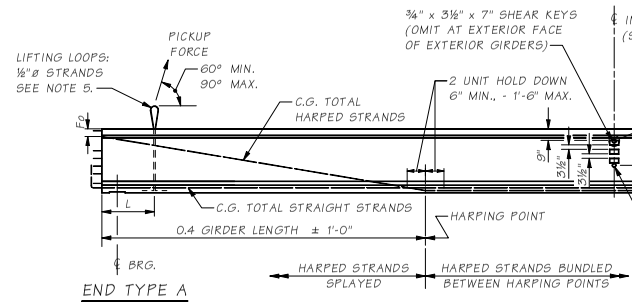

END TYPE A

END TYPE B

GIRDER ELEVATION

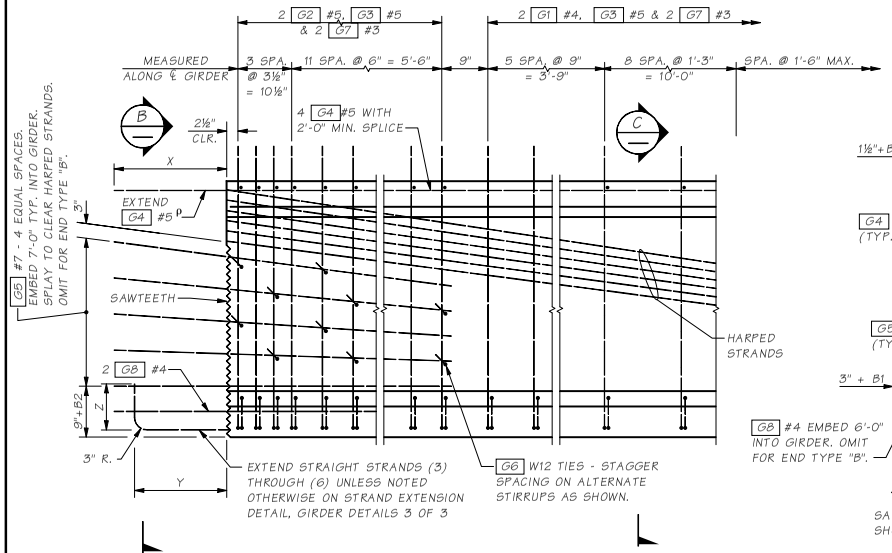

* OMIT HOLES AND PLACE INSERTS ON THE INTERIOR FACE OF EXTERIOR GIRDERS. PLACE HOLES AND INSERTS PARALLEL TO SKEW. INSERTS SHALL BE 1"ø BURKE HI-TENSILE, LANCASTER MALLEABLE, DAYTON-SUPERIOR F-62 FLARED THIN SLAB (1" x 4⅝") FERRULE OR APPROVED EQUAL. (TYP.)

** MAXIMUM SLOPE FOR STRANDS
6 : 1 FOR EACH ½"ø STRAND OR
8 : 1 FOR EACH 0.6"ø STRAND

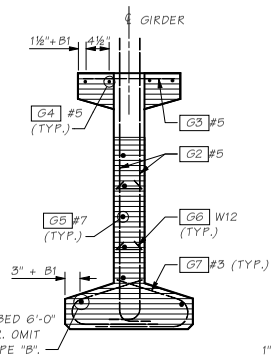

VIEW B

SAWTEETH SHOWN BY HATCHED AREA.

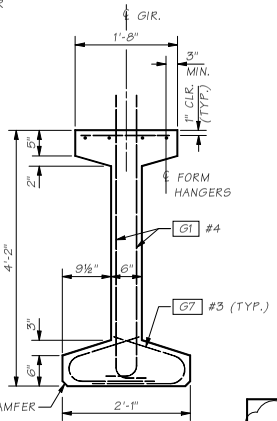

SECTION C

INTERMEDIATE DIAPHRAGM:
1/2 points of span for span lengths less than 40'-0" to 80'-0"
No intermediate diaphragm for span lengths 40'-0" or less.

Diaphragm Type	END TYPE	BEARING RECESS	X	Y	Z	SAWTEETH
End Diaph. on Girder	A	YES	1'-10"	1'-6"	9"	YES
"L" Abutment	B	YES	0"	0"	0"	NO
Hinge Diaph. @ Intermediate Pier	C	NO	1'-10"	1'-6"	9"	YES
Fixed Diaph. @ Intermediate Pier	D	NO	1'-10"	ALT. 1 OR ALT. 2 STRAND EXTENSION		YES

TYPICAL END ELEVATION

END OF TYPE C SHOWN, OTHER END TYPES SIMILAR

P FIELD BENDING REQUIRED TO OBTAIN 1½" CONCRETE COVER AT PAVEMENT SEAT.

(stirrup spacing shall be determined by the designer)

FOR END TYPE "C"

ENDS AHEAD ON STATION
G5 BARS LEFT OF ℄
B1 = 0" (G4 , G8)
B2 = 0" (G5)
ENDS BACK ON STATION
G5 BARS RIGHT OF ℄
B1 = 1½"(G4 , G8)
B2 = 3" (G5)

MARK	LOCATION	SIZE	
G1	GIRDER STIRRUPS	4	
G2	GIRDER END STIRRUPS	5	
G3	GIRDER TOP FLANGE	5	STR.
G4	GIRDER LONGIT. FULL LENGTH	5	STR.
G5	GIRDER END LONGIT.	7	STR.
G6	GIRDER END TIES	W12δ	
G7β	GIRDER BOT. FLANGE TIES	3	
G8	GIRDER END LONGIT.	4	STR.
G9β	GIRDER BOT. FLANGE TIES	3	
G10β	GIRDER BOT. FLANGE TIES	3	

BENDING DIAGRAM (ALL DIMENSIONS ARE OUT TO OUT)
NOTE: FOR DIMENSION "A", SEE "GIRDER SCHEDULE"

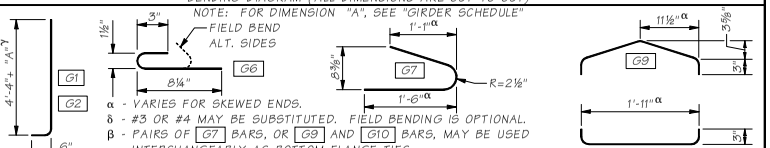

α - VARIES FOR SKEWED ENDS.
δ - #3 OR #4 MAY BE SUBSTITUTED. FIELD BENDING IS OPTIONAL.
β - PAIRS OF G7 BARS, OR G9 AND G10 BARS, MAY BE USED INTERCHANGEABLY AS BOTTOM FLANGE TIES.
γ - SHALL BE CHECKED FOR EFFECT OF VERTICAL CURVE.

NOTES

1. PLAN LENGTH SHALL BE INCREASED AS NECESSARY TO COMPENSATE FOR SHORTENING DUE TO PRESTRESS AND SHRINKAGE.
2. ALL PRETENSIONED STRANDS SHALL BE [½"ø OR 0.6"ø] LOW RELAXATION STRANDS (AASHTO M203 GRADE 270.)
3. FOR END TYPES A, C AND D, CUT ALL STRANDS FLUSH WITH THE GIRDER ENDS AND PAINT WITH AN APPROVED EPOXY RESIN, EXCEPT FOR EXTENDED STRANDS AS SHOWN. FOR END TYPE B CUT ALL STRANDS 1" BELOW CONCRETE SURFACE AND GROUT WITH AN APPROVED EPOXY GROUT.
4. THE TOP SURFACE OF THE GIRDER FLANGE SHALL BE ROUGHENED IN ACCORDANCE WITH SECTION 6-02.3(25)H OF THE STANDARD SPECIFICATIONS.
5. LIFTING EMBEDMENTS SHALL BE INSTALLED IN ACCORDANCE WITH SECTION 6-02.3(25)L OF THE STANDARD SPECIFICATIONS.
6. CAUTION SHALL BE EXERCISED IN HANDLING AND PLACING GIRDERS. ALL GIRDERS SHALL BE CHECKED BY THE CONTRACTOR TO ENSURE THAT THEY ARE BRACED ADEQUATELY TO PREVENT TIPPING AND TO CONTROL LATERAL BENDING DURING SHIPPING. ONCE ERECTED, ALL GIRDERS SHALL BE BRACED LATERALLY TO PREVENT TIPPING UNTIL THE DIAPHRAGMS ARE CAST AND CURED.
7. FORMS FOR BEARING PAD RECESSES SHALL BE CONSTRUCTED AND FASTENED IN SUCH A MANNER AS TO NOT CAUSE DAMAGE TO THE GIRDER DURING THE STRAND RELEASE OPERATION.

Bridge Design Engr.	M:\STANDARDS\Girders\I-Girders\W50G\W50GI.man								
Supervisor					REGION NO.	STATE	FED. AID PROJ. NO.	SHEET NO.	TOTAL SHEETS
Designed By					10	WASH			
Checked By					JOB NUMBER				
Detailed By									
Bridge Projects Engr.									
Prelim. Plan By									
Architect/Specialist	DATE	REVISION	BY	APP'D					

BRIDGE AND STRUCTURES OFFICE

Washington State Department of Transportation

STANDARD PRESTRESSED CONCRETE GIRDERS

W50G GIRDER DETAILS 1 OF 2

BRIDGE SHEET NO. | SHEET | OF | SHEETS

SR | JOB NO. | SHEET

5.6-A4-1

Fri Feb 01 12:53:16 2008

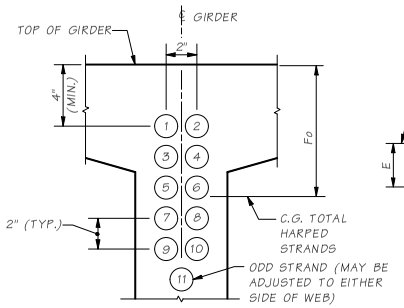

STRAND PATTERN AT GIRDER END

HARPED STRAND LOCATION SEQUENCE SHALL BE AS SHOWN (1), (2) ETC.

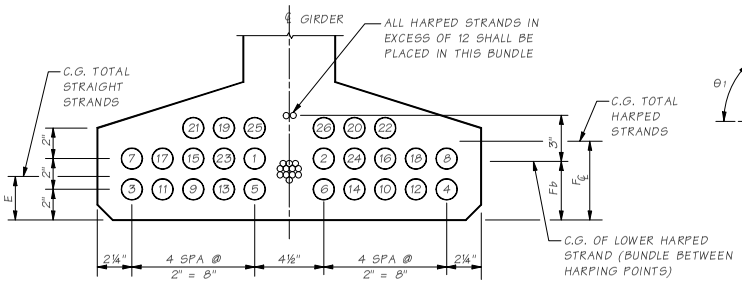

STRAND PATTERN AT ℄ SPAN

STRAIGHT STRAND LOCATION SEQUENCE SHALL BE AS SHOWN (1), (2) ETC.

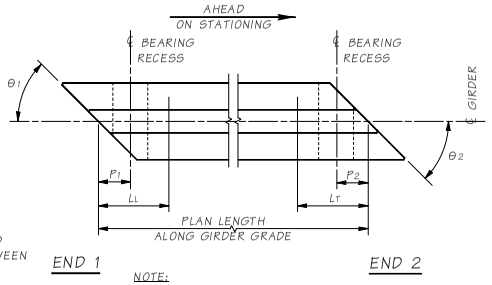

NOTE:
LL AND LT ARE SHIPPING SUPPORT LOCATIONS AT LEADING AND TRAILING ENDS, RESPECTIVELY.

GIRDER SCHEDULE

DIMENSION "A" AT ℄ BEARINGS =							BASED ON GIRDER DEFLECTION = "D" AT TIME OF SLAB PLACEMENT (120 DAYS)																		
SPAN	GIRDER	END 1 TYPE	END 2 TYPE	L	LL	LT	θ1 (DEG.)	θ2 (DEG.)	P1	P2	PLAN LENGTH (ALONG GIRDER GRADE)	MIN. CONC. COMP. STRENGTH @ FINAL F'C (KSI)	MIN. CONC. COMP. STRENGTH @ RELEASE F'CI (KSI)	HARPED NO. OF STRANDS	HARPED JACKING FORCE (KIPS)	STRAIGHT NO. OF STRANDS	STRAIGHT JACKING FORCE (KIPS)	LOCATION OF C.G. STRANDS E	LOCATION OF C.G. STRANDS F℄	LOCATION OF C.G. STRANDS Fb	LOCATION OF C.G. STRANDS Fo	C	D @ 40 DAYS	D @ 120 DAYS	Ld
"	"	"	"	"	"	"	"	"	"	"	"	"	"	"	"	"	"	"	"	"	"	"	"	"	"	"
"	"	"	"	"	"	"	"	"	"	"	"	"	"	"	"	"	"	"	"	"	"	"	"	"	"	"

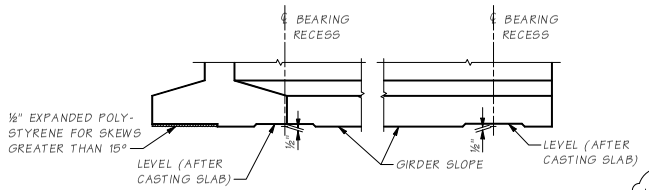

ELEVATION

NOTE:
Dimensions shall be shown in Imperial units to the nearest 1/8th inch.

The number of harped strands should not exceed ½ of the number of straight strands.

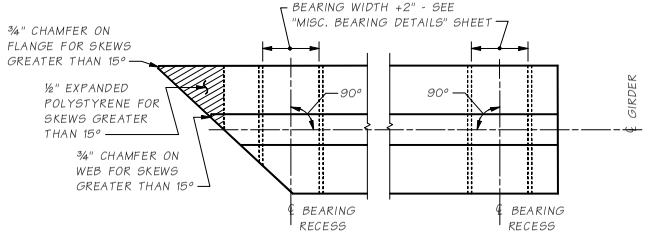

PLAN
BEARING RECESS AND BOTTOM FLANGE SPALL PROTECTION

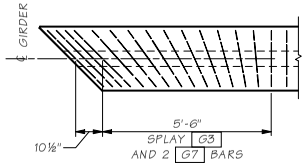

TRANSVERSE REINFORCING SKEWED ENDS

ONLY TRANSVERSE REINF. SHOWN

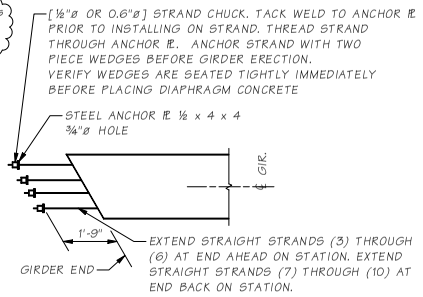

ALTERNATE #1

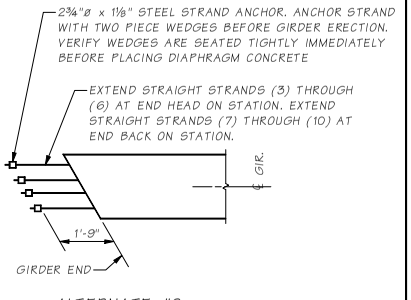

ALTERNATE #2

STRAND EXTENSION DETAIL

Number of extended strands shall be determined by the designer.

SAWTOOTH DETAILS

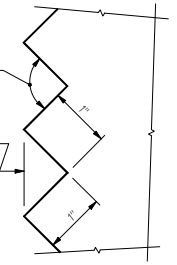

SAWTEETH ARE FULL WIDTH - USE SAWTOOTH KEYS FROM BOTTOM OF BOTTOM FLANGE TO BOTTOM OF LOWEST HARPED STRAND AS WELL AS TOP FLANGE ADJACENT TO HARPED STRANDS AS SHOWN IN VIEW B - GIRDER DETAILS 1 OF 2

Bridge Design Engr.	M:\STANDARDS\Girders\I-Girders\W50G\W50G2.man									
Supervisor										
Designed By										
Checked By										
Detailed By										
Bridge Projects Engr.										
Prelim. Plan By										
Architect/Specialist	DATE	REVISION	BY	APP'D						

REGION NO.	STATE	FED. AID PROJ. NO.	SHEET NO.	TOTAL SHEETS
10	WASH.			
JOB NUMBER				

BRIDGE AND STRUCTURES OFFICE

Washington State Department of Transportation

STANDARD PRESTRESSED CONCRETE GIRDERS

W50G GIRDER DETAILS 2 OF 2

BRIDGE SHEET NO.

SHEET OF SHEETS

SR JOB NO. SHEET

5.6-A4-2

Fri Feb 01 12:53:21 2008

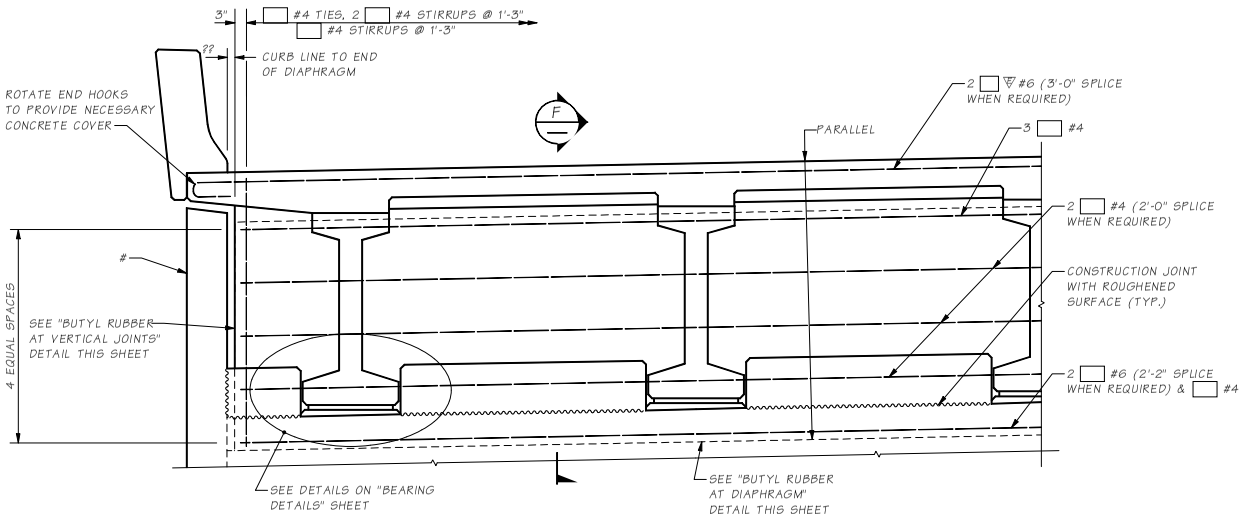

ELEVATION
END DIAPHRAGM

DIMENSIONS ARE ALONG DIAPHRAGM

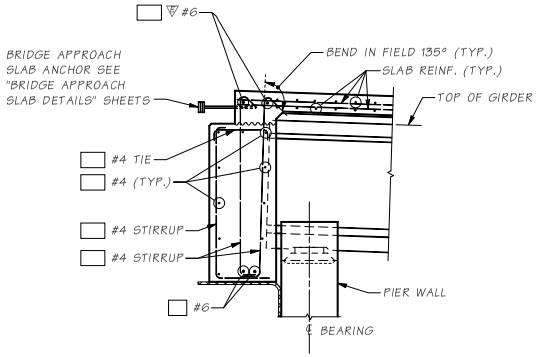

SECTION F

\# If ground line is less than 2'-0" minimum below the bottom of girder at front face of abutment a curtain wall shall be provided.

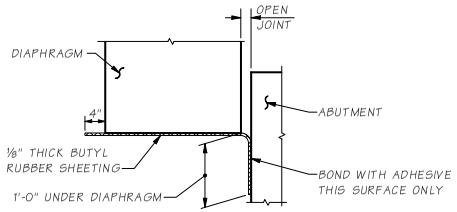

ELEVATION
BUTYL RUBBER
AT DIAPHRAGM

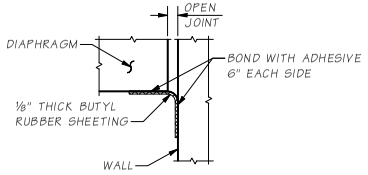

PLAN
BUTYL RUBBER
AT VERTICAL JOINTS

Bridge length	Open Joint
L ≤ 200'	** = 1.5"
200' < L ≤ 300'	** = 2.0"
300' < L ≤ 400'	** = 2.5"
L > 400'	Special design

* Revise based on size of Open Joint

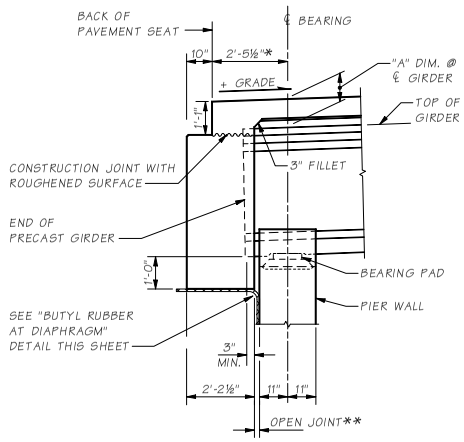

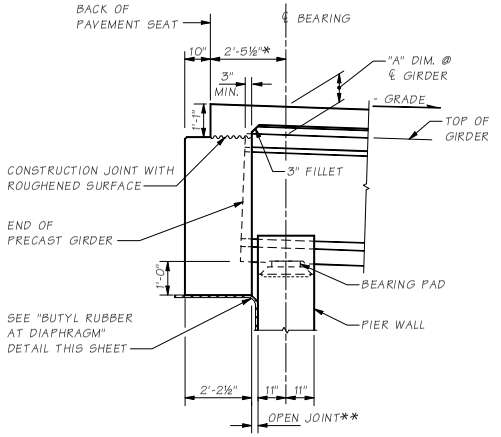

END DIAPHRAGM GEOMETRY

SEE "GIRDER DETAILS" SHEET FOR DIMENSION "A".
ALL LONGITUDINAL DIMENSIONS ARE NORMAL TO SKEW.

NOTE:
GIRDERS SHALL BE HELD RIGIDLY IN PLACE WHEN DIAPHRAGMS ARE PLACED.

Bridge Design Engr.	M:\STANDARDS\Girders\I-Girders\W50G\W50G_END_DIA_ON_GIR.MAN				REGION NO.	STATE	FED. AID PROJ. NO.	SHEET NO.	TOTAL SHEETS
Supervisor					10	WASH.			
Designed By					JOB NUMBER				
Checked By									
Detailed By									
Bridge Projects Engr.									
Prelim. Plan By									
Architect/Specialist	DATE	REVISION	BY	APP'D					

BRIDGE AND STRUCTURES OFFICE

Washington State Department of Transportation

STANDARD PRESTRESSED CONCRETE GIRDERS

W50G END DIAPHRAGM ON GIRDER DETAILS

BRIDGE SHEET NO. | SHEET | OF | SHEETS

SR | JOB NO. | SHEET

5.6-A4-3

Fri Feb 01 12:53:27 2008

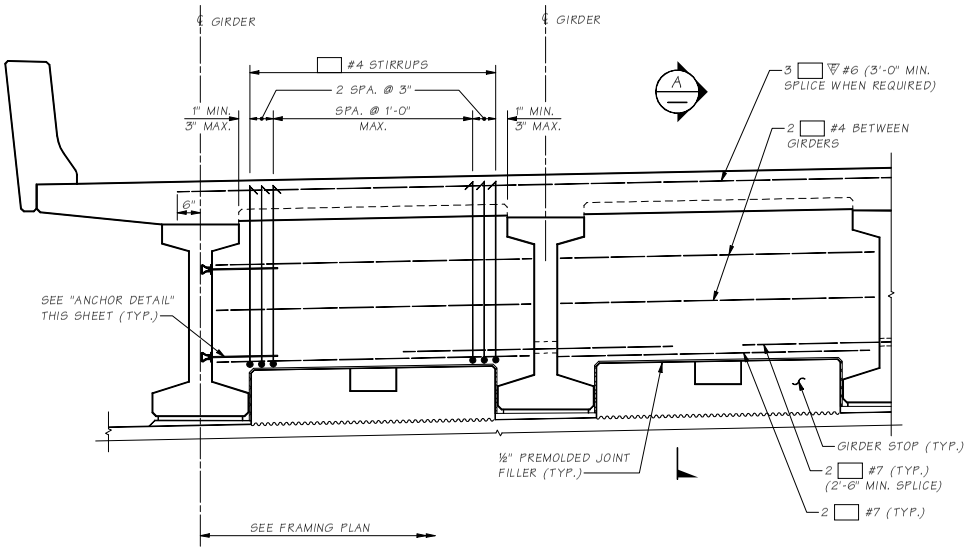

ELEVATION END DIAPHRAGM

DIMENSIONS ARE ALONG DIAPHRAGM

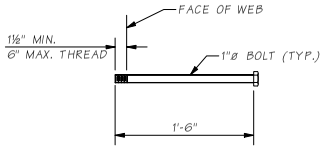

ANCHOR DETAIL

ASTM A-307

NOTE:

GIRDERS SHALL BE HELD RIGIDLY IN PLACE WHEN DIAPHRAGMS ARE PLACED. REINFORCING BAR SHALL BE THREADED THROUGH HOLES IN GIRDERS PRIOR TO PLACING OF EXTERIOR GIRDERS. SEE "GIRDER DETAILS" SHEET FOR DIMENSION "A".

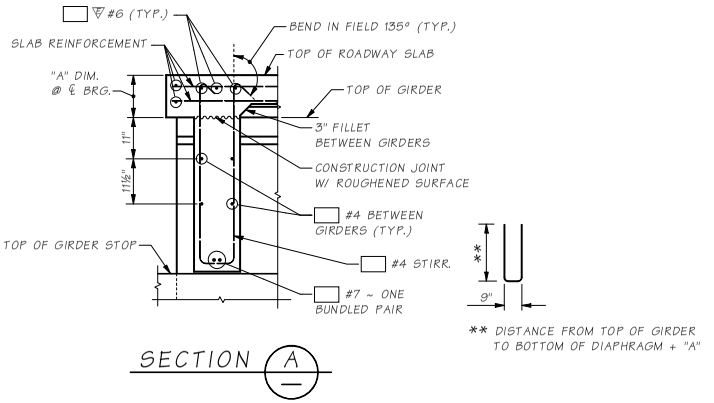

SECTION A

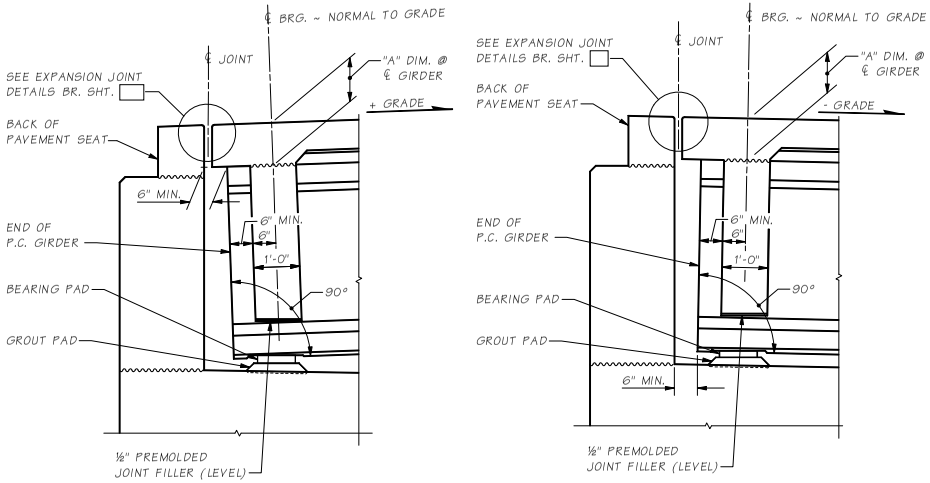

ROADWAY EXPANSION JOINT AT END PIERS

LONGITUDINAL DIMENSIONS ARE NORMAL TO SKEW.
GIRDER STOP NOT SHOWN FOR CLARITY.

Bridge Design Engr.	M:\STANDARDS\Girders\I-Girders\W50G\W50G_ABUT_PIER_DIAPH_DET.MAN				REGION NO.	STATE	FED. AID PROJ. NO.	SHEET NO.	TOTAL SHEETS
Supervisor					10	WASH			
Designed By									
Checked By					JOB NUMBER				
Detailed By									
Bridge Projects Engr.									
Prelim Plan By									
Architect/Specialist	DATE	REVISION	BY	APP'D					

BRIDGE AND STRUCTURES OFFICE

Washington State Department of Transportation

STANDARD PRESTRESSED CONCRETE GIRDERS

W50G ABUTMENT TYPE PIER DIAPHRAGM DETAILS

BRIDGE SHEET NO. | SHEET | OF | SHEETS

SR | JOB NO. | SHEET

5.6-A4-4

Fri Feb 01 12:53:33 2008

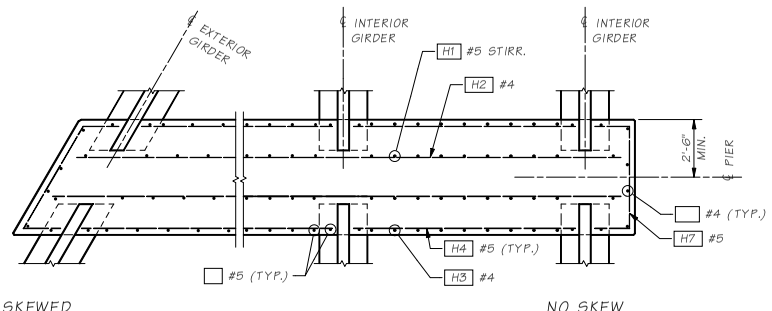

SECTION B

ELEVATION AT TOP OF OAK BLOCK

GIRDER	PIER ?	
	BACK STATION	AHEAD STATION

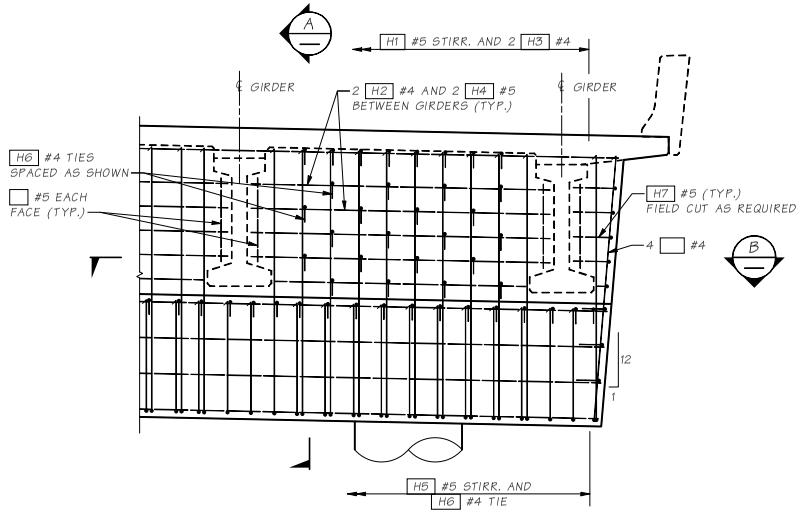

ELEVATION

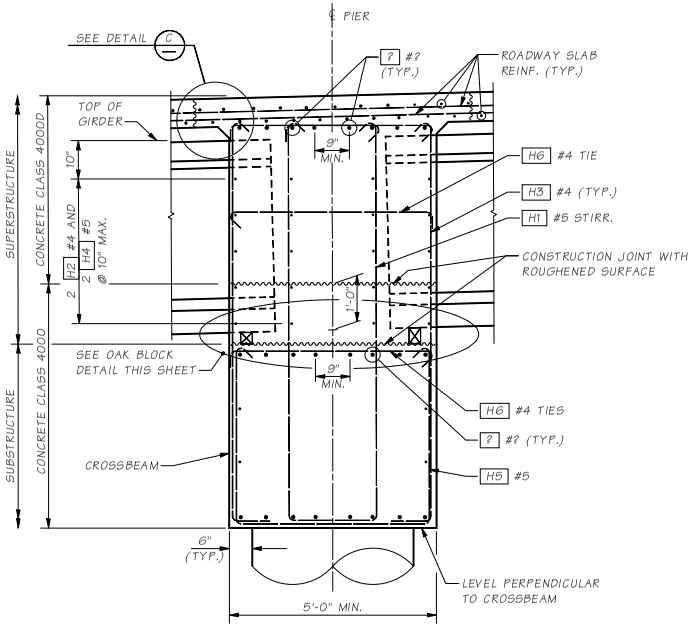

SECTION A

NOTES:
1. LONGITUDINAL DIMENSIONS ARE NORMAL TO SKEW.
2. FOR CONCRETE PLACEMENT PROCEDURE SEE "SUPERSTRUCTURE CONSTRUCTION SEQEUNCE" SHEET.

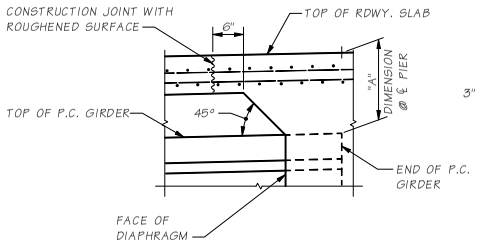

DETAIL C

DIAPHRAGM REINFORCING NOT SHOWN FOR CLARITY

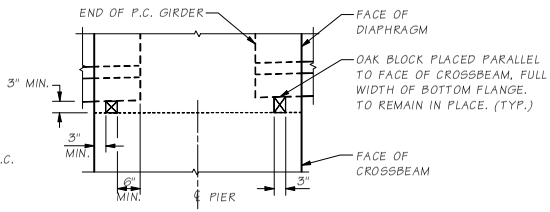

OAK BLOCK DETAIL

LONGITUDINAL DIMENSIONS ARE NORMAL TO SKEW

NOTE TO DESIGNER

The actual bar size and spacing shall be determined by the designer.

Bridge Design Engr.	M:\STANDARDS\Girders\I-Girders\W50G\W50G_FIX_FLUSH_FACE_INTER_PIER_DIAPH_DET.MAN				REGION NO.	STATE	FED. AID PROJ. NO.	SHEET NO.	TOTAL SHEETS
Supervisor					10	WASH			
Designed By					JOB NUMBER				
Checked By									
Detailed By									
Bridge Projects Engr.									
Prelim Plan By									
Architect/Specialist	DATE	REVISION	BY	APP'D					

BRIDGE AND STRUCTURES OFFICE

Washington State Department of Transportation

STANDARD PRESTRESSED CONCRETE GIRDERS

W50G FIXED FLUSH-FACE DIAPHRAGM AT INTERMEDIATE PIER DETAILS

BRIDGE SHEET NO. — SHEET — OF — SHEETS

SR — JOB NO. — SHEET

5.6-A4-5

Fri Feb 01 12:53:38 2008

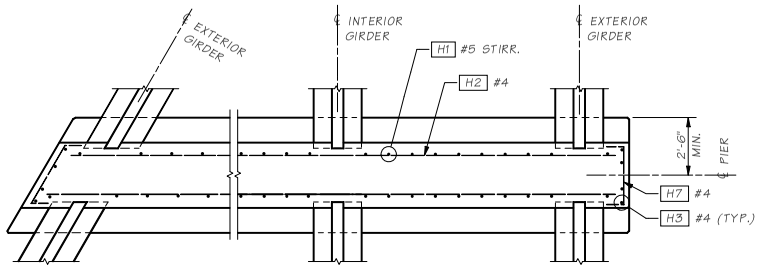

SECTION B

ELEVATION AT TOP OF OAK BLOCK

GIRDER	PIER ?	
	BACK STATION	AHEAD STATION

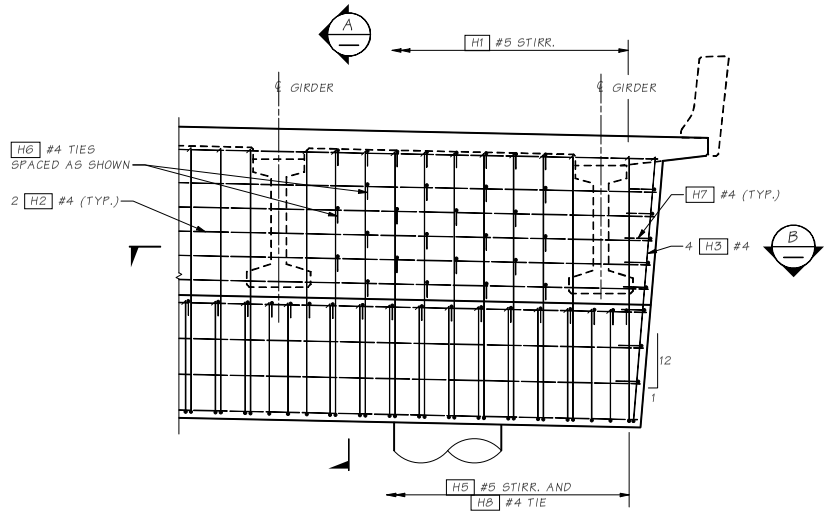

ELEVATION

NOTE TO DESIGNER

The actual bar size and spacing shall be determined by the designer.

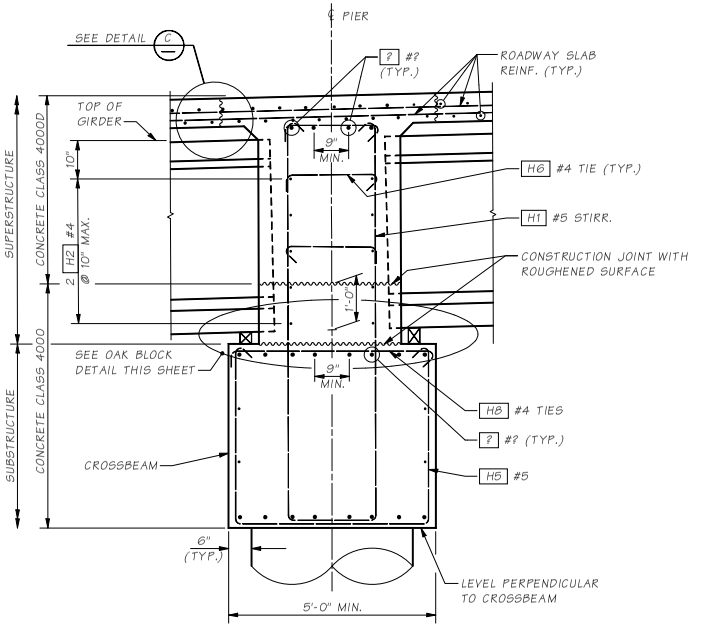

SECTION A

NOTES:
1. LONGITUDINAL DIMENSIONS ARE NORMAL TO SKEW.
2. FOR CONCRETE PLACEMENT PROCEDURE SEE "SUPERSTRUCTURE CONSTRUCTION SEQEUNCE" SHEET.

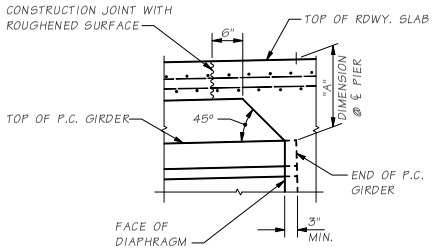

DETAIL C

DIAPHRAGM REINFORCING NOT SHOWN FOR CLARITY

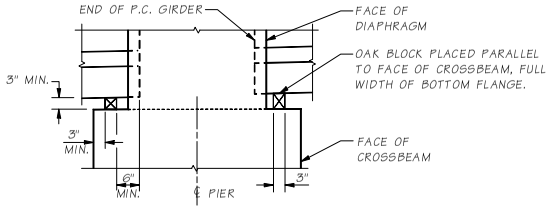

OAK BLOCK DETAIL

LONGITUDINAL DIMENSIONS ARE NORMAL TO SKEW

Bridge Design Engr.	M:\STANDARDS\Girders\I-Girders\W50G\W50G_FIX_RECESSED_FACE_INTER_PIER_DIAPH_DET.MAN				REGION NO.	STATE	FED. AID PROJ. NO.	SHEET NO.	TOTAL SHEETS	BRIDGE DESIGN ENGR.
Supervisor					10	WASH.				BRIDGE AND STRUCTURES OFFICE
Designed By					JOB NUMBER					Washington State Department of Transportation
Checked By										STANDARD PRESTRESSED CONCRETE GIRDERS
Detailed By										W50G FIXED RECESSED-FACE DIAPHRAGM AT INTERMEDIATE PIER DETAILS
Bridge Projects Engr.										
Prelim. Plan By										
Architect/Specialist	DATE	REVISION	BY	APP'D						

Fri Feb 01 12:53:45 2008

SHEET
JOB NO.
SR

5.6-A4-6

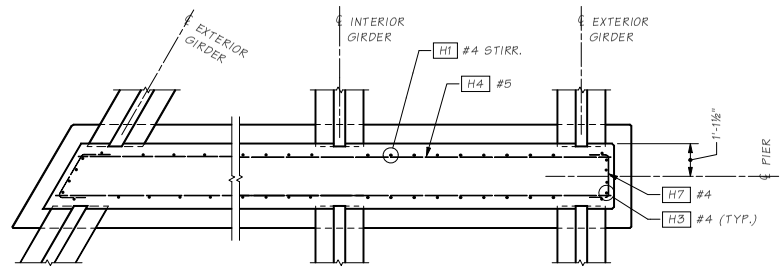

SECTION B

ELEVATION AT TOP OF OAK BLOCK

GIRDER	PIER ?	
	BACK STATION	AHEAD STATION

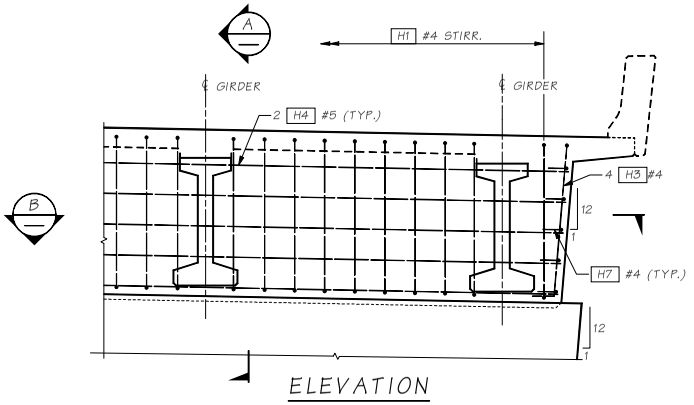

ELEVATION

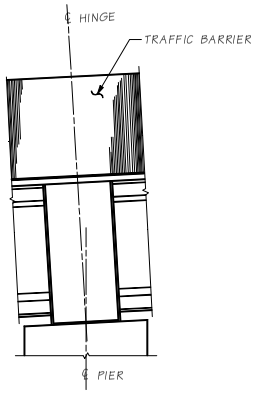

END VIEW
HINGE DIAPHRAGM

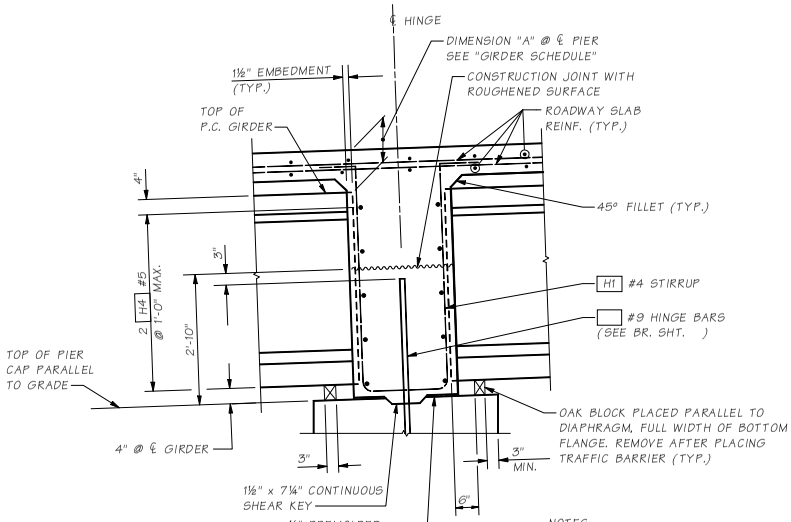

SECTION A

NOTES:
1. LONGITUDINAL DIMENSIONS ARE NORMAL TO SKEW.
2. FOR CONCRETE PLACEMENT PROCEDURE SEE "SUPERSTRUCTURE CONSTRUCTION SEQEUNCE" SHEET.
3. EXTENDED STRANDS AND GIRDER REINFORCING NOT SHOWN FOR CLARITY.

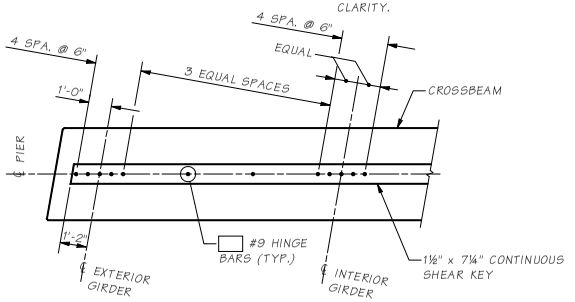

HINGE BAR PLAN

Hinge bar plan is shown for designer. The actual hinge bars detail shall be shown on the crossbeam details sheet.

Bridge Design Engr.	M:\STANDARDS\Girders\I-Girders\W50G\W50G_HINGE_DIAPHRAGM_INTER_PIER_DIAPH_DET.MXN				REGION NO.	STATE	FED. AID PROJ. NO.	SHEET NO.	TOTAL SHEETS	BRIDGE SHEET NO.
Supervisor					10	WASH.				
Designed By					JOB NUMBER					SHEET
Checked By										OF
Detailed By										SHEETS
Bridge Projects Engr.										
Prelim Plan By										
Architect/Specialist	DATE	REVISION	BY	APPD						

BRIDGE AND STRUCTURES OFFICE

Washington State Department of Transportation

STANDARD PRESTRESSED CONCRETE GIRDERS

W50G HINGE DIAPHRAGM AT INTERMEDIATE PIER DETAILS

SR. ____ JOB NO. ____ SHEET ____

5.6-A4-7

Fri Feb 01 12:53:51 2008

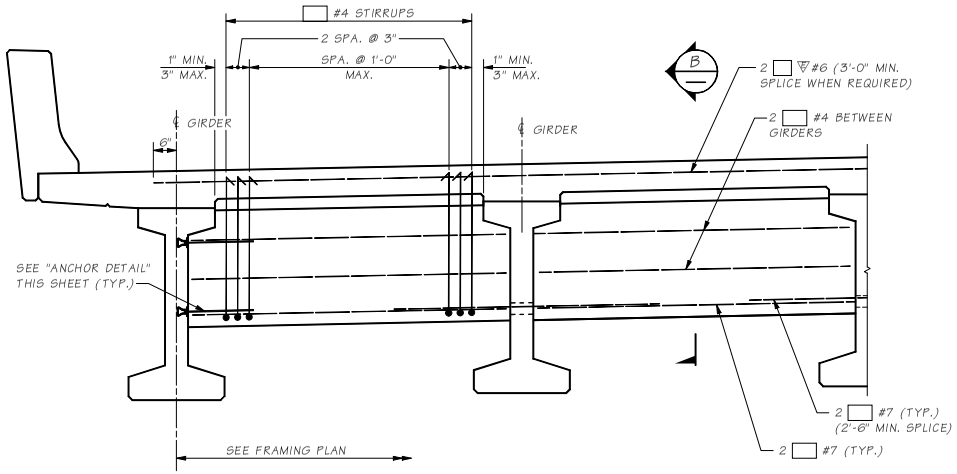

ELEVATION
INTERMEDIATE DIAPHRAGM

DIMENSIONS ARE ALONG DIAPHRAGM

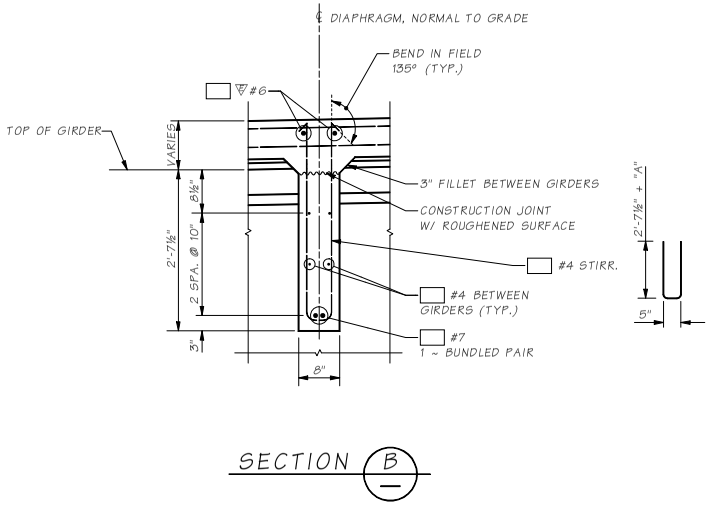

SECTION B

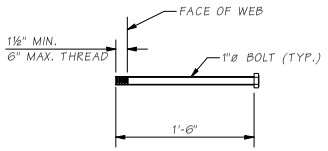

ANCHOR DETAIL

ASTM A-307

NOTE:

GIRDERS SHALL BE HELD RIGIDLY IN PLACE WHEN DIAPHRAGMS ARE PLACED. REINFORCING BAR SHALL BE THREADED THROUGH HOLES IN GIRDERS PRIOR TO PLACING OF EXTERIOR GIRDERS. SEE "GIRDER DETAILS" SHEET FOR DIMENSION "A".

Bridge Design Engr.	M:\STANDARDS\Girders\I-Girders\W50G\W50G_INTER_DIAPHRAGM_DET.MAN				REGION NO.	STATE	FED. AID PROJ. NO.	SHEET NO.	TOTAL SHEETS
Supervisor					10	WASH			
Designed By									
Checked By					JOB NUMBER				
Detailed By									
Bridge Projects Engr.									
Prelim Plan By									
Architect/Specialist	DATE	REVISION	BY	APP'D					

BRIDGE AND STRUCTURES OFFICE

Washington State Department of Transportation

STANDARD PRESTRESSED CONCRETE GIRDERS

W50G INTERMEDIATE DIAPHRAGM DETAILS

BRIDGE SHEET NO.

SHEET OF SHEETS

SR JOB NO. SHEET

5.6-A4-8

Fri Feb 01 12:53:59 2008

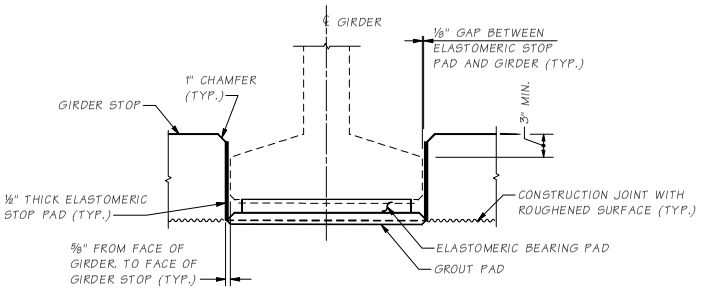

SECTION G

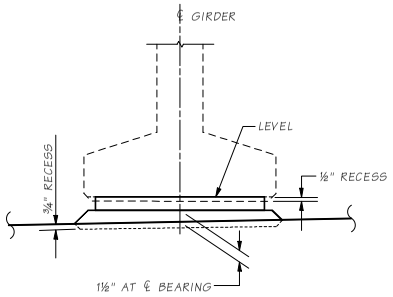

GROUT PAD ELEVATION

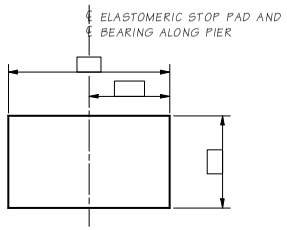

ELASTOMERIC STOP PAD

DUROMETER HARDNESS = 60

NOTE:

1. GIRDER STOPS SHALL BE CONSTRUCTED AFTER GIRDER PLACEMENT.
2. THE ELASTOMERIC STOP PADS SHALL BE CEMENTED TO GIRDER STOPS WITH APPROVED ADHESIVE.

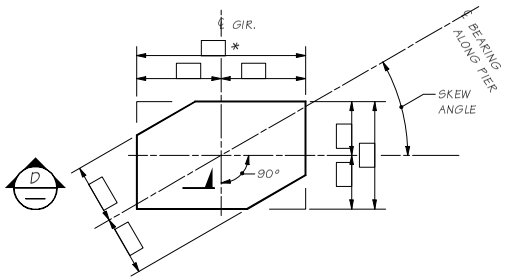

BEARING PAD

LAMINATED ELASTOMERIC BRIDGE PAD ☐ THICK (☐ SHIMS)

Skew angle shown at 30°.

* The edge of the bearing pad shall be set at 1" from the edge of the bottom flange.

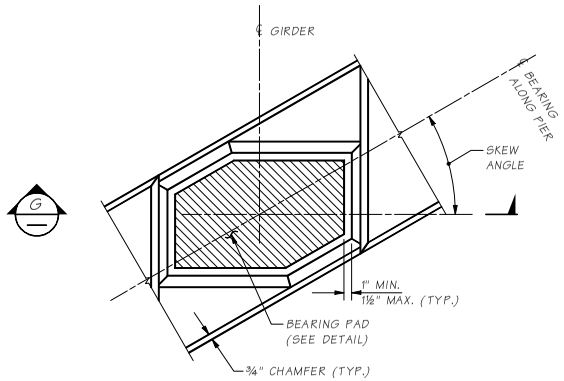

GROUT PAD DETAIL

Skew angle shown at 30°.

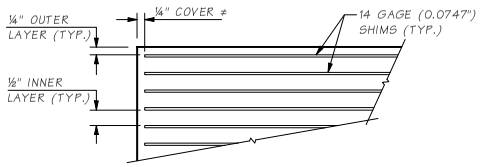

SECTION D

** ½" for pad thickness ≤ 3"
¼" for 3" < pad thickness ≤ 7"
½" for pad thickness > 7"

BEARING DESIGN TABLE	
SERVICE - I LIMIT STATE	
DEAD LOAD REACTION	KIPS
LIVE LOAD REACTION (W/O IMPACT)	KIPS
UNLOADED HEIGHT	IN.
LOADED HEIGHT (DL)	IN.
DUROMETER HARDNESS	60

Bridge Design Engr.	M:\STANDARDS\Girders\Bulb Tee Girder\BULB TEE MISC DIAPH DETAIL.MAN									
Supervisor						REGION NO.	STATE	FED. AID PROJ. NO.	SHEET NO.	TOTAL SHEETS
Designed By						10	WASH.			
Checked By						JOB NUMBER				
Detailed By										
Bridge Projects Engr.										
Prelim Plan By										
Architect/Specialist	DATE	REVISION		BY	APP'D					

BRIDGE AND STRUCTURES OFFICE

Washington State Department of Transportation

STANDARD PRESTRESSED CONCRETE GIRDERS

BULB TEE MISCELLANEOUS BEARING DETAILS

BRIDGE SHEET NO.

SHEET OF SHEETS

SR ____ JOB NO. ____ SHEET

5.6-A4-9

Wed Oct 31 09:12:57 2007

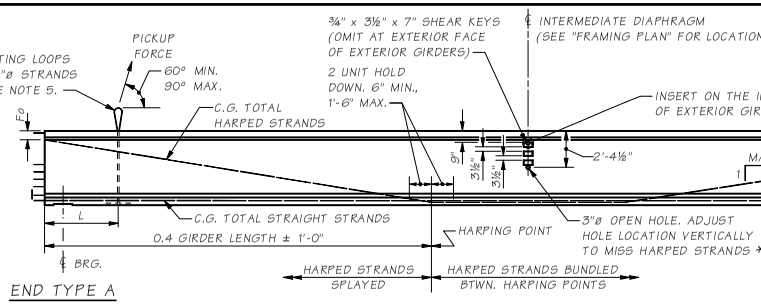

GIRDER ELEVATION

* OMIT HOLES AND PLACE INSERTS ON THE INTERIOR FACE OF EXTERIOR GIRDERS. PLACE HOLES AND INSERTS PARALLEL TO SKEW. INSERTS SHALL BE 1"ø BURKE HI-TENSILE, LANCASTER MALLEABLE, DAYTON-SUPERIOR F-62 FLARED THIN SLAB (1" x 4⅝") FERRULE OR APPROVED EQUAL. (TYP.)

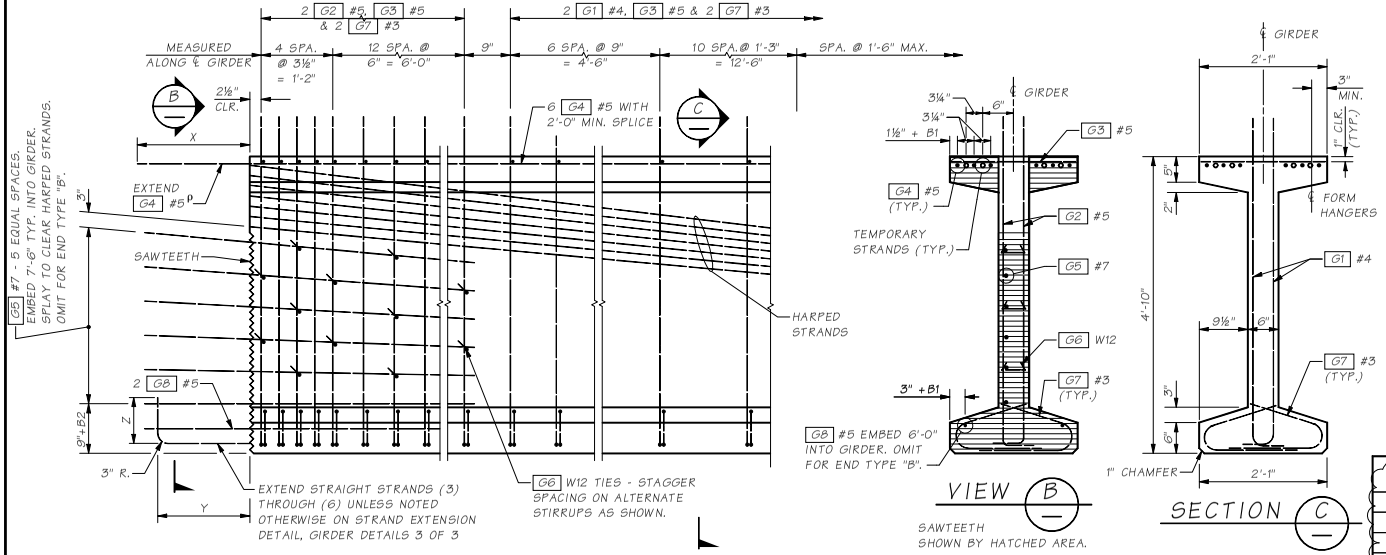

TYPICAL END ELEVATION

END TYPE C SHOWN, OTHER END TYPES SIMILAR.

ρ FIELD BENDING REQUIRED TO OBTAIN 1½" CONCRETE COVER AT PAVEMENT SEAT.

(stirrup spacing shall be determined by the designer.)

FOR END TYPE "C"

ENDS AHEAD ON STATION
G5 BARS LEFT OF ℄
B1 = 0" (G4 , G8)
B2 = 0" (G5)
ENDS BACK ON STATION
G5 BARS RIGHT OF ℄
B1 = 1½"(G4 , G8)
B2 = 3" (G5)

Diaphragm Type	END TYPE	BEARING RECESS	X	Y	Z	SAWTEETH
End Diaph. on Girder	A	YES	1'-10"	1'-6"	9"	YES
"L" Abutment	B	YES	0"	0"	0"	NO
Hinge Diaph. on Interm. Pier	C	NO	1'-10"	1'-6"	9"	YES
Fixed Diaph. @ Interm. Pier	D	NO	1'-10"	ALT. 1 OR ALT. 2 STRAND EXTEN.		YES

INTERMEDIATE DIAPHRAGM:
1/3 points of span for span lengths 80'-0" to 120'-0"
1/2 points of span for span lengths less than 40'-0" to 80'-0"
No intermediate diaphragm for span lengths 40'-0" or less.

MARK	LOCATION	SIZE	
G1	GIRDER STIRRUPS	4	
G2	GIRDER END STIRRUPS	5	
G3	GIRDER TOP FLANGE	5	STR.
G4	GIRDER LONGIT. FULL LENGTH	5	STR.
G5	GIRDER END LONGIT.	7	STR.
G6	GIRDER END TIES	W12 δ	
G7β	GIRDER BOT. FLANGE TIES	3	
G8	GIRDER END LONGIT.	5	STR.
G9β	GIRDER BOT. FLANGE TIES	3	
G10β	GIRDER BOT. FLANGE TIES	3	

BENDING DIAGRAM (ALL DIMENSIONS ARE OUT TO OUT)
NOTE: FOR DIMENSION "A", SEE "GIRDER SCHEDULE"

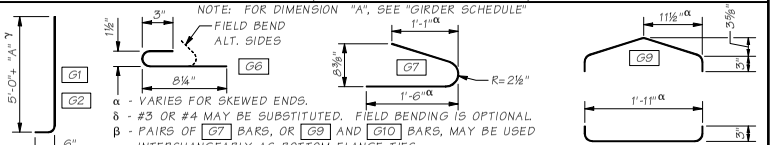

α - VARIES FOR SKEWED ENDS.
δ - #3 OR #4 MAY BE SUBSTITUTED. FIELD BENDING IS OPTIONAL.
β - PAIRS OF G7 BARS, OR G9 AND G10 BARS, MAY BE USED INTERCHANGEABLY AS BOTTOM FLANGE TIES.
γ - SHALL BE CHECKED FOR EFFECT OF VERTICAL CURVE.

Bridge Design Engr.	M:\STANDARDS\Girders\I-Girders\W58G\W58G1.man							
Supervisor				REGION NO.	STATE	FED. AID PROJ. NO.	SHEET NO.	TOTAL SHEETS
Designed By				10	WASH.			
Checked By				JOB NUMBER				
Detailed By								
Bridge Projects Engr.								
Prelim. Plan By								
Architect/Specialist	DATE	REVISION	BY	APP'D				

BRIDGE AND STRUCTURES OFFICE

Washington State Department of Transportation

STANDARD PRESTRESSED CONCRETE GIRDERS

W58G GIRDER DETAILS 1 OF 3

BRIDGE SHEET NO. SHEET OF SHEETS

SR ____ SHEET ____ JOB NO. 5.6-A5-1

Fri Feb 01 13:42:12 2008

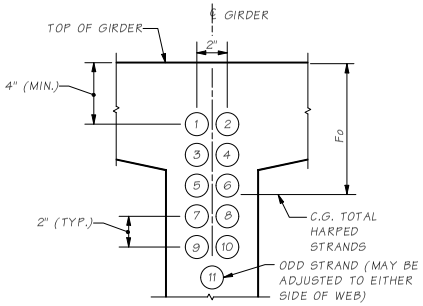

STRAND PATTERN AT GIRDER END

HARPED STRAND LOCATION SEQUENCE SHALL BE AS SHOWN (1), (2) ETC.

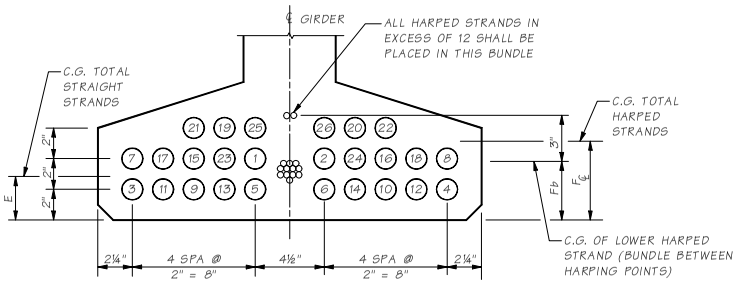

STRAND PATTERN AT ℄ SPAN

STRAIGHT STRAND LOCATION SEQUENCE SHALL BE AS SHOWN (1), (2) ETC.

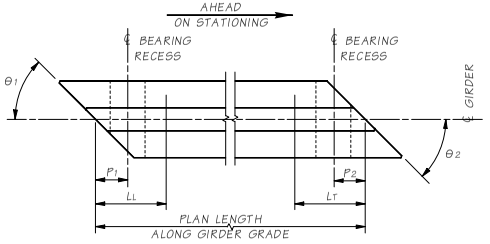

NOTE:
LL AND LT ARE SHIPPING SUPPORT LOCATIONS AT LEADING AND TRAILING ENDS, RESPECTIVELY.

GIRDER SCHEDULE

DIMENSION "A" AT ℄ BEARINGS = BASED ON GIRDER DEFLECTION = "D" AT TIME OF SLAB PLACEMENT (120 DAYS)

SPAN	GIRDER	END 1 TYPE	END 2 TYPE	L	LL	LT	θ1 (DEG.)	θ2 (DEG.)	P1	P2	PLAN LENGTH (ALONG GIRDER GRADE)	MIN. CONC. COMP. STRENGTH @ FINAL F'C (KSI)	MIN. CONC. COMP. STRENGTH @ RELEASE F'CI (KSI)	HARPED NO. OF STRANDS	HARPED JACKING FORCE (KIPS)	STRAIGHT NO. OF STRANDS	STRAIGHT JACKING FORCE (KIPS)	TEMPORARY NO. OF STRANDS	TEMPORARY JACKING FORCE (KIPS)	LOCATION OF C.G. STRANDS E	LOCATION OF C.G. STRANDS F℄	LOCATION OF C.G. STRANDS Fb	LOCATION OF C.G. STRANDS Fo	C	D @ 40 DAYS	D @ 120 DAYS	Ld
-	-	-	-	-	-	-	-	-	-	-	-	-	-	-	-	-	-	-	-	-	-	-	-	-	-	-	-	-
-	-	-	-	-	-	-	-	-	-	-	-	-	-	-	-	-	-	-	-	-	-	-	-	-	-	-	-	-

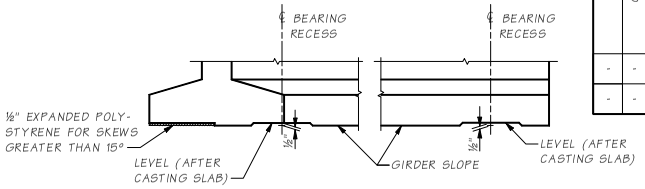

ELEVATION

NOTE:
Dimensions shall be shown in Imperial units to the nearest 1/8th inch.

The number of harped strands should not exceed ½ of the number of straight strands.

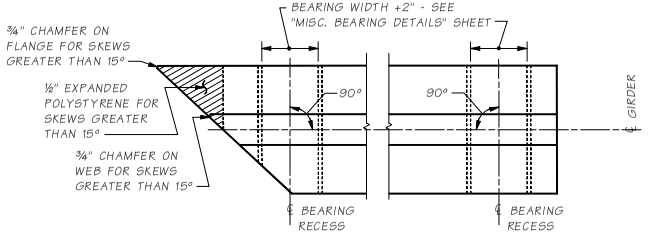

PLAN
BEARING RECESS AND BOTTOM FLANGE SPALL PROTECTION

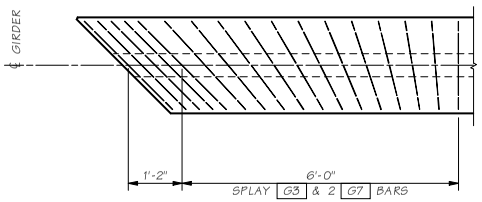

TRANSVERSE REINFORCING SKEWED ENDS

ONLY TRANSVERSE REINF. SHOWN

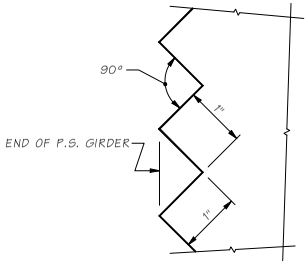

SAWTOOTH DETAILS

SAWTEETH ARE FULL WIDTH - USE SAWTOOTH KEYS FROM BOTTOM OF BOTTOM FLANGE TO BOTTOM OF LOWEST HARPED STRAND AS WELL AS TOP FLANGE ADJACENT TO HARPED STRANDS AS SHOWN IN VIEW B - GIRDER DETAILS 1 OF 3

Bridge Design Engr.	M:\STANDARDS\Girders\I-Girders\W58G\W58G2.man				REGION NO.	STATE	FED. AID PROJ. NO.	SHEET NO.	TOTAL SHEETS	BRIDGE AND STRUCTURES OFFICE
Supervisor					10	WASH.				Washington State Department of Transportation
Designed By					JOB NUMBER					STANDARD PRESTRESSED CONCRETE GIRDERS
Checked By										W58G GIRDER DETAILS 2 OF 3
Detailed By										BRIDGE SHEET NO.
Bridge Projects Engr.										SHEET OF SHEETS
Prelim. Plan By										
Architect/Specialist	DATE	REVISION	BY	APP'D						

SR JOB NO. SHEET
5.6-A5-2

Fri Feb 01 13:42:18 2008

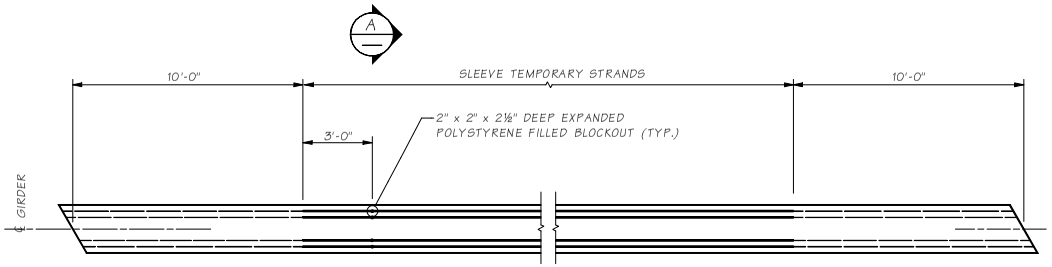

PLAN
PRETENSIONED TEMPORARY TOP STRANDS

POST-TENSIONED TEMPORARY TOP STRANDS SIMILAR, EXCEPT 10'-0" LENGTH OF BONDING OCCURS AT ONE END ONLY. THE OPPOSING END IS ANCHORED WITH PLATES AND STRAND CHUCKS.

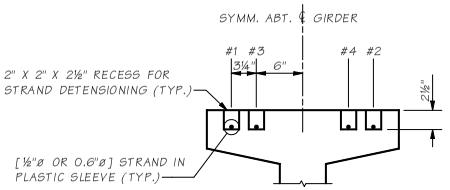

SECTION A

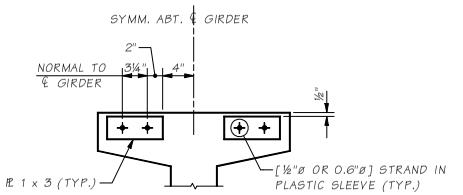

END VIEW
TEMPORARY STRAND POST-TENSIONED ALTERNATE

ADJUST G4 BARS TO CLEAR THE STEEL PLATE

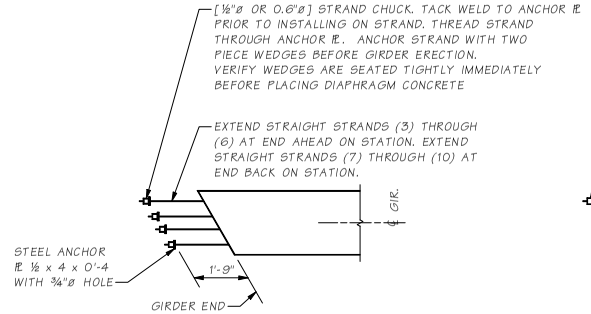

ALTERNATE #1

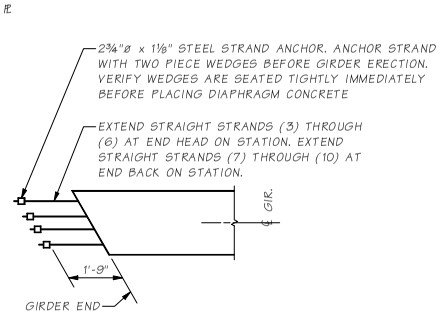

ALTERNATE #2

STRAND EXTENSION DETAIL

Number of extended strands shall be determined by the designer.

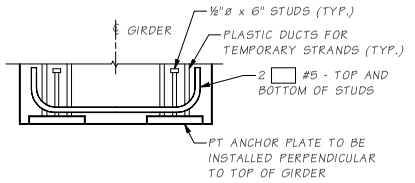

PLAN
TEMPORARY STRAND POST-TENSIONED ALTERNATE

Bridge Design Engr.	M:\STANDARDS\Girders\I-Girders\W58G\W58G3.man								
Supervisor					REGION NO.	STATE	FED. AID PROJ. NO.	SHEET NO.	TOTAL SHEETS
Designed By					10	WASH.			
Checked By					JOB NUMBER				
Detailed By									
Bridge Projects Engr.									
Prelim Plan By									
Architect/Specialist	DATE	REVISION	BY	APP'D					

BRIDGE AND STRUCTURES OFFICE

Washington State Department of Transportation

STANDARD PRESTRESSED CONCRETE GIRDERS

W58G GIRDER DETAILS 3 OF 3

BRIDGE SHEET NO. SHEET OF SHEETS

SR ___ JOB NO. ___ SHEET 3

5.6-A5-3

Fri Feb 01 13:42:26 2008

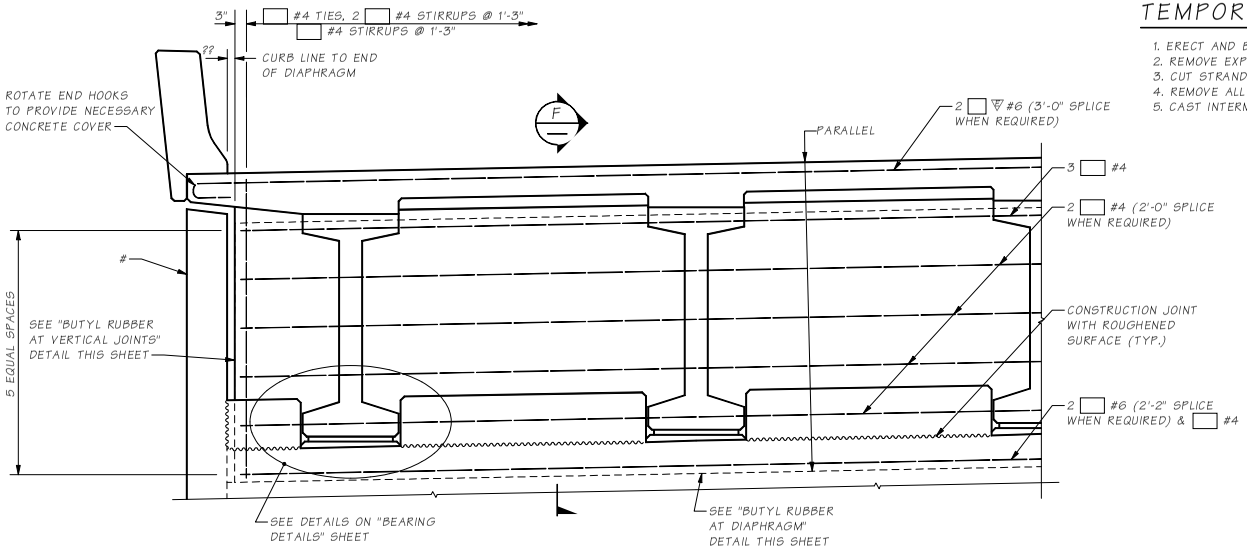

TEMPORARY STRAND CUTTING SEQUENCE

1. ERECT AND BRACE GIRDERS.
2. REMOVE EXPANDED POLYSTYRENE IN 2" x 2" RECESSES IN TOP FLANGE OF GIRDERS.
3. CUT STRAND AND PLASTIC SLEEVE IN 2" x 2" RECESS.
4. REMOVE ALL MOISTURE IN RECESS PRIOR TO FILLING RECESS WITH GROUT.
5. CAST INTERMEDIATE & END DIAPHRAGMS.

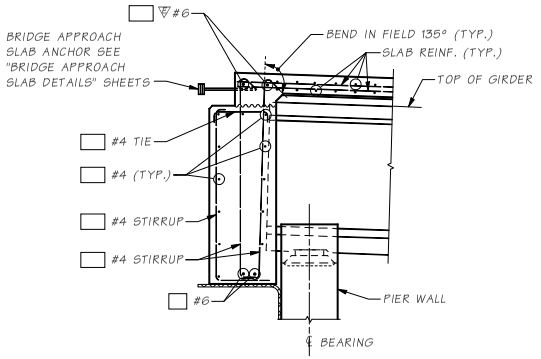

SECTION F

\# If ground line is less than 2'-0" minimum below the bottom of girder at front face of abutment a curtain wall shall be provided.

ELEVATION END DIAPHRAGM

DIMENSIONS ARE ALONG DIAPHRAGM

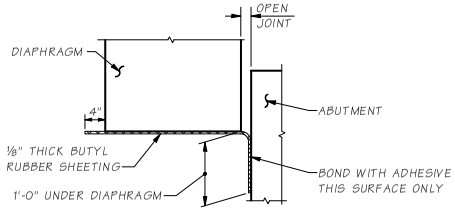

ELEVATION BUTYL RUBBER AT DIAPHRAGM

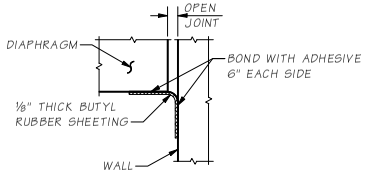

PLAN BUTYL RUBBER AT VERTICAL JOINTS

Bridge length	Open Joint
L ≤ 200'	** = 1.5"
200' < L ≤ 300'	** = 2.0"
300' < L ≤ 400'	** = 2.5"
L > 400'	Special design

* Revise based on size of Open Joint

NOTE:
GIRDERS SHALL BE HELD RIGIDLY IN PLACE WHEN DIAPHRAGMS ARE PLACED.

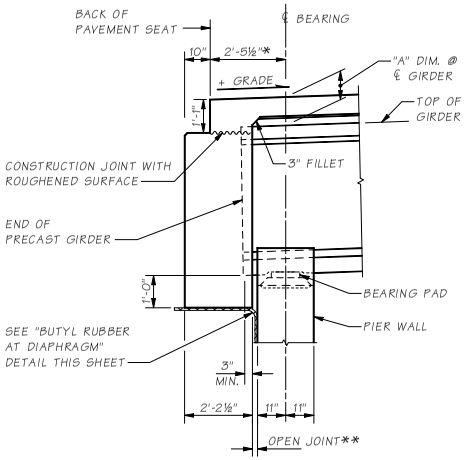

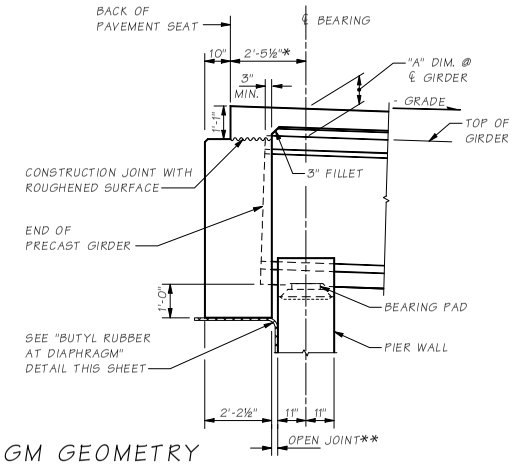

END DIAPHRAGM GEOMETRY

SEE "GIRDER DETAILS" SHEET FOR DIMENSION "A".
ALL LONGITUDINAL DIMENSIONS ARE NORMAL TO SKEW.

Bridge Design Engr.	M:\STANDARDS\Girders\I-Girders\W58G\W58G_END_DIA_ON_GIR.MAN				REGION NO.	STATE	FED. AID PROJ. NO.	SHEET NO.	TOTAL SHEETS	BRIDGE AND STRUCTURES OFFICE
Supervisor					10	WASH.				Washington State Department of Transportation
Designed By										
Checked By					JOB NUMBER					W58G END DIAPHRAGM ON GIRDER DETAILS
Detailed By										
Bridge Projects Engr.										
Prelim. Plan By										
Architect/Specialist	DATE	REVISION	BY	APP'D						

BRIDGE SHEET NO. 5.6-A5-4
SHEET OF SHEETS
JOB NO.
SR

Fri Feb 01 13:42:31 2008

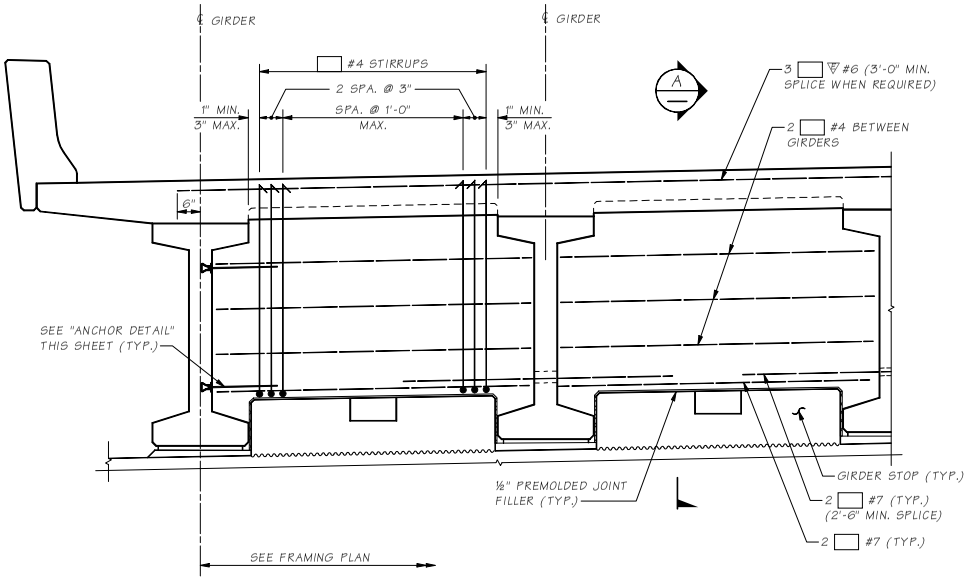

ELEVATION END DIAPHRAGM

DIMENSIONS ARE ALONG DIAPHRAGM

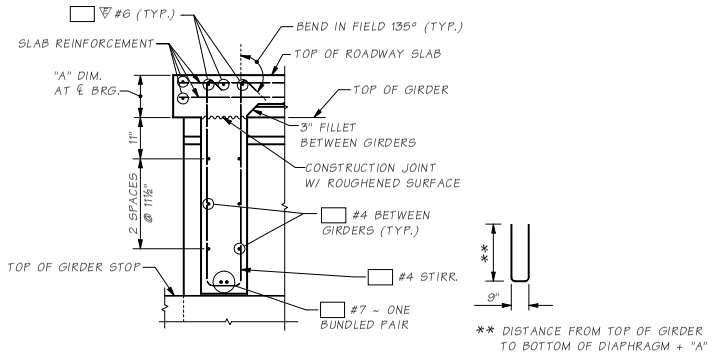

SECTION A

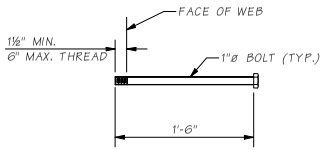

ANCHOR DETAIL

ASTM A-307

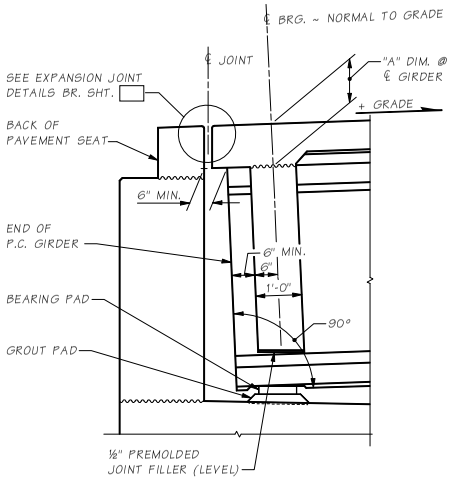

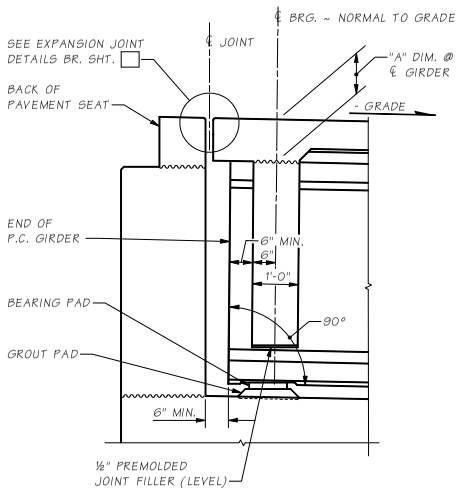

ROADWAY EXPANSION JOINT AT END PIERS

LONGITUDINAL DIMENSIONS ARE NORMAL TO SKEW.
GIRDER STOP NOT SHOWN FOR CLARITY.

TEMPORARY STRAND CUTTING SEQUENCE

1. ERECT AND BRACE GIRDERS.
2. REMOVE EXPANDED POLYSTYRENE IN 2" x 2" RECESSES IN TOP FLANGE OF GIRDERS.
3. CUT STRAND AND PLASTIC SLEEVE IN 2" x 2" RECESS.
4. REMOVE ALL MOISTURE IN RECESS PRIOR TO FILLING RECESS WITH GROUT.
5. CAST INTERMEDIATE & END DIAPHRAGMS.

NOTE:

GIRDERS SHALL BE HELD RIGIDLY IN PLACE WHEN DIAPHRAGMS ARE PLACED. REINFORCING BAR SHALL BE THREADED THROUGH HOLES IN GIRDERS PRIOR TO PLACING OF EXTERIOR GIRDERS. SEE "GIRDER DETAILS" SHEET FOR DIMENSION "A".

Bridge Design Engr.	M:\STANDARDS\Girders\I-Girders\W58G\W58G_ABUT_PIER_DIAPH_DET.MAN								
Supervisor					REGION NO.	STATE	FED. AID PROJ. NO.	SHEET NO.	TOTAL SHEETS
Designed By					10	WASH.			
Checked By					JOB NUMBER				
Detailed By									
Bridge Projects Engr.									
Prelim Plan By									
Architect/Specialist	DATE	REVISION	BY	APP'D					

BRIDGE AND STRUCTURES OFFICE

Washington State Department of Transportation

STANDARD PRESTRESSED CONCRETE GIRDERS

W58G ABUTMENT TYPE PIER DIAPHRAGM DETAILS

BRIDGE SHEET NO.

SHEET OF SHEETS

SR ____ JOB NO. ____ SHEET ____

5.6-A5-5

Fri Feb 01 13:42:38 2008

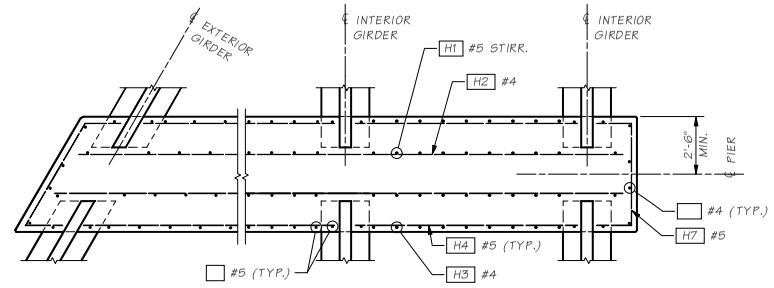

SECTION B

ELEVATION AT TOP OF OAK BLOCK

GIRDER	PIER ?	
	BACK STATION	AHEAD STATION

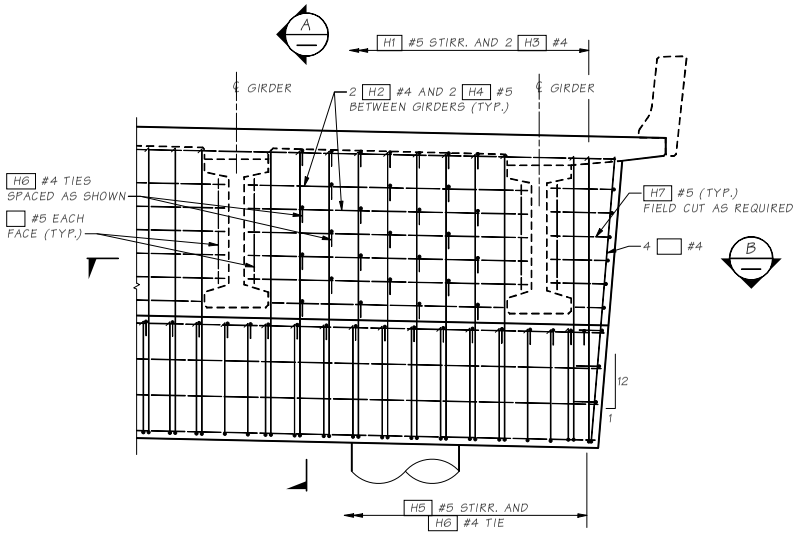

ELEVATION

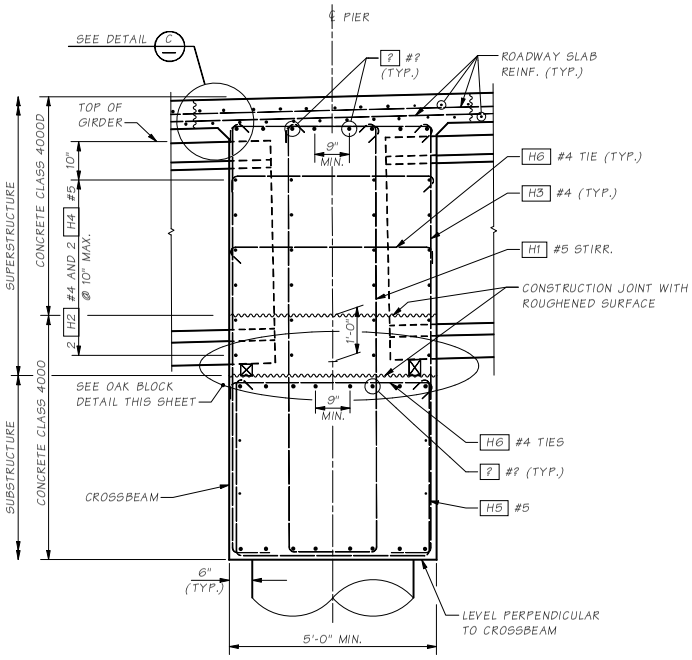

NOTES:
1. LONGITUDINAL DIMENSIONS ARE NORMAL TO SKEW.
2. FOR CONCRETE PLACEMENT PROCEDURE SEE "SUPERSTRUCTURE CONSTRUCTION SEQEUNCE" SHEET.

SECTION A

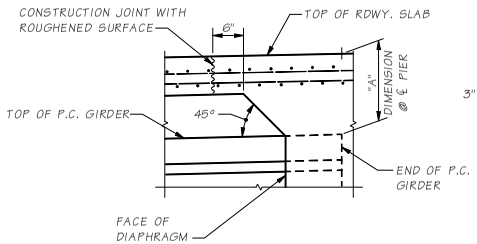

DETAIL C

DIAPHRAGM REINFORCING NOT SHOWN FOR CLARITY

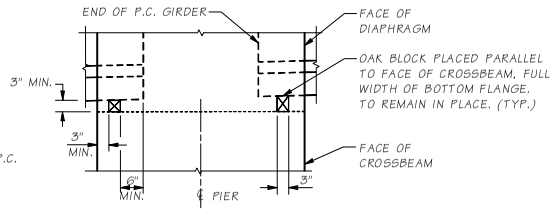

OAK BLOCK DETAIL

LONGITUDINAL DIMENSIONS ARE NORMAL TO SKEW

NOTE TO DESIGNER

The actual bar size and spacing shall be determined by the designer.

Bridge Design Engr.	M:\STANDARDS\Girders\I-Girders\W58G\W58G_FIX_FLUSH_FACE_INTER_PIER_DIAPH_DET.MAN				REGION NO.	STATE	FED. AID PROJ. NO.	SHEET NO.	TOTAL SHEETS
Supervisor					10	WASH			
Designed By									
Checked By					JOB NUMBER				
Detailed By									
Bridge Projects Engr.									
Prelim Plan By									
Architect/Specialist	DATE	REVISION	BY	APP'D					

Fri Feb 01 13:42:45 2008

BRIDGE AND STRUCTURES OFFICE

Washington State Department of Transportation

STANDARD PRESTRESSED CONCRETE GIRDERS

W58G FIXED FLUSH-FACE DIAPHRAGM AT INTERMEDIATE PIER DETAILS

BRIDGE SHEET NO.

SHEET OF SHEETS

SR JOB NO. SHEET 5.6-A5-6

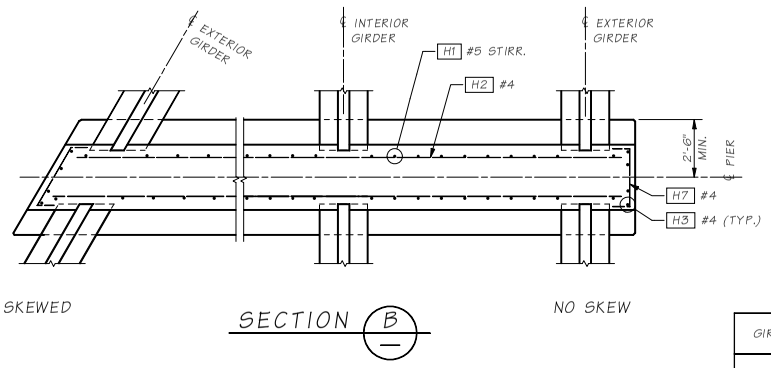

SECTION B

ELEVATION AT TOP OF OAK BLOCK

GIRDER	PIER ?	
	BACK STATION	AHEAD STATION

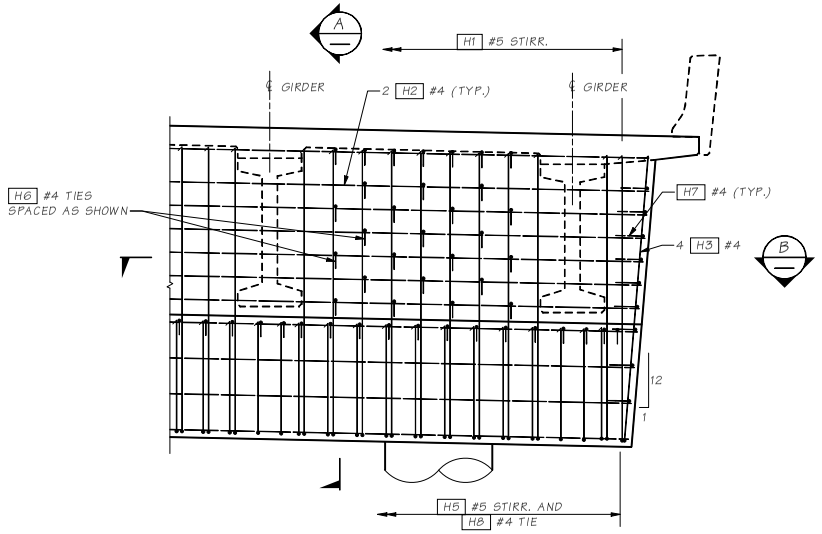

ELEVATION

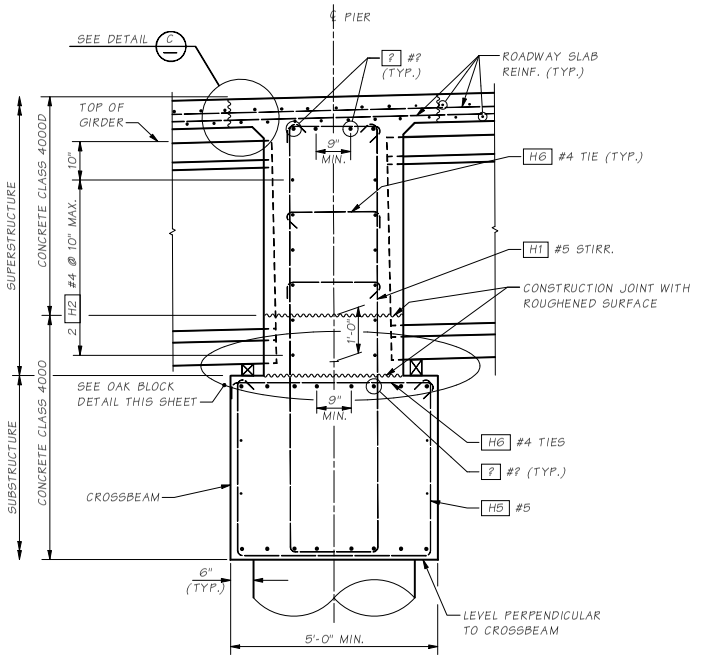

SECTION A

NOTES:
1. LONGITUDINAL DIMENSIONS ARE NORMAL TO SKEW.
2. FOR CONCRETE PLACEMENT PROCEDURE SEE "SUPERSTRUCTURE CONSTRUCTION SEQEUNCE" SHEET.

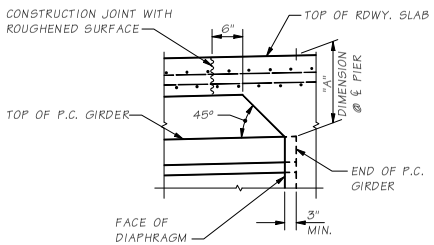

DETAIL C

DIAPHRAGM REINFORCING NOT SHOWN FOR CLARITY

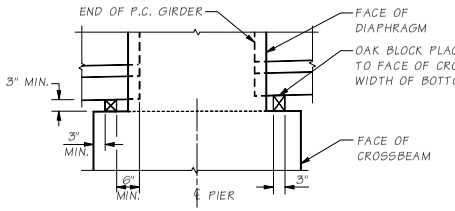

OAK BLOCK DETAIL

LONGITUDINAL DIMENSIONS ARE NORMAL TO SKEW

NOTE TO DESIGNER

The actual bar size and spacing shall be determined by the designer.

Bridge Design Engr.	M:\STANDARDS\Girders\I-Girders\W58G\W58G_FIX_RECESSED_FACE_INTER_PIER_DIAPH_DET.MAN								
Supervisor					REGION NO.	STATE	FED. AID PROJ. NO.	SHEET NO.	TOTAL SHEETS
Designed By					10	WASH.			
Checked By					JOB NUMBER				
Detailed By									
Bridge Projects Engr.									
Prelim. Plan By									
Architect/Specialist	DATE	REVISION	BY	APP'D					

BRIDGE AND STRUCTURES OFFICE

Washington State Department of Transportation

STANDARD PRESTRESSED CONCRETE GIRDERS

W58G FIXED RECESSED-FACE DIAPHRAGM AT INTERMEDIATE PIER DETAILS

BRIDGE SHEET NO. SHEET OF SHEETS

SR JOB NO. SHEET 5.6-A5-7

Fri Feb 01 13:42:52 2008

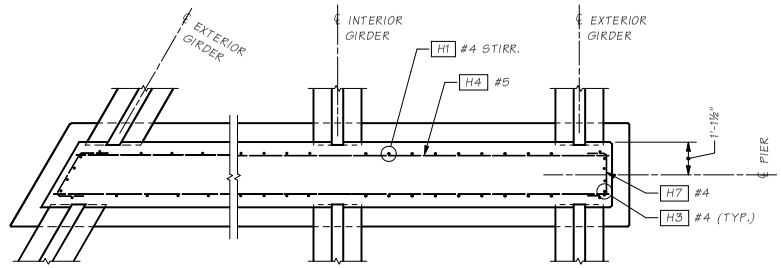

SECTION B

ELEVATION AT TOP OF OAK BLOCK

GIRDER	PIER ?	
	BACK STATION	AHEAD STATION

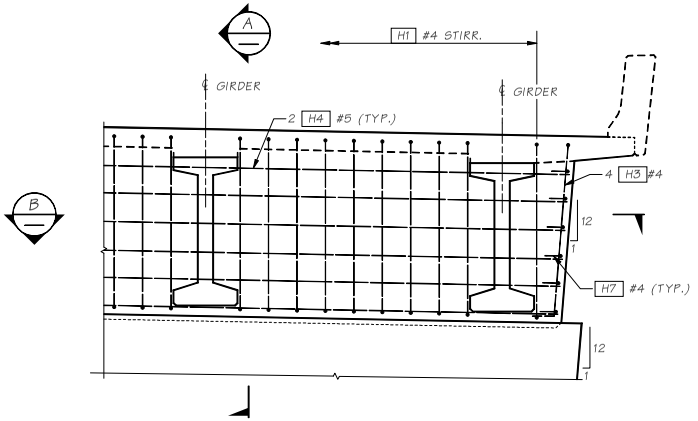

ELEVATION

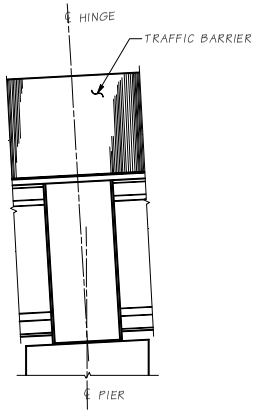

END VIEW
HINGE DIAPHRAGM

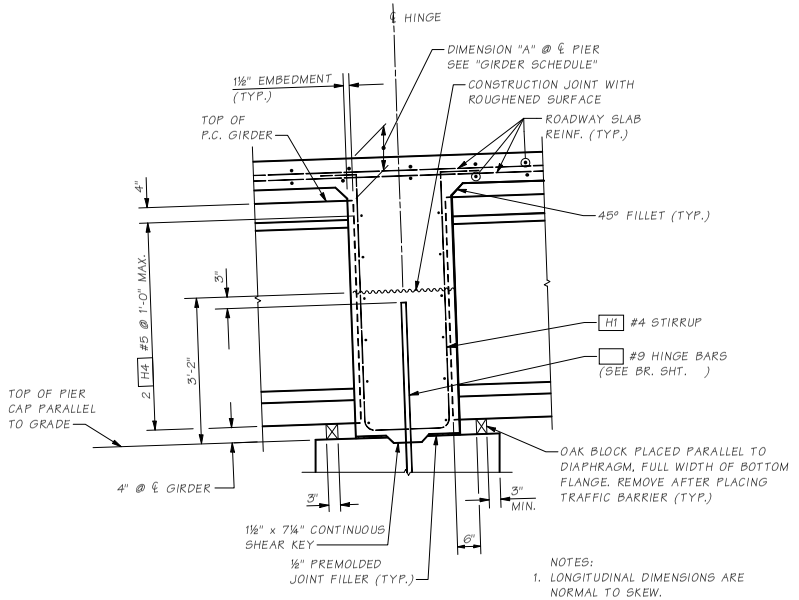

SECTION A

NOTES:
1. LONGITUDINAL DIMENSIONS ARE NORMAL TO SKEW.
2. FOR CONCRETE PLACEMENT PROCEDURE SEE "SUPERSTRUCTURE CONSTRUCTION SEQEUNCE" SHEET.
3. EXTENDED STRANDS AND GIRDER REINFORCING NOT SHOWN FOR CLARITY.

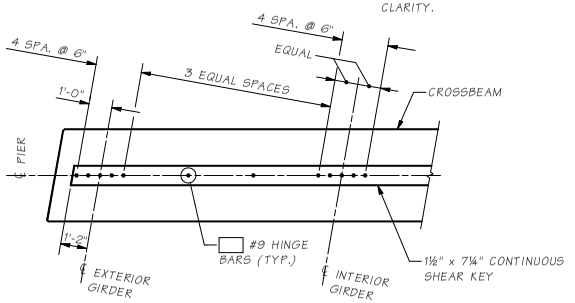

HINGE BAR PLAN

Hinge bar plan is shown for designer. The actual hinge bars detail shall be shown on the crossbeam details sheet.

Bridge Design Engr.	M:\STANDARDS\Girders\I-Girders\W58G\W58G_HINGE_DIAPHRAGM_INTER_PIER_DIAPH_DET.MAN				REGION NO.	STATE	FED. AID PROJ. NO.	SHEET NO.	TOTAL SHEETS
Supervisor					10	WASH.			
Designed By					JOB NUMBER				
Checked By									
Detailed By									
Bridge Projects Engr.									
Prelim Plan By									
Architect/Specialist	DATE	REVISION	BY	APP'D					

BRIDGE AND STRUCTURES OFFICE

Washington State Department of Transportation

STANDARD PRESTRESSED CONCRETE GIRDERS

W58G HINGE DIAPHRAGM AT INTERMEDIATE PIER DETAILS

BRIDGE SHEET NO. SHEET OF SHEETS

SR JOB NO. SHEET 5.6-A5-8

Fri Feb 01 13:42:59 2008

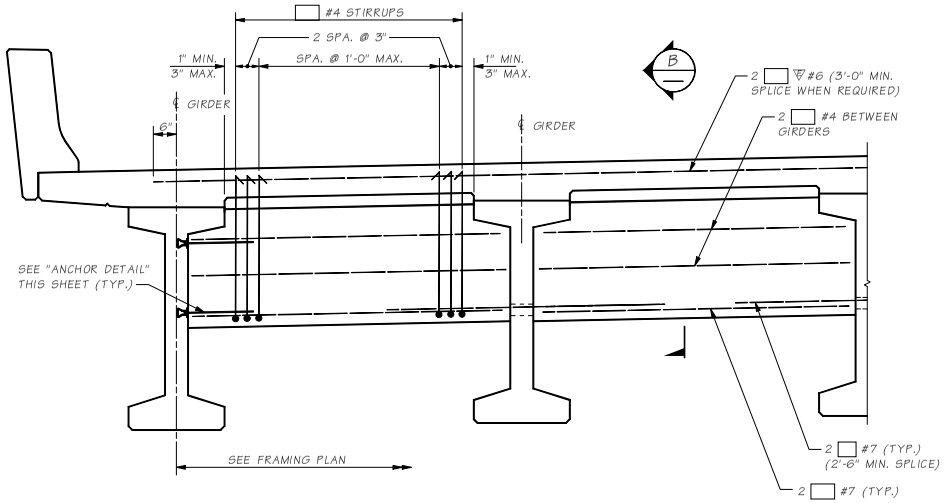

ELEVATION
INTERMEDIATE DIAPHRAGM

DIMENSIONS ARE ALONG DIAPHRAGM

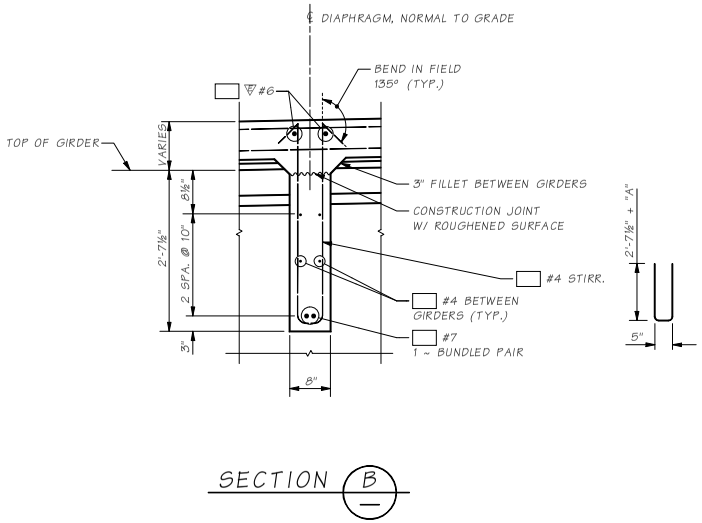

SECTION B

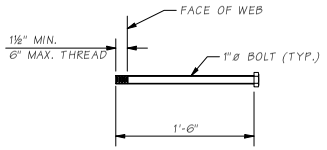

ANCHOR DETAIL

ASTM A-307

NOTE:

GIRDERS SHALL BE HELD RIGIDLY IN PLACE WHEN DIAPHRAGMS ARE PLACED. REINFORCING BAR SHALL BE THREADED THROUGH HOLES IN GIRDERS PRIOR TO PLACING OF EXTERIOR GIRDERS. SEE "GIRDER DETAILS" SHEET FOR DIMENSION "A".

Bridge Design Engr.	M:\STANDARDS\Girders\I-Girders\W58G\W58G_INTER_DIAPHRAGM_DET.MAN				REGION NO.	STATE	FED. AID PROJ. NO.	SHEET NO.	TOTAL SHEETS
Supervisor					10	WASH.			
Designed By									
Checked By					JOB NUMBER				
Detailed By									
Bridge Projects Engr.									
Prelim. Plan By									
Architect/Specialist	DATE	REVISION	BY	APP'D					

BRIDGE AND STRUCTURES OFFICE

Washington State Department of Transportation

W58G INTERMEDIATE DIAPHRAGM DETAILS

BRIDGE SHEET NO.

SHEET OF SHEETS

SR ____ FILE NO. ____ SHEET ____

5.6-A5-6

Fri Feb 01 13:43:07 2008

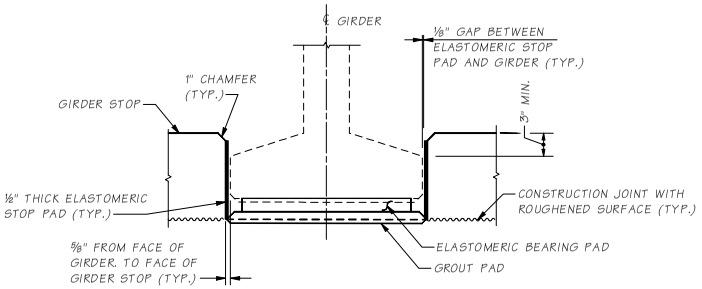

SECTION G

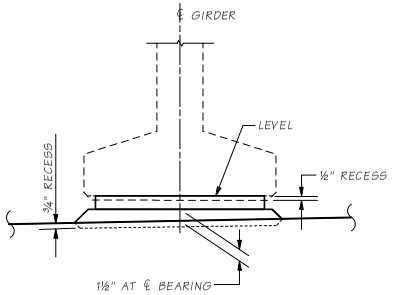

GROUT PAD ELEVATION

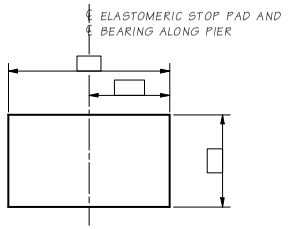

ELASTOMERIC STOP PAD

DUROMETER HARDNESS = 60

NOTE:

1. GIRDER STOPS SHALL BE CONSTRUCTED AFTER GIRDER PLACEMENT.
2. THE ELASTOMERIC STOP PADS SHALL BE CEMENTED TO GIRDER STOPS WITH APPROVED ADHESIVE.

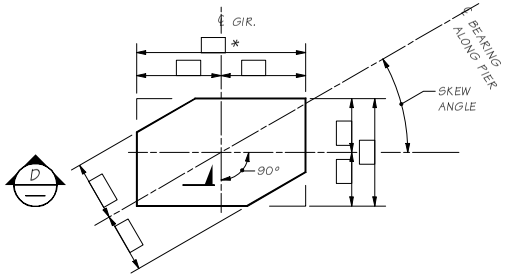

BEARING PAD

LAMINATED ELASTOMERIC BRIDGE PAD ☐ THICK (☐ SHIMS)

Skew angle shown at 30°.

* The edge of the bearing pad shall be set at 1" from the edge of the bottom flange.

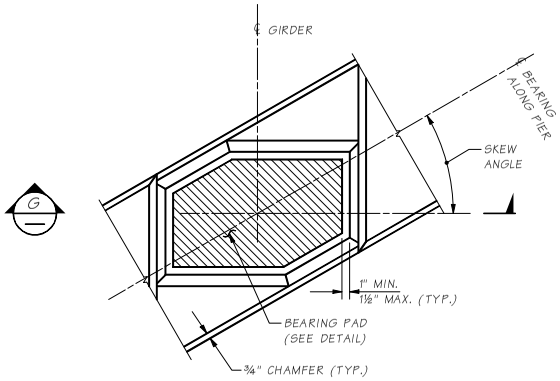

GROUT PAD DETAIL

Skew angle shown at 30°.

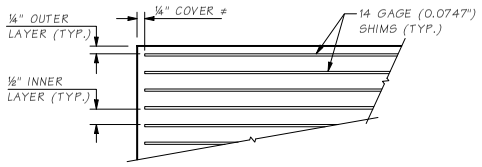

SECTION D

≠ 1/8" for pad thickness ≤ 3"
1/4" for 3" < pad thickness ≤ 7"
1/2" for pad thickness > 7"

BEARING DESIGN TABLE	
SERVICE - I LIMIT STATE	
DEAD LOAD REACTION	KIPS
LIVE LOAD REACTION (W/O IMPACT)	KIPS
UNLOADED HEIGHT	IN.
LOADED HEIGHT (DL)	IN.
DUROMETER HARDNESS	60

Bridge Design Engr.	M:\STANDARDS\Girders\I-Girders\W58G\W58G_MISC_BEARING_DET.MAN				REGION NO.	STATE	FED. AID PROJ. NO.	SHEET NO.	TOTAL SHEETS
Supervisor					10	WASH.			
Designed By					JOB NUMBER				
Checked By									
Detailed By									
Bridge Projects Engr.									
Prelim Plan By									
Architect/Specialist	DATE	REVISION	BY	APP'D					

BRIDGE AND STRUCTURES OFFICE

Washington State Department of Transportation

STANDARD PRESTRESSED CONCRETE GIRDERS

W58G MISCELLANEOUS BEARING DETAILS

BRIDGE SHEET NO.
SHEET
OF
SHEETS

SR ____ JOB NO. ____ SHEET ____

5.6-A5-10

Fri Feb 01 13:43:17 2008

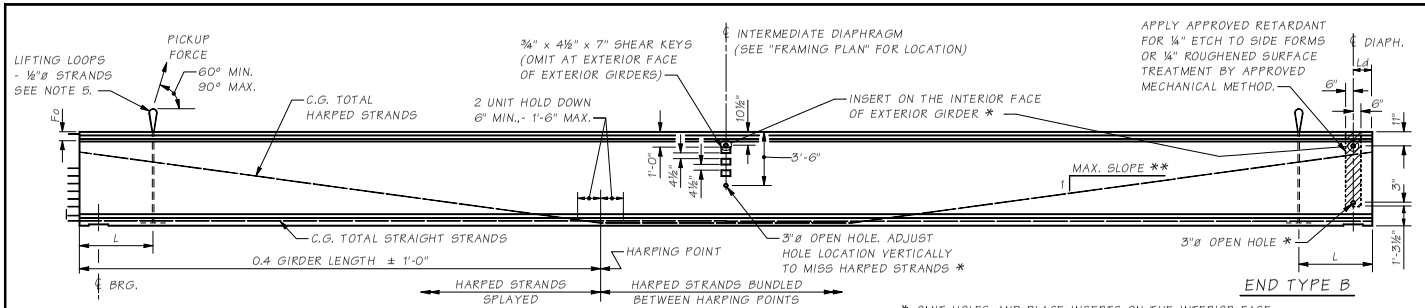

GIRDER ELEVATION

* OMIT HOLES AND PLACE INSERTS ON THE INTERIOR FACE OF EXTERIOR GIRDERS. PLACE HOLES AND INSERTS PARALLEL TO SKEW. INSERTS SHALL BE 1"ø BURKE HI-TENSILE, LANCASTER MALLEABLE, DAYTON-SUPERIOR F-62 FLARED THIN SLAB (1" x 4⅝") FERRULE OR APPROVED EQUAL. (TYP.)

** MAXIMUM SLOPE FOR STRANDS
6 : 1 FOR EACH ½"ø STRAND OR
8 : 1 FOR EACH 0.6"ø STRAND

NOTES

1. PLAN LENGTH SHALL BE INCREASED AS NECESSARY TO COMPENSATE FOR SHORTENING DUE TO PRESTRESS AND SHRINKAGE.
2. ALL PRETENSIONED AND TEMPORARY STRANDS SHALL BE [½"ø OR 0.6"ø] LOW RELAXATION STRANDS (AASHTO M203 GRADE 270.)
3. FOR END TYPES A, C AND D, CUT ALL STRANDS FLUSH WITH THE GIRDER ENDS AND PAINT WITH AN APPROVED EPOXY RESIN, EXCEPT FOR EXTENDED STRANDS AS SHOWN. FOR END TYPE B CUT ALL STRANDS 1" BELOW CONCRETE SURFACE AND GROUT WITH AN APPROVED EPOXY GROUT.
4. THE TOP SURFACE OF THE GIRDER FLANGE SHALL BE ROUGHENED IN ACCORDANCE WITH SECTION 6-02.3(25)H OF THE STANDARD SPECIFICATIONS.
5. LIFTING EMBEDMENTS SHALL BE INSTALLED IN ACCORDANCE WITH SECTION 6-02.3(25)L OF THE STANDARD SPECIFICATIONS.
6. CAUTION SHALL BE EXERCISED IN HANDLING AND PLACING GIRDERS. ALL GIRDERS SHALL BE CHECKED BY THE CONTRACTOR TO ENSURE THAT THEY ARE BRACED ADEQUATELY TO PREVENT TIPPING AND TO CONTROL LATERAL BENDING DURING SHIPPING. ONCE ERECTED, ALL GIRDERS SHALL BE BRACED LATERALLY TO PREVENT TIPPING UNTIL THE DIAPHRAGMS ARE CAST AND CURED.
7. FORMS FOR BEARING PAD RECESSES SHALL BE CONSTRUCTED AND FASTENED IN SUCH A MANNER AS TO NOT CAUSE DAMAGE TO THE GIRDER DURING THE STRAND RELEASE OPERATION.
8. TEMPORARY STRANDS SHALL BE EITHER PRETENSIONED OR POST-TENSIONED IN ACCORDANCE WITH SECTION 6-02.3(25)L OF THE STANDARD SPECIFICATIONS. IF PRETENSIONED, THESE TEMPORARY STRANDS SHALL BE UNBONDED OVER ALL BUT THE END 10'-0" OF THE GIRDER LENGTH. AS AN ALTERNATE, TEMPORARY STRANDS MAY BE POST-TENSIONED ON THE SAME DAY THE PRETENSIONING IS RELEASED INTO THE GIRDER.

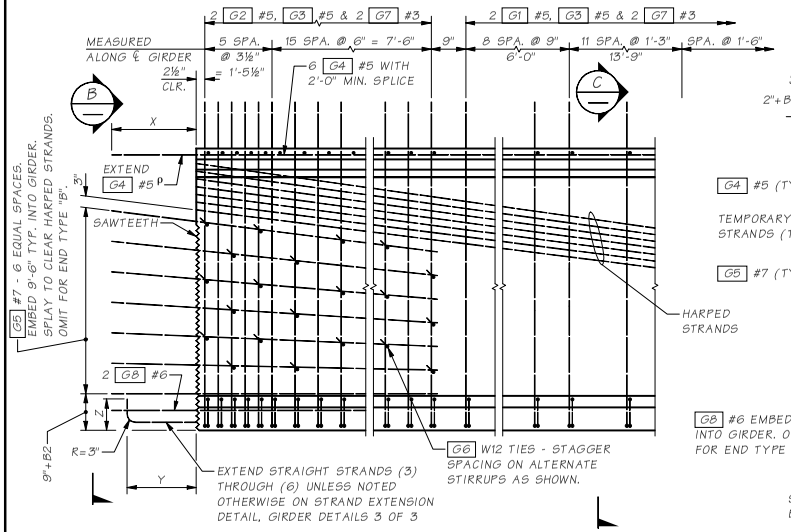

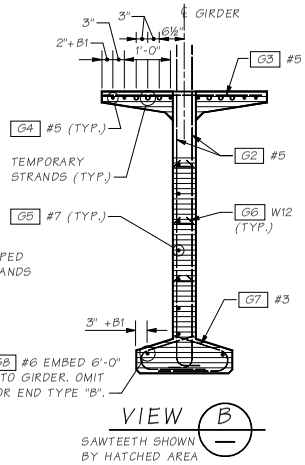

VIEW B

SAWTEETH SHOWN BY HATCHED AREA

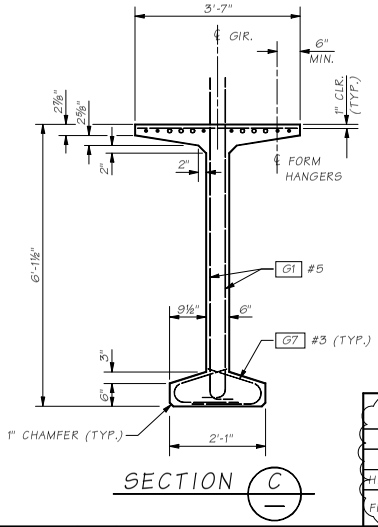

SECTION C

INTERMEDIATE DIAPHRAGM:
1/4 points of span for span lengths over 120'-0".
1/3 points of span for span lengths 80'-0" to 120'-0"
1/2 points of span for span lengths less than 40'-0" to 80'-0"

Diaphragm Type	END TYPE	BEARING RECESS	X	Y	Z	SAWTEETH
End Diaph. on Girder	A	YES	1'-10"	1'-6"	9"	YES
"L" Abutment	B	YES	0"	0"	0"	NO
Hinge Diaph. @ Intermediate Pier	C	NO	1'-10"	1'-6"	9"	YES
Fixed Diaph. @ Intermediate Pier	D	NO	1'-10"	ALT. 1 OR ALT. 2 STRAND EXTENSION		YES

TYPICAL END ELEVATION

END TYPE C SHOWN, OTHER END TYPES SIMILAR.

ρ FIELD BENDING REQUIRED TO OBTAIN 1½" CONCRETE COVER AT PAVEMENT SEAT.

(stirrup spacing shall be determined by the designer)

FOR END TYPE "C"

ENDS AHEAD ON STATION
G5 BARS LEFT OF ℄
B1 = 0" (G4 , G8)
B2 = 0" (G5)

ENDS BACK ON STATION
G5 BARS RIGHT OF ℄
B1 = 1½"(G4 , G8)
B2 = 3" (G5)

MARK	LOCATION	SIZE	
G1	GIRDER STIRRUPS	5	
G2	GIRDER END STIRRUPS	5	
G3	GIRDER TOP FLANGE	5	STR.
G4	GIRDER LONGIT. FULL LENGTH	5	STR.
G5	GIRDER END LONGIT.	7	STR.
G6	GIRDER END TIES	W12δ	
G7β	GIRDER BOT. FLANGE TIES	3	
G8	GIRDER END LONGIT.	6	STR.
G9β	GIRDER BOT. FLANGE TIES	3	
G10β	GIRDER BOT. FLANGE TIES	3	

BENDING DIAGRAM (ALL DIMENSIONS ARE OUT TO OUT)
NOTE: FOR DIMENSION "A", SEE "GIRDER SCHEDULE"

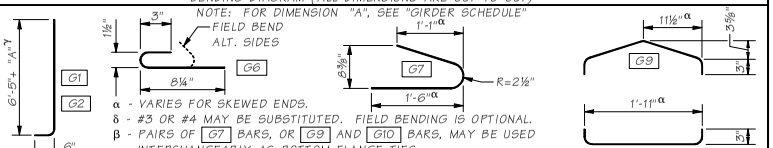

α - VARIES FOR SKEWED ENDS.
δ - #3 OR #4 MAY BE SUBSTITUTED. FIELD BENDING IS OPTIONAL.
β - PAIRS OF G7 BARS, OR G9 AND G10 BARS, MAY BE USED INTERCHANGEABLY AS BOTTOM FLANGE TIES.
γ - SHALL BE CHECKED FOR EFFECT OF VERTICAL CURVE.

Bridge Design Engr.	M:\STANDARDS\Girders\I-Girders\W74G\W74G1.man				REGION NO.	STATE	FED. AID PROJ. NO.	SHEET NO.	TOTAL SHEETS
Supervisor					10	WASH.			
Designed By					JOB NUMBER				
Checked By									
Detailed By									
Bridge Projects Engr.									
Prelim. Plan By									
Architect/Specialist	DATE	REVISION	BY	APP'D					

BRIDGE AND STRUCTURES OFFICE

Washington State Department of Transportation

STANDARD PRESTRESSED CONCRETE GIRDERS

W74G GIRDER DETAILS 1 OF 3

BRIDGE SHEET NO. / SHEET / OF / SHEETS

SR / JOB NO. 5.6-A6-1

Fri Feb 01 13:11:46 2008

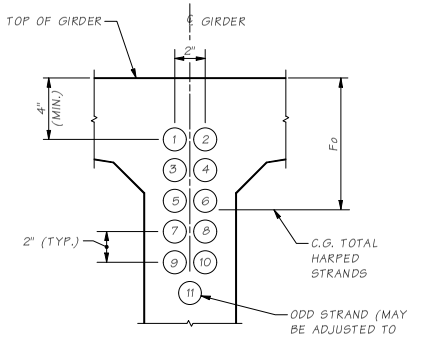

STRAND PATTERN AT GIRDER END

HARPED STRAND LOCATION SEQUENCE SHALL BE AS SHOWN (1), (2) ETC.

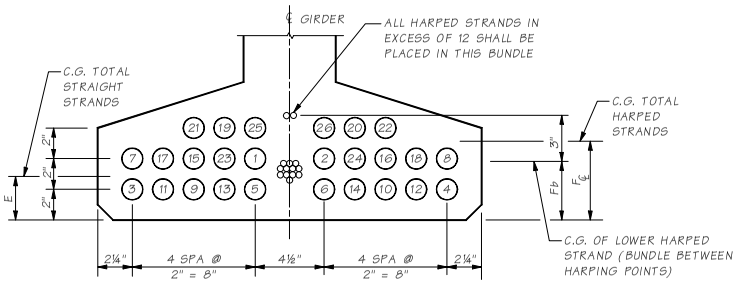

STRAND PATTERN AT ℄ SPAN

STRAIGHT STRAND LOCATION SEQUENCE SHALL BE AS SHOWN (1), (2) ETC.

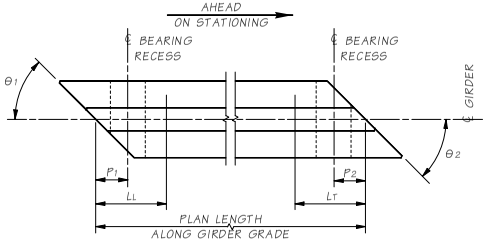

NOTE:
LL AND LT ARE SHIPPING SUPPORT LOCATIONS AT LEADING AND TRAILING ENDS, RESPECTIVELY.

GIRDER SCHEDULE

DIMENSION "A" AT ℄ BEARINGS = BASED ON GIRDER DEFLECTION = "D" AT TIME OF SLAB PLACEMENT (120 DAYS)

SPAN	GIRDER	END 1 TYPE	END 2 TYPE	L	LL	LT	θ1 (DEG.)	θ2 (DEG.)	P1	P2	PLAN LENGTH (ALONG GIRDER GRADE)	MIN. CONC. COMP. STRENGTH @ FINAL F'C (KSI)	MIN. CONC. COMP. STRENGTH @ RELEASE F'CI (KSI)	HARPED NO. OF STRANDS	HARPED JACKING FORCE (KIPS)	STRAIGHT NO. OF STRANDS	STRAIGHT JACKING FORCE (KIPS)	TEMPORARY NO. OF STRANDS	TEMPORARY JACKING FORCE (KIPS)	LOCATION OF C.G. STRANDS E	LOCATION OF C.G. STRANDS F℄	LOCATION OF C.G. STRANDS Fb	LOCATION OF C.G. STRANDS Fo	C	D @ 40 DAYS	D @ 120 DAYS	Ld
-	-	-	-	-	-	-	-	-	-	-	-	-	-	-	-	-	-	-	-	-	-	-	-	-	-	-	-	-
-	-	-	-	-	-	-	-	-	-	-	-	-	-	-	-	-	-	-	-	-	-	-	-	-	-	-	-	-

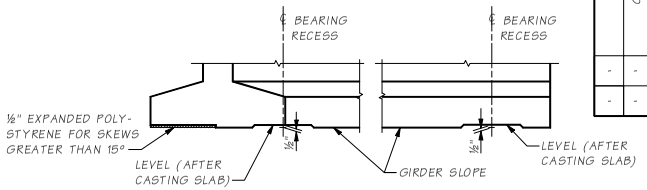

ELEVATION

NOTE:
Dimensions shall be shown in Imperial units to the nearest 1/8th inch.

The number of harped strands should not exceed ½ of the number of straight strands.

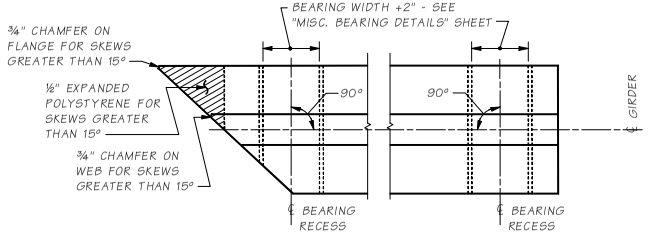

PLAN BEARING RECESS AND BOTTOM FLANGE SPALL PROTECTION

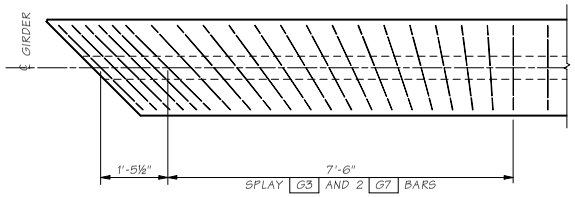

TRANSVERSE REINFORCING SKEWED ENDS

ONLY TRANSVERSE REINF. SHOWN

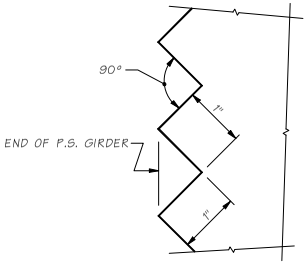

SAWTOOTH DETAILS

SAWTEETH ARE FULL WIDTH - USE SAWTOOTH KEYS FROM BOTTOM OF BOTTOM FLANGE TO BOTTOM OF LOWEST HARPED STRAND AS WELL AS TOP FLANGE ADJACENT TO HARPED STRANDS AS SHOWN IN VIEW B - GIRDER DETAILS 1 OF 3

Bridge Design Engr.	M:\STANDARDS\Girders\I-Girders\W74G\W74G2.man										
Supervisor											
Designed By											
Checked By											
Detailed By											
Bridge Projects Engr.											
Prelim. Plan By											
Architect/Specialist	DATE	REVISION	BY	APP'D							

REGION NO.	STATE	FED. AID PROJ. NO.	SHEET NO.	TOTAL SHEETS
10	WASH.			
JOB NUMBER				

BRIDGE AND STRUCTURES OFFICE

Washington State Department of Transportation

STANDARD PRESTRESSED CONCRETE GIRDERS

W74G GIRDER DETAILS 2 OF 3

BRIDGE SHEET NO. | SHEET | OF | SHEETS

SR | JOB NO. | SHEET

5.6-A6-2

Fri Feb 01 13:11:53 2008

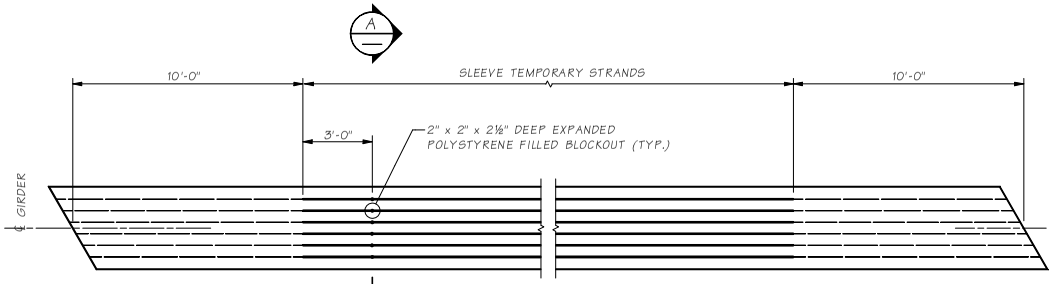

PLAN
PRETENSIONED TEMPORARY TOP STRANDS

POST-TENSIONED TEMPORARY TOP STRANDS SIMILAR, EXCEPT 10'-0" LENGTH OF BONDING OCCURS AT ONE END ONLY. THE OPPOSING END IS ANCHORED WITH PLATES AND STRAND CHUCKS.

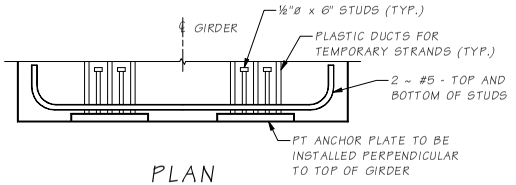

PLAN
TEMPORARY STRAND POST-TENSIONED ALTERNATE

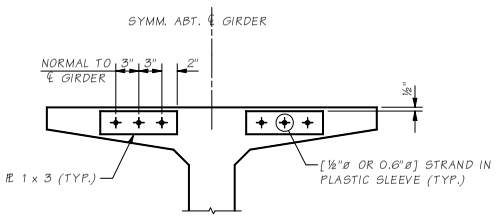

END VIEW
TEMPORARY STRAND POST-TENSIONED ALTERNATE

ADJUST G4 BARS TO CLEAR THE STEEL PLATE

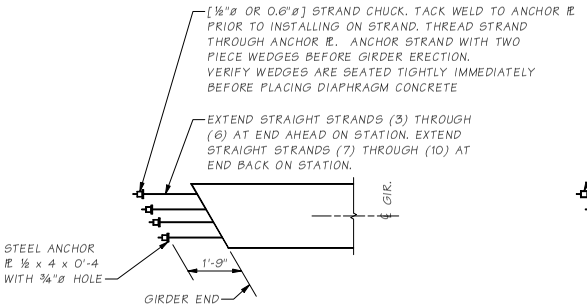

ALTERNATE #1

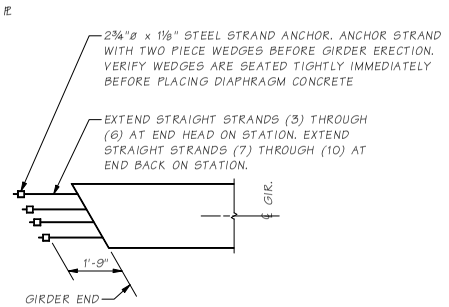

ALTERNATE #2

STRAND EXTENSION DETAIL

Number of extended strands shall be determined by the designer.

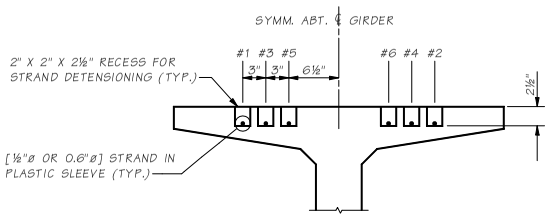

SECTION A

Bridge Design Engr.	M:\STANDARDS\Girders\I-Girders\W74G\W74G3.man				REGION NO.	STATE	FED. AID PROJ. NO.	SHEET NO.	TOTAL SHEETS
Supervisor					10	WASH.			
Designed By					JOB NUMBER				
Checked By									
Detailed By									
Bridge Projects Engr.									
Prelim Plan By									
Architect/Specialist	DATE	REVISION	BY	APP'D					

BRIDGE AND STRUCTURES OFFICE

Washington State Department of Transportation

STANDARD PRESTRESSED CONCRETE GIRDERS

W74G GIRDER DETAILS 3 OF 3

BRIDGE SHEET NO. / SHEET / OF / SHEETS

SR ___ JOB NO. ___ SHEET 3

5.6-A6-3

Fri Feb 01 13:11:59 2008

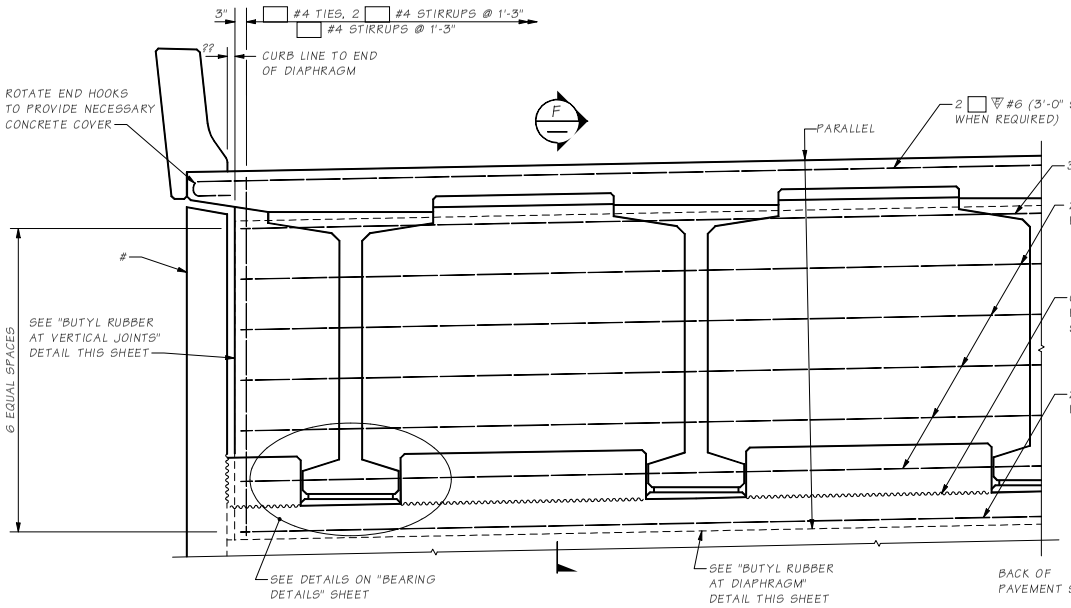

ELEVATION END DIAPHRAGM

DIMENSIONS ARE ALONG DIAPHRAGM

\# If ground line is less than 2'-0" minimum below the bottom of girder at front face of abutment a curtain wall shall be provided.

TEMPORARY STRAND CUTTING SEQUENCE

1. ERECT AND BRACE GIRDERS.
2. REMOVE EXPANDED POLYSTYRENE IN 2" x 2" RECESSES IN TOP FLANGE OF GIRDERS.
3. CUT STRAND AND PLASTIC SLEEVE IN 2" x 2" RECESS.
4. REMOVE ALL MOISTURE IN RECESS PRIOR TO FILLING RECESS WITH GROUT.
5. CAST INTERMEDIATE & END DIAPHRAGMS.

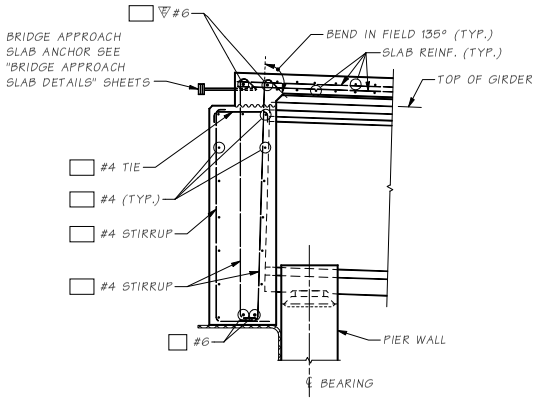

SECTION F

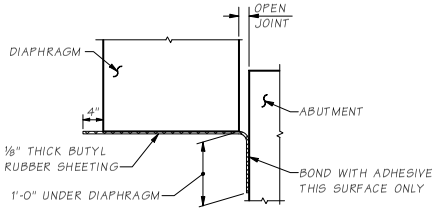

ELEVATION BUTYL RUBBER AT DIAPHRAGM

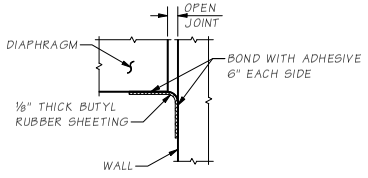

PLAN BUTYL RUBBER AT VERTICAL JOINTS

NOTE:
GIRDERS SHALL BE HELD RIGIDLY IN PLACE WHEN DIAPHRAGMS ARE PLACED.

Bridge length	Open Joint
L ≤ 200'	** = 1.5"
200' < L ≤ 300'	** = 2.0"
300' < L ≤ 400'	** = 2.5"
L > 400'	Special design

* Revise based on size of Open Joint

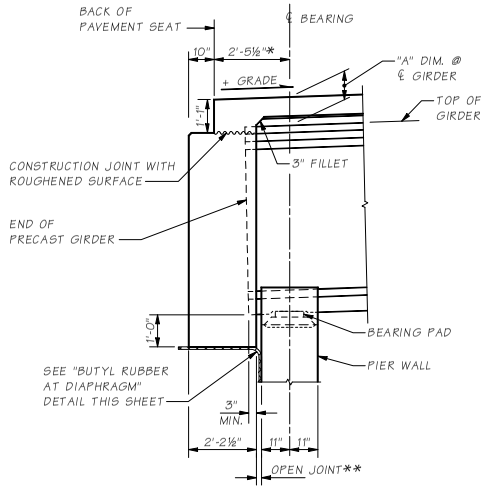

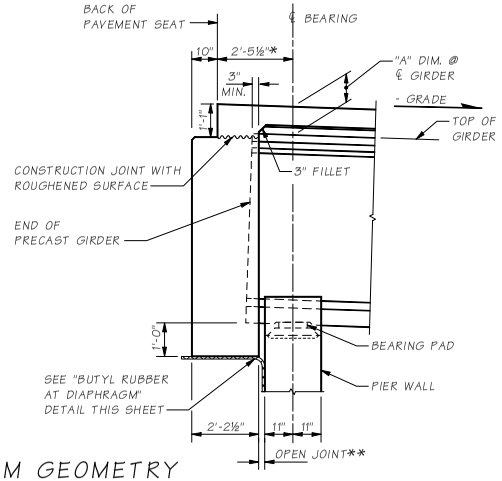

END DIAPHRAGM GEOMETRY

SEE "GIRDER DETAILS" SHEET FOR DIMENSION "A".
ALL LONGITUDINAL DIMENSIONS ARE NORMAL TO SKEW.

Bridge Design Engr.	M:\STANDARDS\Girders\I-Girders\W74G\W74G_END_DIA_ON_GIR.MAN				REGION NO.	STATE	FED. AID PROJ. NO.	SHEET NO.	TOTAL SHEETS
Supervisor					10	WASH.			
Designed By					JOB NUMBER				
Checked By									
Detailed By									
Bridge Projects Engr.									
Prelim. Plan By									
Architect/Specialist	DATE	REVISION	BY	APP'D					

BRIDGE AND STRUCTURES OFFICE

Washington State Department of Transportation

STANDARD PRESTRESSED CONCRETE GIRDERS

W74G END DIAPHRAGM ON GIRDER DETAILS

BRIDGE SHEET NO. | SHEET | OF | SHEETS

SR | JOB NO. | SHEET

5.6-A6-4

Fri Feb 01 13:12:04 2008

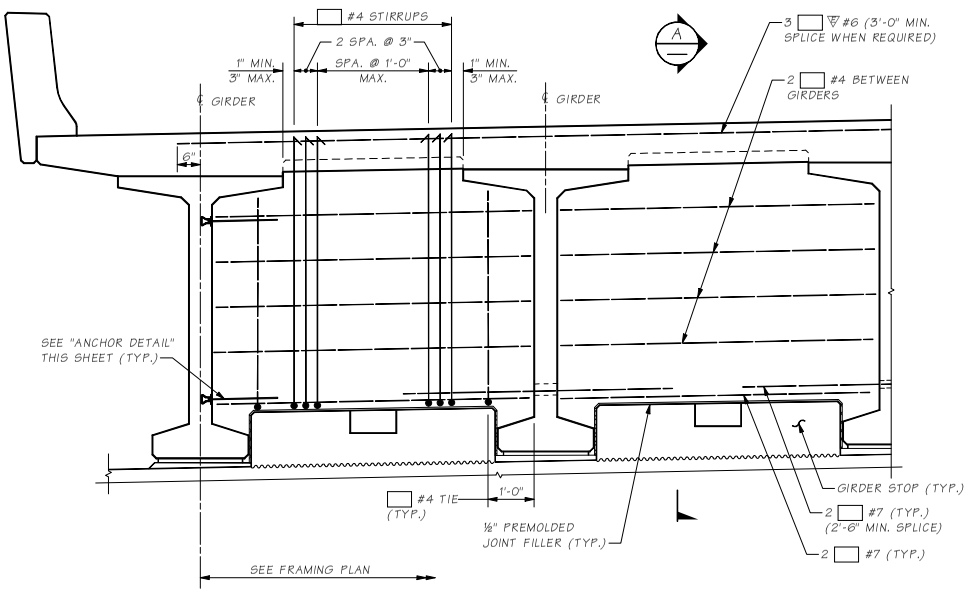

ELEVATION END DIAPHRAGM

DIMENSIONS ARE ALONG DIAPHRAGM

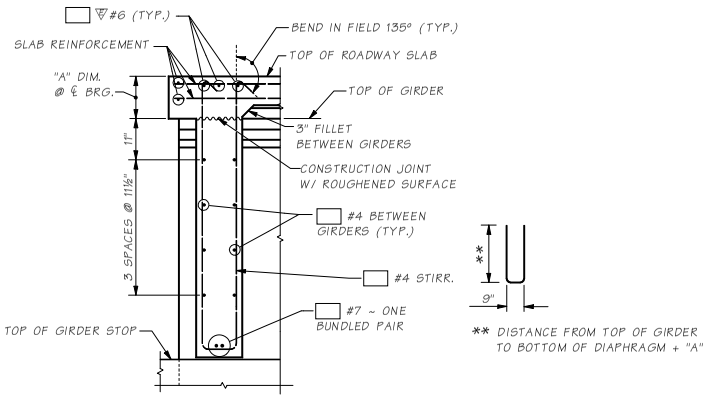

SECTION A

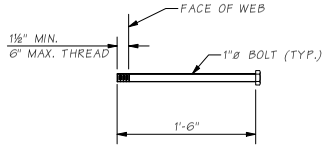

ANCHOR DETAIL

ASTM A-307

TEMPORARY STRAND CUTTING SEQUENCE

1. ERECT AND BRACE GIRDERS.
2. REMOVE EXPANDED POLYSTYRENE IN 2" x 2" RECESSES IN TOP FLANGE OF GIRDERS.
3. CUT STRAND AND PLASTIC SLEEVE IN 2" x 2" RECESS.
4. REMOVE ALL MOISTURE IN RECESS PRIOR TO FILLING RECESS WITH GROUT.
5. CAST INTERMEDIATE & END DIAPHRAGMS.

NOTE:

GIRDERS SHALL BE HELD RIGIDLY IN PLACE WHEN DIAPHRAGMS ARE PLACED. REINFORCING BAR SHALL BE THREADED THROUGH HOLES IN GIRDERS PRIOR TO PLACING OF EXTERIOR GIRDERS. SEE "GIRDER DETAILS" SHEET FOR DIMENSION "A".

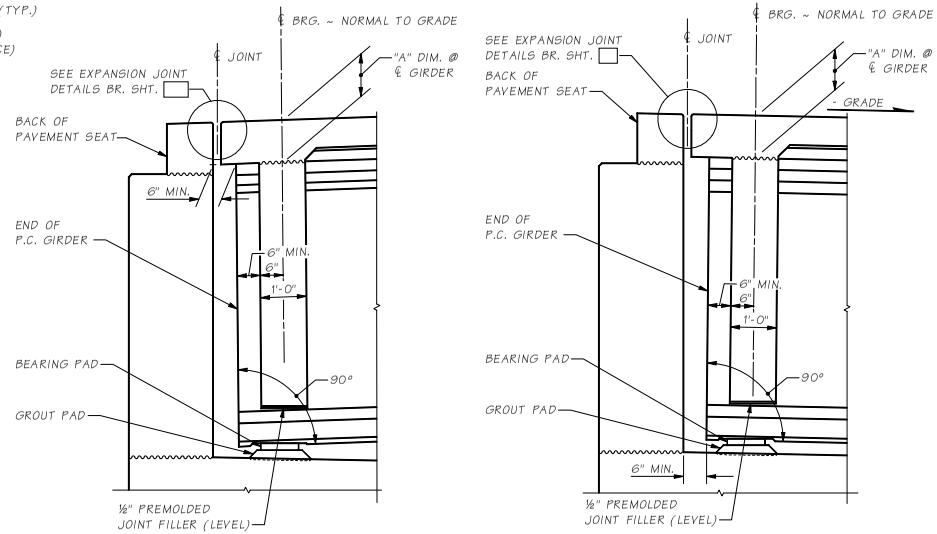

ROADWAY EXPANSION JOINT AT END PIERS

LONGITUDINAL DIMENSIONS ARE NORMAL TO SKEW.
GIRDER STOP NOT SHOWN FOR CLARITY.

Bridge Design Engr.	M:\STANDARDS\Girders\I-Girders\W74G\W74G_ABUT_PIER_DIAPH_DET.MAN				REGION NO.	STATE	FED. AID PROJ. NO.	SHEET NO.	TOTAL SHEETS
Supervisor					10	WASH			
Designed By					JOB NUMBER				
Checked By									
Detailed By									
Bridge Projects Engr.									
Prelim Plan By									
Architect/Specialist	DATE	REVISION	BY	APP'D					

BRIDGE AND STRUCTURES OFFICE

Washington State Department of Transportation

STANDARD PRESTRESSED CONCRETE GIRDERS

W74G ABUTMENT TYPE PIER DIAPHRAGM DETAILS

BRIDGE SHEET NO. SHEET OF SHEETS

SR ____ JOB NO. ____ SHEET

5.6-A6-5

Fri Feb 01 13:12:15 2008

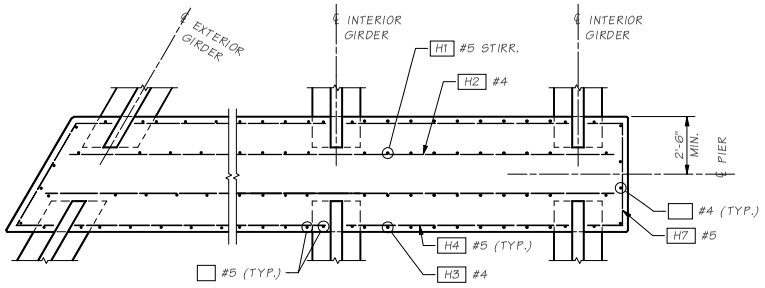

SECTION B

ELEVATION AT TOP OF OAK BLOCK

GIRDER	PIER ?	
	BACK STATION	AHEAD STATION

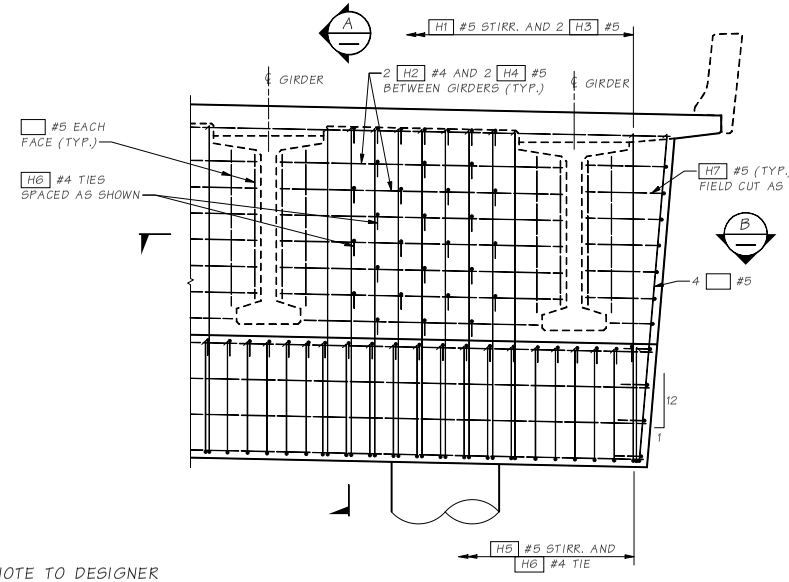

ELEVATION

NOTE TO DESIGNER

The actual bar size and spacing shall be determined by the designer.

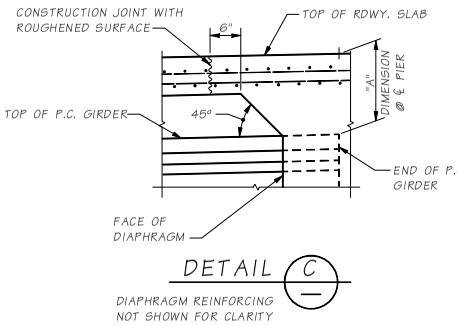

DETAIL C

DIAPHRAGM REINFORCING NOT SHOWN FOR CLARITY

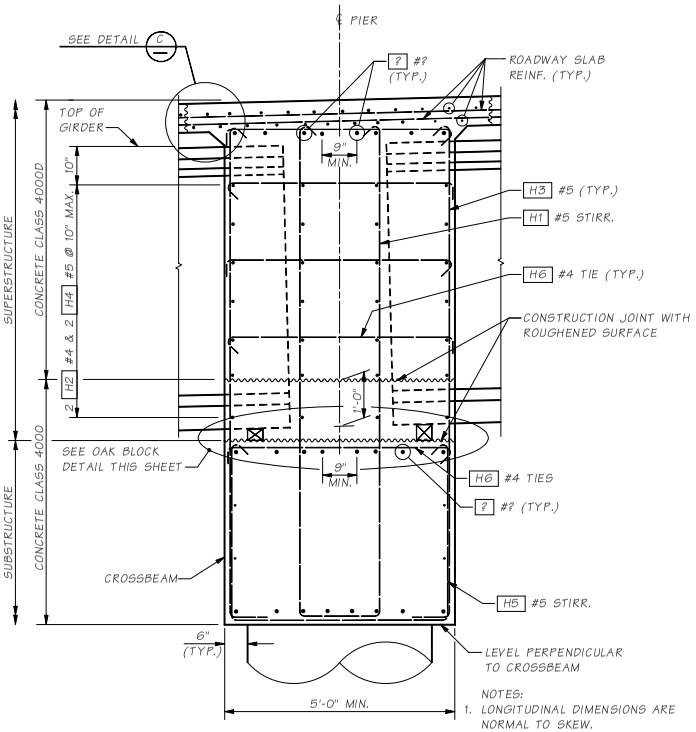

SECTION A

NOTES:
1. LONGITUDINAL DIMENSIONS ARE NORMAL TO SKEW.
2. FOR CONCRETE PLACEMENT PROCEDURE SEE "SUPERSTRUCTURE CONSTRUCTION SEQEUNCE" SHEET.

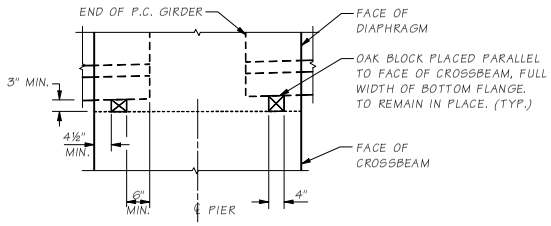

OAK BLOCK DETAIL

LONGITUDINAL DIMENSIONS ARE NORMAL TO SKEW

Bridge Design Engr.	M:\STANDARDS\Girders\I-Girders\W74G\W74G_FIX_FLUSH_FACE_INTER_PIER_DIAPH_DET.MAN				REGION NO.	STATE	FED. AID PROJ. NO.	SHEET NO.	TOTAL SHEETS
Supervisor					10	WASH			
Designed By									
Checked By					JOB NUMBER				
Detailed By									
Bridge Projects Engr.									
Prelim Plan By									
Architect/Specialist	DATE	REVISION	BY	APP'D					

Fri Feb 01 13:12:33 2008

BRIDGE AND STRUCTURES OFFICE

Washington State Department of Transportation

STANDARD PRESTRESSED CONCRETE GIRDERS

W74G FIXED FLUSH-FACE DIAPHRAGM AT INTERMEDIATE PIER DETAILS

BRIDGE SHEET NO.

SHEET OF SHEETS

SHEET

JOB NO.

SR 5.6-A6-6

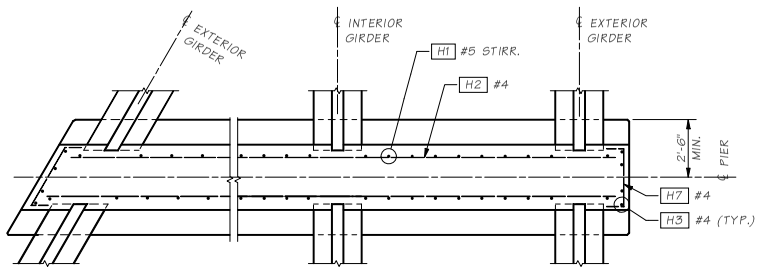

SECTION B

ELEVATION AT TOP OF OAK BLOCK

GIRDER	PIER ?	
	BACK STATION	AHEAD STATION

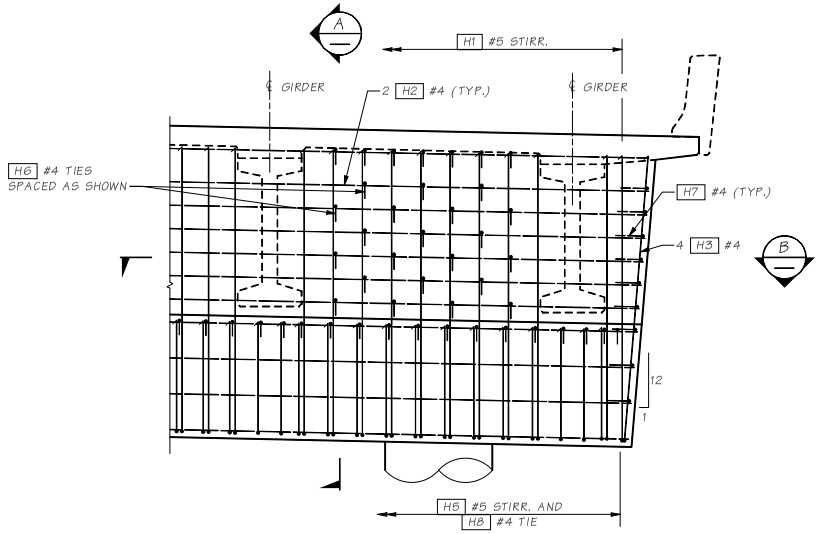

ELEVATION

NOTE TO DESIGNER

The actual bar size and spacing shall be determined by the designer.

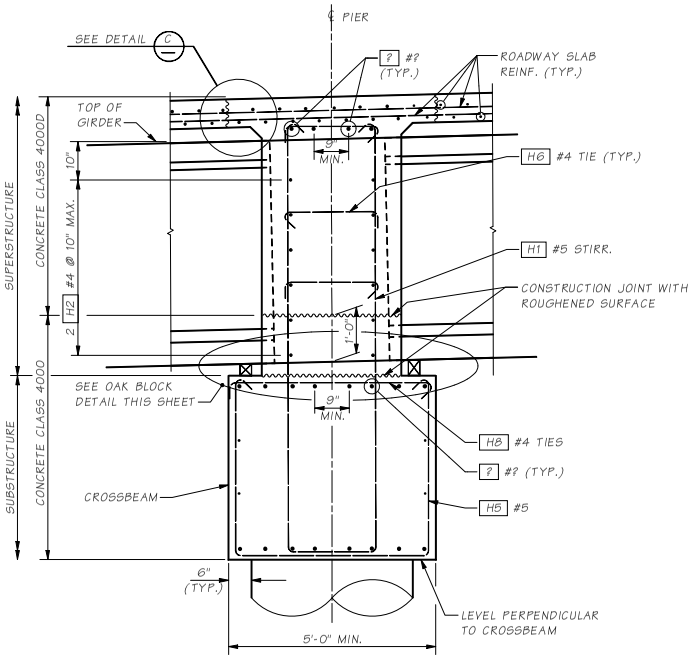

SECTION A

NOTES:
1. LONGITUDINAL DIMENSIONS ARE NORMAL TO SKEW.
2. FOR CONCRETE PLACEMENT PROCEDURE SEE "SUPERSTRUCTURE CONSTRUCTION SEQEUNCE" SHEET.

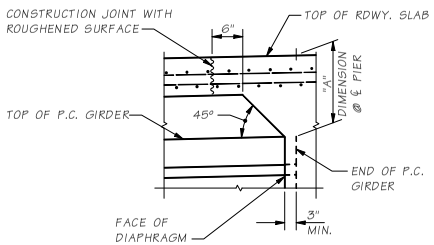

DETAIL C

DIAPHRAGM REINFORCING NOT SHOWN FOR CLARITY

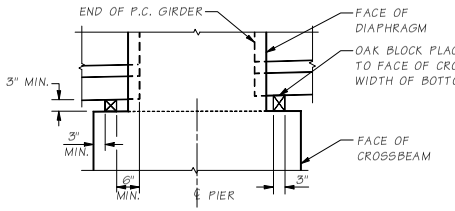

OAK BLOCK DETAIL

LONGITUDINAL DIMENSIONS ARE NORMAL TO SKEW

Bridge Design Engr.	M:\STANDARDS\Girders\I-Girders\W74G\W74G_FIX_RECESSED_FACE_INTER_PIER_DIAPH_DET.MAN								
Supervisor					REGION NO.	STATE	FED. AID PROJ. NO.	SHEET NO.	TOTAL SHEETS
Designed By					10	WASH.			
Checked By					JOB NUMBER				
Detailed By									
Bridge Projects Engr.									
Prelim. Plan By									
Architect/Specialist	DATE	REVISION	BY	APP'D					

BRIDGE AND STRUCTURES OFFICE

Washington State Department of Transportation

STANDARD PRESTRESSED CONCRETE GIRDERS

W74G FIXED RECESSED-FACE DIAPHRAGM AT INTERMEDIATE PIER DETAILS

BRIDGE SHEET NO. SHEET OF SHEETS

SR JOB NO. SHEET 5.6-A6-7

Fri Feb 01 13:12:47 2008

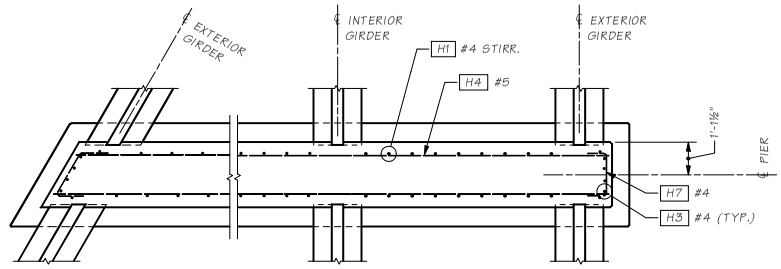

SECTION B

ELEVATION AT TOP OF OAK BLOCK

GIRDER	PIER ?	
	BACK STATION	AHEAD STATION

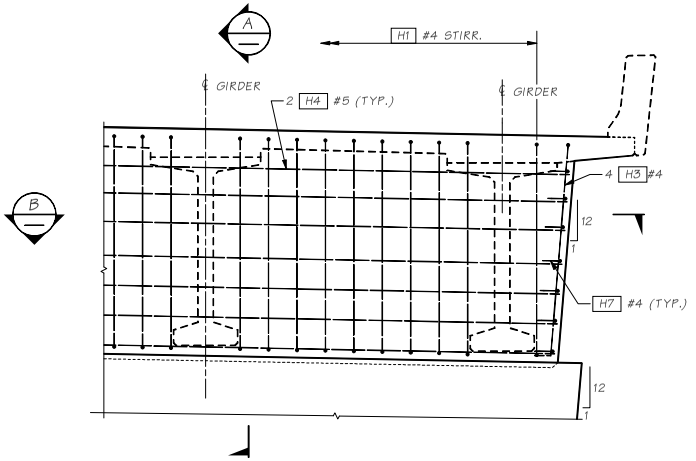

ELEVATION

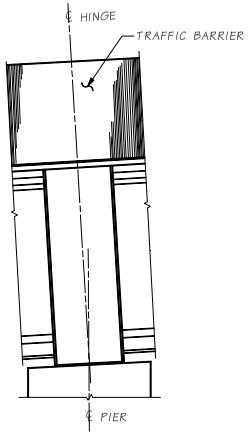

END VIEW
HINGE DIAPHRAGM

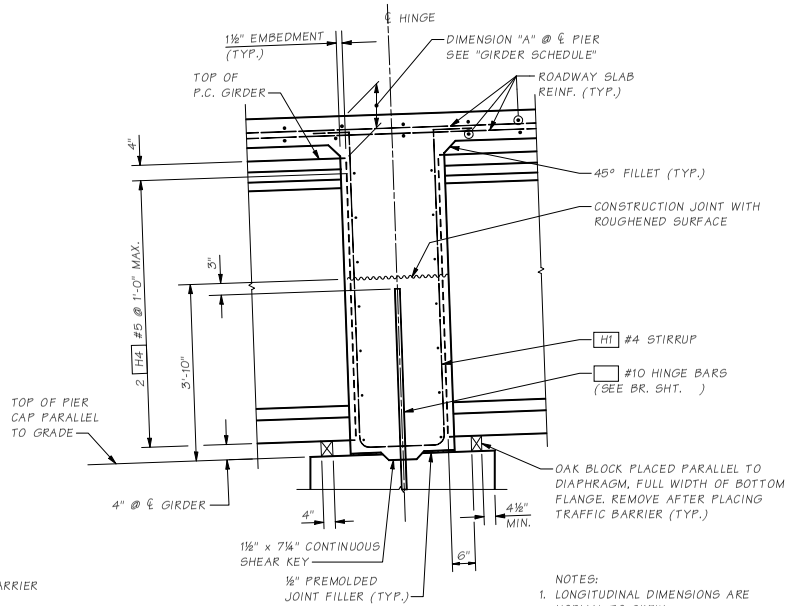

SECTION A

NOTES:
1. LONGITUDINAL DIMENSIONS ARE NORMAL TO SKEW.
2. FOR CONCRETE PLACEMENT PROCEDURE SEE "SUPERSTRUCTURE CONSTRUCTION SEQEUNCE" SHEET.
3. EXTENDED STRANDS AND GIRDER REINFORCING NOT SHOWN FOR CLARITY.

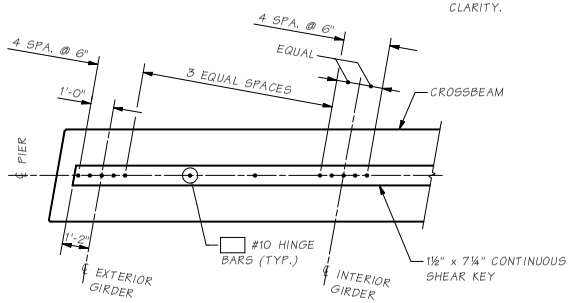

HINGE BAR PLAN

Hinge bar plan is shown for designer. The actual hinge bars detail shall be shown on the crossbeam details sheet.

Bridge Design Engr.	M:\STANDARDS\Girders\I-Girders\W74G\W74G_HINGE_DIAPHRAGM_INTER_PIER_DIAPH_DET.MAN								
Supervisor					REGION NO.	STATE	FED. AID PROJ. NO.	SHEET NO.	TOTAL SHEETS
Designed By					10	WASH.			
Checked By					JOB NUMBER				
Detailed By									
Bridge Projects Engr.									
Prelim Plan By									
Architect/Specialist	DATE	REVISION	BY	APP'D					

BRIDGE AND STRUCTURES OFFICE

Washington State Department of Transportation

STANDARD PRESTRESSED CONCRETE GIRDERS

W74G HINGE DIAPHRAGM AT INTERMEDIATE PIER DETAILS

BRIDGE SHEET NO.
SHEET OF SHEETS

SR JOB NO. SHEET
5-6-A6-8

Fri Feb 01 13:12:58 2008

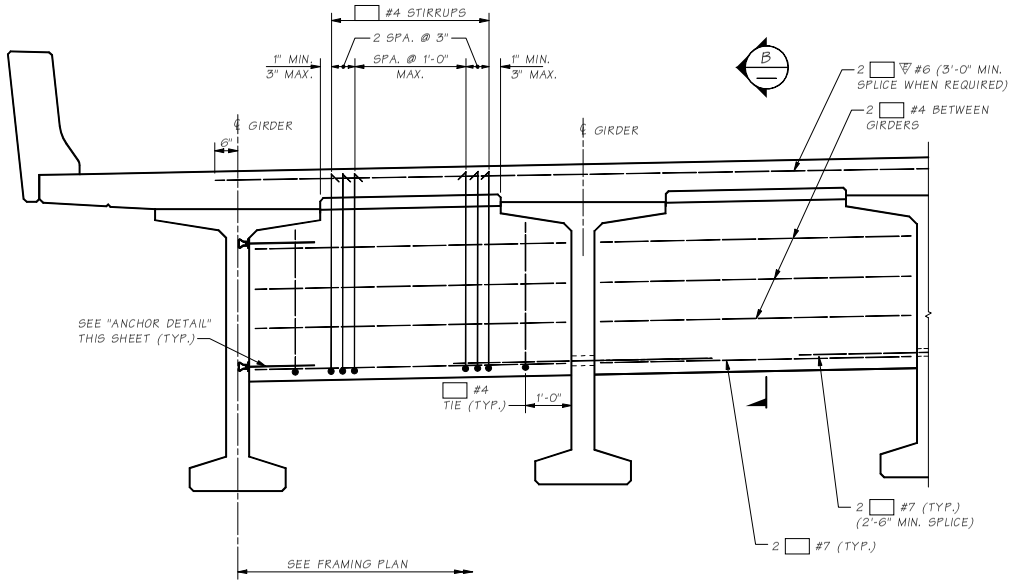

ELEVATION
INTERMEDIATE DIAPHRAGM

DIMENSIONS ARE ALONG DIAPHRAGM

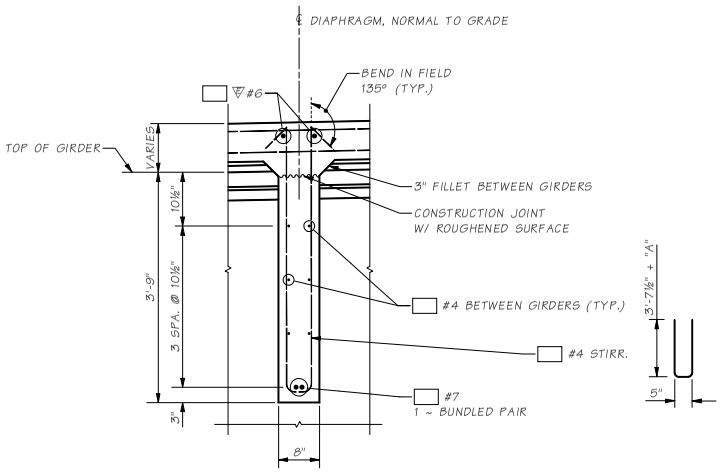

SECTION B

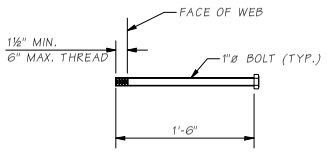

ANCHOR DETAIL

ASTM A-307

NOTE:

GIRDERS SHALL BE HELD RIGIDLY IN PLACE WHEN DIAPHRAGMS ARE PLACED. REINFORCING BAR SHALL BE THREADED THROUGH HOLES IN GIRDERS PRIOR TO PLACING OF EXTERIOR GIRDERS. SEE "GIRDER DETAILS" SHEET FOR DIMENSION "A".

Bridge Design Engr.	M:\STANDARDS\Girders\I-Girders\W74G\W74G_INTER_DIAPHRAGM_DET.MAN									
Supervisor					REGION NO.	STATE	FED. AID PROJ. NO.		SHEET NO.	TOTAL SHEETS
Designed By					10	WASH.				
Checked By					JOB NUMBER					
Detailed By										
Bridge Projects Engr.										
Prelim. Plan By										
Architect/Specialist	DATE	REVISION	BY	APP'D						

BRIDGE AND STRUCTURES OFFICE

Washington State Department of Transportation

STANDARD PRESTRESSED CONCRETE GIRDERS

W74G INTERMEDIATE DIAPHRAGM DETAILS

BRIDGE SHEET NO.

SHEET OF SHEETS

SR ___ JOB NO. ___ SHEET ___

5.6-A6-9

Fri Feb 01 13:13:10 2008

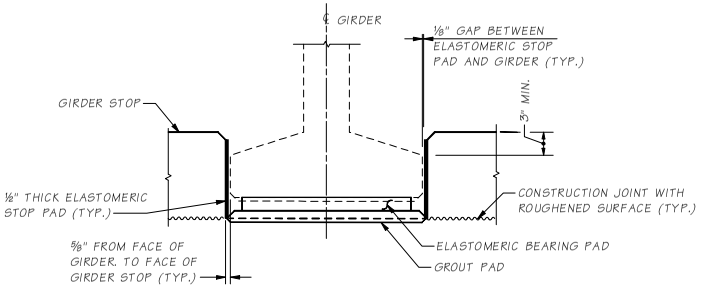

SECTION G

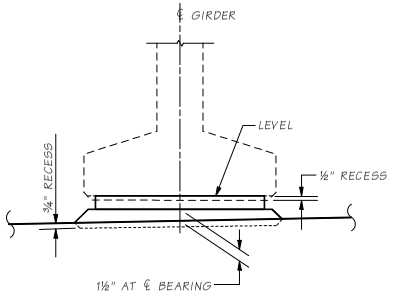

GROUT PAD ELEVATION

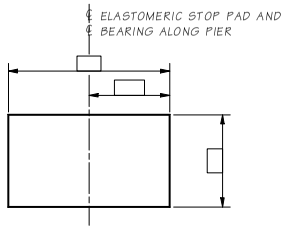

ELASTOMERIC STOP PAD

DUROMETER HARDNESS = 60

NOTE:

1. GIRDER STOPS SHALL BE CONSTRUCTED AFTER GIRDER PLACEMENT.
2. THE ELASTOMERIC STOP PADS SHALL BE CEMENTED TO GIRDER STOPS WITH APPROVED ADHESIVE.

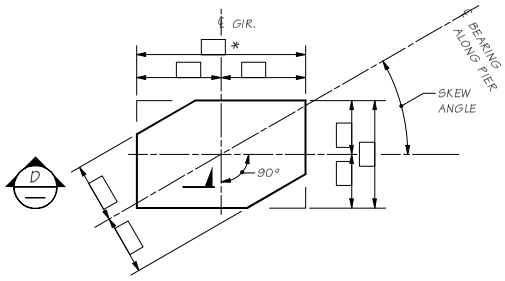

BEARING PAD

LAMINATED ELASTOMERIC BRIDGE PAD ☐ THICK (☐ SHIMS)

Skew angle shown at 30°.

* The edge of the bearing pad shall be set at 1" from the edge of the bottom flange.

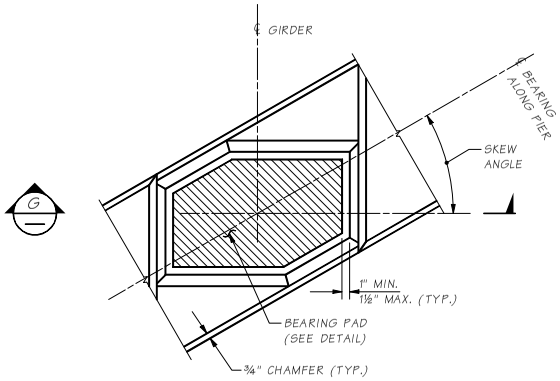

GROUT PAD DETAIL

Skew angle shown at 30°.

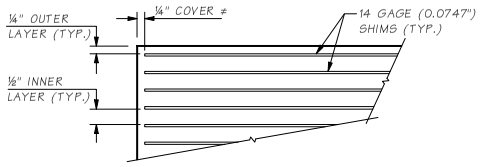

SECTION D

≠ 1/8" for pad thickness ≤ 3"
1/4" for 3" < pad thickness ≤ 7"
1/2" for pad thickness > 7"

BEARING DESIGN TABLE	
SERVICE - I LIMIT STATE	
DEAD LOAD REACTION	KIPS
LIVE LOAD REACTION (W/O IMPACT)	KIPS
UNLOADED HEIGHT	IN.
LOADED HEIGHT (DL)	IN.
DUROMETER HARDNESS	60

Bridge Design Engr.	M:\STANDARDS\Girders\I-Girders\W74G\W74G_MISC_BEARING_DET.MAN				REGION NO.	STATE	FED. AID PROJ. NO.	SHEET NO.	TOTAL SHEETS
Supervisor					10	WASH.			
Designed By					JOB NUMBER				
Checked By									
Detailed By									
Bridge Projects Engr.									
Prelim Plan By									
Architect/Specialist	DATE	REVISION	BY	APP'D					

BRIDGE AND STRUCTURES OFFICE

Washington State Department of Transportation

STANDARD PRESTRESSED CONCRETE GIRDERS

W74G MISCELLANEOUS BEARING DETAILS

BRIDGE SHEET NO.

SHEET OF SHEETS

SR ____ JOB NO. ____ SHEET ____

5.6-A6-10

Fri Feb 01 13:13:17 2008

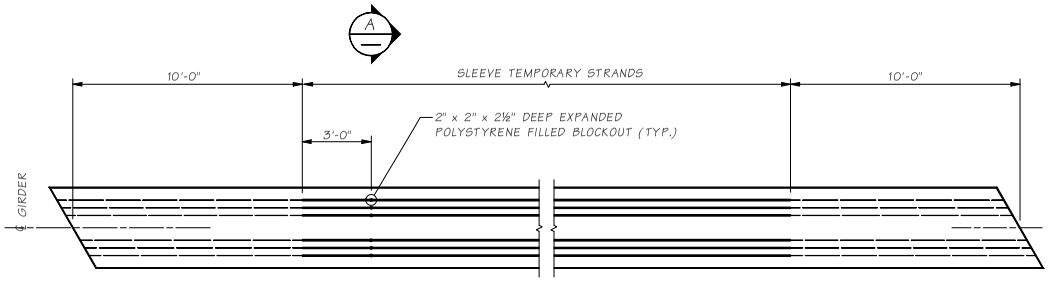

PLAN
PRETENSIONED TEMPORARY TOP STRANDS

POST-TENSIONED TEMPORARY TOP STRANDS SIMILAR, EXCEPT 10'-0" LENGTH OF BONDING OCCURS AT ONE END ONLY. THE OPPOSING END IS ANCHORED WITH PLATES AND STRAND CHUCKS.

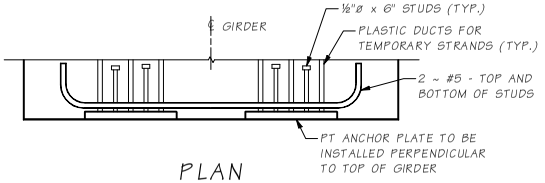

PLAN
TEMPORARY STRAND POST-TENSIONED ALTERNATE

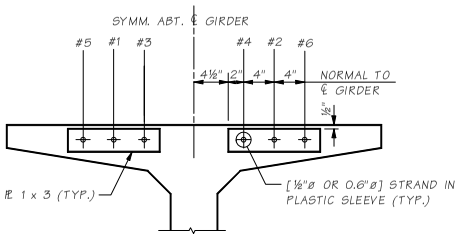

END VIEW
TEMPORARY STRAND POST-TENSIONED ALTERNATE

ADJUST G4 BARS TO CLEAR THE STEEL PLATE

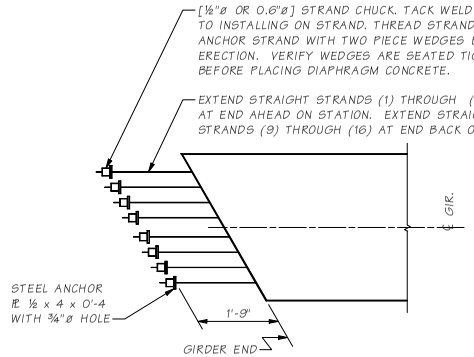

ALTERNATE #1

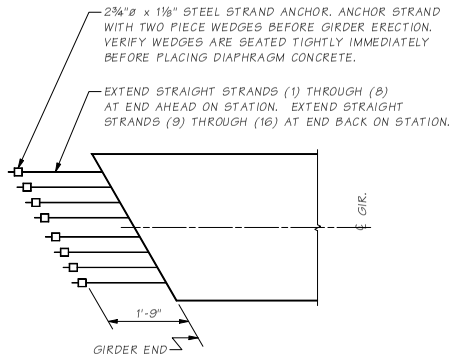

ALTERNATE #2

STRAND EXTENSION DETAIL

Number of extended strands shall be determined by the designer.

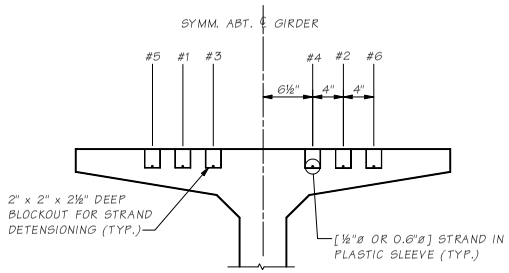

SECTION A

Bridge Design Engr.	M:\STANDARDS\Girders\WF I-Girders\WF Details\GIRDER DETAILS 3 OF 3.MAN				REGION NO.	STATE	FED. AID PROJ. NO.	SHEET NO.	TOTAL SHEETS
Supervisor					10	WASH			
Designed By					JOB NUMBER				
Checked By									
Detailed By									
Bridge Projects Engr.									
Prelim. Plan By									
Architect/Specialist	DATE	REVISION	BY	APPD					

BRIDGE AND STRUCTURES OFFICE

Washington State Department of Transportation

STANDARD PRESTRESSED CONCRETE GIRDERS

GIRDER DETAILS 3 OF 3

BRIDGE SHEET NO. SHEET OF SHEETS

SHEET JOB NO. SR 5.6-A7-1

Fri Jan 04 08:21:36 2008

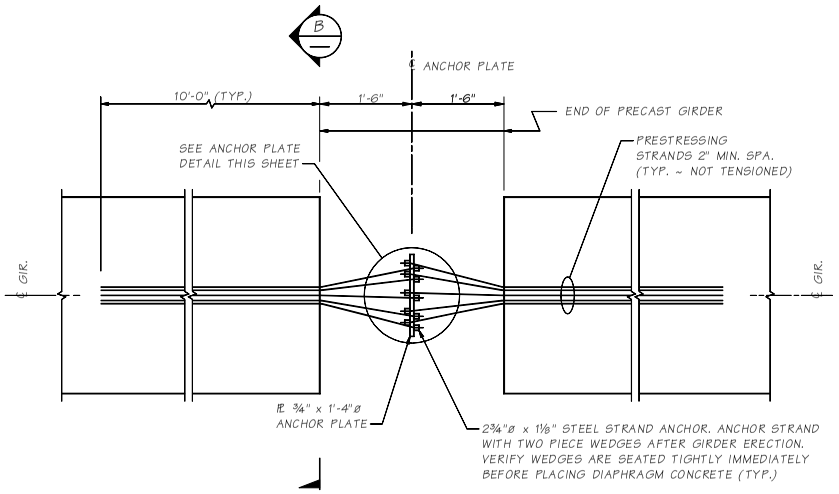

ADDITIONAL STRAND EXTENSION DETAIL

n = ??? TOTAL NUMBER OF ADDITIONAL EXTENDED STRANDS

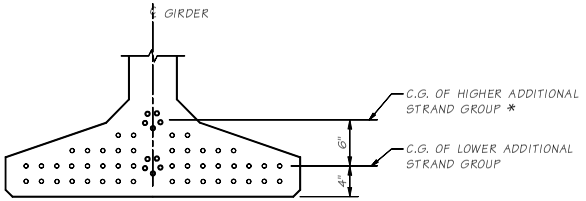

VIEW B

* ALL ADDITIONAL STRANDS IN EXCESS OF 5 SHALL BE PLACED IN THIS GROUP

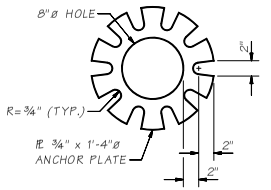

ANCHOR PLATE DETAIL

Bridge Design Engr.	M:\STANDARDS\Girders\WF I-Girders\WF Details\ADDITIONAL STRANDS.MAN				REGION NO.	STATE	FED. AID PROJ. NO.	SHEET NO.	TOTAL SHEETS
Supervisor					10	WASH.			
Designed By					JOB NUMBER				
Checked By									
Detailed By									
Bridge Projects Engr.									
Prelim. Plan By									
Architect/Specialist	DATE	REVISION	BY	APPD					

BRIDGE AND STRUCTURES OFFICE

Washington State Department of Transportation

STANDARD PRESTRESSED CONCRETE GIRDERS

ADDITIONAL EXTENDED STRANDS

BRIDGE SHEET NO.

SHEET OF SHEETS

SR JOB NO. SHEET

5.6-A7-2

Fri Jan 25 09:01:49 2008

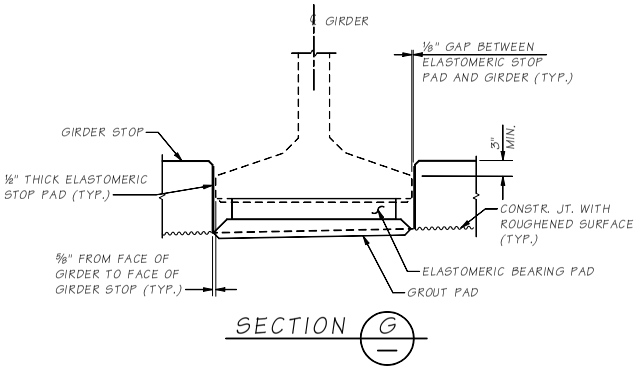

SECTION G

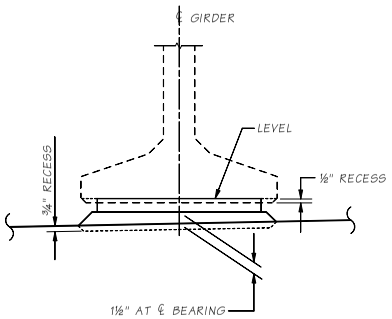

GROUT PAD ELEVATION

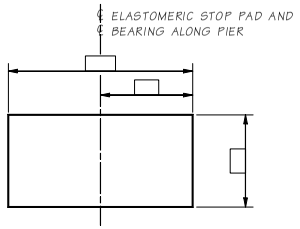

ELASTOMERIC STOP PAD

DUROMETER HARDNESS = 60

NOTE:

1. GIRDER STOPS SHALL BE CONSTRUCTED AFTER GIRDER PLACEMENT.
2. THE ELASTOMERIC STOP PADS SHALL BE CEMENTED TO GIRDER STOPS WITH APPROVED ADHESIVE.

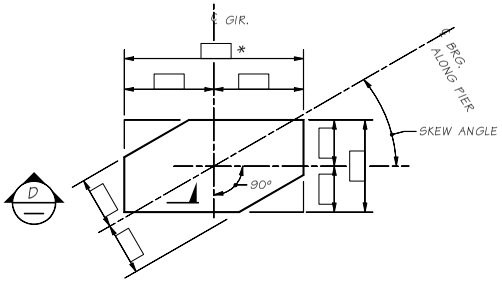

BEARING PAD

LAMINATED ELASTOMERIC BRIDGE PAD ☐ THICK (☐ SHIMS).

Skew angle shown at 30°.

* The edge of the bearing pad shall be set at 1" minimum to 6" maximum from the edge of the bottom flange.

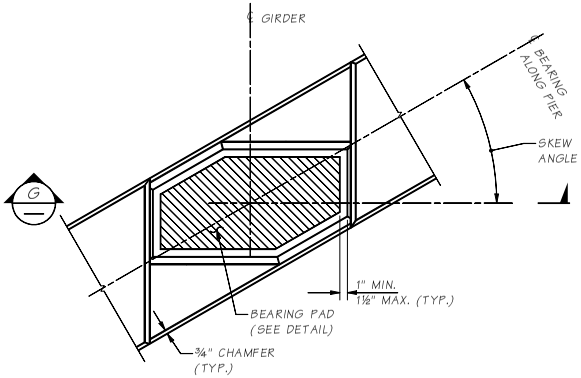

GROUT PAD DETAIL

Skew angle shown at 30°.

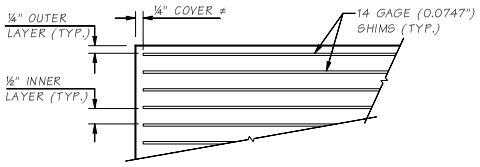

SECTION D

* ⅛" for pad thickness ≤ 3"
¼" for 3" < pad thickness ≤ 7"
½" for pad thickness > 7"

BEARING DESIGN TABLE	
SERVICE - I LIMIT STATE	
DEAD LOAD REACTION	KIPS
LIVE LOAD REACTION (W/O IMPACT)	KIPS
UNLOADED HEIGHT	IN.
LOADED HEIGHT (DL)	IN.
DUROMETER HARDNESS	60

Bridge Design Engr:	M:\STANDARDS\Girders\WF I-Girders\WF Details\MISC_BEARING_DET.MAN				REGION NO.	STATE	FED. AID PROJ. NO.	SHEET NO.	TOTAL SHEETS
Supervisor					10	WASH.			
Designed By					JOB NUMBER				
Checked By									
Detailed By									
Bridge Projects Engr.									
Prelim. Plan By									
Architect/Specialist	DATE	REVISION	BY	APP'D					

BRIDGE AND STRUCTURES OFFICE

Washington State Department of Transportation

STANDARD PRESTRESSED CONCRETE GIRDERS

MISCELLANEOUS BEARING DETAILS

BRIDGE SHEET NO.

SHEET OF SHEETS

SR JOB NO. SHEET

5.6-A7-3

Fri Jan 25 09:01:53 2008

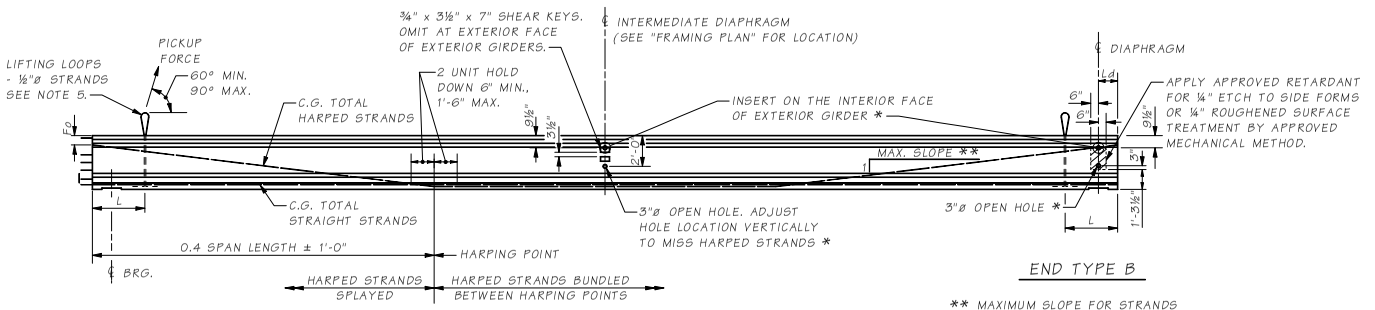

GIRDER ELEVATION

* OMIT HOLES AND PLACE INSERTS ON THE INTERIOR FACE OF EXTERIOR GIRDERS. PLACE HOLES AND INSERTS PARALLEL TO SKEW. INSERTS SHALL BE 1"ø BURKE HI-TENSILE, LANCASTER MALLEABLE, DAYTON-SUPERIOR F-62 FLARED THIN SLAB (1" x 4⅝") FERRULE INSERT OR APPROVED EQUAL. (TYP.)

** MAXIMUM SLOPE FOR STRANDS
6 : 1 FOR EACH ½"ø STRAND OR
8 : 1 FOR EACH 0.6"ø STRAND

NOTES

1. PLAN LENGTH SHALL BE INCREASED AS NECESSARY TO COMPENSATE FOR SHORTENING DUE TO PRESTRESS AND SHRINKAGE.
2. ALL PRETENSIONED AND TEMPORARY STRANDS SHALL BE [½"ø OR 0.6"ø] LOW RELAXATION STRANDS (AASHTO M203 GRADE 270.)
3. FOR END TYPES A, C AND D CUT ALL STRANDS FLUSH WITH THE GIRDER ENDS AND PAINT WITH AN APPROVED EPOXY RESIN, EXCEPT FOR EXTENDED STRANDS AS SHOWN. FOR END TYPE B CUT ALL STRANDS 1" BELOW CONCRETE SURFACE AND GROUT WITH AN APPROVED EPOXY GROUT.
4. THE TOP SURFACE OF THE GIRDER FLANGE SHALL BE ROUGHENED IN ACCORDANCE WITH SECTION 6-02.3(25)H OF THE STANDARD SPECIFICATIONS.
5. LIFTING EMBEDMENTS SHALL BE INSTALLED IN ACCORDANCE WITH SECTION 6-02.3(25)L OF THE STANDARD SPECIFICATIONS.
6. CAUTION SHALL BE EXERCISED IN HANDLING AND PLACING GIRDERS. ALL GIRDERS SHALL BE CHECKED BY THE CONTRACTOR TO ENSURE THAT THEY ARE BRACED ADEQUATELY TO PREVENT TIPPING AND TO CONTROL LATERAL BENDING DURING SHIPPING. ONCE ERECTED, ALL GIRDERS SHALL BE BRACED LATERALLY TO PREVENT TIPPING UNTIL THE DIAPHRAGMS ARE CAST AND CURED.
7. FORMS FOR BEARING PAD RECESSES SHALL BE CONSTRUCTED AND FASTENED IN SUCH A MANNER AS TO NOT CAUSE DAMAGE TO THE GIRDER DURING THE STRAND RELEASE OPERATION.
8. TEMPORARY STRANDS SHALL BE EITHER PRETENSIONED OR POST-TENSIONED IN ACCORDANCE WITH SECTION 6-02.3(25)L OF THE STANDARD SPECIFICATIONS. IF PRETENSIONED, THESE TEMPORARY STRANDS SHALL BE UNBONDED OVER ALL BUT THE END 10'-0" OF THE GIRDER LENGTH. AS AN ALTERNATE, TEMPORARY STRANDS MAY BE POST-TENSIONED ON THE SAME DAY THE PRETENSIONING IS RELEASED INTO THE GIRDER.

1/3 points of span for span lengths 80'-0" to 120'-0"
1/2 points of span for span lengths less than 40'-0" to 80'-0"
No intermediate diaphragm for span lengths 40'-0" or less.

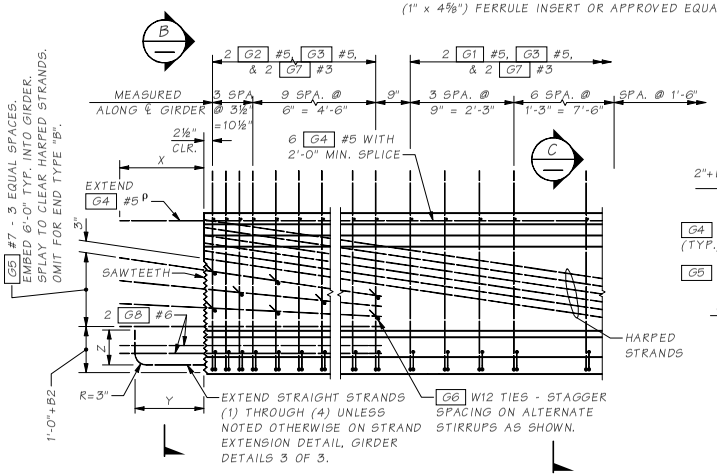

TYPICAL END ELEVATION

END TYPE C SHOWN, OTHER END TYPES SIMILAR.

ρ FIELD BENDING REQUIRED TO OBTAIN 1½" CONCRETE COVER AT PAVEMENT SEAT.

(stirrup spacing shall be determined by the designer)

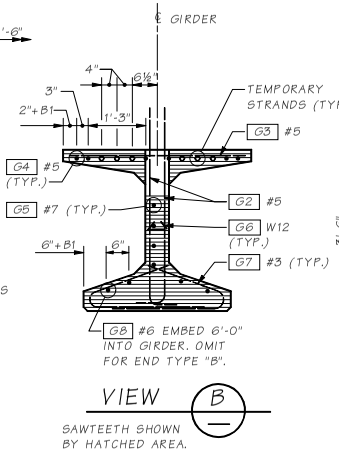

VIEW B

SAWTEETH SHOWN BY HATCHED AREA.

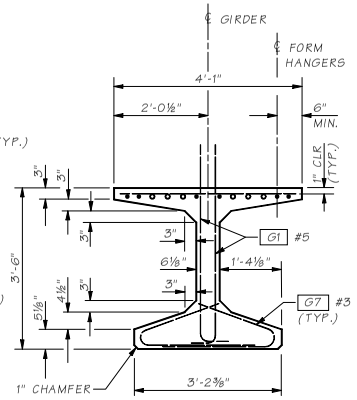

SECTION C

Diaphragm Type	END TYPE	BEARING RECESS	X	Y	Z	SAWTEETH
End Diaph. on Girder	A	YES	1'-10"	1'-6"	9"	YES
"L" Abutment	B	YES	0"	0"	0"	NO
Hinge Diaph. @ Interm. Pier	C	NO	1'-10"	1'-6"	9"	YES
Fixed Diaph. @ Interm. Pier	D	NO	1'-10"	ALT. 1 OR ALT. 2 STRAND EXTENSION		YES

FOR END TYPE "C"

ENDS AHEAD ON STATION
G5 BARS LEFT OF ℄
B1 = 0" (G4 , G8)
B2 = 0" (G5)
ENDS BACK ON STATION
G5 BARS RIGHT OF ℄
B1 = 1½"(G4 , G8)
B2 = 3" (G5)

MARK	LOCATION	SIZE	
G1	GIRDER STIRRUPS	5	
G2	GIRDER END STIRRUPS	5	
G3	GIRDER TOP FLANGE	5	STR.
G4	GIRDER LONGIT. FULL LENGTH	5	STR.
G5	GIRDER END LONGIT.	7	STR.
G6	GIRDER END TIES	W12δ	
G7β	GIRDER BOT. FLANGE TIES	3	
G8	GIRDER END LONGIT.	6	STR.
G9β	GIRDER BOT. FLANGE TIES	3	
G10β	GIRDER BOT. FLANGE TIES	3	

BENDING DIAGRAM (ALL DIMENSIONS ARE OUT TO OUT)
NOTE: FOR DIMENSION "A", SEE "GIRDER SCHEDULE"

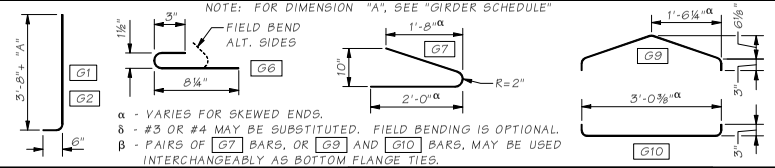

α - VARIES FOR SKEWED ENDS.
δ - #3 OR #4 MAY BE SUBSTITUTED. FIELD BENDING IS OPTIONAL.
β - PAIRS OF G7 BARS, OR G9 AND G10 BARS, MAY BE USED INTERCHANGEABLY AS BOTTOM FLANGE TIES.

Bridge Design Engr:	M:\STANDARDS\Girders\WF 1-Girders\WF42G\WF42G1.man							
Supervisor				REGION NO.	STATE	FED. AID PROJ. NO.	SHEET NO.	TOTAL SHEETS
Designed By				10	WASH			
Checked By				JOB NUMBER				
Detailed By								
Bridge Projects Engr.								
Prelim. Plan By								
Architect/Specialist	DATE	REVISION	BY	APP'D				

BRIDGE AND STRUCTURES OFFICE

Washington State Department of Transportation

STANDARD PRESTRESSED CONCRETE GIRDERS

WF42G GIRDER DETAILS 1 OF 3

BRIDGE SHEET NO. / SHEET / OF / SHEETS

SR ____ JOB NO. ____ SHEET ____

5.6-A7-4

Wed Oct 31 08:29:54 2007

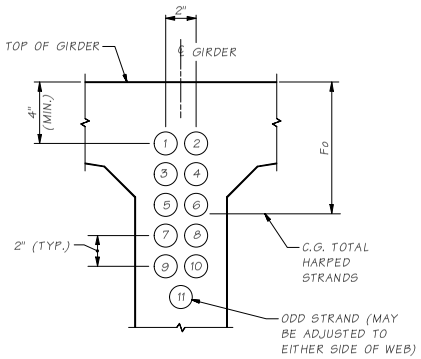

STRAND PATTERN AT GIRDER END

HARPED STRAND LOCATION SEQUENCE SHALL BE AS SHOWN (1), (2) ETC.

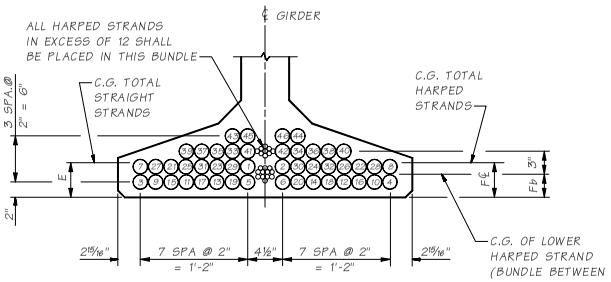

STRAND PATTERN AT ℄ SPAN

STRAIGHT STRAND LOCATION SEQUENCE SHALL BE AS SHOWN (1), (2) ETC.

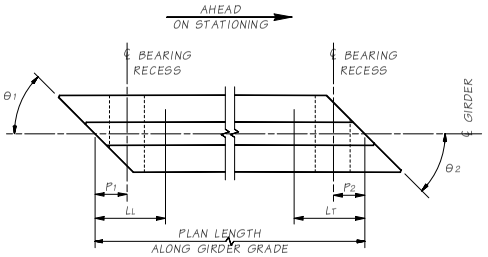

NOTE:
LL AND LT ARE SHIPPING SUPPORT LOCATIONS AT LEADING AND TRAILING ENDS, RESPECTIVELY.

GIRDER SCHEDULE

DIMENSION "A" AT ℄ BEARINGS = BASED ON GIRDER DEFLECTION = "D" AT TIME OF SLAB PLACEMENT (120 DAYS)

SPAN	GIRDER	END 1 TYPE	END 2 TYPE	L	LL	LT	θ1 (DEG.)	θ2 (DEG.)	P1	P2	PLAN LENGTH (ALONG GIRDER GRADE)	MIN. CONC. COMP. STRENGTH @ FINAL F'C (KSI)	MIN. CONC. COMP. STRENGTH @ RELEASE F'CI (KSI)	HARPED NO. OF STRANDS	HARPED JACKING FORCE (KIPS)	STRAIGHT NO. OF STRANDS	STRAIGHT JACKING FORCE (KIPS)	TEMPORARY NO. OF STRANDS	TEMPORARY JACKING FORCE (KIPS)	LOCATION OF C.G. STRANDS E	LOCATION OF C.G. STRANDS F℄	LOCATION OF C.G. STRANDS Fb	LOCATION OF C.G. STRANDS Fo	C	D @ 40 DAYS	D @ 120 DAYS	Ld
-	-	-	-	-	-	-	-	-	-	-	-	-	-	-	-	-	-	-	-	-	-	-	-	-	-	-	-	-
-	-	-	-	-	-	-	-	-	-	-	-	-	-	-	-	-	-	-	-	-	-	-	-	-	-	-	-	-

NOTE:
Dimensions shall be shown in Imperial units to the nearest ⅛th inch.

The number of harped strands should not exceed ½ of the number of straight strands.

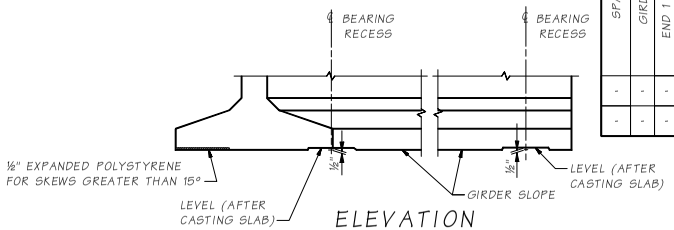

ELEVATION

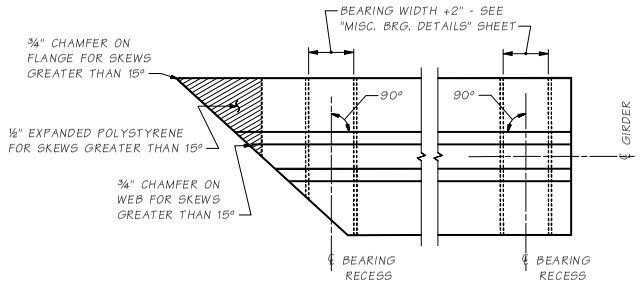

PLAN

BEARING RECESS AND BOTTOM FLANGE SPALL PROTECTION DETAIL

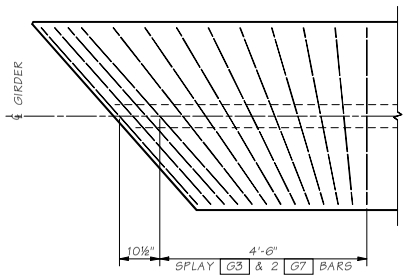

TRANSVERSE REINFORCING SKEWED ENDS

ONLY TRANSVERSE REINF. SHOWN

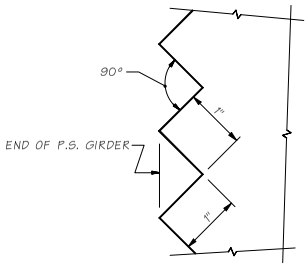

SAWTOOTH DETAILS

SAWTEETH ARE FULL WIDTH - USE SAWTOOTH KEYS FROM BOTTOM OF BOTTOM FLANGE TO BOTTOM OF LOWEST HARPED STRAND AS WELL AS TOP FLANGE ADJACENT TO HARPED STRANDS AS SHOWN IN VIEW B - GIRDER DETAILS 1 OF 3

| | | |

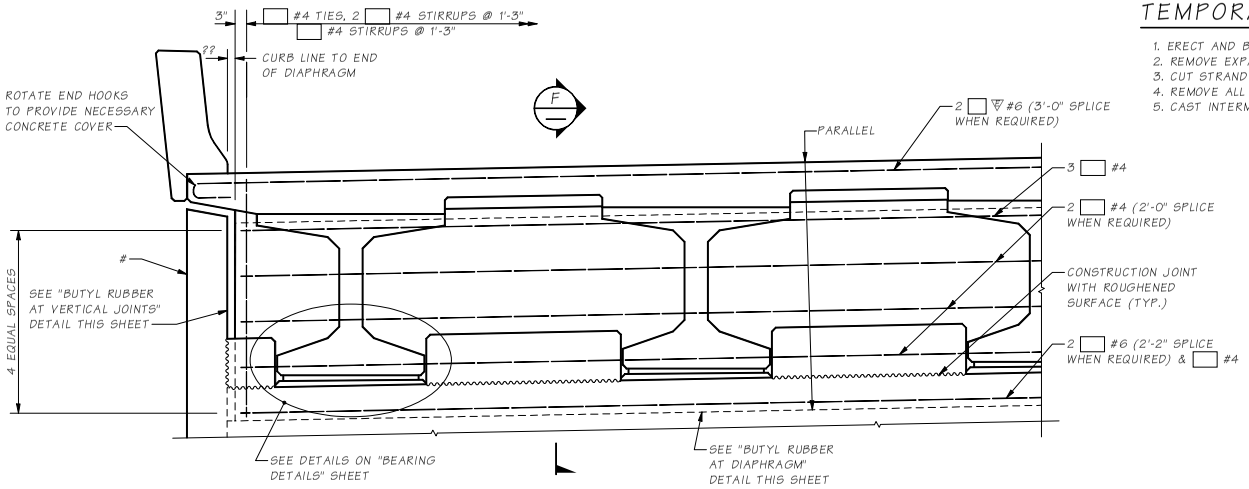

TEMPORARY STRAND CUTTING SEQUENCE

1. ERECT AND BRACE GIRDERS.
2. REMOVE EXPANDED POLYSTYRENE IN 2" x 2" RECESSES IN TOP FLANGE OF GIRDERS.
3. CUT STRAND AND PLASTIC SLEEVE IN 2" x 2" RECESS.
4. REMOVE ALL MOISTURE IN RECESS PRIOR TO FILLING RECESS WITH GROUT.
5. CAST INTERMEDIATE & END DIAPHRAGMS.

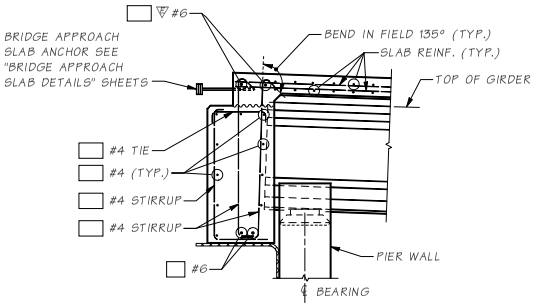

SECTION F

ELEVATION END DIAPHRAGM

DIMENSIONS ARE ALONG DIAPHRAGM

If ground line is less than 2'-0" minimum below the bottom of girder at front face of abutment a curtain wall shall be provided.

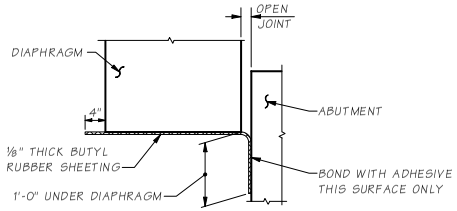

ELEVATION BUTYL RUBBER AT DIAPHRAGM

NOTE:
GIRDERS SHALL BE HELD RIGIDLY IN PLACE WHEN DIAPHRAGMS ARE PLACED.

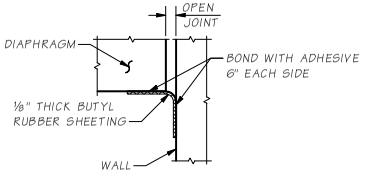

PLAN BUTYL RUBBER AT VERTICAL JOINTS

Bridge length	Open Joint
L ≤ 200'	** = 1.5"
200' < L ≤ 300'	** = 2.0"
300' < L ≤ 400'	** = 2.5"
L > 400'	Special design

* Revise based on size of Open Joint

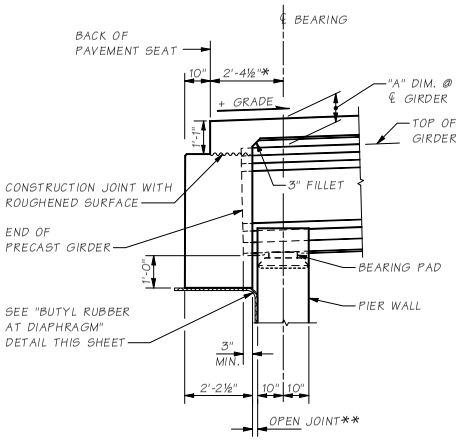

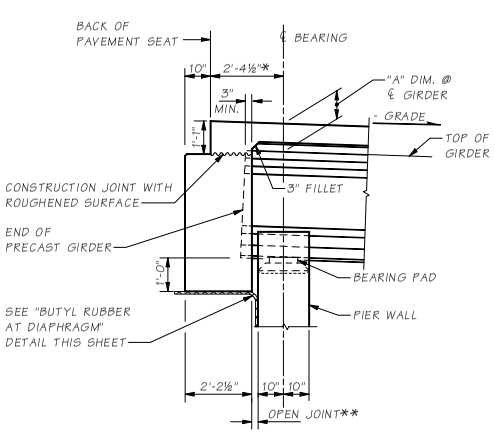

END DIAPHRAGM GEOMETRY

SEE "GIRDER DETAILS" SHEET FOR DIMENSION "A".
ALL LONGITUDINAL DIMENSIONS ARE NORMAL TO SKEW.

Bridge Design Engr.	M:\STANDARDS\Girders\WF I-Girders\WF42G\WF42G_END_DIA_ON_GIR.MAN				REGION NO.	STATE	FED. AID PROJ. NO.	SHEET NO.	TOTAL SHEETS
Supervisor					10	WASH			
Designed By					JOB NUMBER				
Checked By									
Detailed By									
Bridge Projects Engr.									
Prelim Plan By									
Architect/Specialist	DATE	REVISION	BY	APP'D					

BRIDGE AND STRUCTURES OFFICE

Washington State Department of Transportation

STANDARD PRESTRESSED CONCRETE GIRDERS

WF42G END DIAPHRAGM ON GIRDER DETAILS

BRIDGE SHEET NO.
SHEET
OF
SHEETS

SR JOB NO. SHEET
5-6-A7-6

Wed Oct 31 09:30:21 2007

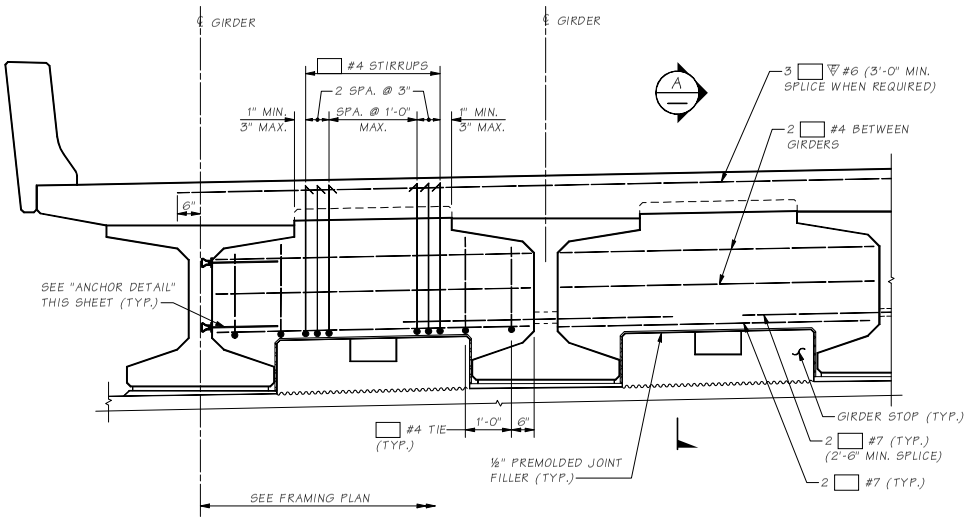

ELEVATION END DIAPHRAGM

DIMENSIONS ARE ALONG DIAPHRAGM

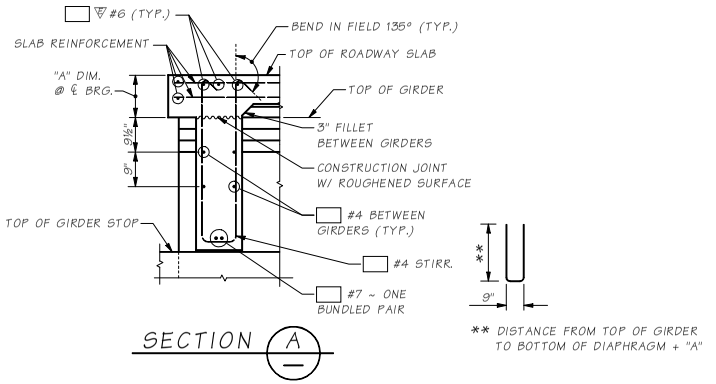

SECTION A

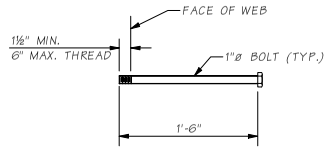

ANCHOR DETAIL

ASTM A-307

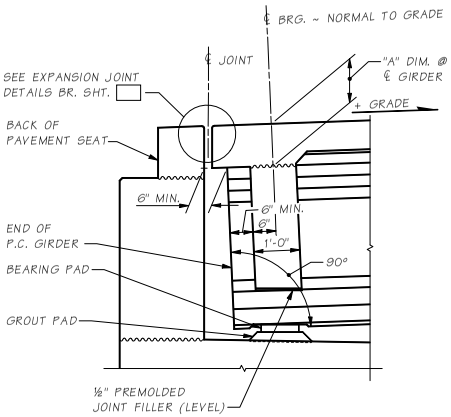

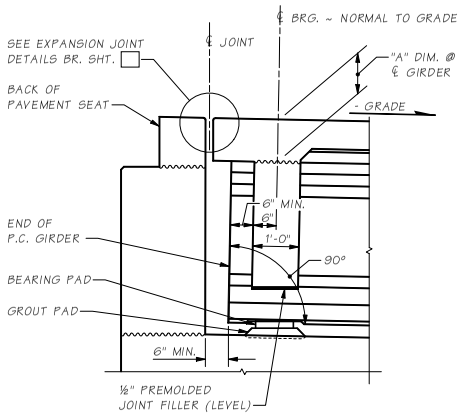

ROADWAY EXPANSION JOINT AT END PIERS

LONGITUDINAL DIMENSIONS ARE NORMAL TO SKEW.
GIRDER STOP NOT SHOWN FOR CLARITY.

TEMPORARY STRAND CUTTING SEQUENCE

1. ERECT AND BRACE GIRDERS.
2. REMOVE EXPANDED POLYSTYRENE IN 2" x 2" RECESSES IN TOP FLANGE OF GIRDERS.
3. CUT STRAND AND PLASTIC SLEEVE IN 2" x 2" RECESS.
4. REMOVE ALL MOISTURE IN RECESS PRIOR TO FILLING RECESS WITH GROUT.
5. CAST INTERMEDIATE & END DIAPHRAGMS.

NOTE:

GIRDERS SHALL BE HELD RIGIDLY IN PLACE WHEN DIAPHRAGMS ARE PLACED. REINFORCING BAR SHALL BE THREADED THROUGH HOLES IN GIRDERS PRIOR TO PLACING OF EXTERIOR GIRDERS. SEE "GIRDER DETAILS" SHEET FOR DIMENSION "A".

Bridge Design Engr.	M:\STANDARDS\Girders\WF I-Girders\WF42G\WF42G_ABUT_PIER_DIAPH_DET.MAN				REGION NO.	STATE	FED. AID PROJ. NO.		SHEET NO.	TOTAL SHEETS
Supervisor					10	WASH.				
Designed By					JOB NUMBER					
Checked By										
Detailed By										
Bridge Projects Engr.										
Prelim. Plan By										
Architect/Specialist	DATE	REVISION	BY	APP'D						

BRIDGE AND STRUCTURES OFFICE

Washington State Department of Transportation

STANDARD PRESTRESSED CONCRETE GIRDERS

WF42G ABUTMENT TYPE PIER DIAPHRAGM DETAILS

BRIDGE SHEET NO.

SHEET OF SHEETS

SR JOB NO. SHEET 5-6-A7-7

Wed Oct 31 09:30:26 2007

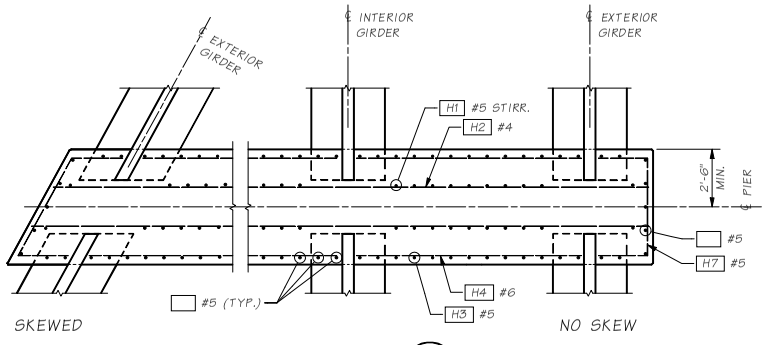

SECTION B

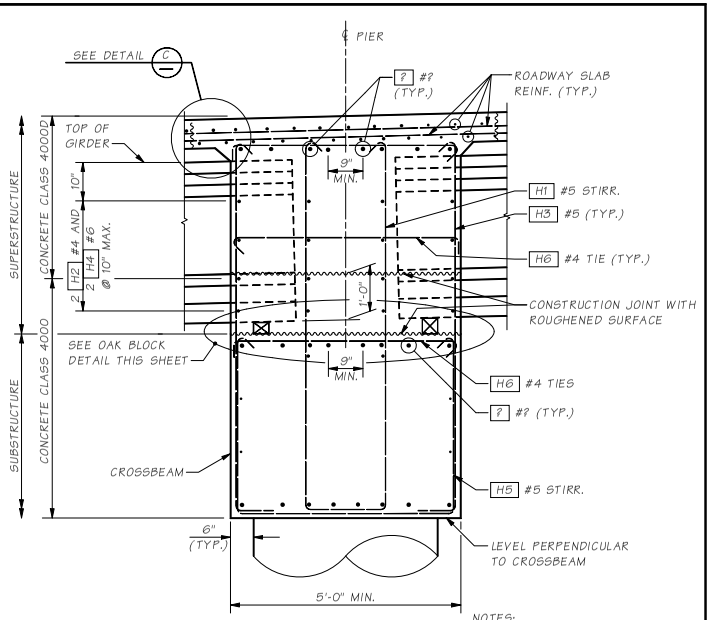

SECTION A

NOTES:
1. LONGITUDINAL DIMENSIONS ARE NORMAL TO SKEW.
2. FOR CONCRETE PLACEMENT PROCEDURE SEE "SUPERSTRUCTURE CONSTRUCTION SEQEUNCE" SHEET.

ELEVATION AT TOP OF OAK BLOCK

GIRDER	PIER ?	
	BACK STATION	AHEAD STATION

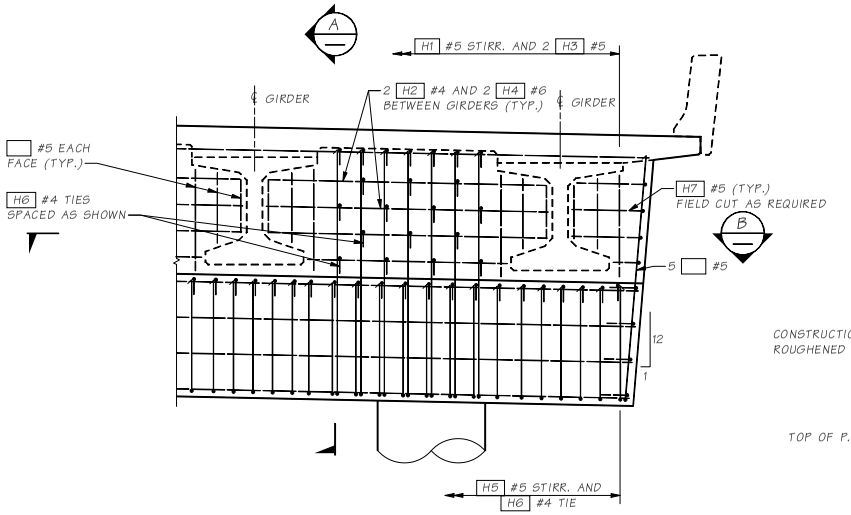

ELEVATION

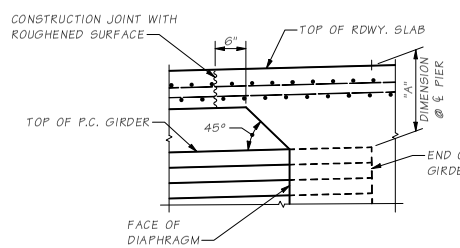

DETAIL C

DIAPHRAGM REINFORCING NOT SHOWN FOR CLARITY

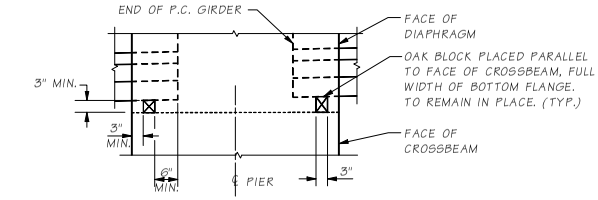

OAK BLOCK DETAIL

LONGITUDINAL DIMENSIONS ARE NORMAL TO SKEW

NOTE TO DESIGNER

The actual bar size and spacing shall be determined by the designer.

Bridge Design Engr.	M:\STANDARDS\Girders\WF I-Girders\WF42G\WF42G_FIX_FLUSH_FACE_INTER_PIER_DIAPH_DET.MAN				REGION NO.	STATE	FED. AID PROJ. NO.	SHEET NO.	TOTAL SHEETS
Supervisor					10	WASH.			
Designed By					JOB NUMBER				
Checked By									
Detailed By									
Bridge Projects Engr.									
Prelim Plan By									
Architect/Specialist	DATE	REVISION	BY	APP'D					

Fri Feb 01 13:19:34 2008

BRIDGE AND STRUCTURES OFFICE

Washington State Department of Transportation

STANDARD PRESTRESSED CONCRETE GIRDERS

WF42G FIXED FLUSH-FACE DIAPHRAGM AT INTERMEDIATE PIER DETAILS

BRIDGE SHEET NO.

SHEET OF SHEETS

SR JOB NO. SHEET

5.6-A7-8

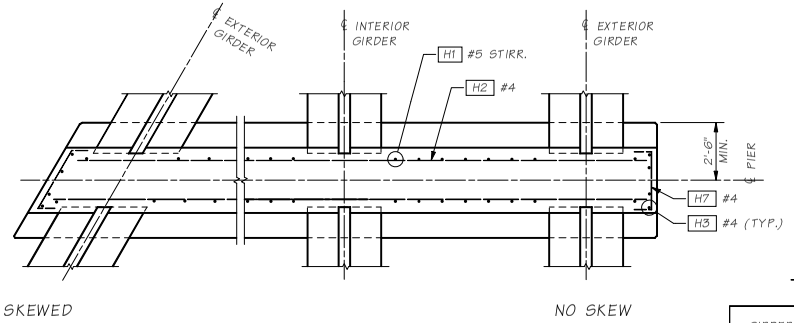

SECTION B

ELEVATION AT TOP OF OAK BLOCK

GIRDER	PIER ?	
	BACK STATION	AHEAD STATION

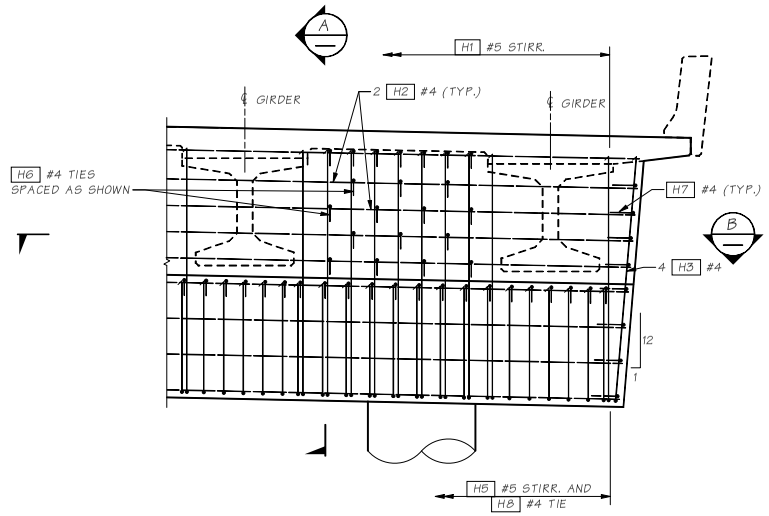

ELEVATION

NOTE TO DESIGNER

The actual bar size and spacing shall be determined by the designer.

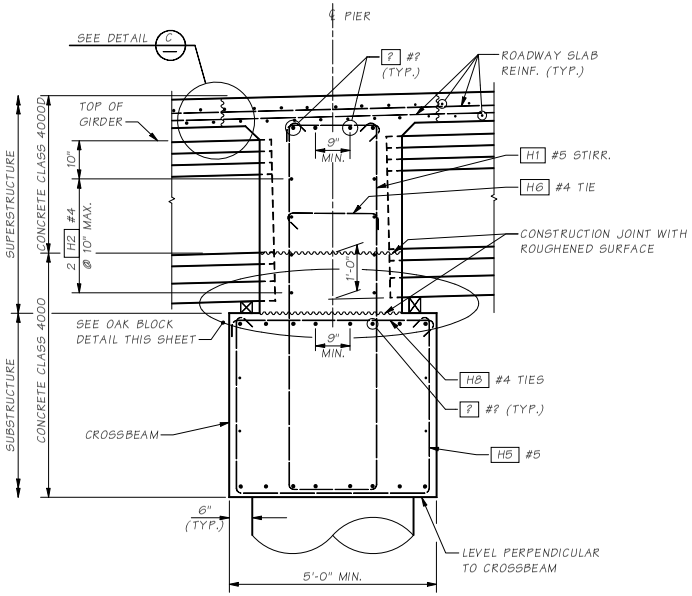

SECTION A

NOTES:
1. LONGITUDINAL DIMENSIONS ARE NORMAL TO SKEW.
2. FOR CONCRETE PLACEMENT PROCEDURE SEE "SUPERSTRUCTURE CONSTRUCTION SEQEUNCE" SHEET.

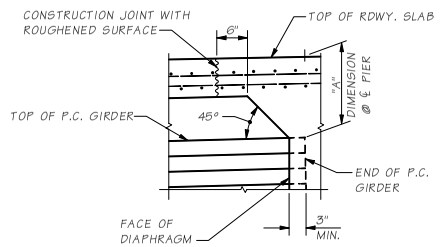

DETAIL C

DIAPHRAGM REINFORCING NOT SHOWN FOR CLARITY

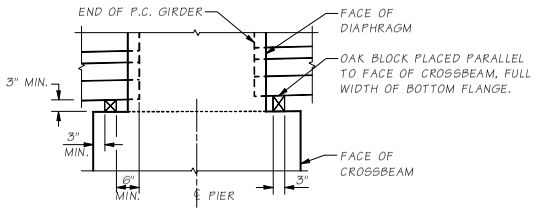

OAK BLOCK DETAIL

LONGITUDINAL DIMENSIONS ARE NORMAL TO SKEW

Bridge Design Engr.	M:\STANDARDS\Girders\WF I-Girders\WF42G\WF42G_FIX_RECESSED_FACE_INTER_PIER_DIAPH_DET.MAN				REGION NO.	STATE	FED. AID PROJ. NO.	SHEET NO.	TOTAL SHEETS
Supervisor					10	WASH			
Designed By					JOB NUMBER				
Checked By									
Detailed By									
Bridge Projects Engr.									
Prelim. Plan By									
Architect/Specialist	DATE	REVISION	BY	APP'D					

BRIDGE AND STRUCTURES OFFICE

Washington State Department of Transportation

STANDARD PRESTRESSED CONCRETE GIRDERS

WF42G FIXED RECESSED-FACE DIAPHRAGM AT INTERMEDIATE PIER DETAILS

BRIDGE SHEET NO. / SHEET / OF / SHEETS

SR / JOB NO. / SHEET

Fri Feb 01 13:19:42 2008

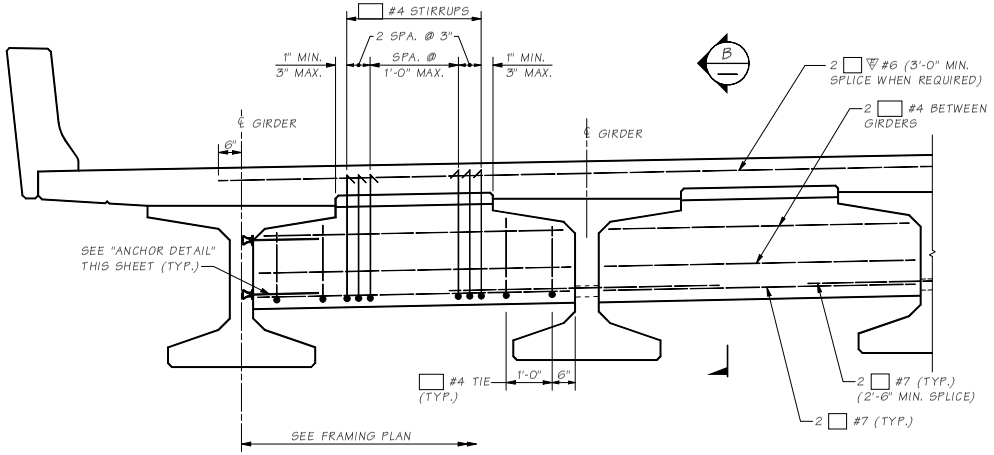

ELEVATION
INTERMEDIATE DIAPHRAGM

DIMENSIONS ARE ALONG DIAPHRAGM

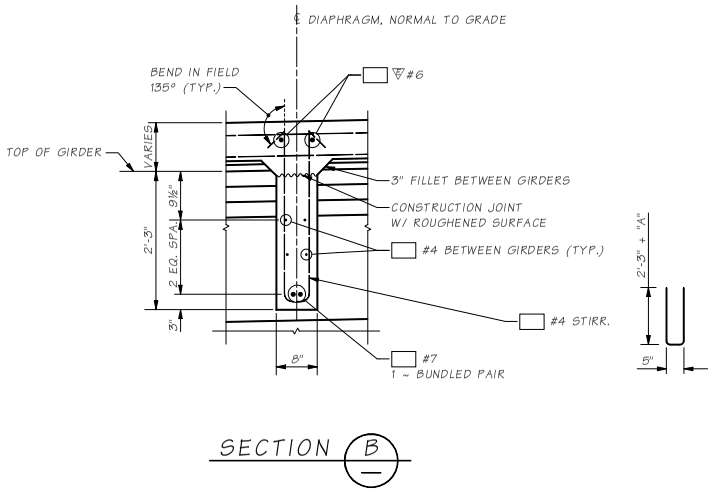

SECTION B

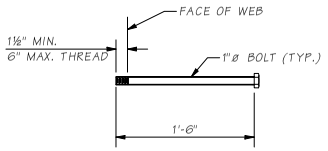

ANCHOR DETAIL
ASTM A-307

NOTE:

GIRDERS SHALL BE HELD RIGIDLY IN PLACE WHEN DIAPHRAGMS ARE PLACED. REINFORCING BAR SHALL BE THREADED THROUGH HOLES IN GIRDERS PRIOR TO PLACING OF EXTERIOR GIRDERS. SEE "GIRDER DETAILS" SHEET FOR DIMENSION "A".

Bridge Design Engr.	M:\STANDARDS\Girders\WF I-Girders\WF42G\WF42G_INTER_DIAPHRAGM_DET.MAN				REGION NO.	STATE	FED. AID PROJ. NO.	SHEET NO.	TOTAL SHEETS
Supervisor					10	WASH.			
Designed By									
Checked By					JOB NUMBER				
Detailed By									
Bridge Projects Engr.									
Prelim Plan By									
Architect/Specialist	DATE	REVISION	BY	APP'D					

BRIDGE AND STRUCTURES OFFICE

Washington State Department of Transportation

STANDARD PRESTRESSED CONCRETE GIRDERS

WF42G INTERMEDIATE DIAPHRAGM DETAILS

BRIDGE SHEET NO.

SHEET OF SHEETS

SR JOB NO. SHEET

5.6-A7-10

Fri Feb 01 13:19:56 2008

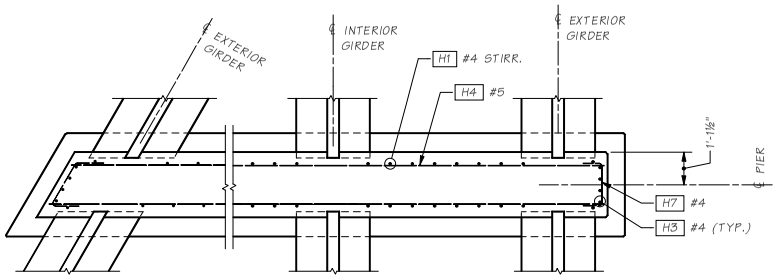

SECTION B

ELEVATION AT TOP OF OAK BLOCK

GIRDER	PIER ?	
	BACK STATION	AHEAD STATION

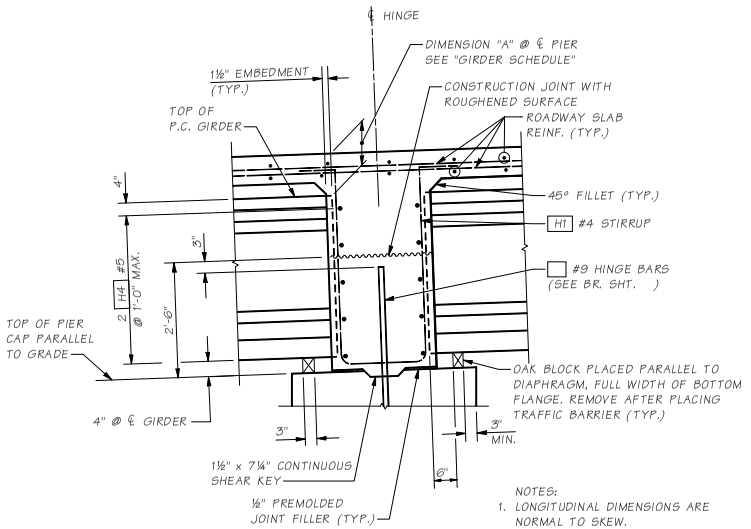

SECTION A

NOTES:
1. LONGITUDINAL DIMENSIONS ARE NORMAL TO SKEW.
2. FOR CONCRETE PLACEMENT PROCEDURE SEE "SUPERSTRUCTURE CONSTRUCTION SEQUENCE" SHEET.
3. EXTENDED STRANDS AND GIRDER REINFORCING NOT SHOWN FOR CLARITY.

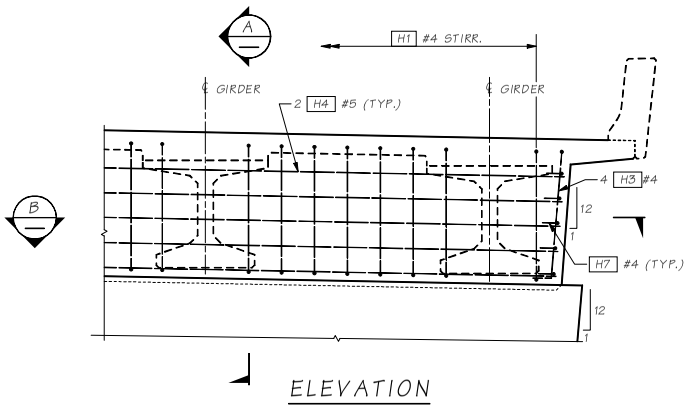

ELEVATION

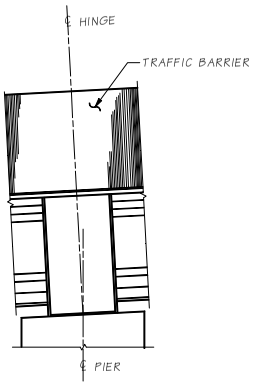

END VIEW
HINGE DIAPHRAGM

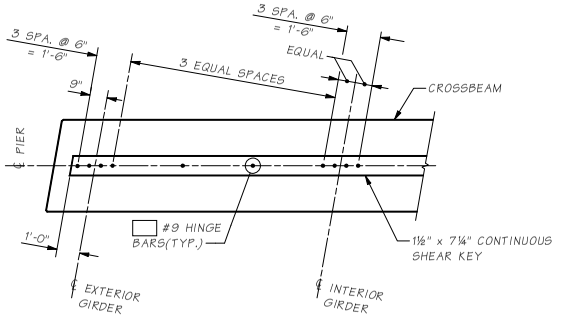

HINGE BAR PLAN

Hinge bar plan is shown for designer. The actual hinge bars detail shall be shown on the crossbeam details sheet.

Bridge Design Engr.	M:\STANDARDS\Girders\WF I-Girders\WF42G\WF42G_HINGE_DIAPHRAGM_INTER_PIER_DIAPH_DET.MAN								
Supervisor					REGION NO.	STATE	FED. AID PROJ. NO.	SHEET NO.	TOTAL SHEETS
Designed By					10	WASH.			
Checked By					JOB NUMBER				
Detailed By									
Bridge Projects Engr.									
Prelim. Plan By									
Architect/Specialist	DATE	REVISION	BY	APP'D					

BRIDGE AND STRUCTURES OFFICE

Washington State Department of Transportation

STANDARD PRESTRESSED CONCRETE GIRDERS

WF42G HINGE DIAPHRAGM AT INTERMEDIATE PIER DETAILS

BRIDGE SHEET NO.

SHEET OF SHEETS

SR ____ JOB NO. ____ SHEET ____

5.6-A7-11

Fri Feb 01 13:19:49 2008

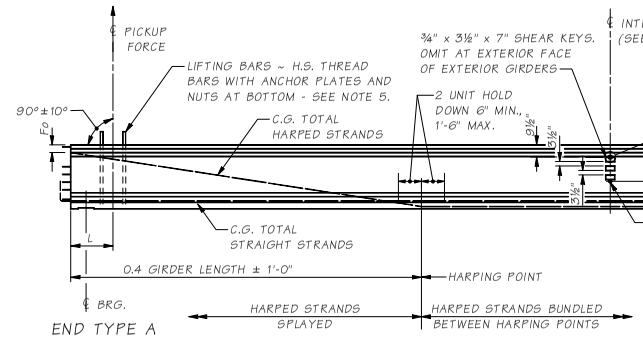

END TYPE A

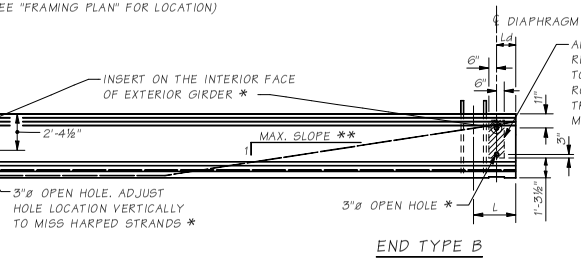

END TYPE B

GIRDER ELEVATION

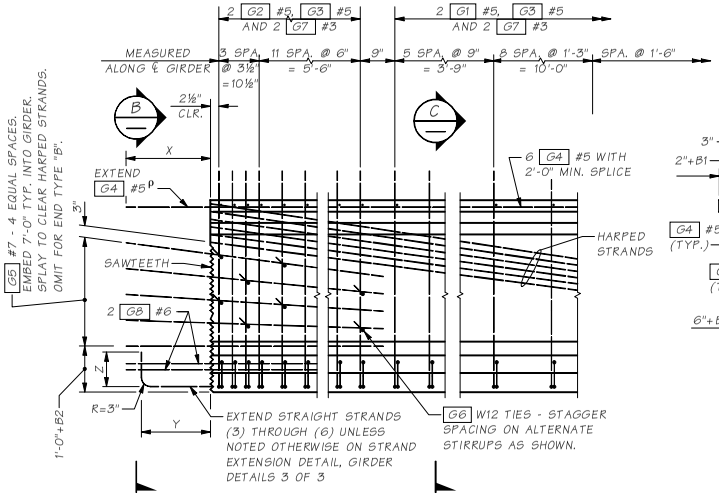

* OMIT HOLES AND PLACE INSERTS ON THE INTERIOR FACE OF EXTERIOR GIRDERS. PLACE HOLES AND INSERTS PARALLEL TO SKEW. INSERTS SHALL BE 1"ø BURKE HI-TENSILE, LANCASTER MALLEABLE, DAYTON-SUPERIOR F-62 FLARED THIN SLAB (1" x 4⅝") FERRULE OR APPROVED EQUAL. (TYP.)

** MAXIMUM SLOPE FOR STRANDS 6 : 1 FOR EACH ½"ø STRAND OR 8 : 1 FOR EACH 0.6"ø STRAND

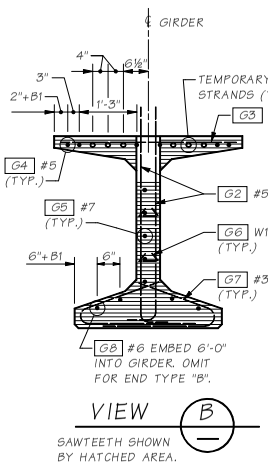

VIEW B

SAWTEETH SHOWN BY HATCHED AREA.

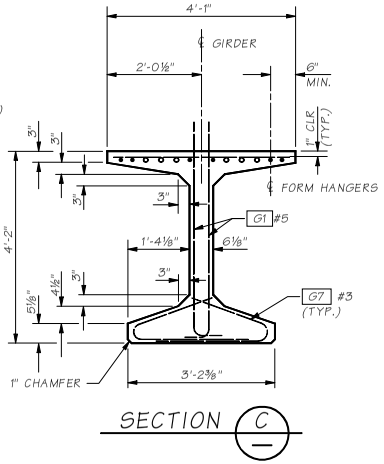

SECTION C

NOTES

1. PLAN LENGTH SHALL BE INCREASED AS NECESSARY TO COMPENSATE FOR SHORTENING DUE TO PRESTRESS AND SHRINKAGE.
2. ALL PRETENSIONED AND TEMPORARY STRANDS SHALL BE [½"ø OR 0.6"ø] LOW RELAXATION STRANDS (AASHTO M203 GRADE 270.)
3. FOR END TYPES A, C AND D CUT ALL STRANDS FLUSH WITH THE GIRDER ENDS AND PAINT WITH AN APPROVED EPOXY RESIN, EXCEPT FOR EXTENDED STRANDS AS SHOWN. FOR END TYPE B CUT ALL STRANDS 1" BELOW CONCRETE SURFACE AND GROUT WITH AN APPROVED EPOXY GROUT.
4. THE TOP SURFACE OF THE GIRDER FLANGE SHALL BE ROUGHENED IN ACCORDANCE WITH SECTION 6-02.3(25)H OF THE STANDARD SPECIFICATIONS.
5. LIFTING EMBEDMENTS SHALL BE INSTALLED IN ACCORDANCE WITH SECTION 6-02.3(25)L OF THE STANDARD SPECIFICATIONS.
6. CAUTION SHALL BE EXERCISED IN HANDLING AND PLACING GIRDERS. ALL GIRDERS SHALL BE CHECKED BY THE CONTRACTOR TO ENSURE THAT THEY ARE BRACED ADEQUATELY TO PREVENT TIPPING AND TO CONTROL LATERAL BENDING DURING SHIPPING. ONCE ERECTED, ALL GIRDERS SHALL BE BRACED LATERALLY TO PREVENT TIPPING UNTIL THE DIAPHRAGMS ARE CAST AND CURED.
7. FORMS FOR BEARING PAD RECESSES SHALL BE CONSTRUCTED AND FASTENED IN SUCH A MANNER AS TO NOT CAUSE DAMAGE TO THE GIRDER DURING THE STRAND RELEASE OPERATION.
8. TEMPORARY STRANDS SHALL BE EITHER PRETENSIONED OR POST-TENSIONED IN ACCORDANCE WITH SECTION 6-02.3(25)L OF THE STANDARD SPECIFICATIONS. IF PRETENSIONED, THESE TEMPORARY STRANDS SHALL BE UNBONDED OVER ALL BUT THE END 10'-0" OF THE GIRDER LENGTH. AS AN ALTERNATE, TEMPORARY STRANDS MAY BE POST-TENSIONED ON THE SAME DAY THE PRETENSIONING IS RELEASED INTO THE GIRDER.

INTERMEDIATE DIAPHRAGM:
1/4 points of span for span lengths over 120'-0"
1/3 points of span for span lengths 80'-0" to 120'-0"
1/2 points of span for span lengths less than 40'-0" to 80'-0"
No intermediate diaphragm for span lengths 40'-0" or less.

Diaphragm Type	END TYPE	BEARING RECESS	X	Y	Z	SAWTEETH
End Diaph. on Girder	A	YES	1'-10"	1'-6"	9"	YES
"L" Abutment	B	YES	0"	0"	0"	NO
Hinge Diaph. on Interm. Pier	C	NO	1'-10"	1'-6"	9"	YES
Fixed Diaph. @ Interm. Pier	D	NO	1'-10"	ALT. 1 OR ALT. 2 STRAND EXTENSION		YES

TYPICAL END ELEVATION

END TYPE C SHOWN, OTHER END TYPES SIMILAR.

ρ FIELD BENDING REQUIRED TO OBTAIN 1½" CONCRETE COVER AT PAVEMENT SEAT.

(stirrup spacing shall be determined by the designer)

FOR END TYPE "C"

ENDS AHEAD ON STATION
G5 BARS LEFT OF ℄
B1 = 0" (G4 , G8)
B2 = 0" (G5)
ENDS BACK ON STATION
G5 BARS RIGHT OF ℄
B1 = 1½" (G4 , G8)
B2 = 3" (G5)

MARK	LOCATION	SIZE	
G1	GIRDER STIRRUPS	5	
G2	GIRDER END STIRRUPS	5	
G3	GIRDER TOP FLANGE	5	STR.
G4	GIRDER LONGIT. FULL LENGTH	5	STR.
G5	GIRDER END LONGIT.	7	STR.
G6	GIRDER END TIES	W12 δ	
G7β	GIRDER BOT. FLANGE TIES	3	
G8	GIRDER END LONGIT.	6	STR.
G9β	GIRDER BOT. FLANGE TIES	3	
G10β	GIRDER BOT. FLANGE TIES	3	

BENDING DIAGRAM (ALL DIMENSIONS ARE OUT TO OUT)
NOTE: FOR DIMENSION "A", SEE "GIRDER SCHEDULE"

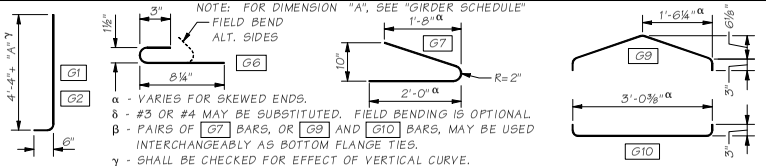

α - VARIES FOR SKEWED ENDS.
δ - #3 OR #4 MAY BE SUBSTITUTED. FIELD BENDING IS OPTIONAL.
β - PAIRS OF G7 BARS, OR G9 AND G10 BARS, MAY BE USED INTERCHANGEABLY AS BOTTOM FLANGE TIES.
γ - SHALL BE CHECKED FOR EFFECT OF VERTICAL CURVE.

Bridge Design Engr.	M:\STANDARDS\Girders\WF I-Girders\WF50G\WF50G1.man							
Supervisor				REGION NO.	STATE	FED. AID PROJ. NO.	SHEET NO.	TOTAL SHEETS
Designed By				10	WASH.			
Checked By				JOB NUMBER				
Detailed By								
Bridge Projects Engr.								
Prelim. Plan By								
Architect/Specialist	DATE	REVISION	BY	APP'D				

BRIDGE AND STRUCTURES OFFICE

Washington State Department of Transportation

STANDARD PRESTRESSED CONCRETE GIRDERS

WF50G GIRDER DETAILS 1 OF 3

BRIDGE SHEET NO. SHEET OF SHEETS

SR JOB NO. SHEET

5.6-AB-1

Fri Feb 01 13:26:54 2008

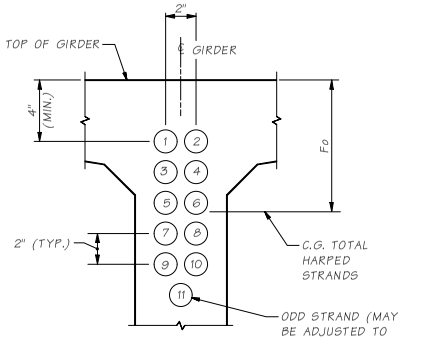

STRAND PATTERN AT GIRDER END

HARPED STRAND LOCATION SEQUENCE SHALL BE AS SHOWN (1), (2) ETC.

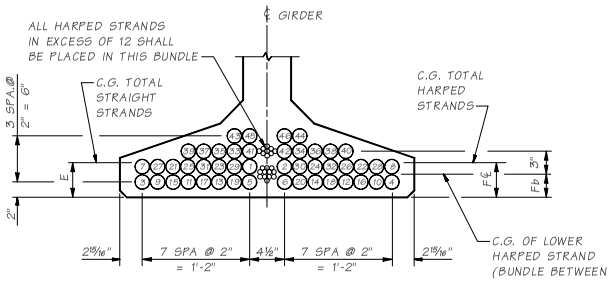

STRAND PATTERN AT ℄ SPAN

STRAIGHT STRAND LOCATION SEQUENCE SHALL BE AS SHOWN (1), (2) ETC.

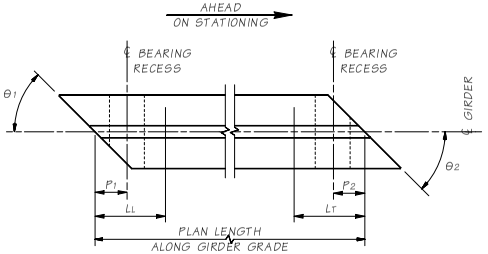

NOTE:
LL AND LT ARE SHIPPING SUPPORT LOCATIONS AT LEADING AND TRAILING ENDS, RESPECTIVELY.

GIRDER SCHEDULE

DIMENSION "A" AT ℄ BEARINGS = BASED ON GIRDER DEFLECTION = "D" AT TIME OF SLAB PLACEMENT (120 DAYS)

SPAN	GIRDER	END 1 TYPE	END 2 TYPE	L	LL	LT	θ1 (DEG.)	θ2 (DEG.)	P1	P2	PLAN LENGTH (ALONG GIRDER GRADE)	MIN. CONC. COMP. STRENGTH @ FINAL F'C (KSI)	MIN. CONC. COMP. STRENGTH @ RELEASE F'CI (KSI)	HARPED NO. OF STRANDS	HARPED JACKING FORCE (KIPS)	STRAIGHT NO. OF STRANDS	STRAIGHT JACKING FORCE (KIPS)	TEMPORARY NO. OF STRANDS	TEMPORARY JACKING FORCE (KIPS)	LOCATION OF C.G. STRANDS E	LOCATION OF C.G. STRANDS ℄F	LOCATION OF C.G. STRANDS Fb	LOCATION OF C.G. STRANDS Fo	C	D @ 40 DAYS	D @ 120 DAYS	Ld
"	"	"	"	"	"	"	"	"	"	"	"	"	"	"	"	"	"	"	"	"	"	"	"	"	"	"	"	"
"	"	"	"	"	"	"	"	"	"	"	"	"	"	"	"	"	"	"	"	"	"	"	"	"	"	"	"	"

NOTE:
Dimensions shall be shown in Imperial units to the nearest 1/8th inch.

The number of harped strands should not exceed ½ of the number of straight strands.

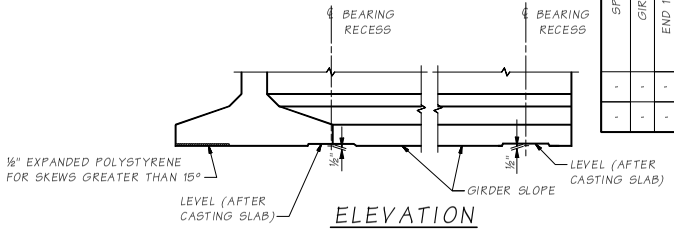

ELEVATION

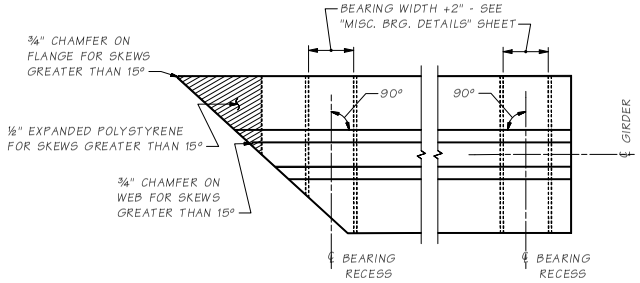

PLAN

BEARING RECESS AND BOTTOM FLANGE SPALL PROTECTION DETAIL

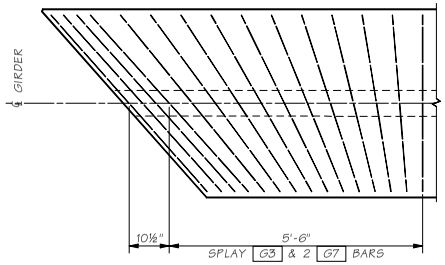

TRANSVERSE REINFORCING SKEWED ENDS

ONLY TRANSVERSE REINF. SHOWN

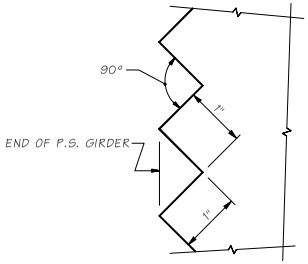

SAWTOOTH DETAILS

SAWTEETH ARE FULL WIDTH - USE SAWTOOTH KEYS FROM BOTTOM OF BOTTOM FLANGE TO BOTTOM OF LOWEST HARPED STRAND AS WELL AS TOP FLANGE ADJACENT TO HARPED STRANDS AS SHOWN IN VIEW B - GIRDER DETAILS 1 OF 3

| | | |

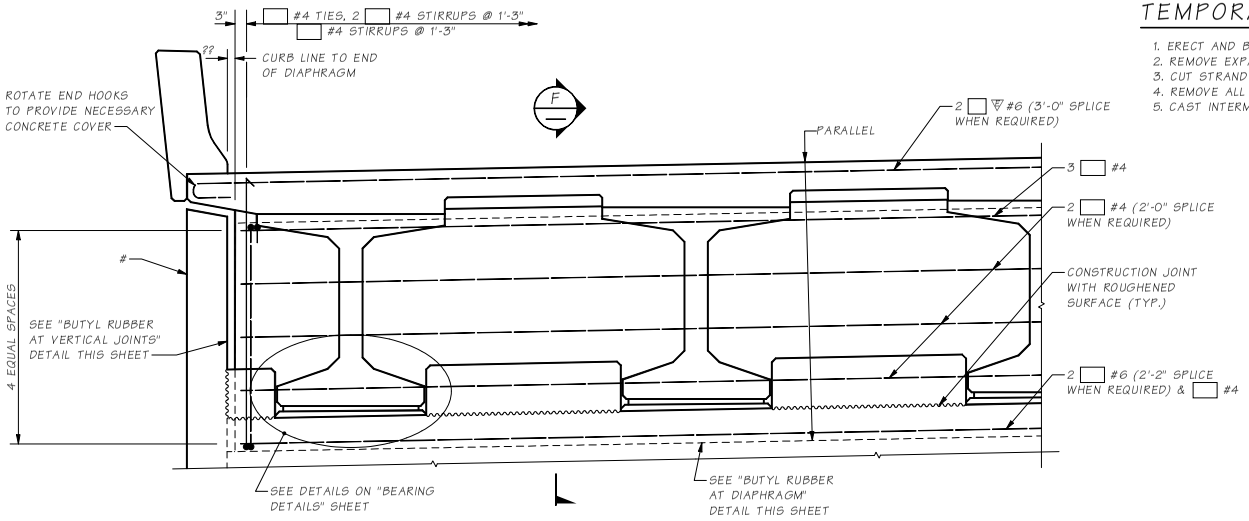

ELEVATION END DIAPHRAGM

DIMENSIONS ARE ALONG DIAPHRAGM

If ground line is less than 2'-0" minimum below the bottom of girder at front face of abutment a curtain wall shall be provided.

TEMPORARY STRAND CUTTING SEQUENCE

1. ERECT AND BRACE GIRDERS.
2. REMOVE EXPANDED POLYSTYRENE IN 2" x 2" RECESSES IN TOP FLANGE OF GIRDERS.
3. CUT STRAND AND PLASTIC SLEEVE IN 2" x 2" RECESS.
4. REMOVE ALL MOISTURE IN RECESS PRIOR TO FILLING RECESS WITH GROUT.
5. CAST INTERMEDIATE & END DIAPHRAGMS.

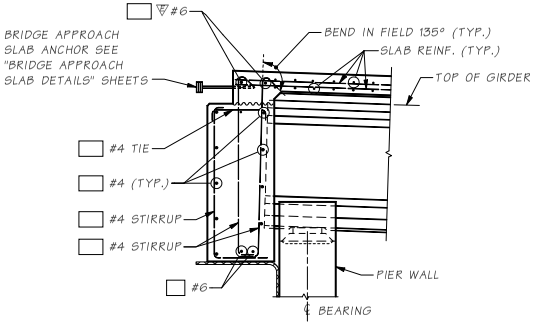

SECTION F

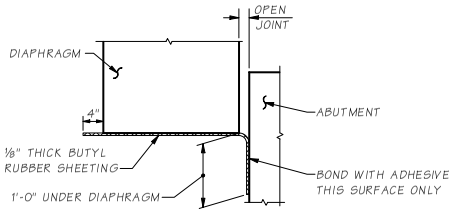

ELEVATION BUTYL RUBBER AT DIAPHRAGM

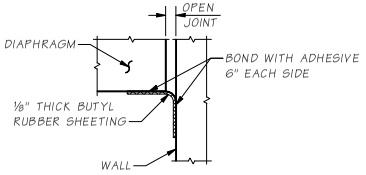

PLAN BUTYL RUBBER AT VERTICAL JOINTS

Bridge length	Open Joint
L ≤ 200'	** = 1.5"
200' < L ≤ 300'	** = 2.0"
300' < L ≤ 400'	** = 2.5"
L > 400'	Special design

* Revise based on size of Open Joint

NOTE:
GIRDERS SHALL BE HELD RIGIDLY IN PLACE WHEN DIAPHRAGMS ARE PLACED.

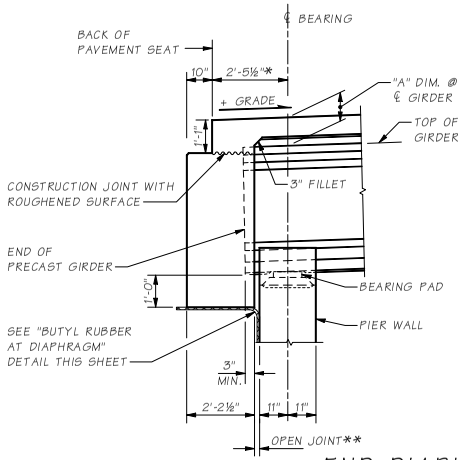

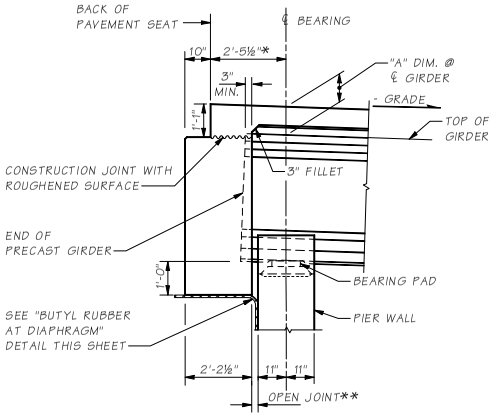

END DIAPHRAGM GEOMETRY

SEE "GIRDER DETAILS" SHEET FOR DIMENSION "A".
ALL LONGITUDINAL DIMENSIONS ARE NORMAL TO SKEW.

Bridge Design Engr.	M:\STANDARDS\Girders\WF I-Girders\WF50G\WF50G_END_DIA_ON_GIR.MAN								
Supervisor					REGION NO.	STATE	FED. AID PROJ. NO.	SHEET NO.	TOTAL SHEETS
Designed By					10	WASH.			
Checked By					JOB NUMBER				
Detailed By									
Bridge Projects Engr.									
Prelim Plan By									
Architect/Specialist	DATE	REVISION	BY	APP'D					

BRIDGE AND STRUCTURES OFFICE

Washington State Department of Transportation

STANDARD PRESTRESSED CONCRETE GIRDERS

WF50G END DIAPHRAGM ON GIRDER DETAILS

BRIDGE SHEET NO.

SHEET OF SHEETS

SR ____ JOB NO. ____ SHEET

5.6-A8-3

Fri Feb 01 13:27:05 2008

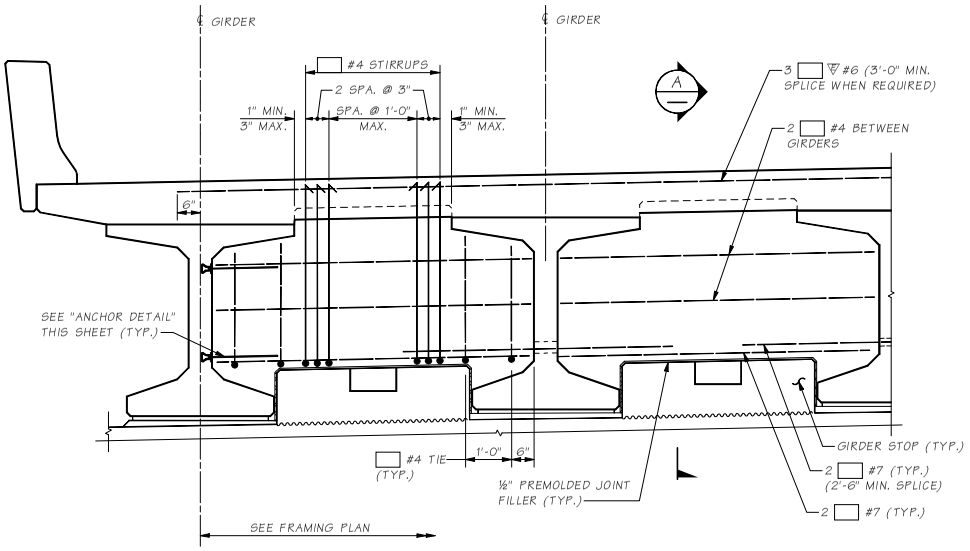

ELEVATION END DIAPHRAGM

DIMENSIONS ARE ALONG DIAPHRAGM

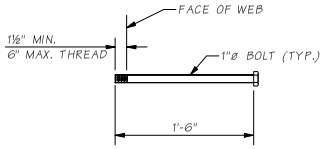

ANCHOR DETAIL

ASTM A-307

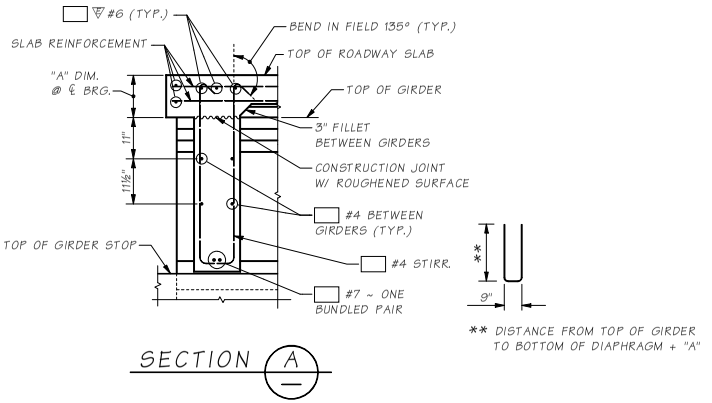

SECTION A

TEMPORARY STRAND CUTTING SEQUENCE

1. ERECT AND BRACE GIRDERS.
2. REMOVE EXPANDED POLYSTYRENE IN 2" x 2" RECESSES IN TOP FLANGE OF GIRDERS.
3. CUT STRAND AND PLASTIC SLEEVE IN 2" x 2" RECESS.
4. REMOVE ALL MOISTURE IN RECESS PRIOR TO FILLING RECESS WITH GROUT.
5. CAST INTERMEDIATE & END DIAPHRAGMS.

NOTE:

GIRDERS SHALL BE HELD RIGIDLY IN PLACE WHEN DIAPHRAGMS ARE PLACED. REINFORCING BAR SHALL BE THREADED THROUGH HOLES IN GIRDERS PRIOR TO PLACING OF EXTERIOR GIRDERS. SEE "GIRDER DETAILS" SHEET FOR DIMENSION "A".

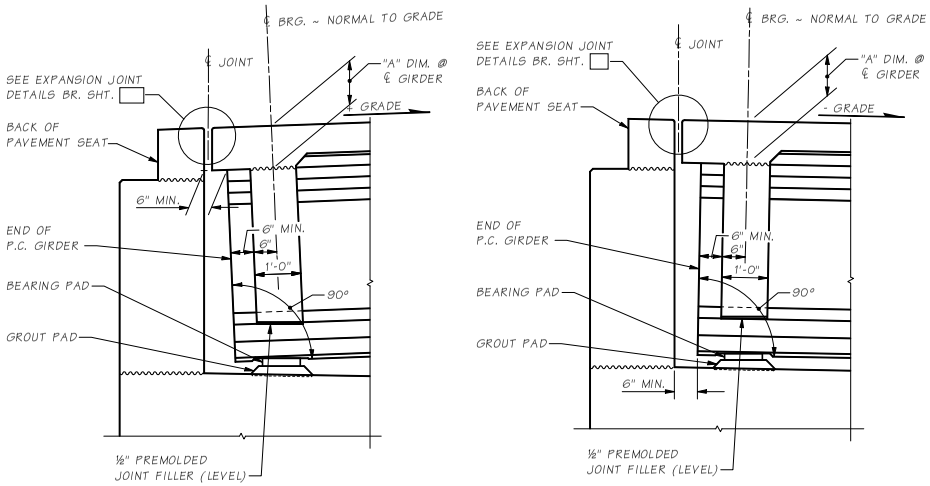

ROADWAY EXPANSION JOINT AT END PIERS

LONGITUDINAL DIMENSIONS ARE NORMAL TO SKEW.
GIRDER STOP NOT SHOWN FOR CLARITY.

Bridge Design Engr.	M:\STANDARDS\Girders\WF I-Girders\WF50G\WF50G_ABUT_PIER_DIAPH_DET.MAN				REGION NO.	STATE	FED. AID PROJ. NO.	SHEET NO.	TOTAL SHEETS
Supervisor					10	WASH			
Designed By					JOB NUMBER				
Checked By									
Detailed By									
Bridge Projects Engr.									
Prelim Plan By									
Architect/Specialist	DATE	REVISION	BY	APP'D					

BRIDGE AND STRUCTURES OFFICE

Washington State Department of Transportation

STANDARD PRESTRESSED CONCRETE GIRDERS

WF50G ABUTMENT TYPE PIER DIAPHRAGM DETAILS

BRIDGE SHEET NO. SHEET OF SHEETS

SR JOB NO. SHEET 5.6-A8-4

Fri Feb 01 13:27:13 2008

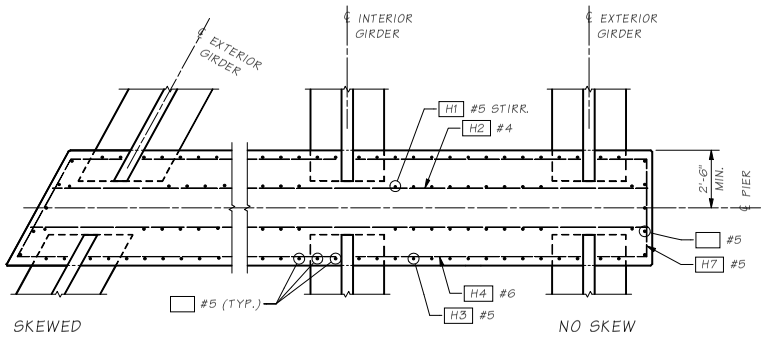

SECTION B

ELEVATION AT TOP OF OAK BLOCK

GIRDER	PIER ?	
	BACK STATION	AHEAD STATION

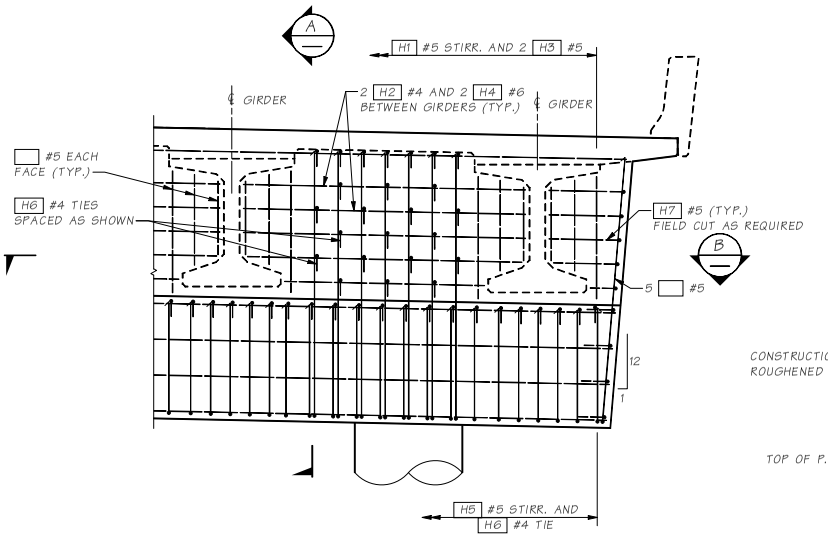

ELEVATION

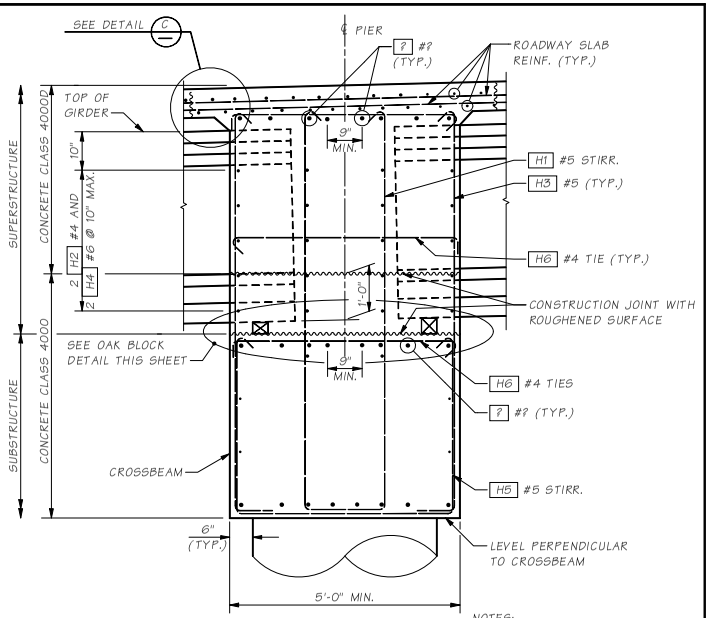

SECTION A

NOTES:
1. LONGITUDINAL DIMENSIONS ARE NORMAL TO SKEW.
2. FOR CONCRETE PLACEMENT PROCEDURE SEE "SUPERSTRUCTURE CONSTRUCTION SEQEUNCE" SHEET.

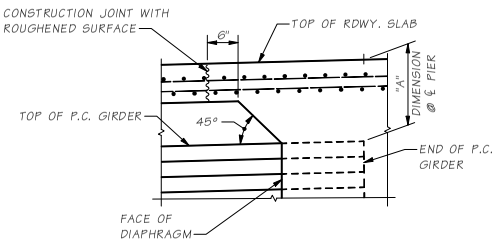

DETAIL C

DIAPHRAGM REINFORCING NOT SHOWN FOR CLARITY

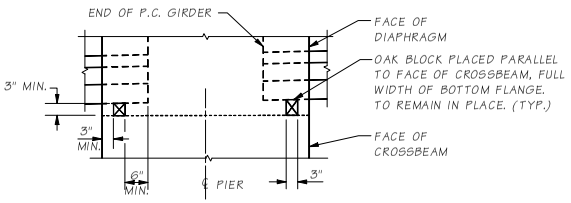

OAK BLOCK DETAIL

LONGITUDINAL DIMENSIONS ARE NORMAL TO SKEW

NOTE TO DESIGNER

The actual bar size and spacing shall be determined by the designer.

Bridge Design Engr.	M:\STANDARDS\Girders\WF I-Girders\WF50G\WF50G_FIX_FLUSH_FACE_INTER_PIER_DIAPH_DET.MAN									
Supervisor						REGION NO.	STATE	FED. AID PROJ. NO.	SHEET NO.	TOTAL SHEETS
Designed By						10	WASH.			
Checked By						JOB NUMBER				
Detailed By										
Bridge Projects Engr.										
Prelim Plan By										
Architect/Specialist	DATE	REVISION		BY	APP'D					

BRIDGE AND STRUCTURES OFFICE

Washington State Department of Transportation

STANDARD PRESTRESSED CONCRETE GIRDERS

WF50G FIXED FLUSH-FACE DIAPHRAGM AT INTERMEDIATE PIER DETAILS

BRIDGE SHEET NO.

SHEET OF SHEETS

SR JOB NO. SHEET

5.6-A8-5

Fri Feb 01 13:27:20 2008

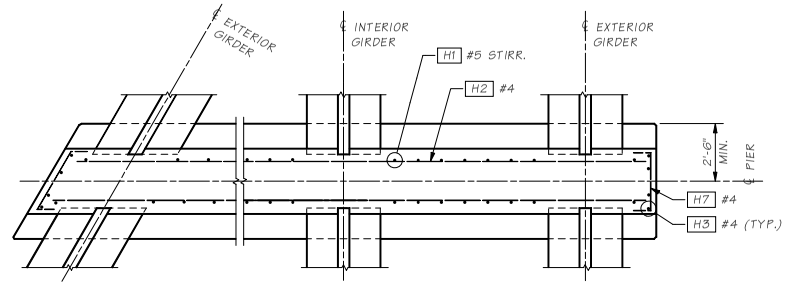

SECTION B

ELEVATION AT TOP OF OAK BLOCK

GIRDER	PIER ?	
	BACK STATION	AHEAD STATION

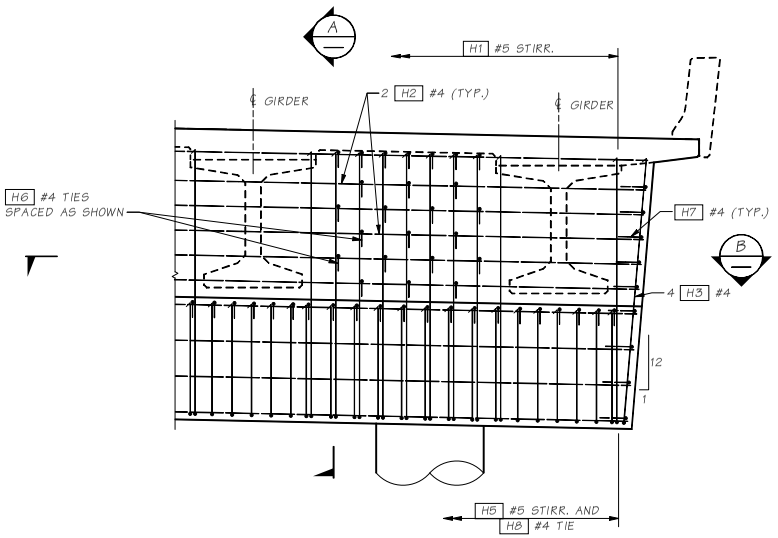

ELEVATION

NOTE TO DESIGNER

The actual bar size and spacing shall be determined by the designer.

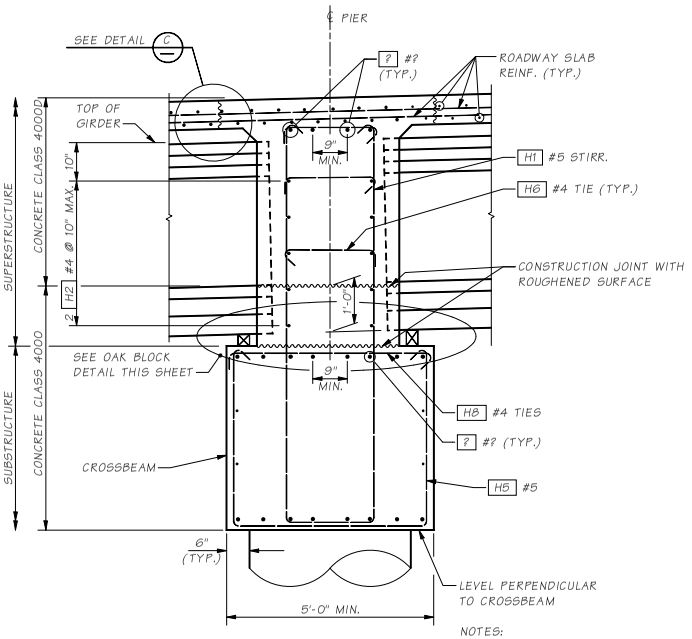

SECTION A

NOTES:
1. LONGITUDINAL DIMENSIONS ARE NORMAL TO SKEW.
2. FOR CONCRETE PLACEMENT PROCEDURE SEE "SUPERSTRUCTURE CONSTRUCTION SEQEUNCE" SHEET.

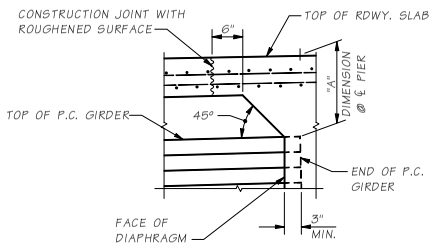

DETAIL C

DIAPHRAGM REINFORCING NOT SHOWN FOR CLARITY

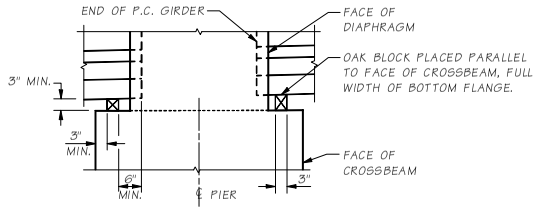

OAK BLOCK DETAIL

LONGITUDINAL DIMENSIONS ARE NORMAL TO SKEW

Bridge Design Engr.	M:\STANDARDS\Girders\WF I-Girders\WF50G\WF50G_FIX_RECESSED_FACE_INTER_PIER_DIAPH_DET.MAN				REGION NO.	STATE	FED. AID PROJ. NO.	SHEET NO.	TOTAL SHEETS	BRIDGE AND STRUCTURES OFFICE
Supervisor					10	WASH.				Washington State Department of Transportation
Designed By					JOB NUMBER					STANDARD PRESTRESSED CONCRETE GIRDERS
Checked By										WF50G FIXED RECESSED-FACE DIAPHRAGM AT INTERMEDIATE PIER DETAILS
Detailed By										BRIDGE SHEET NO.
Bridge Projects Engr.										SHEET OF SHEETS
Prelim. Plan By										
Architect/Specialist	DATE	REVISION	BY	APP'D						

Fri Feb 01 13:27:28 2008

SR JOB NO. SHEET 5.6-A8-6

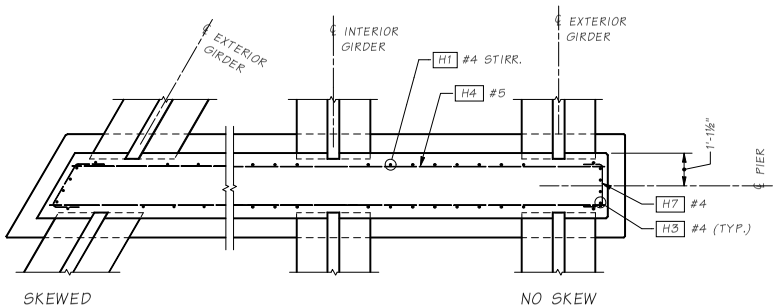

SECTION B

ELEVATION AT TOP OF OAK BLOCK

GIRDER	PIER ?	
	BACK STATION	AHEAD STATION

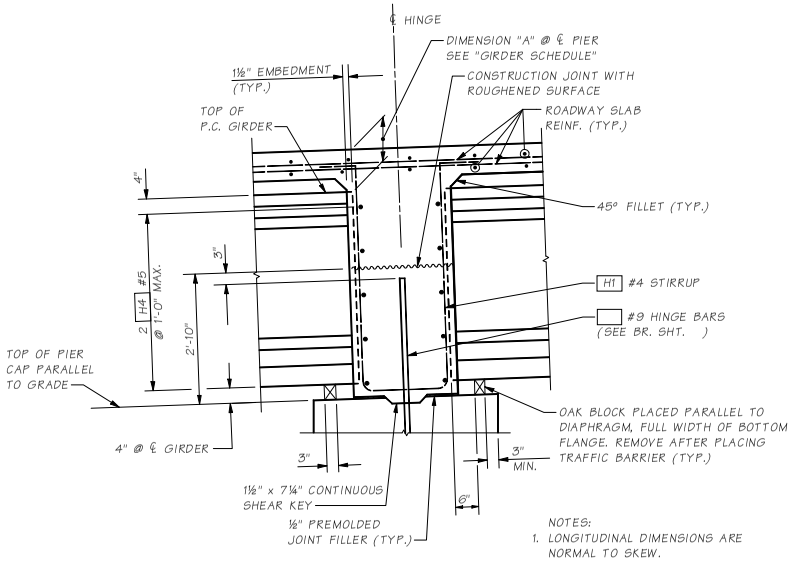

SECTION A

NOTES:
1. LONGITUDINAL DIMENSIONS ARE NORMAL TO SKEW.
2. FOR CONCRETE PLACEMENT PROCEDURE SEE "SUPERSTRUCTURE CONSTRUCTION SEQEUNCE" SHEET.
3. EXTENDED STRANDS AND GIRDER REINFORCING NOT SHOWN FOR CLARITY.

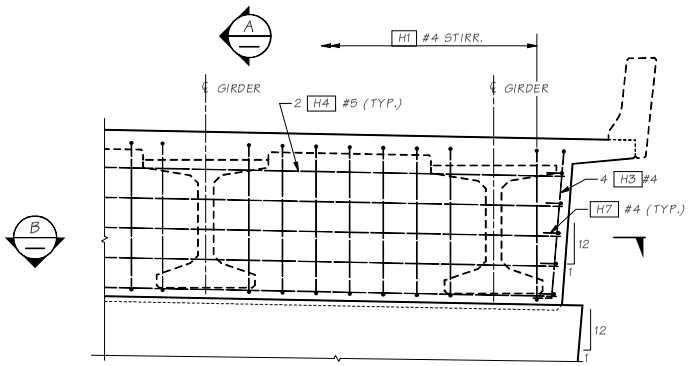

ELEVATION

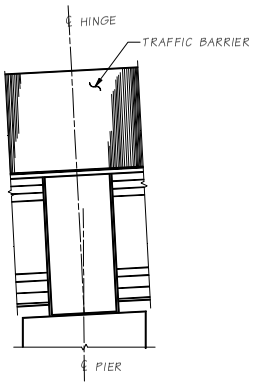

END VIEW
HINGE DIAPHRAGM

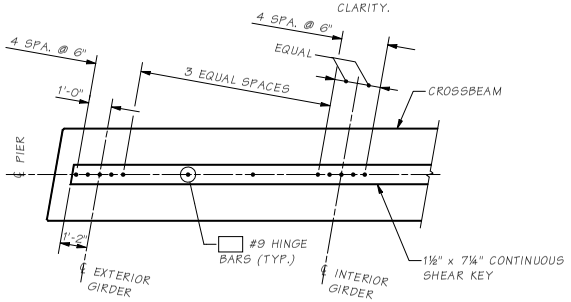

HINGE BAR PLAN

Hinge bar plan is shown for designer. The actual hinge bars detail shall be shown on the crossbeam details sheet.

Bridge Design Engr.	M:\STANDARDS\Girders\WF I-Girders\WF50G\WF50G_HINGE_DIAPHRAGM_INTER_PIER_DIAPH_DET.MAN				REGION NO.	STATE	FED. AID PROJ. NO.	SHEET NO.	TOTAL SHEETS
Supervisor					10	WASH.			
Designed By					JOB NUMBER				
Checked By									
Detailed By									
Bridge Projects Engr.									
Prelim. Plan By									
Architect/Specialist	DATE	REVISION	BY	APP'D					

BRIDGE AND STRUCTURES OFFICE

Washington State Department of Transportation

STANDARD PRESTRESSED CONCRETE GIRDERS

WF50G HINGE DIAPHRAGM AT INTERMEDIATE PIER DETAILS

BRIDGE SHEET NO.

SHEET OF SHEETS

SR ____ JOB NO. ____ SHEET ____

5.6-A8-7

Fri Feb 01 13:27:34 2008

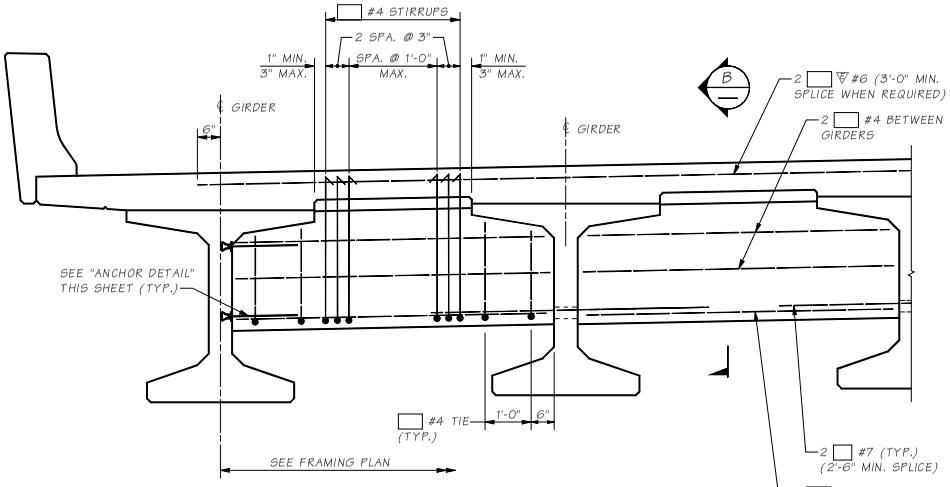

ELEVATION
INTERMEDIATE DIAPHRAGM

DIMENSIONS ARE ALONG DIAPHRAGM

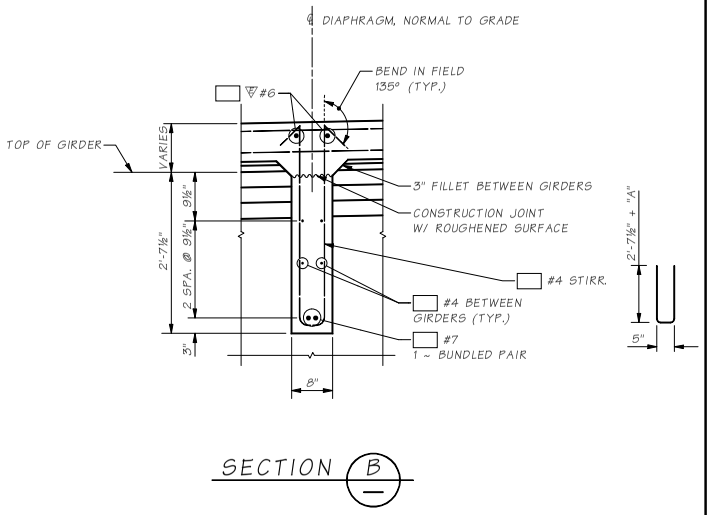

SECTION B

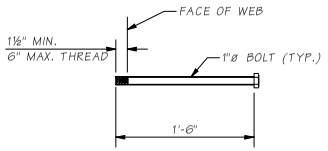

ANCHOR DETAIL

ASTM A-307

NOTE:

GIRDERS SHALL BE HELD RIGIDLY IN PLACE WHEN DIAPHRAGMS ARE PLACED. REINFORCING BAR SHALL BE THREADED THROUGH HOLES IN GIRDERS PRIOR TO PLACING OF EXTERIOR GIRDERS. SEE "GIRDER DETAILS" SHEET FOR DIMENSION "A".

Bridge Design Engr.	M:\STANDARDS\Girders\WF I-Girders\WF50G\WF50G_INTER_DIAPHRAGM_DET.MAN				REGION NO.	STATE	FED. AID PROJ. NO.	SHEET NO.	TOTAL SHEETS	BRIDGE AND STRUCTURES OFFICE
Supervisor					10	WASH.				Washington State Department of Transportation
Designed By					JOB NUMBER					STANDARD PRESTRESSED CONCRETE GIRDERS
Checked By										WF50G INTERMEDIATE DIAPHRAGM DETAILS
Detailed By										BRIDGE SHEET NO. / SHEET / OF / SHEETS
Bridge Projects Engr.										
Prelim Plan By										
Architect/Specialist	DATE	REVISION	BY	APP'D						

SR JOB NO. SHEET
5.6-A8-8

Fri Feb 01 13:27:42 2008

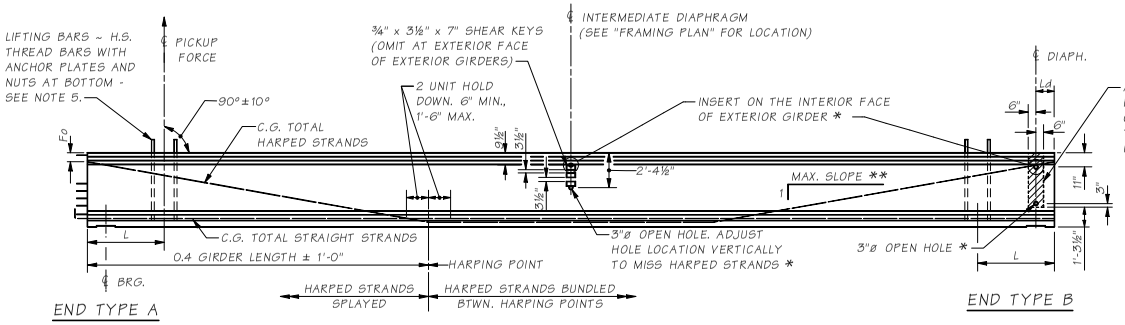

GIRDER ELEVATION

* OMIT HOLES AND PLACE INSERTS ON THE INTERIOR FACE OF EXTERIOR GIRDERS. PLACE HOLES AND INSERTS PARALLEL TO SKEW. INSERTS SHALL BE 1"ø BURKE HI-TENSILE, LANCASTER MALLEABLE, DAYTON-SUPERIOR F-62 FLARED THIN SLAB (1" x 4⅝") FERRULE OR APPROVED EQUAL. (TYP.)

** MAXIMUM SLOPE FOR STRANDS
6 : 1 FOR EACH ½"ø STRAND OR
8 : 1 FOR EACH 0.6"ø STRAND

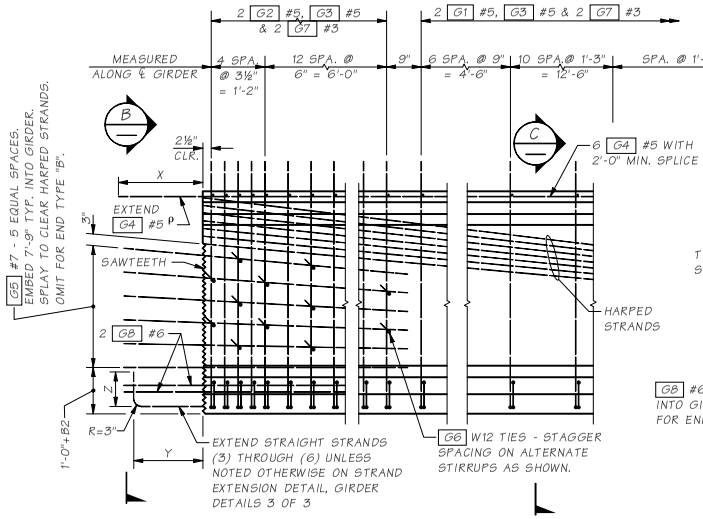

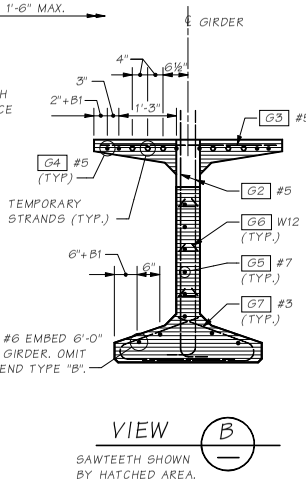

VIEW B

SAWTEETH SHOWN BY HATCHED AREA.

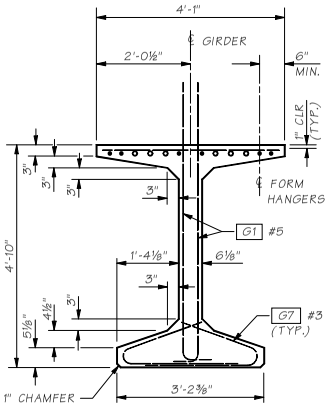

SECTION C

TYPICAL END ELEVATION

END TYPE C SHOWN, OTHER END TYPES SIMILAR.

ρ FIELD BENDING REQUIRED TO OBTAIN 1½" CONCRETE COVER AT PAVEMENT SEAT.

(stirrup spacing shall be determined by the designer)

Diaphragm Type	END TYPE	BEARING RECESS	X	Y	Z	SAWTEETH
End Diaph. on Girder	A	YES	1'-10"	1'-6"	9"	YES
"L" Abutment	B	YES	0"	0"	0"	NO
Hinge Diaph. on Interm. Pier	C	NO	1'-10"	1'-6"	9"	YES
Fixed Diaph. @ Interm. Pier	D	NO	1'-10"	ALT. 1 OR ALT. 2 STRAND EXTENSION		YES

INTERMEDIATE DIAPHRAGM:
1/4 points of span for span lengths over 120'-0"
1/3 points of span for span lengths 80'-0" to 120'-0"
1/2 points of span for span lengths less than 40'-0" to 80'-0"
No intermediate diaphragm for span lengths 40'-0" or less.

FOR END TYPE "C"

ENDS AHEAD ON STATION
G5 BARS LEFT OF ℄
B1 = 0" (G4 , G8)
B2 = 0" (G5)
ENDS BACK ON STATION
G5 BARS RIGHT OF ℄
B1 = 1½"(G4 , G8)
B2 = 3" (G5)

MARK	LOCATION	SIZE	
G1	GIRDER STIRRUPS	5	
G2	GIRDER END STIRRUPS	5	
G3	GIRDER TOP FLANGE	5	STR.
G4	GIRDER LONGIT. FULL LENGTH	5	STR.
G5	GIRDER END LONGIT.	7	STR.
G6	GIRDER END TIES	W12δ	
G7β	GIRDER BOT. FLANGE TIES	3	
G8	GIRDER END LONGIT.	6	STR.
G9β	GIRDER BOT. FLANGE TIES	3	
G10β	GIRDER BOT. FLANGE TIES	3	

BENDING DIAGRAM (ALL DIMENSIONS ARE OUT TO OUT)
NOTE: FOR DIMENSION "A", SEE "GIRDER SCHEDULE"

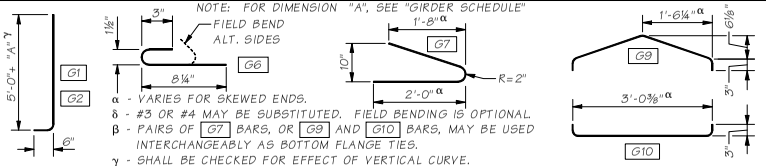

α - VARIES FOR SKEWED ENDS.
δ - #3 OR #4 MAY BE SUBSTITUTED. FIELD BENDING IS OPTIONAL.
β - PAIRS OF G7 BARS, OR G9 AND G10 BARS, MAY BE USED INTERCHANGEABLY AS BOTTOM FLANGE TIES.
γ - SHALL BE CHECKED FOR EFFECT OF VERTICAL CURVE.

Bridge Design Engr.	M:\STANDARDS\Girders\WF I-Girders\WF58BG\WF58BG1.man				REGION NO.	STATE	FED. AID PROJ. NO.	SHEET NO. / TOTAL SHEETS
Supervisor					10	WASH.		
Designed By					JOB NUMBER			
Checked By								
Detailed By								
Bridge Projects Engr.								
Prelim. Plan By								
Architect/Specialist	DATE	REVISION	BY	APP'D				

BRIDGE AND STRUCTURES OFFICE

Washington State Department of Transportation

STANDARD PRESTRESSED CONCRETE GIRDERS

WF58G GIRDER DETAILS 1 OF 3

BRIDGE SHEET NO. / SHEET / OF / SHEETS

SR ____ JOB NO. ____ SHEET ____

5.6-A9-1

Fri Feb 01 13:29:38 2008

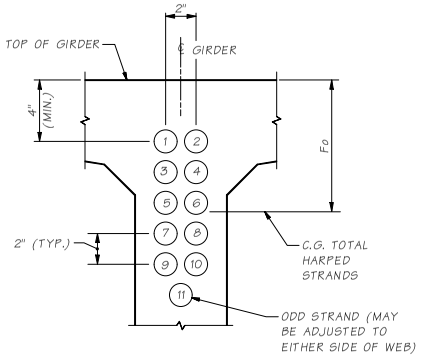

STRAND PATTERN AT GIRDER END

HARPED STRAND LOCATION SEQUENCE SHALL BE AS SHOWN (1), (2) ETC.

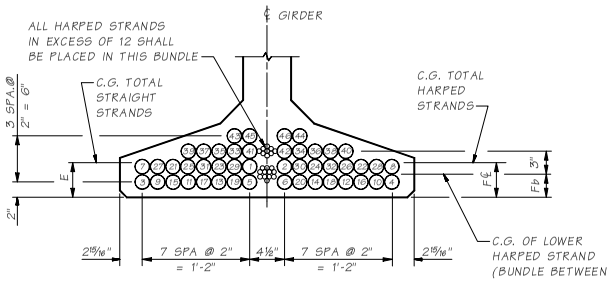

STRAND PATTERN AT ℄ SPAN

STRAIGHT STRAND LOCATION SEQUENCE SHALL BE AS SHOWN (1), (2) ETC.

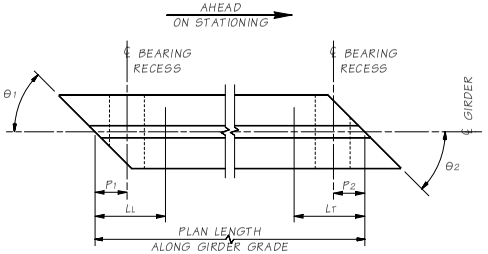

NOTE:
LL AND LT ARE SHIPPING SUPPORT LOCATIONS AT LEADING AND TRAILING ENDS, RESPECTIVELY.

GIRDER SCHEDULE

DIMENSION "A" AT ℄ BEARINGS = BASED ON GIRDER DEFLECTION = "D" AT TIME OF SLAB PLACEMENT (120 DAYS)

SPAN	GIRDER	END 1 TYPE	END 2 TYPE	L	LL	LT	θ1 (DEG.)	θ2 (DEG.)	P1	P2	PLAN LENGTH (ALONG GIRDER GRADE)	MIN. CONC. COMP. STRENGTH @ FINAL F'C (KSI)	MIN. CONC. COMP. STRENGTH @ RELEASE F'CI (KSI)	HARPED NO. OF STRANDS	HARPED JACKING FORCE (KIPS)	STRAIGHT NO. OF STRANDS	STRAIGHT JACKING FORCE (KIPS)	TEMPORARY NO. OF STRANDS	TEMPORARY JACKING FORCE (KIPS)	LOCATION OF C.G. STRANDS E	LOCATION OF C.G. STRANDS F℄	LOCATION OF C.G. STRANDS Fb	LOCATION OF C.G. STRANDS Fo	C	D @ 40 DAYS	D @ 120 DAYS	Ld
"	"	"	"	"	"	"	"	"	"	"	"	"	"	"	"	"	"	"	"	"	"	"	"	"	"	"	"	"
"	"	"	"	"	"	"	"	"	"	"	"	"	"	"	"	"	"	"	"	"	"	"	"	"	"	"	"	"

NOTE:
Dimensions shall be shown in Imperial units to the nearest 1/8th inch.

The number of harped strands should not exceed ½ of the number of straight strands.

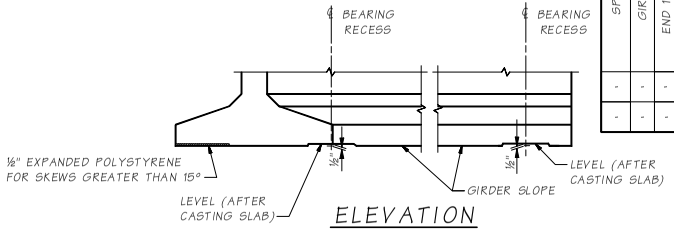

ELEVATION

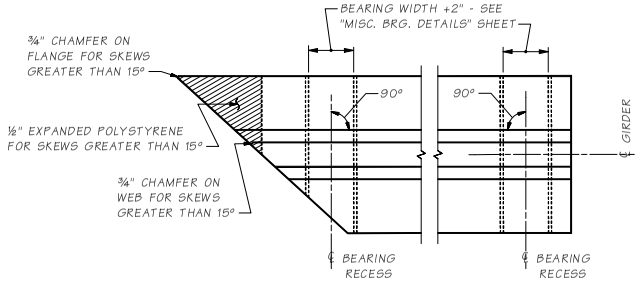

PLAN

BEARING RECESS AND BOTTOM FLANGE SPALL PROTECTION DETAIL

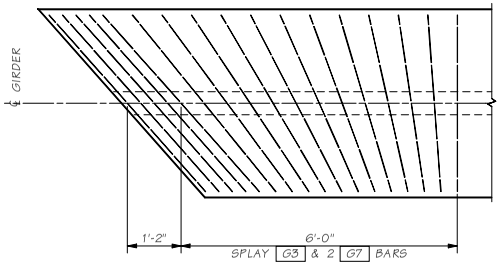

TRANSVERSE REINFORCING SKEWED ENDS

ONLY TRANSVERSE REINF. SHOWN

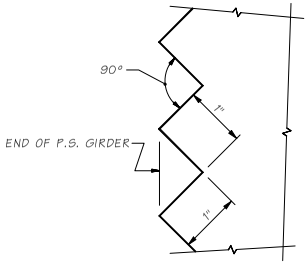

SAWTOOTH DETAILS

SAWTEETH ARE FULL WIDTH - USE SAWTOOTH KEYS FROM BOTTOM OF BOTTOM FLANGE TO BOTTOM OF LOWEST HARPED STRAND AS WELL AS TOP FLANGE ADJACENT TO HARPED STRANDS AS SHOWN IN VIEW B - GIRDER DETAILS 1 OF 3

Bridge Design Engr.	M:\STANDARDS\Girders\WF I-Girders\WF58G\WF58G2.man										
Supervisor											
Designed By											
Checked By											
Detailed By											
Bridge Projects Engr.											
Prelim. Plan By											
Architect/Specialist	DATE	REVISION		BY	APP'D						

REGION NO.	STATE	FED. AID PROJ. NO.	SHEET NO.	TOTAL SHEETS
10	WASH.			
JOB NUMBER				

BRIDGE AND STRUCTURES OFFICE

Washington State Department of Transportation

STANDARD PRESTRESSED CONCRETE GIRDERS

WF58G GIRDER DETAILS 2 OF 3

BRIDGE SHEET NO. / SHEET / OF / SHEETS

SR ____ JOB NO. ____ SHEET ____

5.6-A9-2

Fri Feb 01 13:29:43 2008

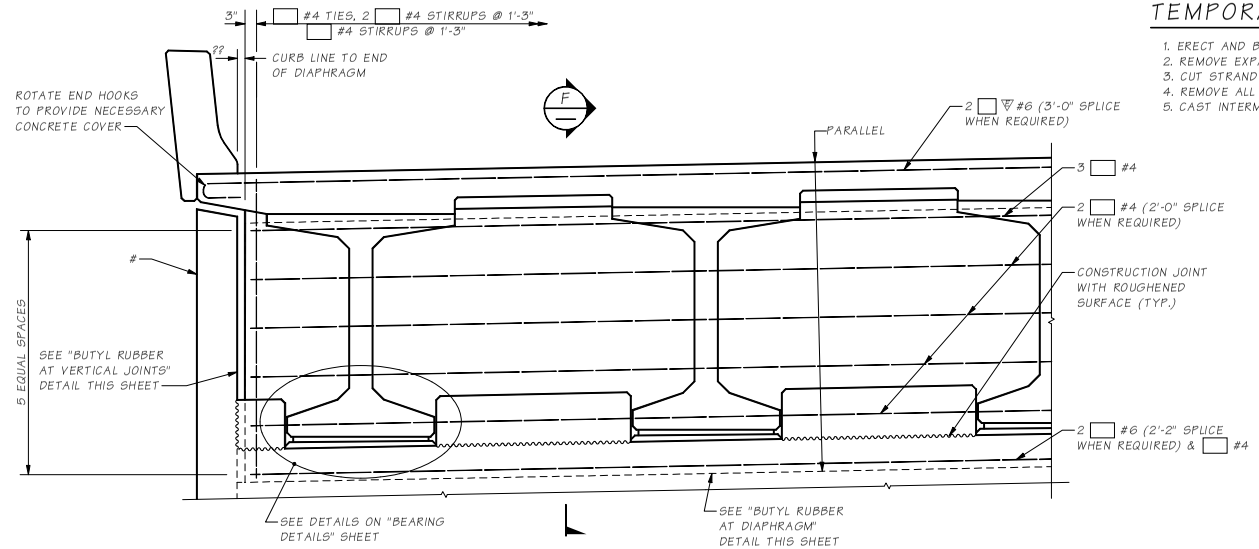

ELEVATION END DIAPHRAGM

DIMENSIONS ARE ALONG DIAPHRAGM

\# If ground line is less than 2'-0" minimum below the bottom of girder at front face of abutment a curtain wall shall be provided.

TEMPORARY STRAND CUTTING SEQUENCE

1. ERECT AND BRACE GIRDERS.
2. REMOVE EXPANDED POLYSTYRENE IN 2" x 2" RECESSES IN TOP FLANGE OF GIRDERS.
3. CUT STRAND AND PLASTIC SLEEVE IN 2" x 2" RECESS.
4. REMOVE ALL MOISTURE IN RECESS PRIOR TO FILLING RECESS WITH GROUT.
5. CAST INTERMEDIATE & END DIAPHRAGMS.

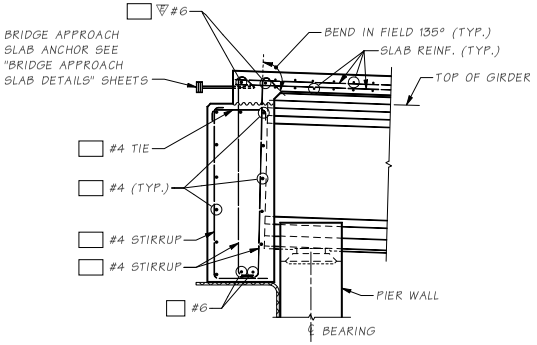

SECTION F

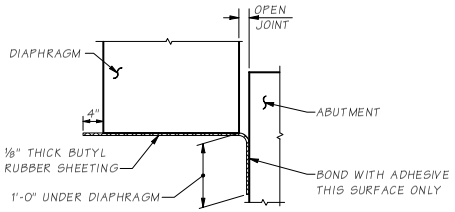

ELEVATION BUTYL RUBBER AT DIAPHRAGM

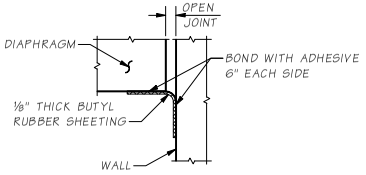

PLAN BUTYL RUBBER AT VERTICAL JOINTS

Bridge length	Open Joint
L ≤ 200'	** = 1.5"
200' < L ≤ 300'	** = 2.0"
300' < L ≤ 400'	** = 2.5"
L > 400'	Special design

* Revise based on size of Open Joint

NOTE:
GIRDERS SHALL BE HELD RIGIDLY IN PLACE WHEN DIAPHRAGMS ARE PLACED.

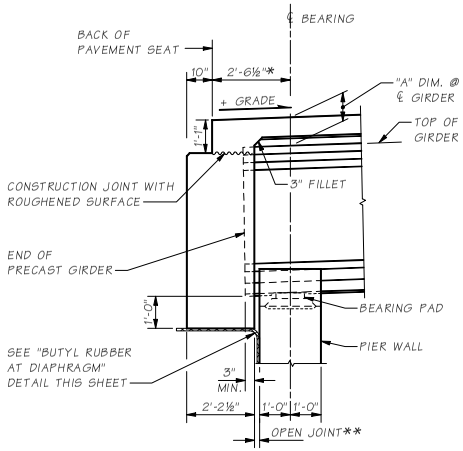

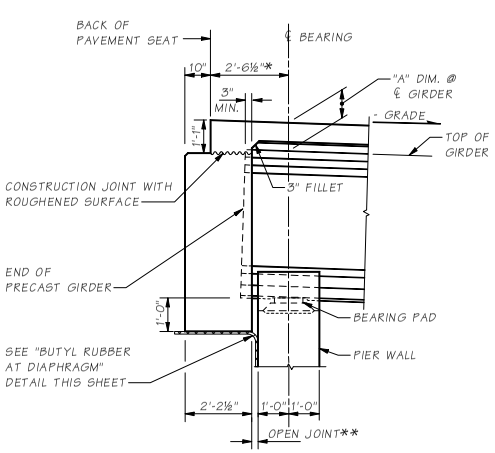

END DIAPHRAGM GEOMETRY

SEE "GIRDER DETAILS" SHEET FOR DIMENSION "A".
ALL LONGITUDINAL DIMENSIONS ARE NORMAL TO SKEW.

Bridge Design Engr.	M:\STANDARDS\Girders\WF I-Girders\WF58G\WF58G_END_DIA_ON_GIR.MAN				REGION NO.	STATE	FED. AID PROJ. NO.	SHEET NO.	TOTAL SHEETS
Supervisor					10	WASH.			
Designed By					JOB NUMBER				
Checked By									
Detailed By									
Bridge Projects Engr.									
Prelim Plan By									
Architect/Specialist	DATE	REVISION	BY	APP'D					

BRIDGE AND STRUCTURES OFFICE

Washington State Department of Transportation

STANDARD PRESTRESSED CONCRETE GIRDERS

WF58G END DIAPHRAGM ON GIRDER DETAILS

BRIDGE SHEET NO.
SHEET OF SHEETS

SR ____ JOB NO. ____ SHEET ____

5.6-A9.3

Fri Feb 01 13:29:50 2008

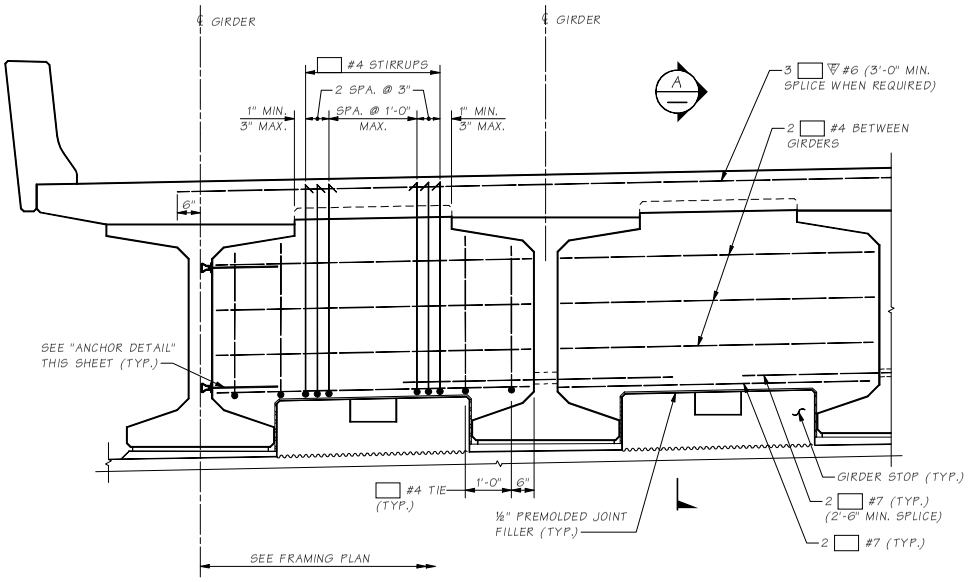

ELEVATION END DIAPHRAGM

DIMENSIONS ARE ALONG DIAPHRAGM

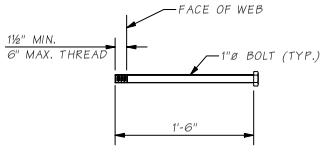

ANCHOR DETAIL

ASTM A-307

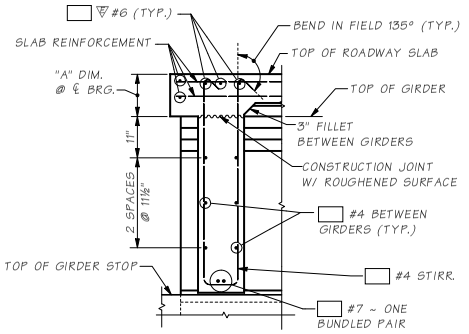

SECTION A

TEMPORARY STRAND CUTTING SEQUENCE

1. ERECT AND BRACE GIRDERS.
2. REMOVE EXPANDED POLYSTYRENE IN 2" x 2" RECESSES IN TOP FLANGE OF GIRDERS.
3. CUT STRAND AND PLASTIC SLEEVE IN 2" x 2" RECESS.
4. REMOVE ALL MOISTURE IN RECESS PRIOR TO FILLING RECESS WITH GROUT.
5. CAST INTERMEDIATE & END DIAPHRAGMS.

NOTE:

GIRDERS SHALL BE HELD RIGIDLY IN PLACE WHEN DIAPHRAGMS ARE PLACED. REINFORCING BAR SHALL BE THREADED THROUGH HOLES IN GIRDERS PRIOR TO PLACING OF EXTERIOR GIRDERS. SEE "GIRDER DETAILS" SHEET FOR DIMENSION "A".

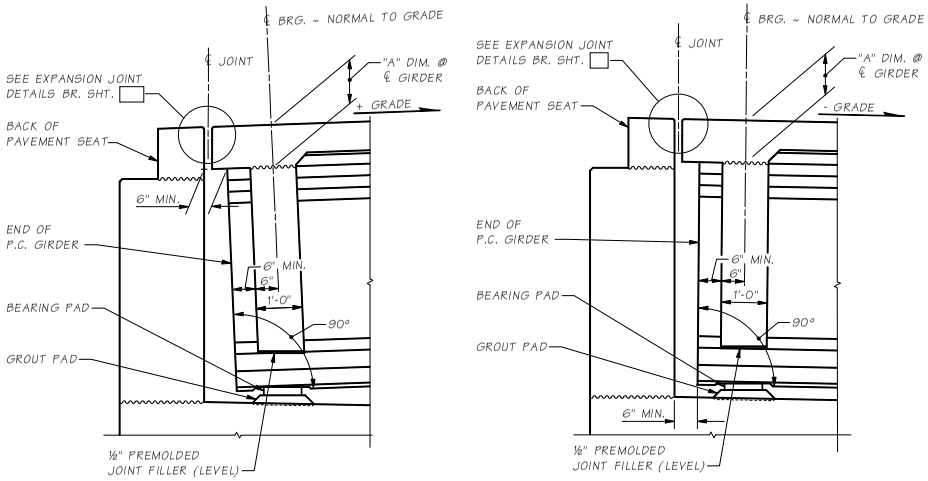

ROADWAY EXPANSION JOINT AT END PIERS

LONGITUDINAL DIMENSIONS ARE NORMAL TO SKEW.
GIRDER STOP NOT SHOWN FOR CLARITY.

Bridge Design Engr.	M:\STANDARDS\Girders\WF I-Girders\WF58G\WF58G_ABUT_PIER_DIAPH_DET.MAN				REGION NO.	STATE	FED. AID PROJ. NO.	SHEET NO.	TOTAL SHEETS
Supervisor					10	WASH			
Designed By					JOB NUMBER				
Checked By									
Detailed By									
Bridge Projects Engr.									
Prelim Plan By									
Architect/Specialist	DATE	REVISION	BY	APP'D					

BRIDGE AND STRUCTURES OFFICE

Washington State Department of Transportation

STANDARD PRESTRESSED CONCRETE GIRDERS

WF58G ABUTMENT TYPE PIER DIAPHRAGM DETAILS

BRIDGE SHEET NO. | SHEET | OF | SHEETS

SR | JOB NO. | SHEET

5.6-A9-4

Fri Feb 01 13:29:56 2008

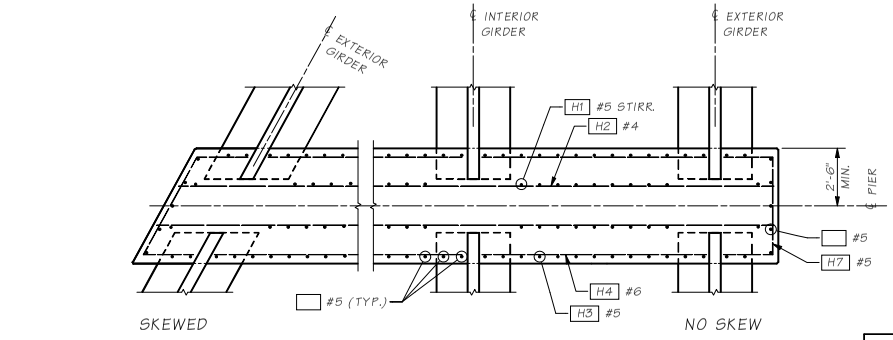

SECTION B

ELEVATION AT TOP OF OAK BLOCK

GIRDER	PIER ?	
	BACK STATION	AHEAD STATION

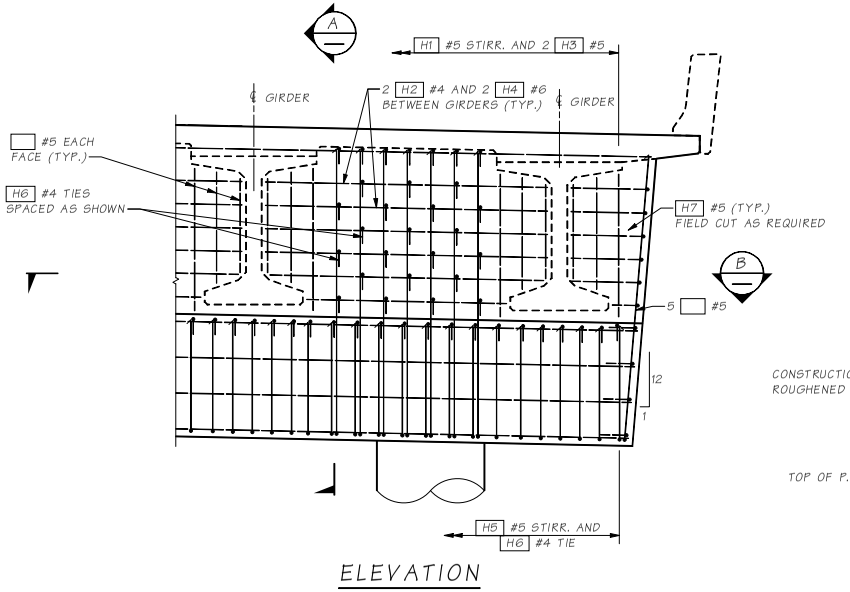

ELEVATION

NOTE TO DESIGNER

The actual bar size and spacing shall be determined by the designer.

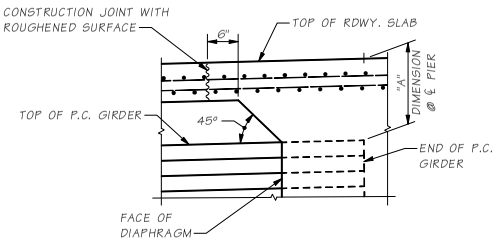

DETAIL C

DIAPHRAGM REINFORCING NOT SHOWN FOR CLARITY

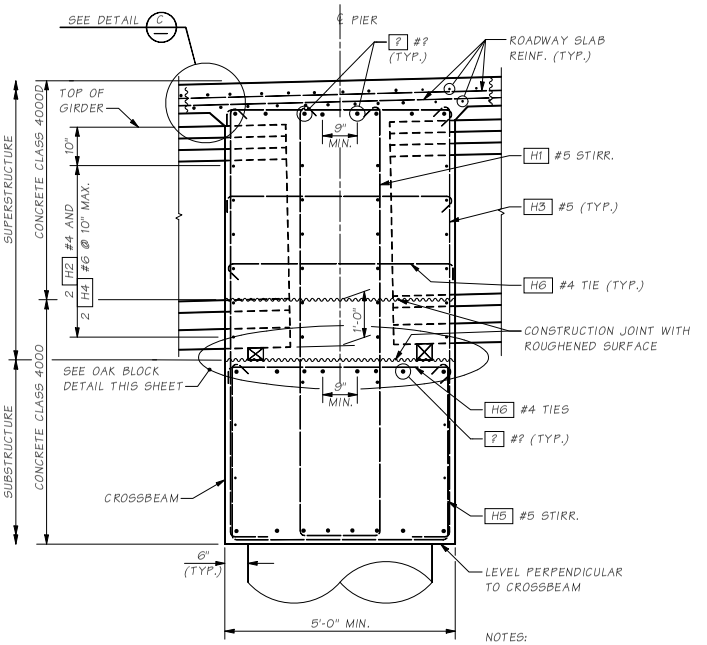

NOTES:
1. LONGITUDINAL DIMENSIONS ARE NORMAL TO SKEW.
2. FOR CONCRETE PLACEMENT PROCEDURE SEE "SUPERSTRUCTURE CONSTRUCTION SEQEUNCE" SHEET.

SECTION A

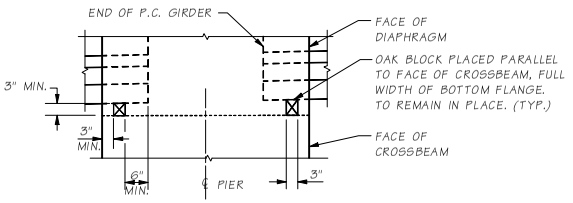

OAK BLOCK DETAIL

LONGITUDINAL DIMENSIONS ARE NORMAL TO SKEW

Bridge Design Engr.	M:\STANDARDS\Girders\WF I-Girders\WF58G\WF58G_FIX_FLUSH_FACE_INTER_PIER_DIAPH_DET.MAN								
Supervisor					REGION NO.	STATE	FED. AID PROJ. NO.	SHEET NO.	TOTAL SHEETS
Designed By					10	WASH			
Checked By					JOB NUMBER				
Detailed By									
Bridge Projects Engr.									
Prelim Plan By									
Architect/Specialist	DATE	REVISION	BY	APP'D					

BRIDGE AND STRUCTURES OFFICE

Washington State Department of Transportation

STANDARD PRESTRESSED CONCRETE GIRDERS

WF58G FIXED FLUSH-FACE DIAPHRAGM AT INTERMEDIATE PIER DETAILS

BRIDGE SHEET NO.

SHEET OF SHEETS

SR ___ JOB NO. ___ SHEET

5.6-A9-5

Fri Feb 01 13:30:01 2008

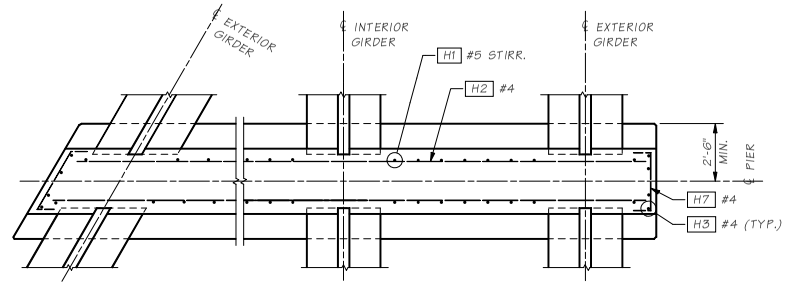

SECTION B

ELEVATION AT TOP OF OAK BLOCK

GIRDER	PIER ?	
	BACK STATION	AHEAD STATION

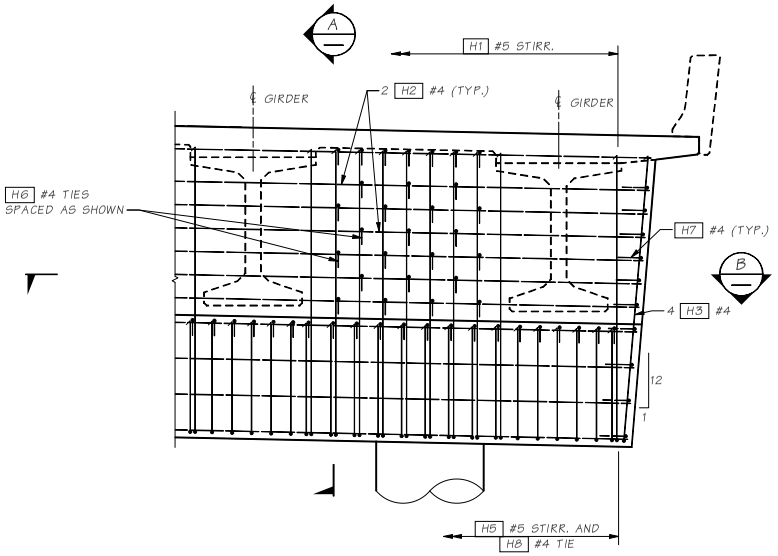

ELEVATION

NOTE TO DESIGNER

The actual bar size and spacing shall be determined by the designer.

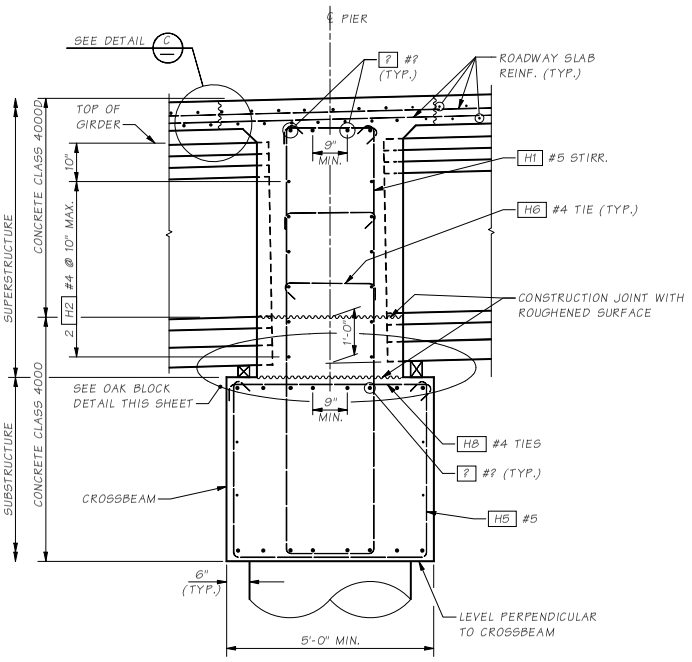

SECTION A

NOTES:
1. LONGITUDINAL DIMENSIONS ARE NORMAL TO SKEW.
2. FOR CONCRETE PLACEMENT PROCEDURE SEE "SUPERSTRUCTURE CONSTRUCTION SEQEUNCE" SHEET.

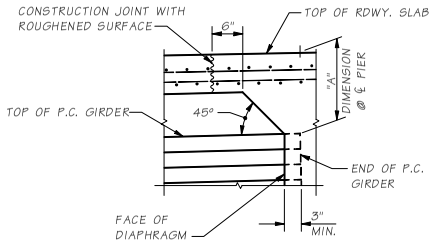

DETAIL C

DIAPHRAGM REINFORCING NOT SHOWN FOR CLARITY

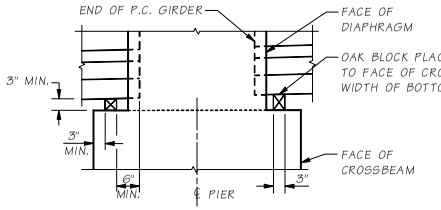

OAK BLOCK DETAIL

LONGITUDINAL DIMENSIONS ARE NORMAL TO SKEW

Bridge Design Engr.	M:\STANDARDS\Girders\WF I-Girders\WF58G\WF58G_FIX_RECESSED_FACE_INTER_PIER_DIAPH_DET.MAN								
Supervisor					REGION NO.	STATE	FED. AID PROJ. NO.	SHEET NO.	TOTAL SHEETS
Designed By					10	WASH.			
Checked By					JOB NUMBER				
Detailed By									
Bridge Projects Engr.									
Prelim. Plan By									
Architect/Specialist	DATE	REVISION	BY	APP'D					

BRIDGE AND STRUCTURES OFFICE

Washington State Department of Transportation

STANDARD PRESTRESSED CONCRETE GIRDERS

WF58G FIXED RECESSED-FACE DIAPHRAGM AT INTERMEDIATE PIER DETAILS

BRIDGE SHEET NO. | SHEET | OF | SHEETS

SR | JOB NO. | SHEET

9-6-A9-6

Fri Feb 01 13:30:08 2008

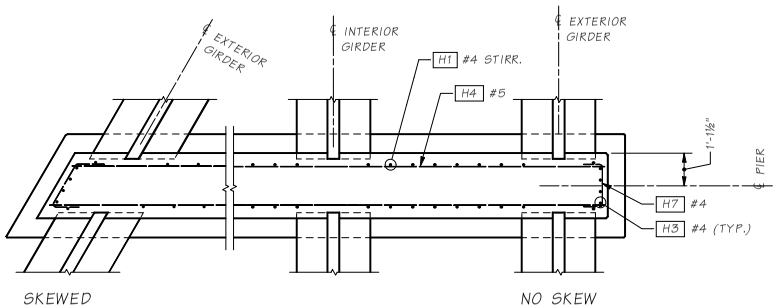

SECTION B

ELEVATION AT TOP OF OAK BLOCK

GIRDER	PIER ?	
	BACK STATION	AHEAD STATION

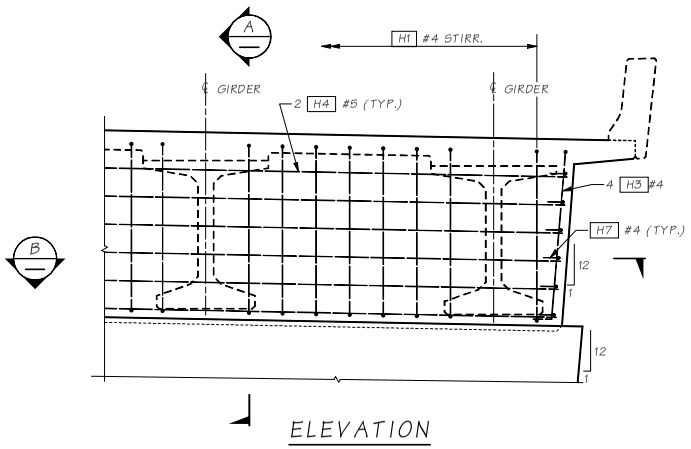

ELEVATION

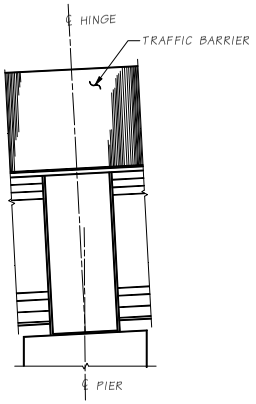

END VIEW
HINGE DIAPHRAGM

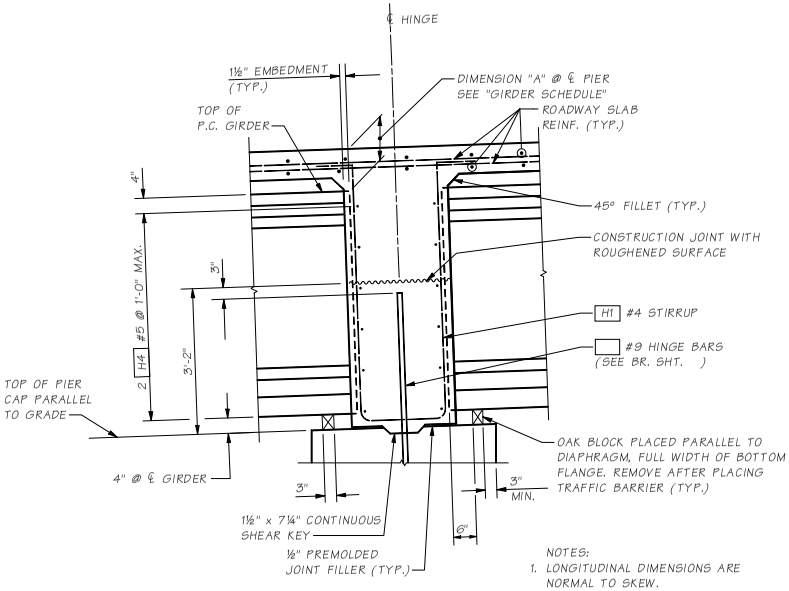

SECTION A

NOTES:
1. LONGITUDINAL DIMENSIONS ARE NORMAL TO SKEW.
2. FOR CONCRETE PLACEMENT PROCEDURE SEE "SUPERSTRUCTURE CONSTRUCTION SEQEUNCE" SHEET.
3. EXTENDED STRANDS AND GIRDER REINFORCING NOT SHOWN FOR CLARITY.

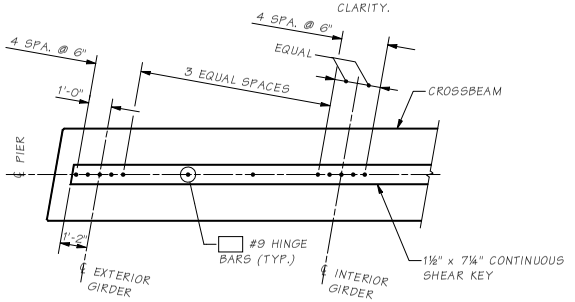

HINGE BAR PLAN

Hinge bar plan is shown for designer. The actual hinge bars detail shall be shown on the crossbeam details sheet.

Bridge Design Engr.	M:\STANDARDS\Girders\WF I-Girders\WF58G\WF58G_HINGE_DIAPHRAGM_INTER_PIER_DIAPH_DET.MAN				REGION NO.	STATE	FED. AID PROJ. NO.	SHEET NO.	TOTAL SHEETS
Supervisor					10	WASH.			
Designed By					JOB NUMBER				
Checked By									
Detailed By									
Bridge Projects Engr.									
Prelim Plan By									
Architect/Specialist	DATE	REVISION	BY	APP'D					

BRIDGE AND STRUCTURES OFFICE

Washington State Department of Transportation

STANDARD PRESTRESSED CONCRETE GIRDERS

WF58G HINGE DIAPHRAGM AT INTERMEDIATE PIER DETAILS

BRIDGE SHEET NO.

SHEET OF SHEETS

SR ___ JOB NO. ___ SHEET ___

5.6-A9-7

Fri Feb 01 13:30:14 2008

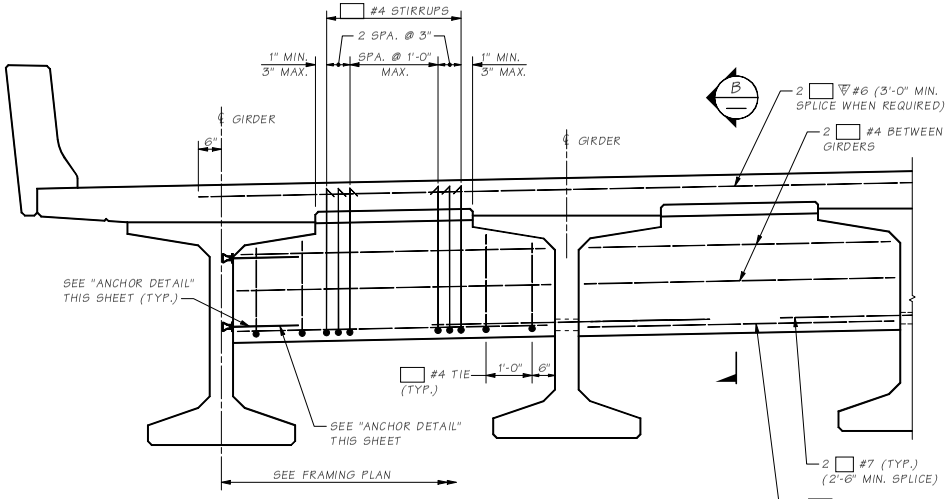

ELEVATION
INTERMEDIATE DIAPHRAGM

DIMENSIONS ARE ALONG DIAPHRAGM

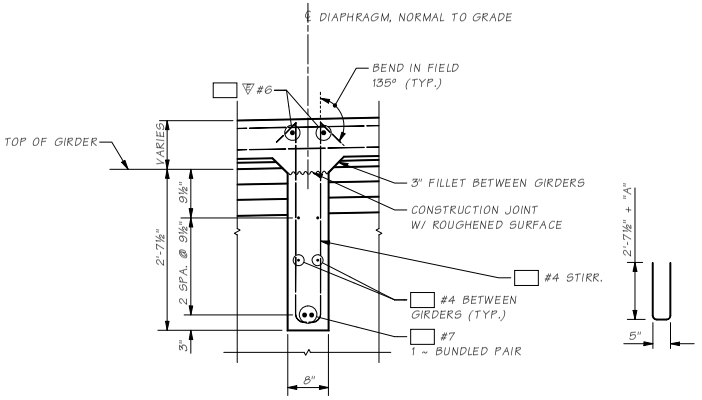

SECTION B

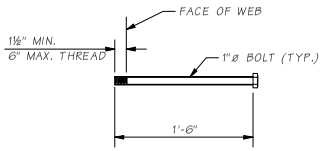

ANCHOR DETAIL

ASTM A-307

NOTE:

GIRDERS SHALL BE HELD RIGIDLY IN PLACE WHEN DIAPHRAGMS ARE PLACED. REINFORCING BAR SHALL BE THREADED THROUGH HOLES IN GIRDERS PRIOR TO PLACING OF EXTERIOR GIRDERS. SEE "GIRDER DETAILS" SHEET FOR DIMENSION "A".

Bridge Design Engr.	M:\STANDARDS\Girders\WF I-Girders\WF58G\WF58G_INTER_DIAPHRAGM_DET.MAN				REGION NO.	STATE	FED. AID PROJ. NO.	SHEET NO.	TOTAL SHEETS
Supervisor					10	WASH.			
Designed By					JOB NUMBER				
Checked By									
Detailed By									
Bridge Projects Engr.									
Prelim. Plan By									
Architect/Specialist	DATE	REVISION	BY	APP'D					

BRIDGE AND STRUCTURES OFFICE

Washington State Department of Transportation

WF58G INTERMEDIATE DIAPHRAGM DETAILS

BRIDGE SHEET NO.

SHEET OF SHEETS

SR FILE NO. SHEET

5.6-A9-8

Fri Feb 01 13:30:24 2008

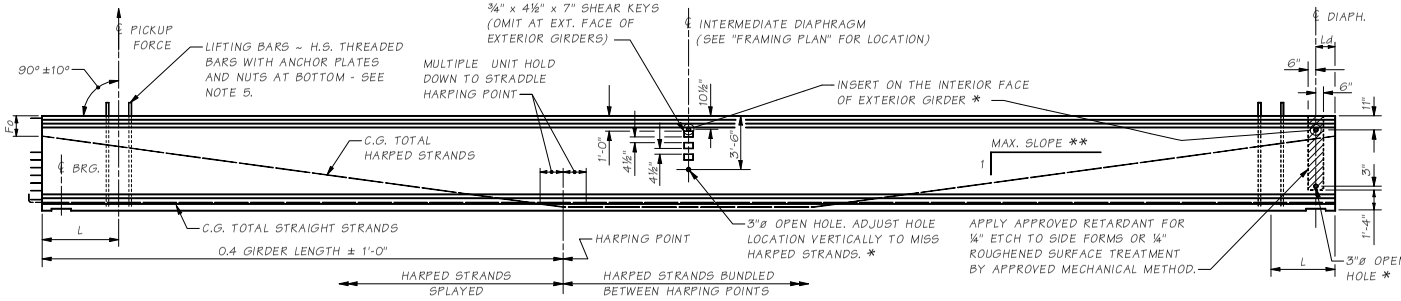

END TYPE A

GIRDER ELEVATION

END TYPE B

* OMIT HOLES AND PLACE INSERTS ON THE INTERIOR FACE OF EXTERIOR GIRDERS. PLACE HOLES AND INSERTS PARALLEL TO SKEW. INSERTS SHALL BE 1"ø BURKE HI-TENSILE, LANCASTER MALLEABLE, DAYTON-SUPERIOR F-62 FLARED THIN SLAB (1" x 4⅝") FERRULE INSERT OR APPROVED EQUAL. (TYP.)

** MAXIMUM SLOPE FOR STRANDS
6 : 1 FOR EACH ½"ø STRAND OR
8 : 1 FOR EACH 0.6"ø STRAND

NOTES

1. PLAN LENGTH SHALL BE INCREASED AS NECESSARY TO COMPENSATE FOR SHORTENING DUE TO PRESTRESS AND SHRINKAGE.
2. ALL PRETENSIONED AND TEMPORARY STRANDS SHALL BE [½"ø OR 0.6"ø] LOW RELAXATION STRANDS (AASHTO M203 GRADE 270.)
3. FOR END TYPES A, C AND D CUT ALL STRANDS FLUSH WITH THE GIRDER ENDS AND PAINT WITH AN APPROVED EPOXY RESIN, EXCEPT FOR EXTENDED STRANDS AS SHOWN. FOR END TYPE B CUT ALL STRANDS 1" BELOW CONCRETE SURFACE AND GROUT WITH AN APPROVED EPOXY GROUT.
4. THE TOP SURFACE OF THE GIRDER FLANGE SHALL BE ROUGHENED IN ACCORDANCE WITH SECTION 6-02.3(25)H OF THE STANDARD SPECIFICATIONS.
5. LIFTING EMBEDMENTS SHALL BE INSTALLED IN ACCORDANCE WITH SECTION 6-02.3(25)L OF THE STANDARD SPECIFICATIONS.
6. CAUTION SHALL BE EXERCISED IN HANDLING AND PLACING GIRDERS. ALL GIRDERS SHALL BE CHECKED BY THE CONTRACTOR TO ENSURE THAT THEY ARE BRACED ADEQUATELY TO PREVENT TIPPING AND TO CONTROL LATERAL BENDING DURING SHIPPING. ONCE ERECTED, ALL GIRDERS SHALL BE BRACED LATERALLY TO PREVENT TIPPING UNTIL THE DIAPHRAGMS ARE CAST AND CURED.
7. FORMS FOR BEARING PAD RECESSES SHALL BE CONSTRUCTED AND FASTENED IN SUCH A MANNER AS TO NOT CAUSE DAMAGE TO THE GIRDER DURING THE STRAND RELEASE OPERATION.
8. TEMPORARY STRANDS SHALL BE EITHER PRETENSIONED OR POST-TENSIONED IN ACCORDANCE WITH SECTION 6-02.3(25)L OF THE STANDARD SPECIFICATIONS. IF PRETENSIONED, THESE TEMPORARY STRANDS SHALL BE UNBONDED OVER ALL BUT THE END 10'-0" OF THE GIRDER LENGTH. AS AN ALTERNATE, TEMPORARY STRANDS MAY BE POST-TENSIONED ON THE SAME DAY THE PRETENSIONING IS RELEASED INTO THE GIRDER.

INTERMEDIATE DIAPHRAGM:
1/5 points of span for span lengths greater than 160'-0"
1/4 points of span for span lengths 120'-0" to 160'-0"
1/3 points of span for span lengths 80'-0" to 120'-0"
1/2 points of span for span lengths less than 80'-0".

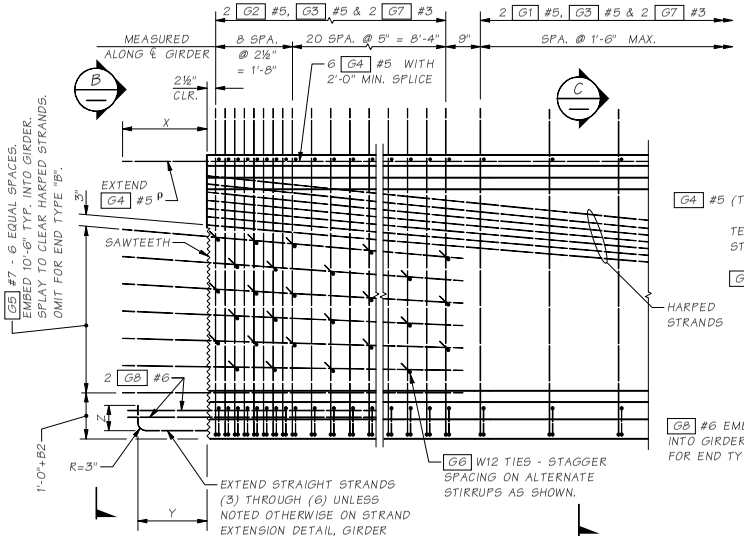

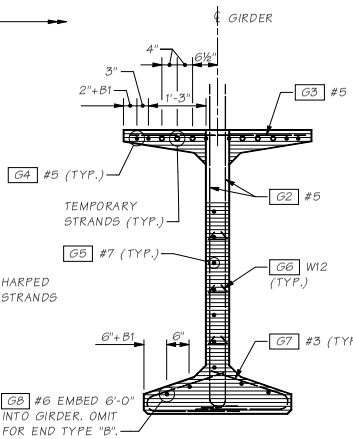

VIEW B

SAWTEETH SHOWN BY HATCHED AREA.

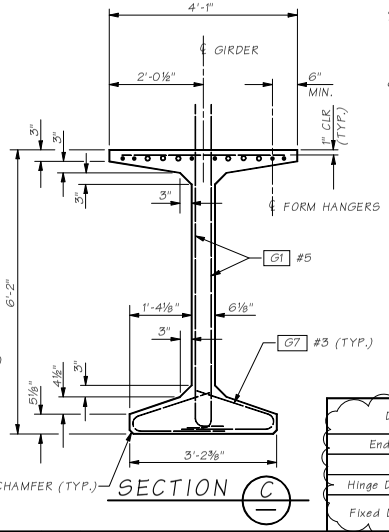

SECTION C

Diaphragm Type	END TYPE	BEARING RECESS	X	Y	Z	SAWTEETH
End Diaph. on Girder	A	YES	1'-10"	1'-6"	9"	YES
"L" Abutment	B	YES	0"	0"	0"	NO
Hinge Diaph. on Interm. Pier	C	NO	1'-10"	1'-6"	9"	YES
Fixed Diaph. @ Interm. Pier	D	NO	1'-10"	ALT. 1 OR ALT. 2 STRAND EXTENSION		YES

TYPICAL END ELEVATION

END TYPE C SHOWN, OTHER END TYPES SIMILAR.

(stirrup spacing shall be determined by the designer)

P FIELD BENDING REQUIRED TO OBTAIN 1½" CONCRETE COVER AT PAVEMENT SEAT.

FOR END TYPE "C"

ENDS AHEAD ON STATION
G5 BARS LEFT OF ℄
B1 = 0" (G4 , G8)
B2 = 0" (G5)

ENDS BACK ON STATION
G5 BARS RIGHT OF ℄
B1 = 1½"(G4 , G8)
B2 = 3" (G5)

MARK	LOCATION	SIZE	
G1	GIRDER STIRRUPS	5	
G2	GIRDER END STIRRUPS	5	
G3	GIRDER TOP FLANGE	5	STR.
G4	GIRDER LONGIT. FULL LENGTH	5	STR.
G5	GIRDER END LONGIT.	7	STR.
G6	GIRDER END TIES	W12 δ	
G7β	GIRDER BOT. FLANGE TIES	3	
G8	GIRDER END LONGIT.	6	STR.
G9β	GIRDER BOT. FLANGE TIES	3	
G10β	GIRDER BOT. FLANGE TIES	3	

BENDING DIAGRAM (ALL DIMENSIONS ARE OUT TO OUT)
NOTE: FOR DIMENSION "A", SEE "GIRDER SCHEDULE"

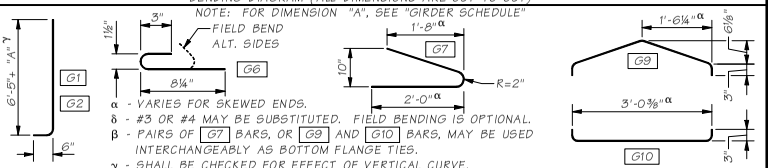

α - VARIES FOR SKEWED ENDS.
δ - #3 OR #4 MAY BE SUBSTITUTED. FIELD BENDING IS OPTIONAL.
β - PAIRS OF G7 BARS, OR G9 AND G10 BARS, MAY BE USED INTERCHANGEABLY AS BOTTOM FLANGE TIES.
γ - SHALL BE CHECKED FOR EFFECT OF VERTICAL CURVE.

Bridge Design Engr.	M:\STANDARDS\Girders\WF I-Girders\WF74G\WF74G1.man							
Supervisor				REGION NO.	STATE	FED. AID PROJ. NO.	SHEET NO.	TOTAL SHEETS
Designed By				10	WASH.			
Checked By				JOB NUMBER				
Detailed By								
Bridge Projects Engr.								
Prelim. Plan By								
Architect/Specialist	DATE	REVISION	BY	APP'D				

BRIDGE AND STRUCTURES OFFICE

Washington State Department of Transportation

STANDARD PRESTRESSED CONCRETE GIRDERS

WF74G GIRDER DETAILS 1 OF 3

BRIDGE SHEET NO. SHEET OF SHEETS

SR JOB NO. 5.6-A10-1 SHEET

Fri Feb 01 13:54:29 2008

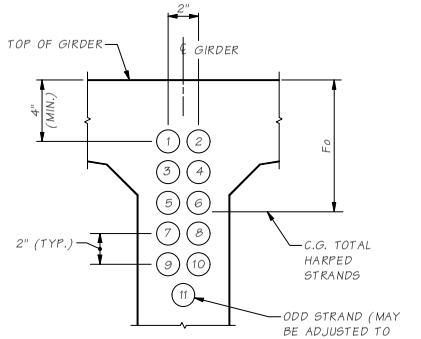

STRAND PATTERN AT GIRDER END

HARPED STRAND LOCATION SEQUENCE SHALL BE AS SHOWN (1), (2) ETC.

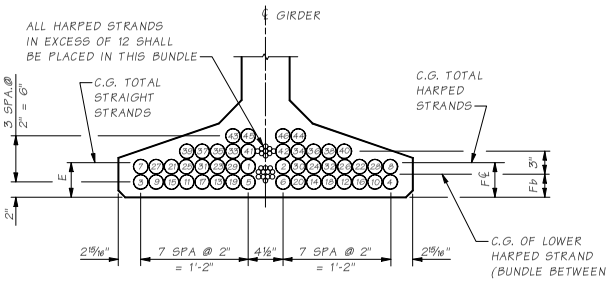

STRAND PATTERN AT ℄ SPAN

STRAIGHT STRAND LOCATION SEQUENCE SHALL BE AS SHOWN (1), (2) ETC.

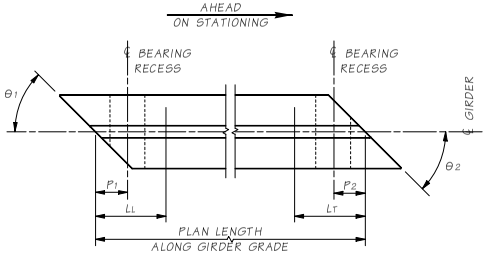

NOTE:
L1 AND Lt ARE SHIPPING SUPPORT LOCATIONS AT LEADING AND TRAILING ENDS, RESPECTIVELY.

GIRDER SCHEDULE

DIMENSION "A" AT ℄ BEARINGS =							BASED ON GIRDER DEFLECTION = "D" AT TIME OF SLAB PLACEMENT (120 DAYS)																			
SPAN	GIRDER	END 1 TYPE	END 2 TYPE	L	L1	Lt	θ1 (DEG.)	θ2 (DEG.)	P1	P2	PLAN LENGTH (ALONG GIRDER GRADE)	MIN. CONC. COMP. STRENGTH @ FINAL F'c (KSI)	MIN. CONC. COMP. STRENGTH @ RELEASE F'ci (KSI)	HARPED NO. OF STRANDS	HARPED JACKING FORCE (KIPS)	STRAIGHT NO. OF STRANDS	STRAIGHT JACKING FORCE (KIPS)	TEMPORARY NO. OF STRANDS	TEMPORARY JACKING FORCE (KIPS)	LOCATION OF C.G. STRANDS E	LOCATION OF C.G. STRANDS F℄	LOCATION OF C.G. STRANDS Fb	LOCATION OF C.G. STRANDS Fo	C	D @ 40 DAYS	D @ 120 DAYS	Ld
"	"	"	"	"	"	"	"	"	"	"	"	"	"	"	"	"	"	"	"	"	"	"	"	"	"	"	"
"	"	"	"	"	"	"	"	"	"	"	"	"	"	"	"	"	"	"	"	"	"	"	"	"	"	"	"

NOTE:
Dimensions shall be shown in Imperial units to the nearest 1/8th inch.

The number of harped strands should not exceed ½ of the number of straight strands.

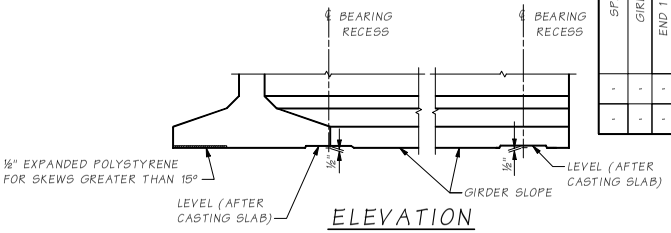

ELEVATION

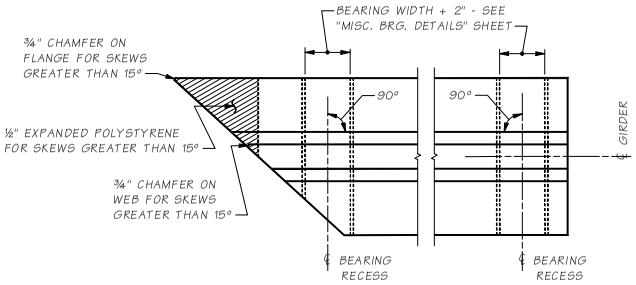

PLAN

BEARING RECESS AND BOTTOM FLANGE SPALL PROTECTION DETAIL

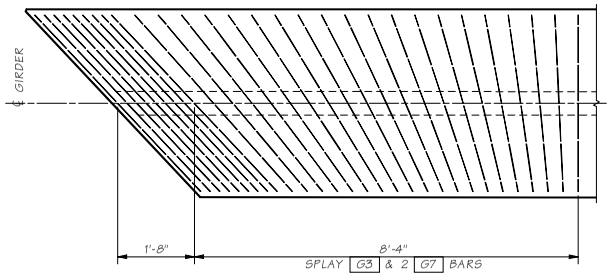

TRANSVERSE REINFORCING SKEWED ENDS

ONLY TRANSVERSE REINF. SHOWN

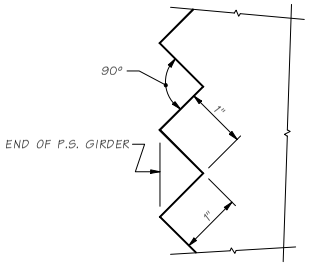

SAWTOOTH DETAILS

SAWTEETH ARE FULL WIDTH - USE SAWTOOTH KEYS FROM BOTTOM OF BOTTOM FLANGE TO BOTTOM OF LOWEST HARPED STRAND AS WELL AS TOP FLANGE ADJACENT TO HARPED STRANDS AS SHOWN IN VIEW B - GIRDER DETAILS 1 OF 3

Bridge Design Engr.	M:\STANDARDS\Girders\WF I-Girders\WF74G\WF74G2.man								
Supervisor									
Designed By									
Checked By									
Detailed By									
Bridge Projects Engr.									
Prelim Plan By									
Architect/Specialist	DATE	REVISION	BY	APP'D					

REGION NO.	STATE	FED. AID PROJ. NO.	SHEET NO.	TOTAL SHEETS
10	WASH.			
JOB NUMBER				

BRIDGE AND STRUCTURES OFFICE

Washington State Department of Transportation

STANDARD PRESTRESSED CONCRETE GIRDERS

WF74G GIRDER DETAILS 2 OF 3

BRIDGE SHEET NO. SHEET OF SHEETS

JOB NO. SHEET SR 5.6-A10-2

Fri Feb 01 13:54:34 2008

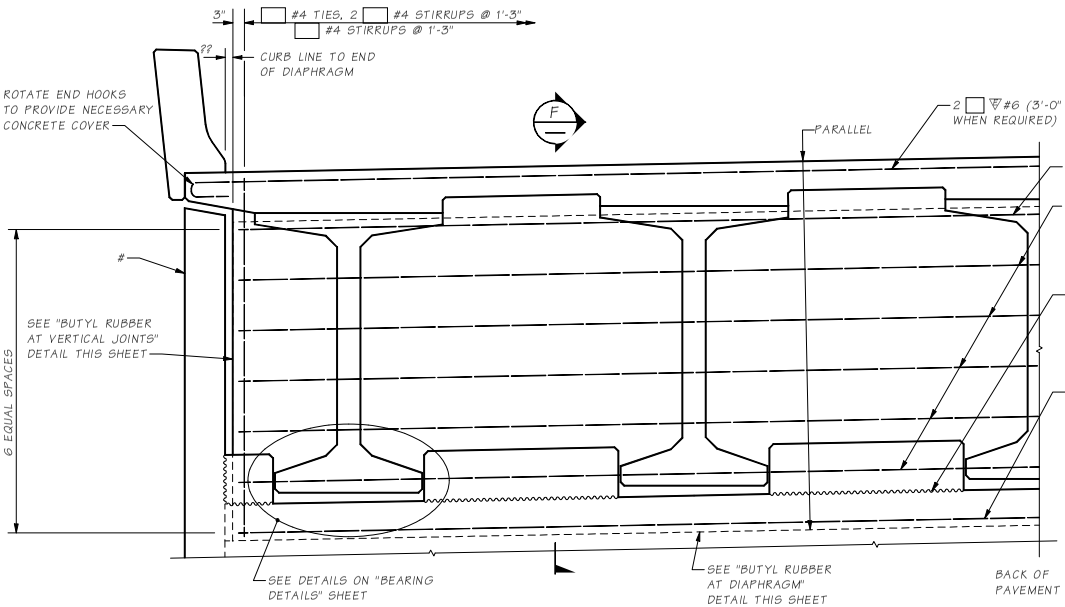

TEMPORARY STRAND CUTTING SEQUENCE

1. ERECT AND BRACE GIRDERS.
2. REMOVE EXPANDED POLYSTYRENE IN 2" x 2" RECESSES IN TOP FLANGE OF GIRDERS.
3. CUT STRAND AND PLASTIC SLEEVE IN 2" x 2" RECESS.
4. REMOVE ALL MOISTURE IN RECESS PRIOR TO FILLING RECESS WITH GROUT.
5. CAST INTERMEDIATE & END DIAPHRAGMS.

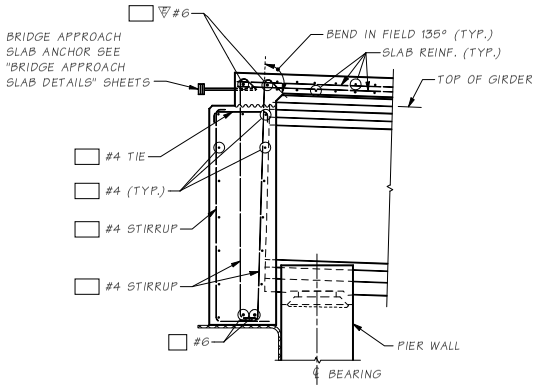

SECTION F

\# If ground line is less than 2'-0" minimum below the bottom of girder at front face of abutment a curtain wall shall be provided.

ELEVATION END DIAPHRAGM

DIMENSIONS ARE ALONG DIAPHRAGM

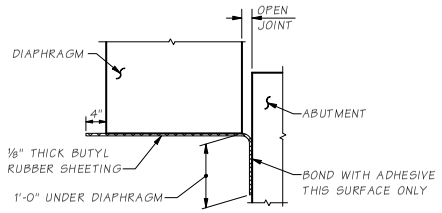

ELEVATION BUTYL RUBBER AT DIAPHRAGM

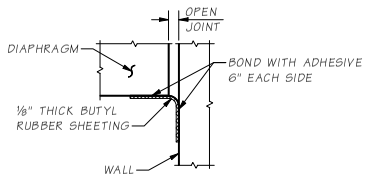

PLAN BUTYL RUBBER AT VERTICAL JOINTS

Bridge length	Open Joint
L ≤ 200'	** = 1.5"
200' < L ≤ 300'	** = 2.0"
300' < L ≤ 400'	** = 2.5"
L > 400'	Special design

* Revise based on size of Open Joint

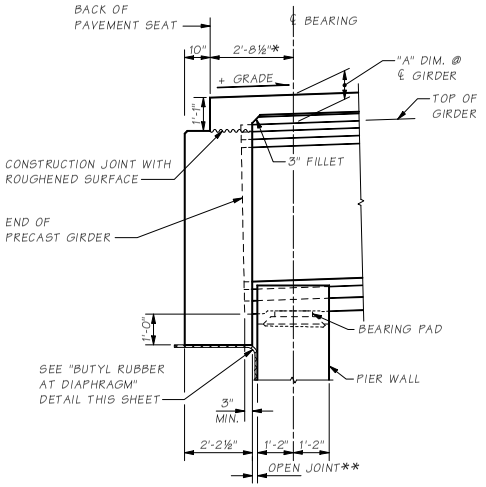

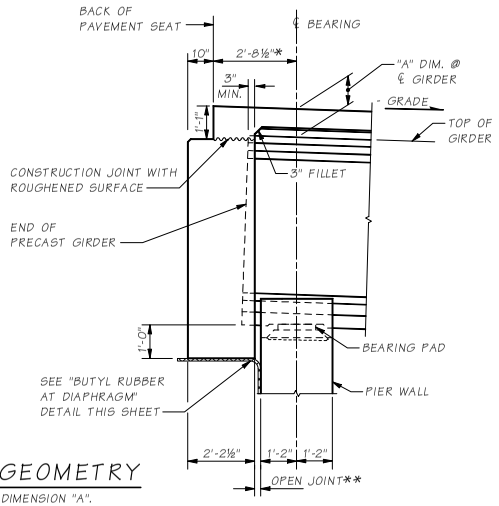

END DIAPHRAGM GEOMETRY

SEE "GIRDER DETAILS" SHEET FOR DIMENSION "A". ALL LONGITUDINAL DIMENSIONS ARE NORMAL TO SKEW.

NOTE:
GIRDERS SHALL BE HELD RIGIDLY IN PLACE WHEN DIAPHRAGMS ARE PLACED.

Bridge Design Engr.	M:\STANDARDS\Girders\WF 1-Girders\WF74G\WF74G_END_DIA_ON_GIR.MAN								
Supervisor					REGION NO.	STATE	FED. AID PROJ. NO.	SHEET NO.	TOTAL SHEETS
Designed By					10	WASH.			
Checked By					JOB NUMBER				
Detailed By									
Bridge Projects Engr.									
Prelim. Plan By									
Architect/Specialist	DATE	REVISION	BY	APP'D					

BRIDGE AND STRUCTURES OFFICE

Washington State Department of Transportation

STANDARD PRESTRESSED CONCRETE GIRDERS

WF74G END DIAPHRAGM ON GIRDER DETAILS

BRIDGE SHEET NO.

SHEET OF SHEETS

SR JOB NO. SHEET 5.6-A10-3

Fri Feb 01 13:54:40 2008

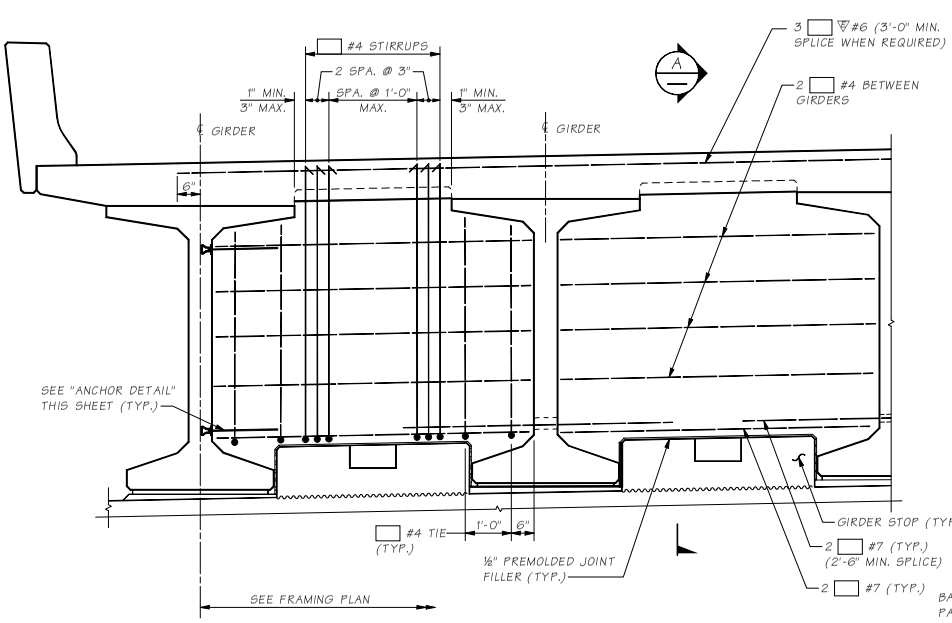

ELEVATION END DIAPHRAGM

DIMENSIONS ARE ALONG DIAPHRAGM

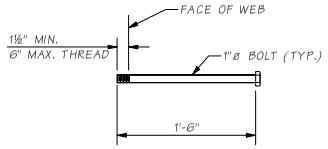

ANCHOR DETAIL

ASTM A-307

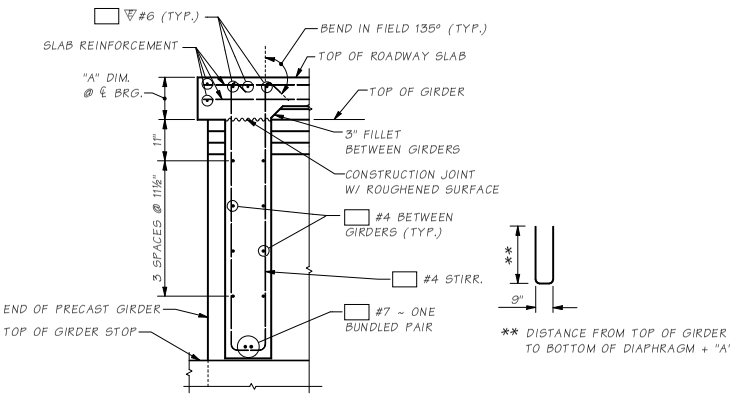

SECTION A

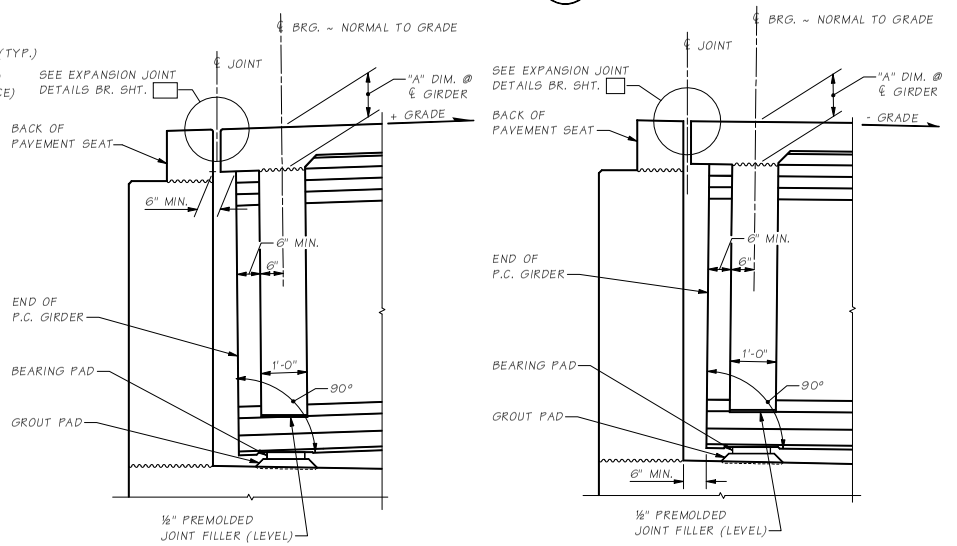

ROADWAY EXPANSION JOINT AT END PIERS

LONGITUDINAL DIMENSIONS ARE NORMAL TO SKEW.
GIRDER STOP NOT SHOWN FOR CLARITY.

TEMPORARY STRAND CUTTING SEQUENCE

1. ERECT AND BRACE GIRDERS.
2. REMOVE EXPANDED POLYSTYRENE IN 2" x 2" RECESSES IN TOP FLANGE OF GIRDERS.
3. CUT STRAND AND PLASTIC SLEEVE IN 2" x 2" RECESS.
4. REMOVE ALL MOISTURE IN RECESS PRIOR TO FILLING RECESS WITH GROUT.
5. CAST INTERMEDIATE & END DIAPHRAGMS.

NOTE:

GIRDERS SHALL BE HELD RIGIDLY IN PLACE WHEN DIAPHRAGMS ARE PLACED. REINFORCING BAR SHALL BE THREADED THROUGH HOLES IN GIRDERS PRIOR TO PLACING OF EXTERIOR GIRDERS. SEE "GIRDER DETAILS" SHEET FOR DIMENSION "A".

Bridge Design Engr.	M:\STANDARDS\Girders\WF I-Girders\WF74G\WF74G_ABUT_PIER_DIAPH_DET.MAN				REGION NO.	STATE	FED. AID PROJ. NO.	SHEET NO.	TOTAL SHEETS	BRIDGE AND STRUCTURES OFFICE
Supervisor					10	WASH.				Washington State Department of Transportation
Designed By					JOB NUMBER					STANDARD PRESTRESSED CONCRETE GIRDERS
Checked By										WF74G ABUTMENT TYPE PIER DIAPHRAGM DETAILS
Detailed By										BRIDGE SHEET NO. / SHEET / OF / SHEETS
Bridge Projects Engr.										
Prelim. Plan By										
Architect/Specialist	DATE	REVISION	BY	APP'D						

SR ____ JOB NO. ____ SHEET ____

5.6-A10-4

Fri Feb 01 13:54:48 2008

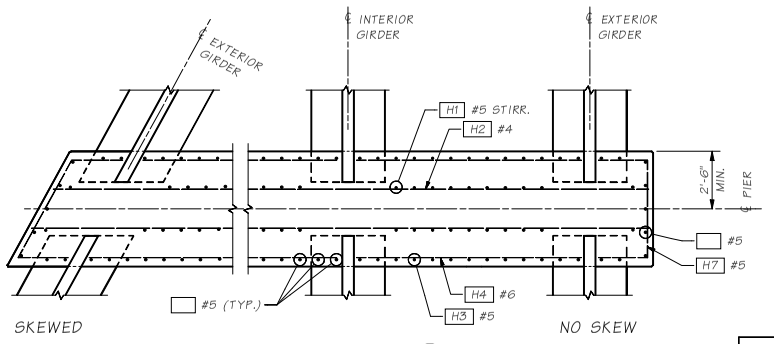

SECTION B

ELEVATION AT TOP OF OAK BLOCK

GIRDER	PIER ?	
	BACK STATION	AHEAD STATION

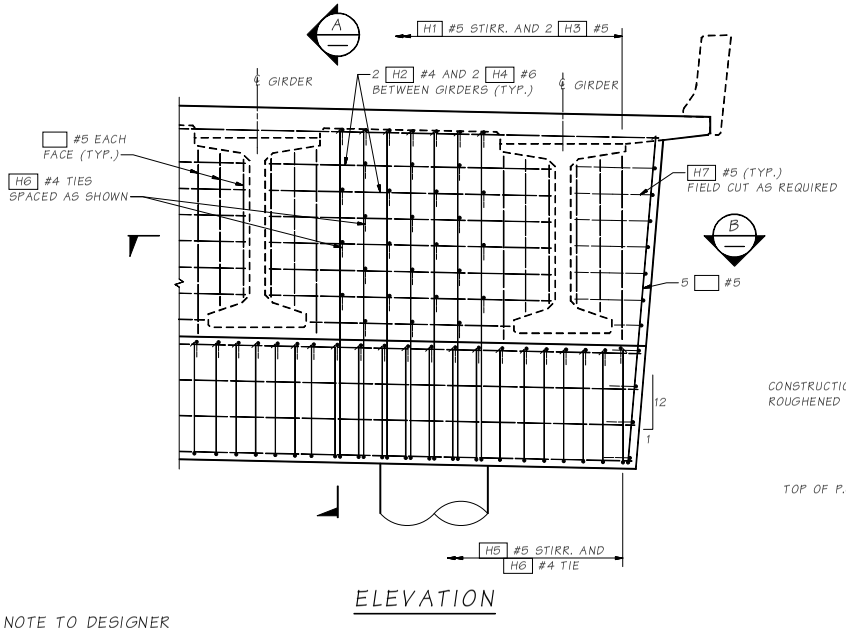

ELEVATION

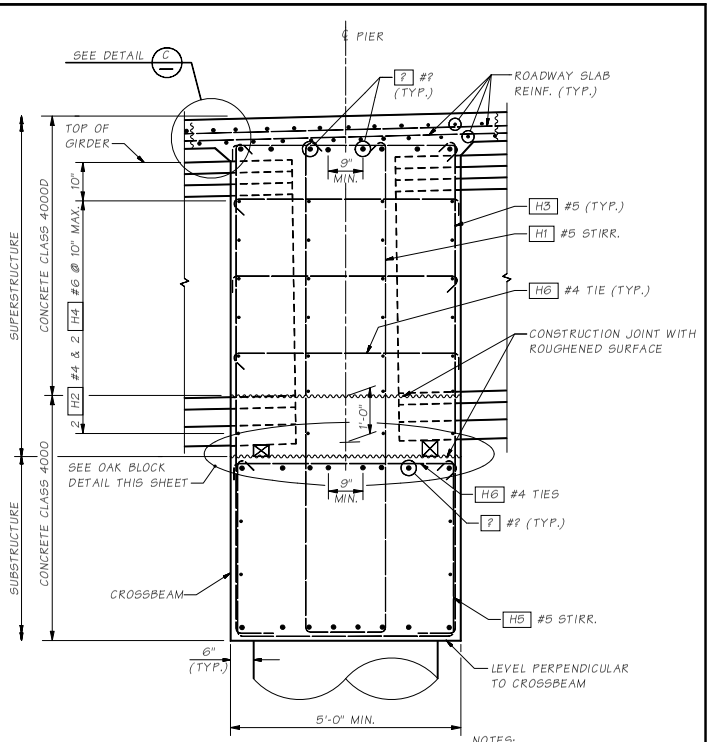

SECTION A

NOTES:
1. LONGITUDINAL DIMENSIONS ARE NORMAL TO SKEW.
2. FOR CONCRETE PLACEMENT PROCEDURE SEE "SUPERSTRUCTURE CONSTRUCTION SEQEUNCE" SHEET.

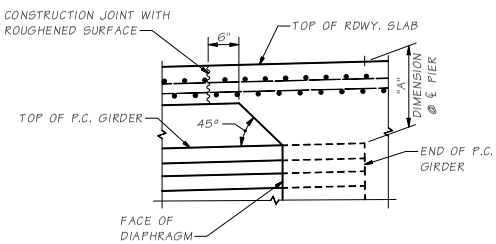

DETAIL C

DIAPHRAGM REINFORCING NOT SHOWN FOR CLARITY

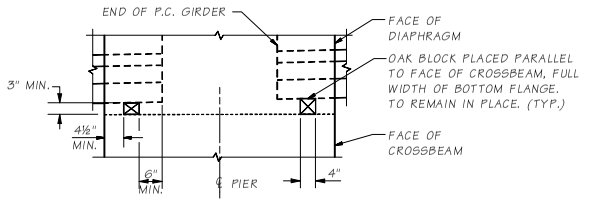

OAK BLOCK DETAIL

LONGITUDINAL DIMENSIONS ARE NORMAL TO SKEW

NOTE TO DESIGNER

The actual bar size and spacing shall be determined by the designer.

Bridge Design Engr.	M:\STANDARDS\Girders\WF 1-Girders\WF74G\WF74G_FIX_FLUSH_FACE_INTER_PIER_DIAPH_DET.MAN								
Supervisor					REGION NO.	STATE	FED. AID PROJ. NO.	SHEET NO.	TOTAL SHEETS
Designed By					10	WASH.			
Checked By					JOB NUMBER				
Detailed By									
Bridge Projects Engr.									
Prelim. Plan By									
Architect/Specialist	DATE	REVISION	BY	APP'D					

BRIDGE AND STRUCTURES OFFICE

Washington State Department of Transportation

STANDARD PRESTRESSED CONCRETE GIRDERS

WF74G FIXED FLUSH-FACE DIAPHRAGM AT INTERMEDIATE PIER DETAILS

BRIDGE SHEET NO.

SHEET OF SHEETS

SR JOB NO. SHEET 5.6-A10-5

Fri Feb 01 13:54:55 2008

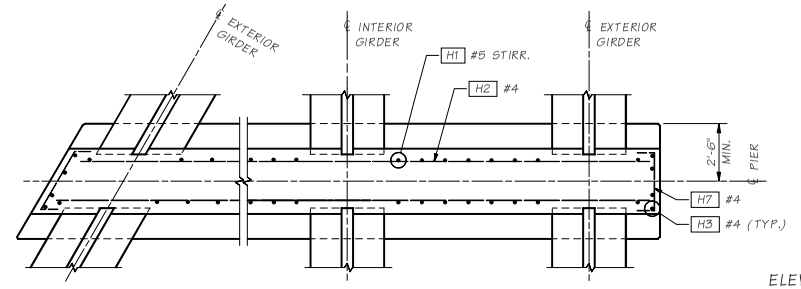

SECTION B

ELEVATION AT TOP OF OAK BLOCK

GIRDER	PIER ?	
	BACK STATION	AHEAD STATION

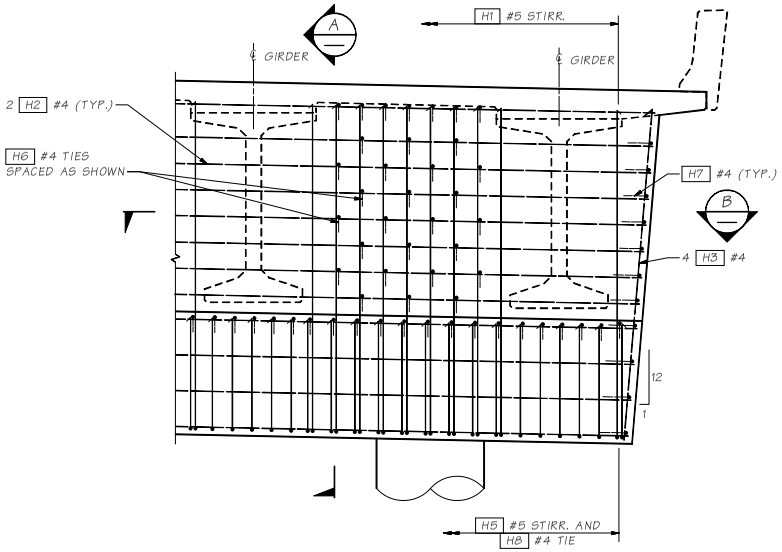

ELEVATION

NOTE TO DESIGNER

The actual bar size and spacing shall be determined by the designer.

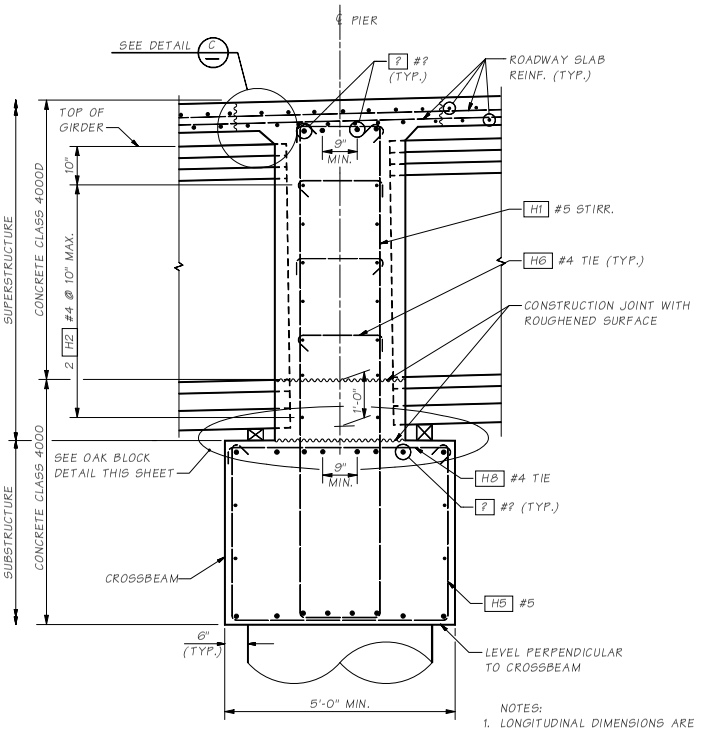

SECTION A

NOTES:
1. LONGITUDINAL DIMENSIONS ARE NORMAL TO SKEW.
2. FOR CONCRETE PLACEMENT PROCEDURE SEE "SUPERSTRUCTURE CONSTRUCTION SEQEUNCE" SHEET.

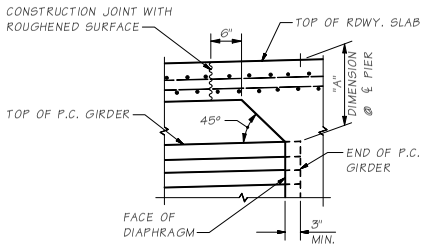

DETAIL C

DIAPHRAGM REINFORCING NOT SHOWN FOR CLARITY

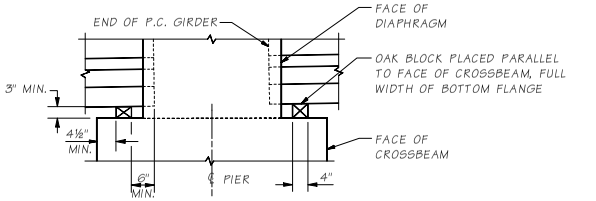

OAK BLOCK DETAIL

LONGITUDINAL DIMENSIONS ARE NORMAL TO SKEW

Bridge Design Engr.	M:\STANDARDS\Girders\WF I-Girders\WF74GWF74G_FIX_RECESSED_FACE_INTER_PIER_DIAPH_DET.MAN				REGION NO.	STATE	FED. AID PROJ. NO.	SHEET NO.	TOTAL SHEETS	BRIDGE AND STRUCTURES OFFICE
Supervisor					10	WASH				Washington State Department of Transportation
Designed By					JOB NUMBER					STANDARD PRESTRESSED CONCRETE GIRDERS
Checked By										WF74G FIXED RECESSED-FACE DIAPHRAGM AT INTERMEDIATE PIER DETAILS
Detailed By										BRIDGE SHEET NO. / SHEET / OF / SHEETS
Bridge Projects Engr.										
Prelim Plan By										
Architect/Specialist	DATE	REVISION	BY	APP'D						

Fri Feb 01 13:55:02 2008

SR JOB NO. SHEET 5.6-A10-6

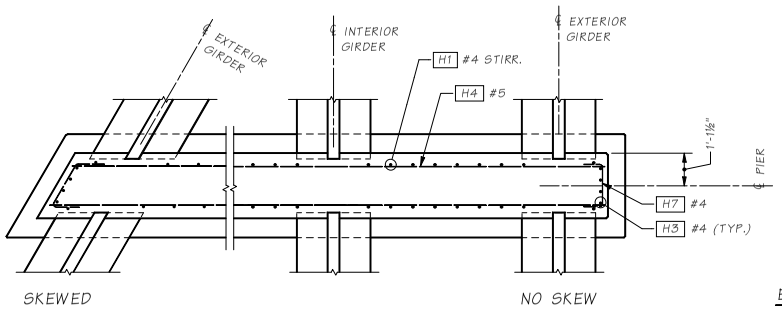

SECTION B

ELEVATION AT TOP OF OAK BLOCK

GIRDER	PIER ?	
	BACK STATION	AHEAD STATION

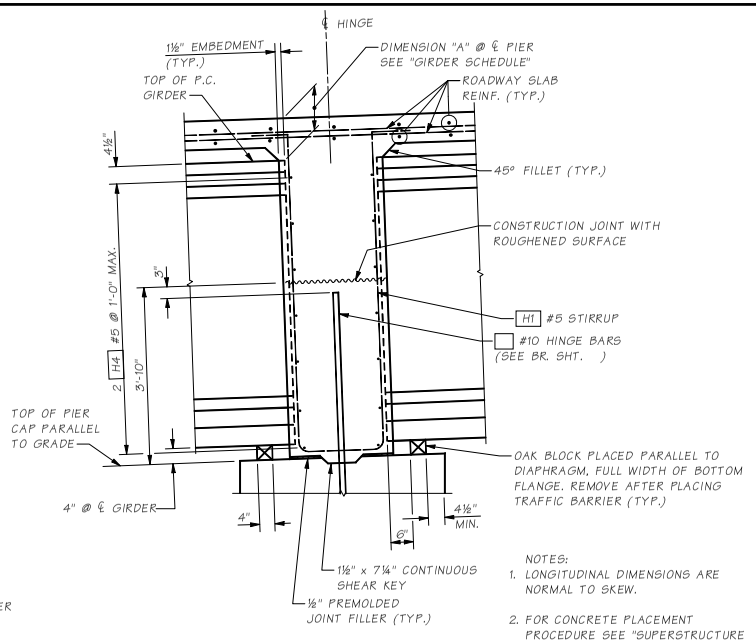

SECTION A

NOTES:
1. LONGITUDINAL DIMENSIONS ARE NORMAL TO SKEW.
2. FOR CONCRETE PLACEMENT PROCEDURE SEE "SUPERSTRUCTURE CONSTRUCTION SEQEUNCE" SHEET.
3. EXTENDED STRANDS AND GIRDER REINFORCING NOT SHOWN FOR CLARITY.

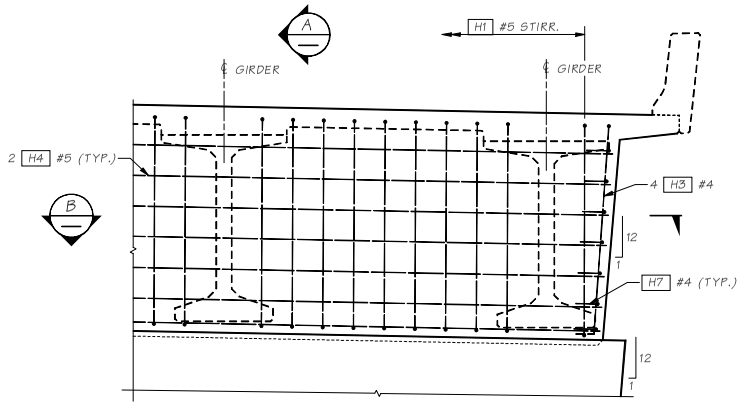

ELEVATION

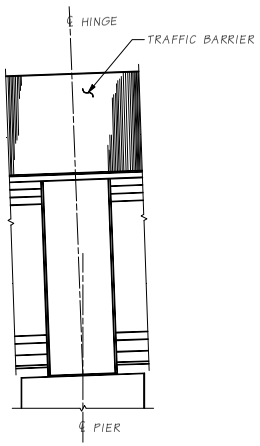

END VIEW
HINGE DIAPHRAGM

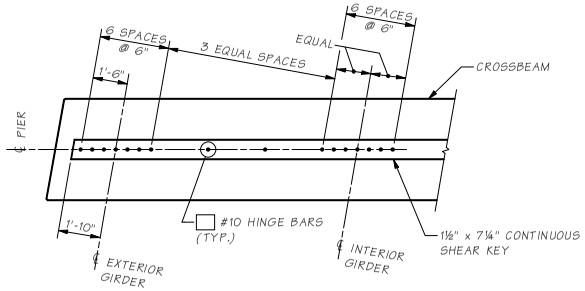

HINGE BAR PLAN

Hinge bar plan is shown for designer. The actual hinge bars detail shall be shown on the crossbeam details sheet.

Bridge Design Engr.	M:\STANDARDS\Girders\WF I-Girders\WF74G\WF74G_HINGE_DIAPHRAGM_INTER_PIER_DET.MAN				REGION NO.	STATE	FED. AID PROJ. NO.	SHEET NO.	TOTAL SHEETS
Supervisor					10	WASH.			
Designed By					JOB NUMBER				
Checked By									
Detailed By									
Bridge Projects Engr.									
Prelim. Plan By									
Architect/Specialist	DATE	REVISION	BY	APP'D					

BRIDGE AND STRUCTURES OFFICE

Washington State Department of Transportation

STANDARD PRESTRESSED CONCRETE GIRDERS

WF74G HINGE DIAPHRAGM AT INTERMEDIATE PIER DETAILS

BRIDGE SHEET NO.

SHEET OF SHEETS

SR JOB NO. SHEET 5.6-A10-7

Fri Feb 01 13:55:09 2008

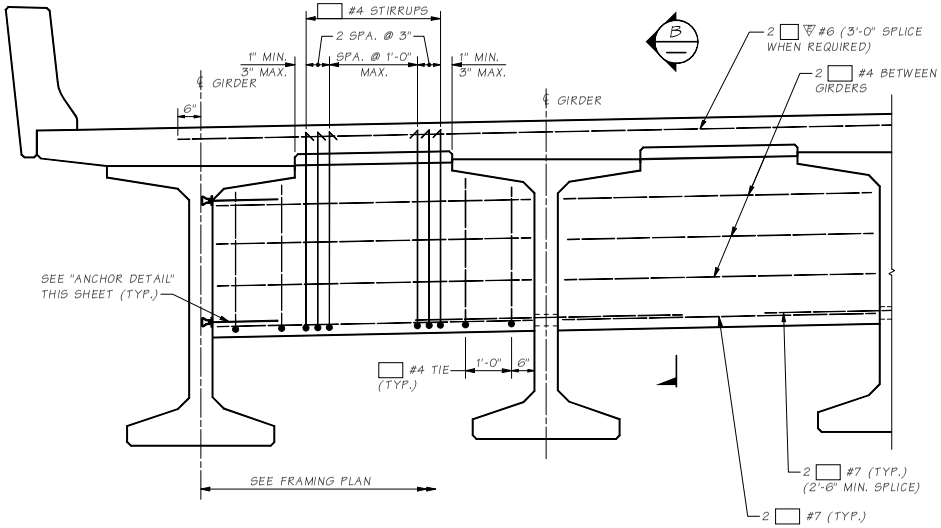

ELEVATION
INTERMEDIATE DIAPHRAGM

DIMENSIONS ARE ALONG DIAPHRAGM

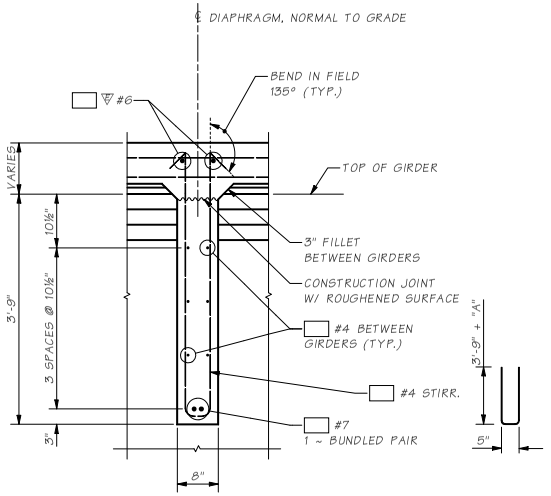

SECTION B

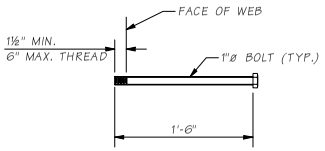

ANCHOR DETAIL

ASTM A-307

NOTE:

GIRDERS SHALL BE HELD RIGIDLY IN PLACE WHEN DIAPHRAGMS ARE PLACED. REINFORCING BAR SHALL BE THREADED THROUGH HOLES IN GIRDERS PRIOR TO PLACING OF EXTERIOR GIRDERS. SEE "GIRDER DETAILS" SHEET FOR DIMENSION "A".

Bridge Design Engr: Jerome A. Weigel	M:\STANDARDS\Girders\WF I-Girders\WF74G\WF74G_INTER_DIAPHRAGM_DET.MAN				REGION NO.	STATE	FED. AID PROJ. NO.	SHEET NO.	TOTAL SHEETS
Supervisor Allen, TM					10	WASH			
Designed By					JOB NUMBER				
Checked By									
Detailed By									
Bridge Projects Engr.									
Prelim. Plan By									
Architect/Specialist	DATE	REVISION	BY	APP'D					

BRIDGE AND STRUCTURES OFFICE

Washington State Department of Transportation

STANDARD PRESTRESSED CONCRETE GIRDERS

WF74G INTERMEDIATE DIAPHRAGM DETAILS

BRIDGE SHEET NO. | SHEET | OF | SHEETS

SHEET | JOB NO. | SR

5.6-A10-8

Fri Feb 01 13:55:19 2008

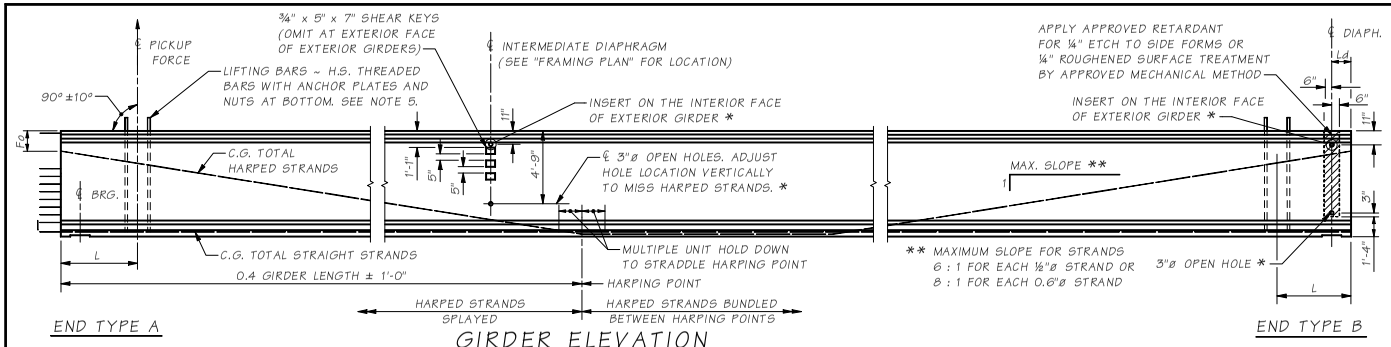

GIRDER ELEVATION

* OMIT HOLES AND PLACE INSERTS ON THE INTERIOR FACE OF EXTERIOR GIRDERS. PLACE HOLES AND INSERTS PARALLEL TO SKEW. INSERTS SHALL BE 1"ø BURKE HI-TENSILE, LANCASTER MALLEABLE, DAYTON-SUPERIOR F-62 FLARED THIN SLAB (1" x 4⅜") FERRULE INSERT OR APPROVED EQUAL. (TYP.)

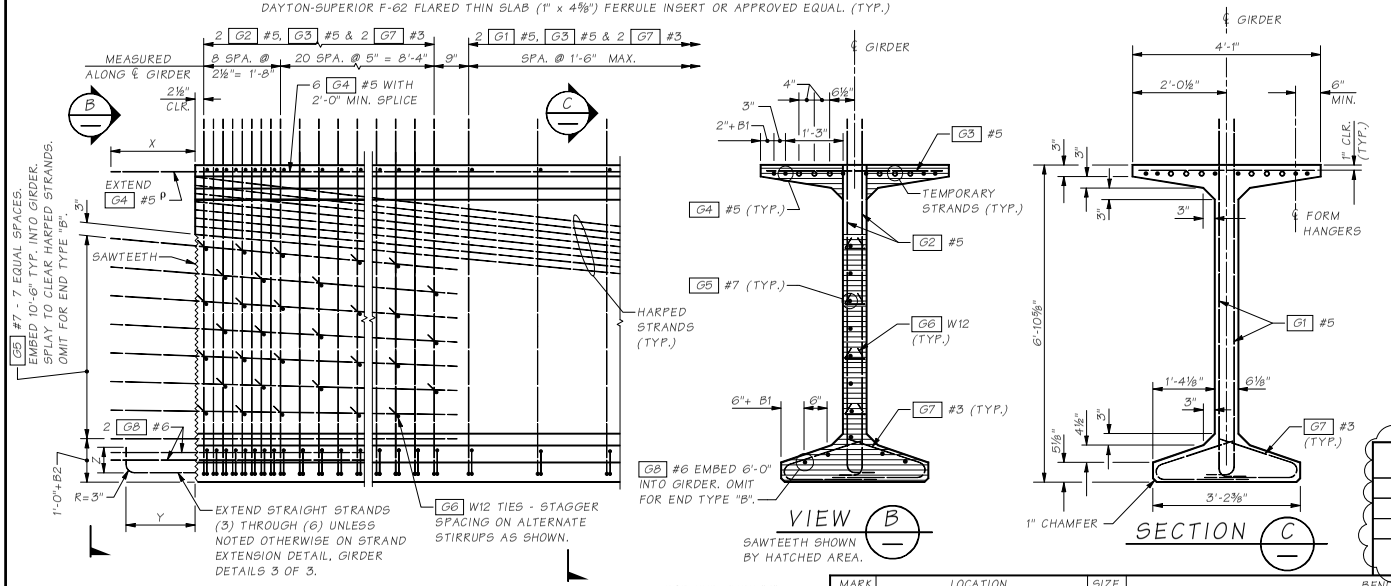

TYPICAL END ELEVATION

END TYPE C SHOWN, OTHER END TYPES SIMILAR.

ρ FIELD BENDING REQUIRED TO OBTAIN 1½" CONCRETE COVER AT PAVEMENT SEAT.

(stirrup spacing shall be determined by the designer)

NOTES

1. PLAN LENGTH SHALL BE INCREASED AS NECESSARY TO COMPENSATE FOR SHORTENING DUE TO PRESTRESS AND SHRINKAGE.
2. ALL PRETENSIONED AND TEMPORARY STRANDS SHALL BE [½"ø OR 0.6"ø] LOW RELAXATION STRANDS (AASHTO M203 GRADE 270.)
3. FOR END TYPES A, C AND D CUT ALL STRANDS FLUSH WITH THE GIRDER ENDS AND PAINT WITH AN APPROVED EPOXY RESIN, EXCEPT FOR EXTENDED STRANDS AS SHOWN. FOR END TYPE B CUT ALL STRANDS 1" BELOW CONCRETE SURFACE AND GROUT WITH AN APPROVED EPOXY GROUT.
4. THE TOP SURFACE OF THE GIRDER FLANGE SHALL BE ROUGHENED IN ACCORDANCE WITH SECTION 6-02.3(25)H OF THE STANDARD SPECIFICATIONS.
5. LIFTING EMBEDMENTS SHALL BE INSTALLED IN ACCORDANCE WITH SECTION 6-02.3(25)L OF THE STANDARD SPECIFICATIONS.
6. CAUTION SHALL BE EXERCISED IN HANDLING AND PLACING GIRDERS. ALL GIRDERS SHALL BE CHECKED BY THE CONTRACTOR TO ENSURE THAT THEY ARE BRACED ADEQUATELY TO PREVENT TIPPING AND TO CONTROL LATERAL BENDING DURING SHIPPING. ONCE ERECTED, ALL GIRDERS SHALL BE BRACED LATERALLY TO PREVENT TIPPING UNTIL THE DIAPHRAGMS ARE CAST AND CURED.
7. FORMS FOR BEARING PAD RECESSES SHALL BE CONSTRUCTED AND FASTENED IN SUCH A MANNER AS TO NOT CAUSE DAMAGE TO THE GIRDER DURING THE STRAND RELEASE OPERATION.
8. TEMPORARY STRANDS SHALL BE EITHER PRETENSIONED OR POST-TENSIONED IN ACCORDANCE WITH SECTION 6-02.3(25)L OF THE STANDARD SPECIFICATIONS. IF PRETENSIONED, THESE TEMPORARY STRANDS SHALL BE UNBONDED OVER ALL BUT THE END 10'-0" OF THE GIRDER LENGTH. AS AN ALTERNATE, TEMPORARY STRANDS MAY BE POST-TENSIONED ON THE SAME DAY THE PRETENSIONING IS RELEASED INTO THE GIRDER.

INTERMEDIATE DIAPHRAGM:
1/5 points of span for span lengths greater than 160'-0"
1/4 points of span for span lengths 120'-0" to 160'-0"
1/3 points of span for span lengths 80'-0" to 120'-0"
1/2 points of span for span lengths less than 80'-0".

Diaphragm Type	END TYPE	BEARING RECESS	X	Y	Z	SAWTEETH
End Diaph. on Girder	A	YES	1'-10"	1'-6"	9"	YES
"L" Abutment	B	YES	0"	0"	0"	NO
Hinge Diaph. on Interm. Pier	C	NO	1'-10"	1'-6"	9"	YES
Fixed Diaph. @ Interm. Pier	D	NO	1'-10"	ALT. 1 OR ALT. 2 STRAND EXTENSION		YES

FOR END TYPE "C"

ENDS AHEAD ON STATION
G5 BARS LEFT OF ℄
B1 = 0" (G4 , G8)
B2 = 0" (G5)

ENDS BACK ON STATION
G5 BARS RIGHT OF ℄
B1 = 1½"(G4 , G8)
B2 = 3" (G5)

MARK	LOCATION	SIZE	
G1	GIRDER STIRRUPS	5	
G2	GIRDER END STIRRUPS	5	
G3	GIRDER TOP FLANGE	5	STR.
G4	GIRDER LONGIT. FULL LENGTH	5	STR.
G5	GIRDER END LONGIT.	7	STR.
G6	GIRDER END TIES	W12 δ	
G7β	GIRDER BOT. FLANGE TIES	3	
G8	GIRDER END LONGIT.	6	STR.
G9β	GIRDER BOT. FLANGE TIES	3	
G10β	GIRDER BOT. FLANGE TIES	3	

BENDING DIAGRAM (ALL DIMENSIONS ARE OUT TO OUT)
NOTE: FOR DIMENSION "A", SEE "GIRDER SCHEDULE"

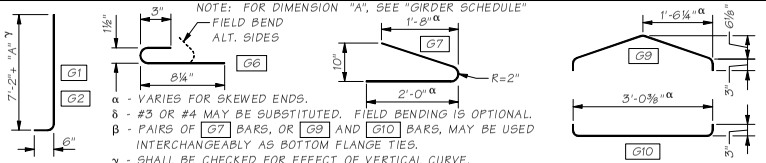

α - VARIES FOR SKEWED ENDS.
δ - #3 OR #4 MAY BE SUBSTITUTED. FIELD BENDING IS OPTIONAL.
β - PAIRS OF G7 BARS, OR G9 AND G10 BARS, MAY BE USED INTERCHANGEABLY AS BOTTOM FLANGE TIES.
γ - SHALL BE CHECKED FOR EFFECT OF VERTICAL CURVE.

Bridge Design Engr.	M:\STANDARDS\Girders\WF I-Girders\WF83G\WF83G1.man							
Supervisor				REGION NO.	STATE	FED. AID PROJ. NO.	SHEET NO.	TOTAL SHEETS
Designed By				10	WASH.			
Checked By				JOB NUMBER				
Detailed By								
Bridge Projects Engr.								
Prelim Plan By								
Architect/Specialist	DATE	REVISION	BY	APP'D				

BRIDGE AND STRUCTURES OFFICE

Washington State Department of Transportation

STANDARD PRESTRESSED CONCRETE GIRDERS

WF83G GIRDER DETAILS 1 OF 3

BRIDGE SHEET NO. SHEET OF SHEETS

SR JOB NO. SHEET 5.6-A11-1

Fri Feb 01 14:10:42 2008

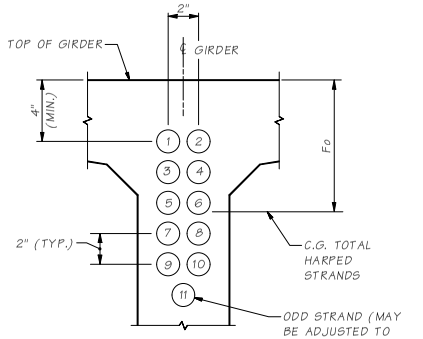

STRAND PATTERN AT GIRDER END

HARPED STRAND LOCATION SEQUENCE SHALL BE AS SHOWN (1), (2) ETC.

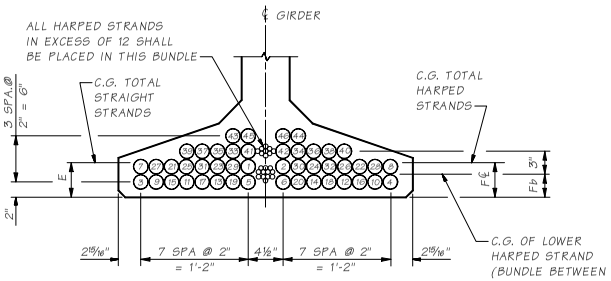

STRAND PATTERN AT ℄ SPAN

STRAIGHT STRAND LOCATION SEQUENCE SHALL BE AS SHOWN (1), (2) ETC.

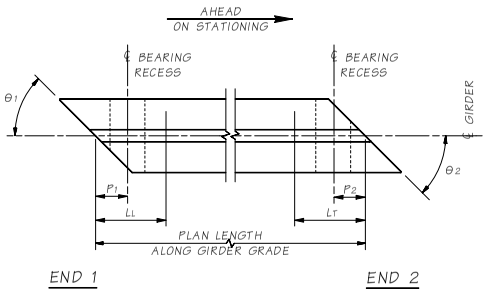

NOTE:
L1 AND Lt ARE SHIPPING SUPPORT LOCATIONS AT LEADING AND TRAILING ENDS, RESPECTIVELY.

GIRDER SCHEDULE

DIMENSION "A" AT ℄ BEARINGS =							BASED ON GIRDER DEFLECTION = "D" AT TIME OF SLAB PLACEMENT (120 DAYS)																			
SPAN	GIRDER	END 1 TYPE	END 2 TYPE	L	L1	Lt	θ1 (DEG.)	θ2 (DEG.)	P1	P2	PLAN LENGTH (ALONG GIRDER GRADE)	MIN. CONC. COMP. STRENGTH @ FINAL F'c (KSI)	MIN. CONC. COMP. STRENGTH @ RELEASE F'ci (KSI)	HARPED NO. OF STRANDS	HARPED JACKING FORCE (KIPS)	STRAIGHT NO. OF STRANDS	STRAIGHT JACKING FORCE (KIPS)	TEMPORARY NO. OF STRANDS	TEMPORARY JACKING FORCE (KIPS)	LOCATION OF C.G. STRANDS E	LOCATION OF C.G. STRANDS F℄	LOCATION OF C.G. STRANDS Fb	LOCATION OF C.G. STRANDS Fo	C	D @ 40 DAYS	D @ 120 DAYS	Ld
"	"	"	"	"	"	"	"	"	"	"	"	"	"	"	"	"	"	"	"	"	"	"	"	"	"	"	"
"	"	"	"	"	"	"	"	"	"	"	"	"	"	"	"	"	"	"	"	"	"	"	"	"	"	"	"

NOTE:
Dimensions shall be shown in imperial units to the nearest 1/8th inch.

The number of harped strands should not exceed ½ of the number of straight strands.

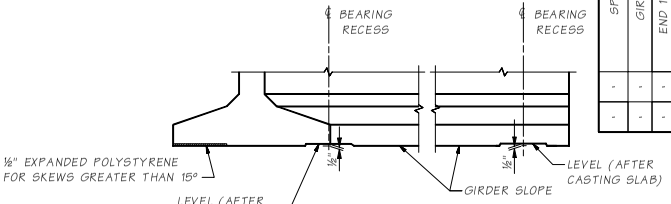

ELEVATION

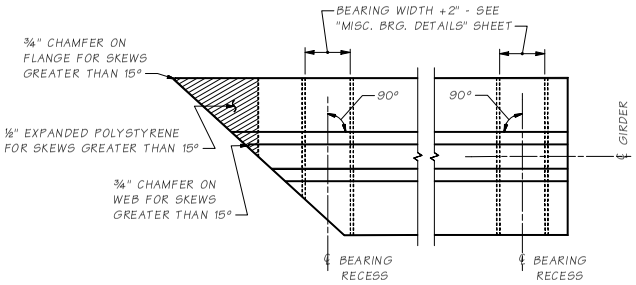

PLAN

BEARING RECESS AND BOTTOM FLANGE SPALL PROTECTION DETAIL

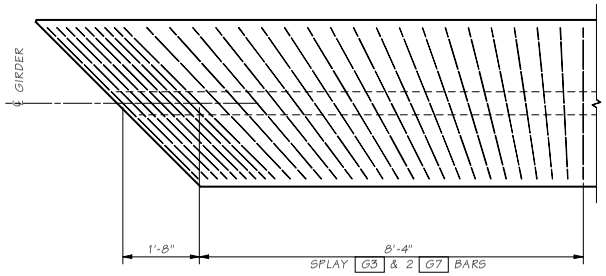

TRANSVERSE REINFORCING SKEWED ENDS

ONLY TRANSVERSE REINF. SHOWN

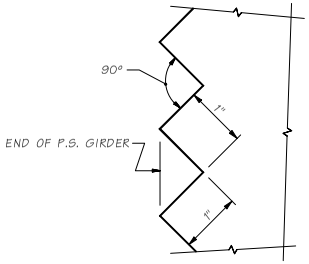

SAWTOOTH DETAILS

SAWTEETH ARE FULL WIDTH - USE SAWTOOTH KEYS FROM BOTTOM OF BOTTOM FLANGE TO BOTTOM OF LOWEST HARPED STRAND AS WELL AS TOP FLANGE ADJACENT TO HARPED STRANDS AS SHOWN IN VIEW B - GIRDER DETAILS 1 OF 3

Bridge Design Engr.	M:\STANDARDS\Girders\WF I-Girders\WF83G\WF83G2.man									
Supervisor										
Designed By										
Checked By										
Detailed By										
Bridge Projects Engr.										
Prelim. Plan By										
Architect/Specialist	DATE	REVISION	BY	APP'D						

REGION NO.	STATE	FED. AID PROJ. NO.	SHEET NO.	TOTAL SHEETS
10	WASH.			
JOB NUMBER				

BRIDGE AND STRUCTURES OFFICE

Washington State Department of Transportation

STANDARD PRESTRESSED CONCRETE GIRDERS

WF83G GIRDER DETAILS 2 OF 3

BRIDGE SHEET NO.

SHEET OF SHEETS

JOB NO. SHEET

SR 5.6-A11-2

Fri Feb 01 14:10:48 2008

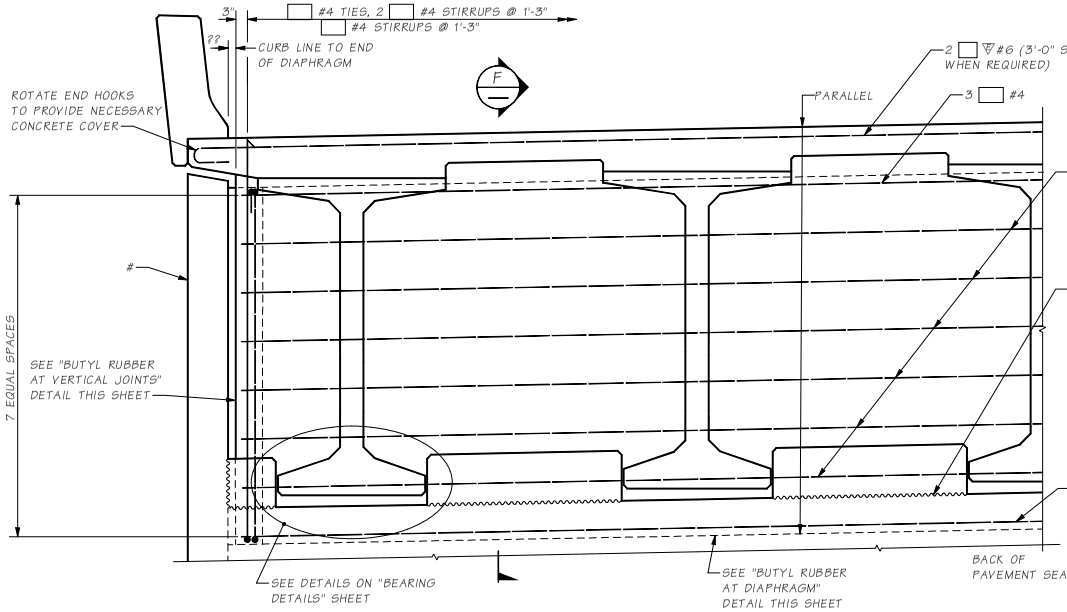

If ground line is less than 2'-0" minimum below the bottom of girder at front face of abutment a curtain wall shall be provided.

ELEVATION END DIAPHRAGM

DIMENSIONS ARE ALONG DIAPHRAGM

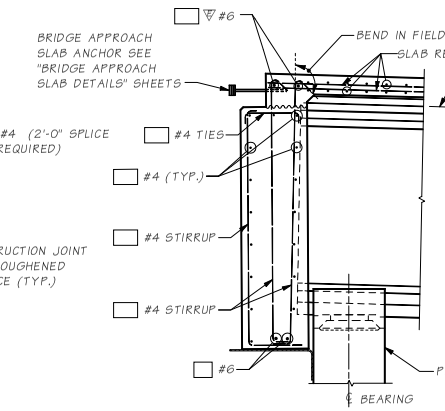

SECTION F

TEMPORARY STRAND CUTTING SEQUENCE

1. ERECT AND BRACE GIRDERS.
2. REMOVE EXPANDED POLYSTYRENE IN 2" x 2" RECESSES IN TOP FLANGE OF GIRDERS.
3. CUT STRAND AND PLASTIC SLEEVE IN 2" x 2" RECESS.
4. REMOVE ALL MOISTURE IN RECESS PRIOR TO FILLING RECESS WITH GROUT.
5. CAST INTERMEDIATE & END DIAPHRAGMS.

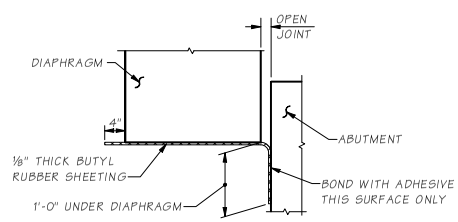

ELEVATION BUTYL RUBBER AT DIAPHRAGM

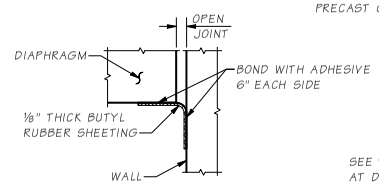

PLAN BUTYL RUBBER AT VERTICAL JOINTS

Bridge length	Open Joint
L ≤ 200'	** = 1.5"
200' < L ≤ 300'	** = 2.0"
300' < L ≤ 400'	** = 2.5"
L > 400'	Special design

* Revise based on size of Open Joint

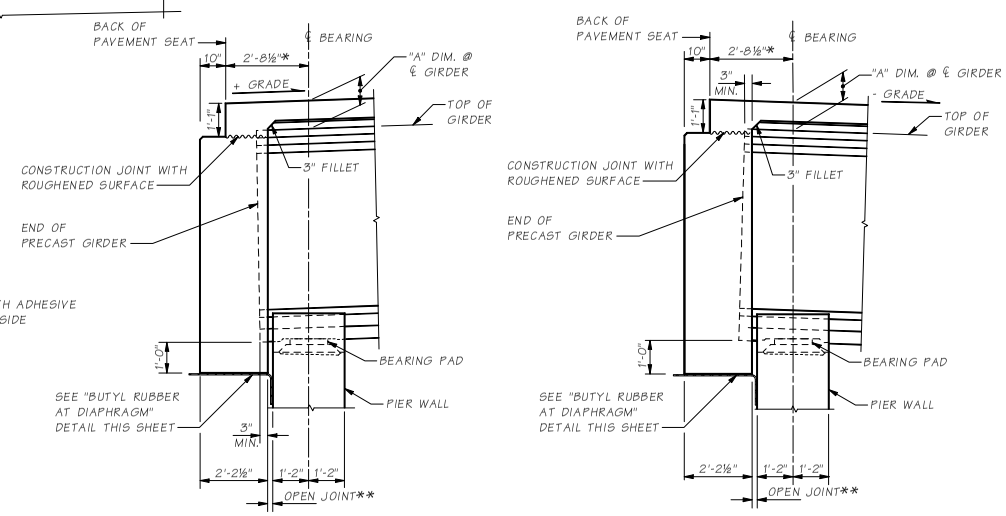

END DIAPHRAGM GEOMETRY

SEE "GIRDER DETAILS" SHEET FOR DIMENSION "A".
ALL LONGITUDINAL DIMENSIONS ARE NORMAL TO SKEW.

NOTE:
GIRDERS SHALL BE HELD RIGIDLY IN PLACE WHEN DIAPHRAGMS ARE PLACED.

Bridge Design Engr.	M:\STANDARDS\Girders\WF I-Girders\WF83G\WF83G_END_DIA_ON_GIR.MAN			
Supervisor				
Designed By				
Checked By				
Detailed By				
Bridge Projects Engr.				
Prelim. Plan By				
Architect/Specialist	DATE	REVISION	BY	APP'D

REGION NO.	STATE	FED. AID PROJ. NO.	SHEET NO.	TOTAL SHEETS
10	WASH.			
JOB NUMBER				

BRIDGE AND STRUCTURES OFFICE

Washington State Department of Transportation

STANDARD PRESTRESSED CONCRETE GIRDERS

WF83G END DIAPHRAGM ON GIRDER DETAILS

BRIDGE SHEET NO.
SHEET OF SHEETS

SR JOB NO. SHEET

5.6-A11-3

Fri Feb 01 14:10:53 2008

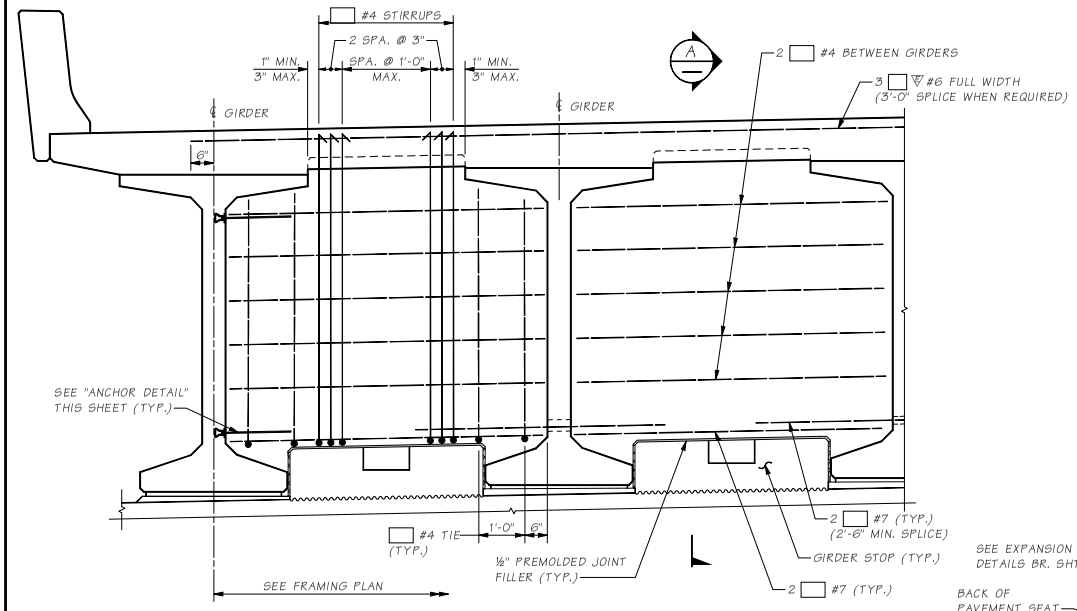

ELEVATION END DIAPHRAGM

DIMENSIONS ARE ALONG DIAPHRAGM

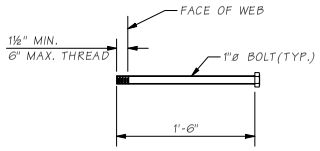

ANCHOR DETAIL

ASTM A-307

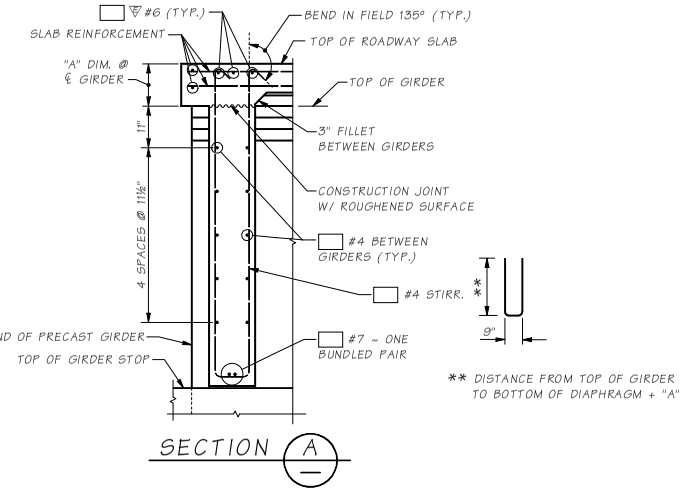

SECTION A

TEMPORARY STRAND CUTTING SEQUENCE

1. ERECT AND BRACE GIRDERS.
2. REMOVE EXPANDED POLYSTYRENE IN 2" x 2" RECESSES IN TOP FLANGE OF GIRDERS.
3. CUT STRAND AND PLASTIC SLEEVE IN 2" x 2" RECESS.
4. REMOVE ALL MOISTURE IN RECESS PRIOR TO FILLING RECESS WITH GROUT.
5. CAST INTERMEDIATE & END DIAPHRAGMS.

NOTE:

GIRDERS SHALL BE HELD RIGIDLY IN PLACE WHEN DIAPHRAGMS ARE PLACED. REINFORCING BAR SHALL BE THREADED THROUGH HOLES IN GIRDERS PRIOR TO PLACING OF EXTERIOR GIRDERS. SEE "GIRDER DETAILS" SHEET FOR DIMENSION "A".

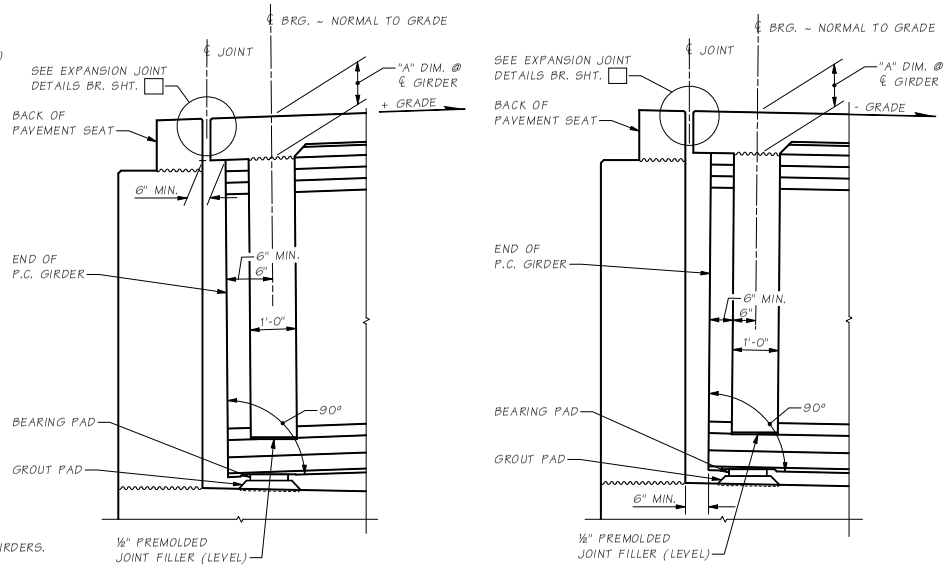

ROADWAY EXPANSION JOINT AT END PIERS

LONGITUDINAL DIMENSIONS ARE NORMAL TO SKEW.
GIRDER STOP NOT SHOWN FOR CLARITY.

Bridge Design Engr.	M:\STANDARDS\Girders\WF I-Girders\WF83G\WF83G_ABUT_PIER_DIAPH_DET.MAN				REGION NO.	STATE	FED. AID PROJ. NO.	SHEET NO.	TOTAL SHEETS
Supervisor					10	WASH.			
Designed By					JOB NUMBER				
Checked By									
Detailed By									
Bridge Projects Engr.									
Prelim. Plan By									
Architect/Specialist	DATE	REVISION	BY	APP'D					

BRIDGE AND STRUCTURES OFFICE

Washington State Department of Transportation

STANDARD PRESTRESSED CONCRETE GIRDERS

WF83G ABUTMENT TYPE PIER DIAPHRAGM DETAILS

BRIDGE SHEET NO. / SHEET / OF / SHEETS

SR / JOB NO. / SHEET

5.6-A11-4

Fri Feb 01 14:10:58 2008

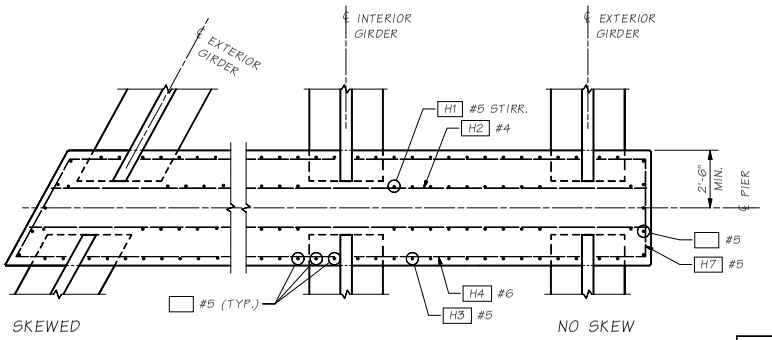

SECTION B

ELEVATION AT TOP OF OAK BLOCK

GIRDER	PIER ?	
	BACK STATION	AHEAD STATION

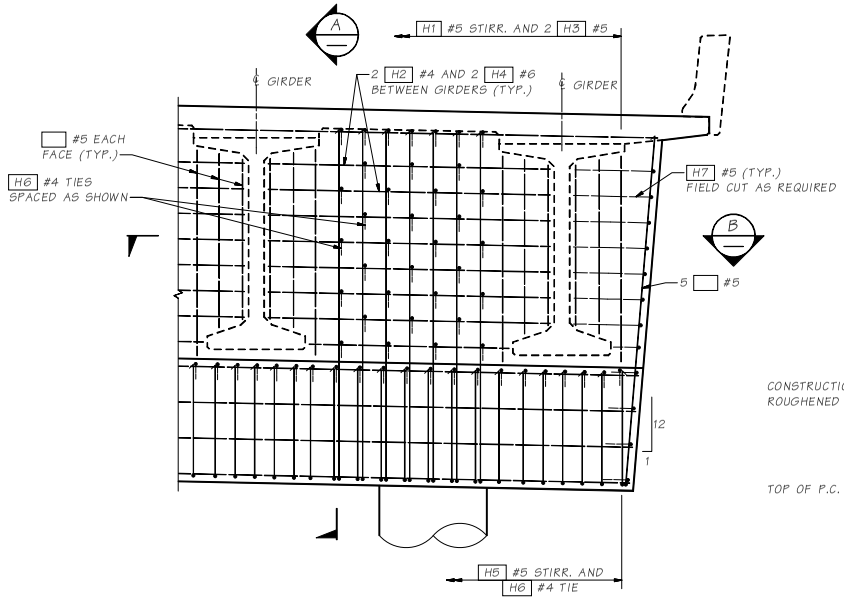

ELEVATION

NOTE TO DESIGNER

The actual bar size and spacing shall be determined by the designer.

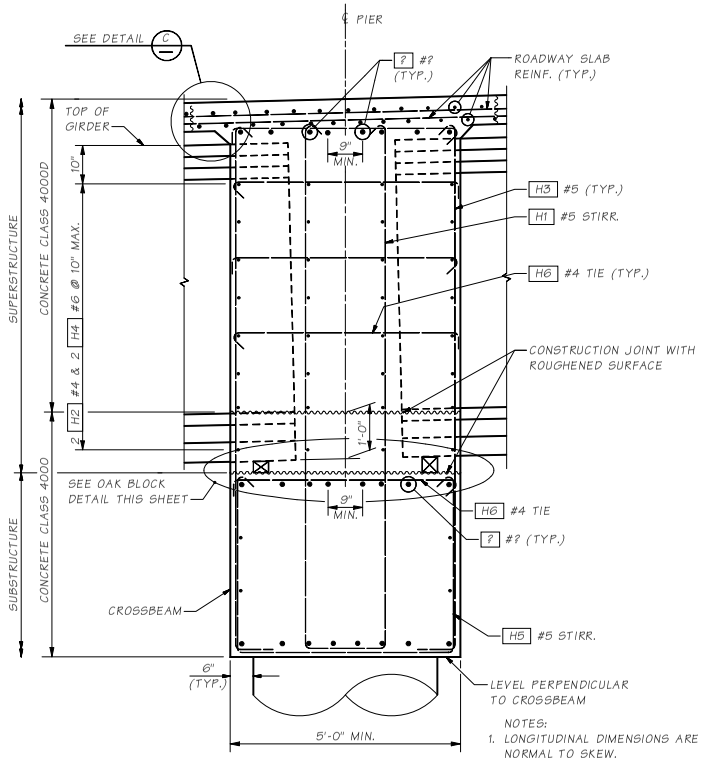

SECTION A

NOTES:
1. LONGITUDINAL DIMENSIONS ARE NORMAL TO SKEW.
2. FOR CONCRETE PLACEMENT PROCEDURE SEE "SUPERSTRUCTURE CONSTRUCTION SEQEUNCE" SHEET.

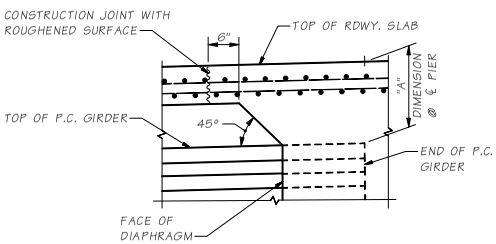

DETAIL C

DIAPHRAGM REINFORCING NOT SHOWN FOR CLARITY

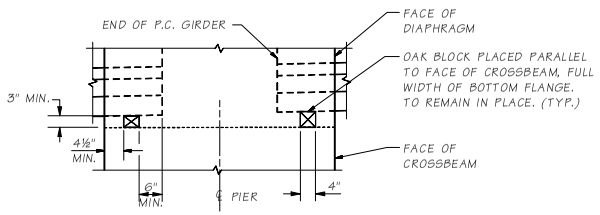

OAK BLOCK DETAIL

LONGITUDINAL DIMENSIONS ARE NORMAL TO SKEW

Bridge Design Engr.	M:\STANDARDS\Girders\WF 1-Girders\WF83G\WF83G_FIX_FLUSH_FACE_INTER_PIER_DIAPH_DET.MAN								
Supervisor					REGION NO.	STATE	FED. AID PROJ. NO.	SHEET NO.	TOTAL SHEETS
Designed By					10	WASH.			
Checked By					JOB NUMBER				
Detailed By									
Bridge Projects Engr.									
Prelim. Plan By									
Architect/Specialist	DATE	REVISION	BY	APP'D					

BRIDGE AND STRUCTURES OFFICE

Washington State Department of Transportation

STANDARD PRESTRESSED CONCRETE GIRDERS

WF83G FIXED FLUSH-FACE DIAPHRAGM AT INTERMEDIATE PIER DETAILS

BRIDGE SHEET NO.

SHEET OF SHEETS

SR JOB NO. SHEET 5.6-A11-5

Fri Feb 01 14:11:05 2008

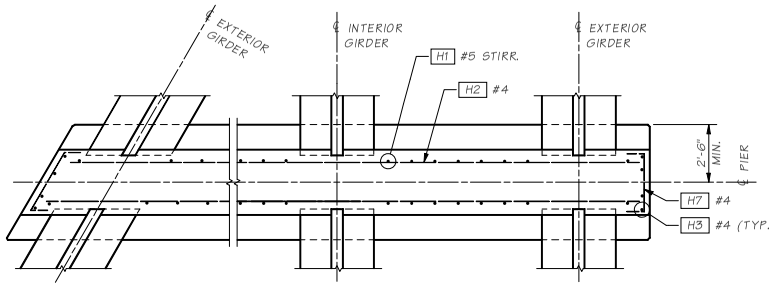

SECTION B

ELEVATION AT TOP OF OAK BLOCK

GIRDER	PIER ?	
	BACK STATION	AHEAD STATION

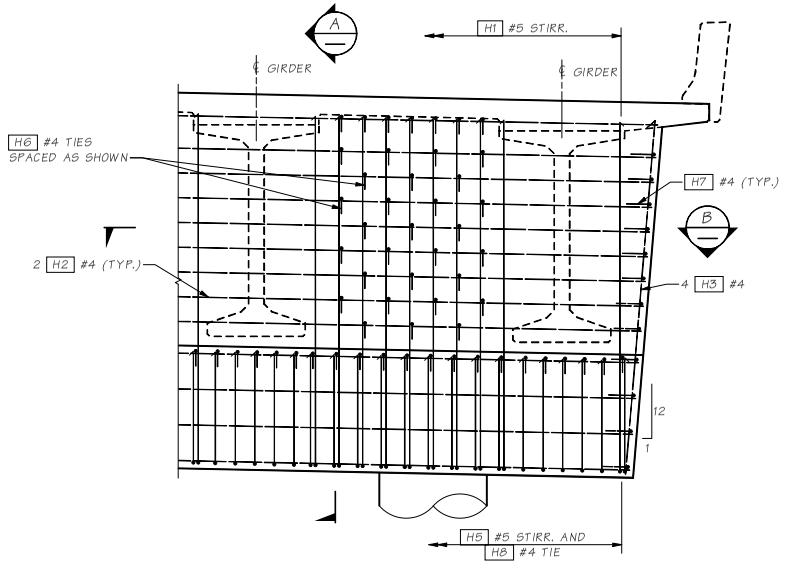

ELEVATION

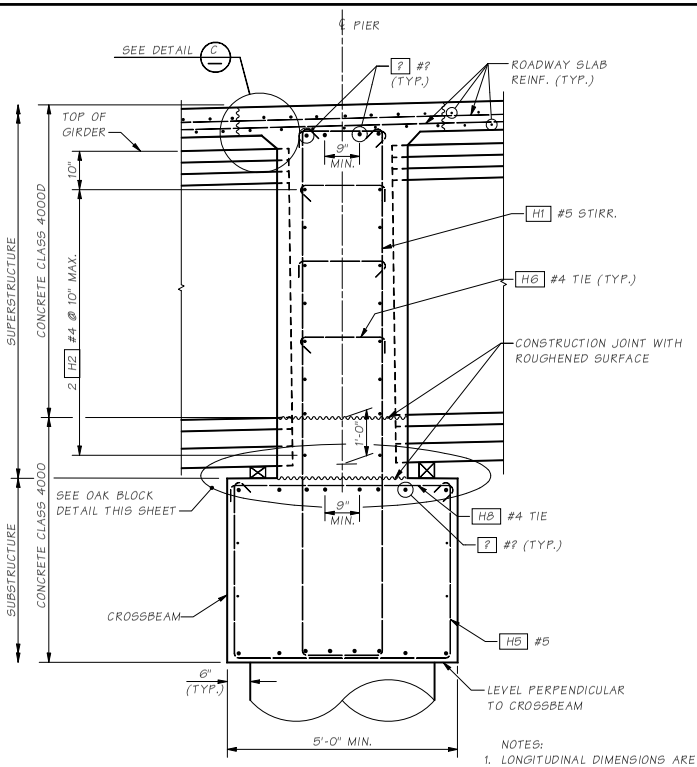

SECTION A

NOTES:
1. LONGITUDINAL DIMENSIONS ARE NORMAL TO SKEW.
2. FOR CONCRETE PLACEMENT PROCEDURE SEE "SUPERSTRUCTURE CONSTRUCTION SEQEUNCE" SHEET.

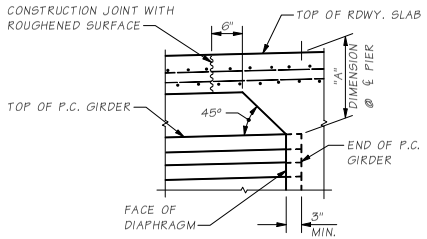

DETAIL C

DIAPHRAGM REINFORCING NOT SHOWN FOR CLARITY

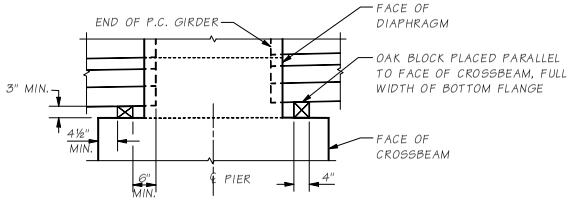

OAK BLOCK DETAIL

LONGITUDINAL DIMENSIONS ARE NORMAL TO SKEW

NOTE TO DESIGNER

The actual bar size and spacing shall be determined by the designer.

Bridge Design Engr.	M:\STANDARDS\Girders\WF 1-Girders\WF83G\WF83G_FIX_RECESSED_FACE_INTER_PIER_DIAPH_DET.MAN								
Supervisor					REGION NO.	STATE	FED. AID PROJ. NO.	SHEET NO.	TOTAL SHEETS
Designed By					10	WASH.			
Checked By					JOB NUMBER				
Detailed By									
Bridge Projects Engr.									
Prelim Plan By									
Architect/Specialist	DATE	REVISION	BY	APP'D					

BRIDGE AND STRUCTURES OFFICE

Washington State Department of Transportation

STANDARD PRESTRESSED CONCRETE GIRDERS

WF83G FIXED RECESSED-FACE DIAPHRAGM AT INTERMEDIATE PIER DETAILS

BRIDGE SHEET NO.

SHEET OF SHEETS

SHEET

JOB NO.

SR 5.6-A11-6

Fri Feb 01 14:11:12 2008

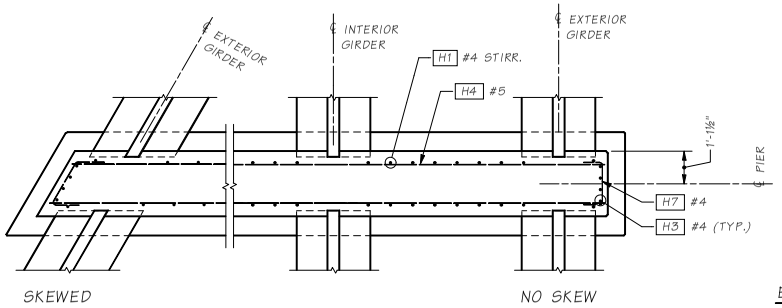

SECTION B

ELEVATION AT TOP OF OAK BLOCK

GIRDER	PIER ?	
	BACK STATION	AHEAD STATION

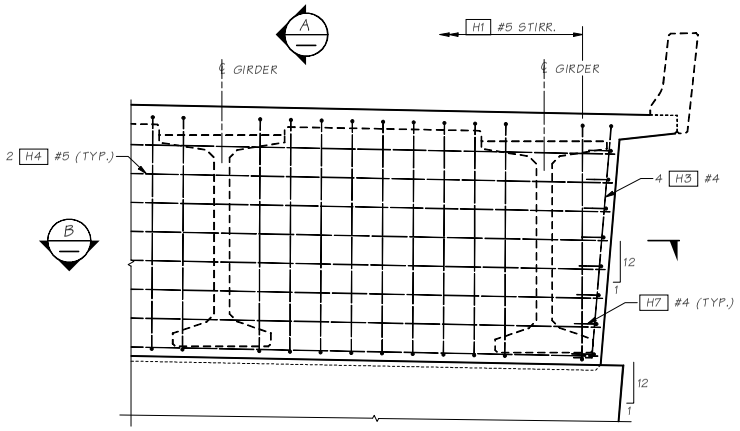

ELEVATION

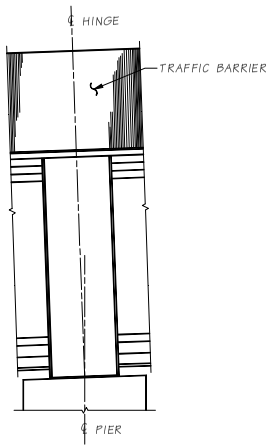

END VIEW
HINGE DIAPHRAGM

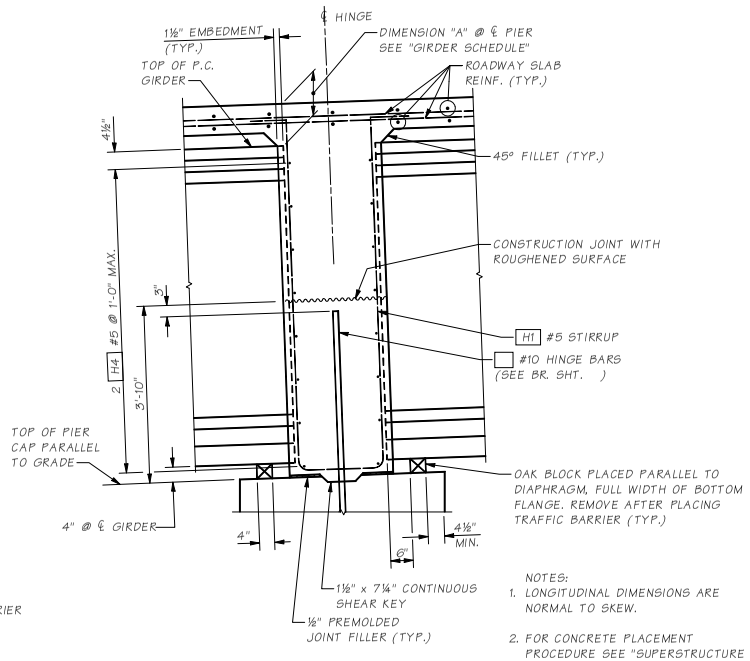

SECTION A

NOTES:
1. LONGITUDINAL DIMENSIONS ARE NORMAL TO SKEW.
2. FOR CONCRETE PLACEMENT PROCEDURE SEE "SUPERSTRUCTURE CONSTRUCTION SEQEUNCE" SHEET.
3. EXTENDED STRANDS AND GIRDER REINFORCING NOT SHOWN FOR CLARITY.

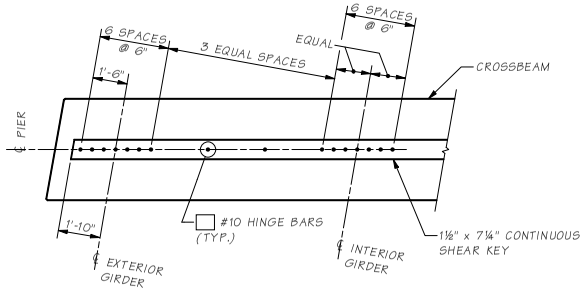

HINGE BAR PLAN

Hinge bar plan is shown for designer. The actual hinge bars detail shall be shown on the crossbeam details sheet.

Bridge Design Engr.	M:\STANDARDS\Girders\WF I-Girders\WF83G\WF83G_HINGE_DIAPHRAGM_INTER_PIER_DET.MAN								
Supervisor					REGION NO.	STATE	FED. AID PROJ. NO.	SHEET NO.	TOTAL SHEETS
Designed By					10	WASH.			
Checked By					JOB NUMBER				
Detailed By									
Bridge Projects Engr.									
Prelim Plan By									
Architect/Specialist	DATE	REVISION	BY	APP'D					

BRIDGE AND STRUCTURES OFFICE

Washington State Department of Transportation

STANDARD PRESTRESSED CONCRETE GIRDERS

WF83G HINGE DIAPHRAGM AT INTERMEDIATE PIER DETAILS

BRIDGE SHEET NO.

SHEET OF SHEETS

SR JOB NO. SHEET

5.6-A11-7

Fri Feb 01 14:11:18 2008

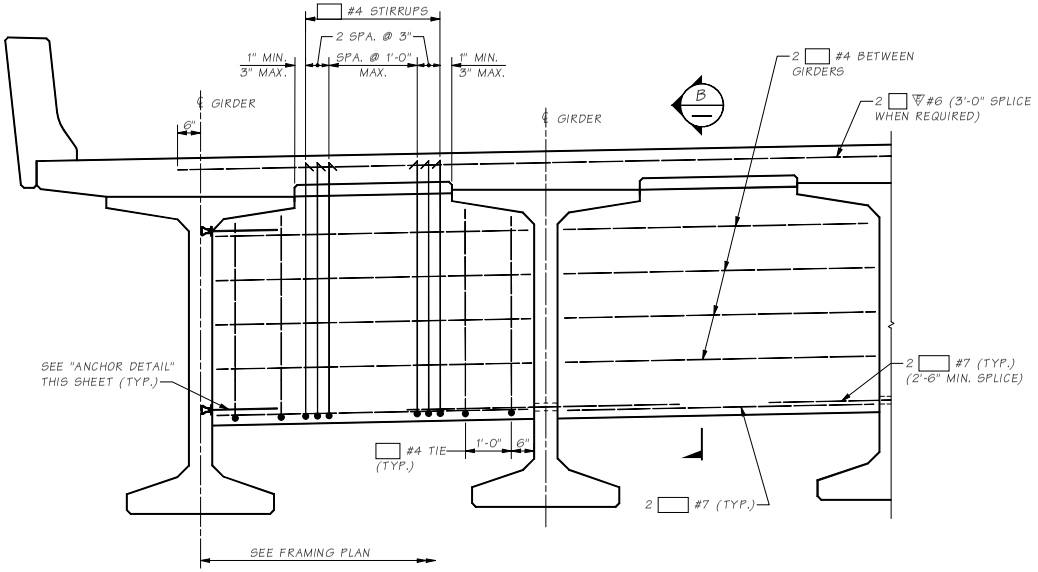

ELEVATION
INTERMEDIATE DIAPHRAGM

DIMENSIONS ARE ALONG DIAPHRAGM

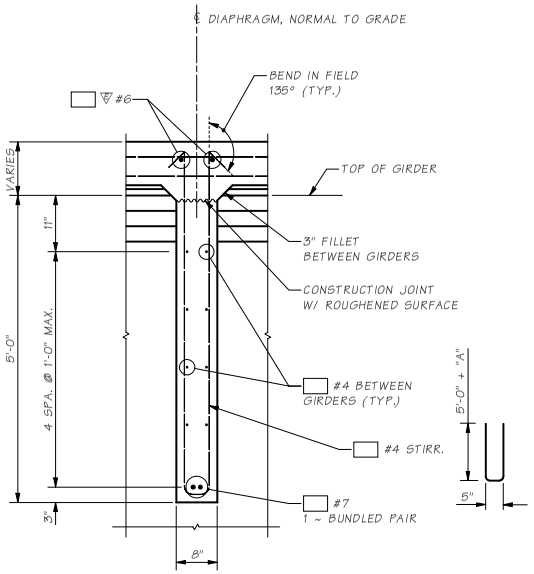

SECTION B

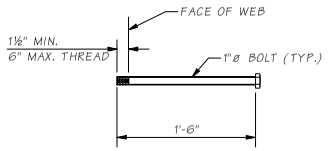

ANCHOR DETAIL

ASTM A-307

NOTE:
GIRDERS SHALL BE HELD RIGIDLY IN PLACE WHEN DIAPHRAGMS ARE PLACED. REINFORCING BAR SHALL BE THREADED THROUGH HOLES IN GIRDERS PRIOR TO PLACING OF EXTERIOR GIRDERS. SEE "GIRDER DETAILS" SHEET FOR DIMENSION "A".

Bridge Design Engr.	M:\STANDARDS\Girders\WF I-Girders\WF83G\WF83G_INTER_DIAPHRAGM_DET.MAN				REGION NO.	STATE	FED. AID PROJ. NO.	SHEET NO.	TOTAL SHEETS
Supervisor					10	WASH.			
Designed By									
Checked By					JOB NUMBER				
Detailed By									
Bridge Projects Engr.									
Prelim Plan By									
Architect/Specialist	DATE	REVISION	BY	APP'D					

BRIDGE AND STRUCTURES OFFICE

Washington State Department of Transportation

STANDARD PRESTRESSED CONCRETE GIRDERS

WF83G INTERMEDIATE DIAPHRAGM DETAILS

BRIDGE SHEET NO. | SHEET | OF | SHEETS

SR | JOB NO. | SHEET

5.6-A11-8

Fri Feb 01 14:11:25 2008

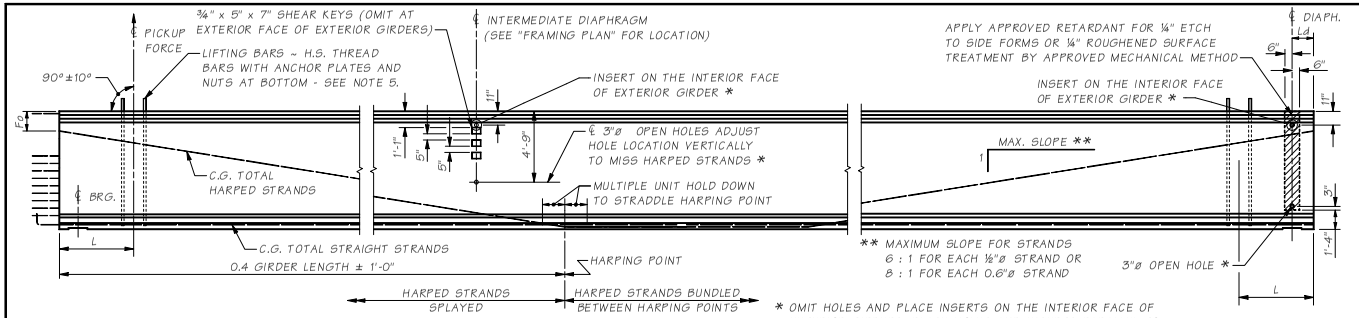

** MAXIMUM SLOPE FOR STRANDS
6 : 1 FOR EACH ½"ø STRAND OR
8 : 1 FOR EACH 0.6"ø STRAND

* OMIT HOLES AND PLACE INSERTS ON THE INTERIOR FACE OF EXTERIOR GIRDERS. PLACE HOLES AND INSERTS PARALLEL TO SKEW. INSERTS SHALL BE 1"ø BURKE HI-TENSILE, LANCASTER MALLEABLE, DAYTON-SUPERIOR F-62 FLARED THIN SLAB (1" x 4⅝") FERRULE INSERT OR APPROVED EQUAL. (TYP.)

END TYPE A

END TYPE B

GIRDER ELEVATION

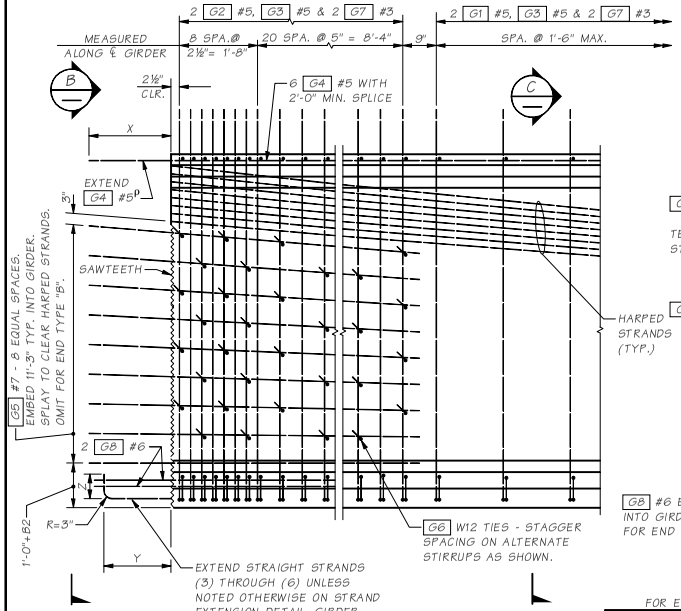

TYPICAL END ELEVATION

END TYPE C SHOWN, OTHER END TYPES SIMILAR

Stirrup spacing shall be determined by the designer.

ᵖ FIELD BENDING REQUIRED TO OBTAIN 1½" CONCRETE COVER AT PAVEMENT SEAT.

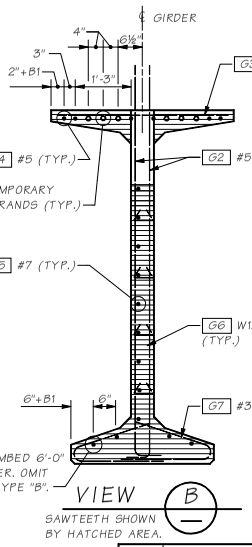

VIEW

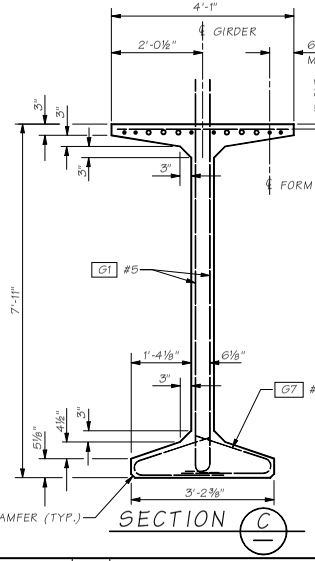

SECTION

NOTES

1. PLAN LENGTH SHALL BE INCREASED AS NECESSARY TO COMPENSATE FOR SHORTENING DUE TO PRESTRESS AND SHRINKAGE.
2. ALL PRETENSIONED AND TEMPORARY STRANDS SHALL BE [½"ø OR 0.6"ø] LOW RELAXATION STRANDS (AASHTO M203 GRADE 270.)
3. FOR END TYPES A, C AND D CUT ALL STRANDS FLUSH WITH THE GIRDER ENDS AND PAINT WITH AN APPROVED EPOXY RESIN, EXCEPT FOR EXTENDED STRANDS AS SHOWN. FOR END TYPE B CUT ALL STRANDS 1" BELOW CONCRETE SURFACE AND GROUT WITH AN APPROVED EPOXY GROUT.
4. THE TOP SURFACE OF THE GIRDER FLANGE SHALL BE ROUGHENED IN ACCORDANCE WITH SECTION 6-02.3(25)H OF THE STANDARD SPECIFICATIONS.
5. LIFTING EMBEDMENTS SHALL BE INSTALLED IN ACCORDANCE WITH SECTION 6-02.3(25)L OF THE STANDARD SPECIFICATIONS.
6. CAUTION SHALL BE EXERCISED IN HANDLING AND PLACING GIRDERS. ALL GIRDERS SHALL BE CHECKED BY THE CONTRACTOR TO ENSURE THAT THEY ARE BRACED ADEQUATELY TO PREVENT TIPPING AND TO CONTROL LATERAL BENDING DURING SHIPPING. ONCE ERECTED, ALL GIRDERS SHALL BE BRACED LATERALLY TO PREVENT TIPPING UNTIL THE DIAPHRAGMS ARE CAST AND CURED.
7. FORMS FOR BEARING PAD RECESSES SHALL BE CONSTRUCTED AND FASTENED IN SUCH A MANNER AS TO NOT CAUSE DAMAGE TO THE GIRDER DURING THE STRAND RELEASE OPERATION.
8. TEMPORARY STRANDS SHALL BE EITHER PRETENSIONED OR POST-TENSIONED IN ACCORDANCE WITH SECTION 6-02.3(25)L OF THE STANDARD SPECIFICATIONS. IF PRETENSIONED, THESE TEMPORARY STRANDS SHALL BE UNBONDED OVER ALL BUT THE END 10'-0" OF THE GIRDER LENGTH. AS AN ALTERNATE, TEMPORARY STRANDS MAY BE POST-TENSIONED ON THE SAME DAY THE PRETENSIONING IS RELEASED INTO THE GIRDER.

INTERMEDIATE DIAPHRAGM:
1/5 points of span for span lengths greater than 160'-0"
1/4 points of span for span lengths 120'-0" to 160'-0"
1/3 points of span for span lengths 80'-0" to 120'-0"
1/2 points of span for span lengths less than 80'-0".

Diaphragm Type	END TYPE	BEARING RECESS	X	Y	Z	SAWTEETH
End Diaph. on Girder	A	YES	1'-10"	1'-6"	9"	YES
"L" Abutment	B	YES	0"	0"	0"	NO
Hinge Diaph. on Interm. Pier	C	NO	1'-10"	1'-6"	9"	YES
Fixed Diaph. @ Interm. Pier	D	NO	1'-10"	ALT. 1 OR ALT. 2 STRAND EXTENSION		YES

FOR END TYPE "C"

ENDS AHEAD ON STATION
G5 BARS LEFT OF ℄
B1 = 0" (G4 , G8)
B2 = 0" (G5)
ENDS BACK ON STATION
G5 BARS RIGHT OF ℄
B1 = 1½"(G4 , G8)
B2 = 3" (G5)

MARK	LOCATION	SIZE	
G1	GIRDER STIRRUPS	5	
G2	GIRDER END STIRRUPS	5	
G3	GIRDER TOP FLANGE	5	STR.
G4	GIRDER LONGIT. FULL LENGTH	5	STR.
G5	GIRDER END LONGIT.	7	STR.
G6	GIRDER END TIES	W12δ	
G7β	GIRDER BOT. FLANGE TIES	3	
G8	GIRDER END LONGIT.	6	STR.
G9β	GIRDER BOT. FLANGE TIES	3	
G10β	GIRDER BOT. FLANGE TIES	3	

BENDING DIAGRAM (ALL DIMENSIONS ARE OUT TO OUT)
NOTE: FOR DIMENSION "A", SEE "GIRDER SCHEDULE"

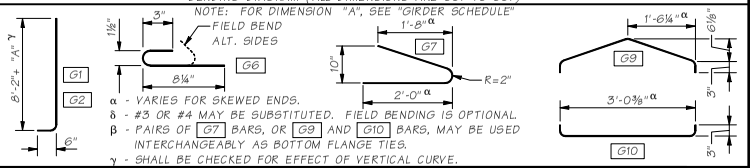

α - VARIES FOR SKEWED ENDS.
δ - #3 OR #4 MAY BE SUBSTITUTED. FIELD BENDING IS OPTIONAL.
β - PAIRS OF G7 BARS, OR G9 AND G10 BARS, MAY BE USED INTERCHANGEABLY AS BOTTOM FLANGE TIES.
γ - SHALL BE CHECKED FOR EFFECT OF VERTICAL CURVE.

Bridge Design Engr.	M:\STANDARDS\Girders\WF I-Girders\WF95G\WF95G1.man			REGION NO.	STATE	FED. AID PROJ. NO.	SHEET NO.	TOTAL SHEETS
Supervisor				10	WASH.			
Designed By				JOB NUMBER				
Checked By								
Detailed By								
Bridge Projects Engr.								
Prelim Plan By								
Architect/Specialist	DATE	REVISION	BY	APP'D				

BRIDGE AND STRUCTURES OFFICE

Washington State Department of Transportation

STANDARD PRESTRESSED CONCRETE GIRDERS

WF95G GIRDER DETAILS 1 OF 3

BRIDGE SHEET NO. SHEET OF SHEETS

JOB NO. 5.6-A12-1 SHEET OF SHEETS

Fri Feb 01 14:12:58 2008

1/5 points of span for span lengths greater than 160'-0"
1/4 points of span for span lengths 120'-0" TO 160'-0"

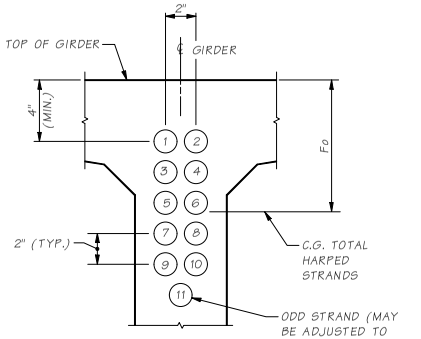

STRAND PATTERN AT GIRDER END

HARPED STRAND LOCATION SEQUENCE SHALL BE AS SHOWN (1), (2) ETC.

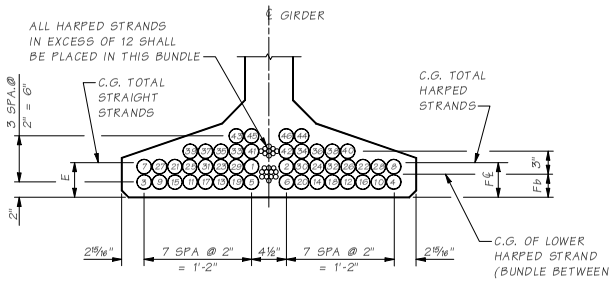

STRAND PATTERN AT ℄ SPAN

STRAIGHT STRAND LOCATION SEQUENCE SHALL BE AS SHOWN (1), (2) ETC.

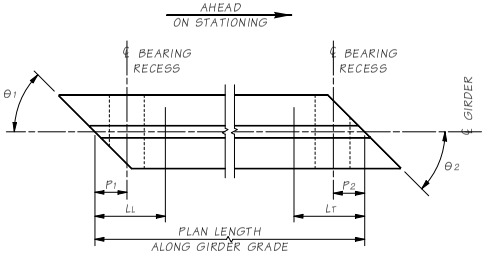

NOTE:
LL AND LT ARE SHIPPING SUPPORT LOCATIONS AT LEADING AND TRAILING ENDS, RESPECTIVELY.

GIRDER SCHEDULE

DIMENSION "A" AT ℄ BEARINGS = BASED ON GIRDER DEFLECTION = "D" AT TIME OF SLAB PLACEMENT (120 DAYS)

SPAN	GIRDER	END 1 TYPE	END 2 TYPE	L	LL	LT	θ1 (DEG.)	θ2 (DEG.)	P1	P2	PLAN LENGTH (ALONG GIRDER GRADE)	MIN. CONC. COMP. STRENGTH @ FINAL F'C (KSI)	MIN. CONC. COMP. STRENGTH @ RELEASE F'CI (KSI)	HARPED NO. OF STRANDS	HARPED JACKING FORCE (KIPS)	STRAIGHT NO. OF STRANDS	STRAIGHT JACKING FORCE (KIPS)	TEMPORARY NO. OF STRANDS	TEMPORARY JACKING FORCE (KIPS)	LOCATION OF C.G. STRANDS E	LOCATION OF C.G. STRANDS F℄	LOCATION OF C.G. STRANDS Fb	LOCATION OF C.G. STRANDS Fo	C	D @ 40 DAYS	D @ 120 DAYS	Ld
-	-	-	-	-	-	-	-	-	-	-	-	-	-	-	-	-	-	-	-	-	-	-	-	-	-	-	-
-	-	-	-	-	-	-	-	-	-	-	-	-	-	-	-	-	-	-	-	-	-	-	-	-	-	-	-

NOTE:
Dimensions shall be shown in Imperial units to the nearest 1/8th inch.

The number of harped strands should not exceed ½ of the number of straight strands.

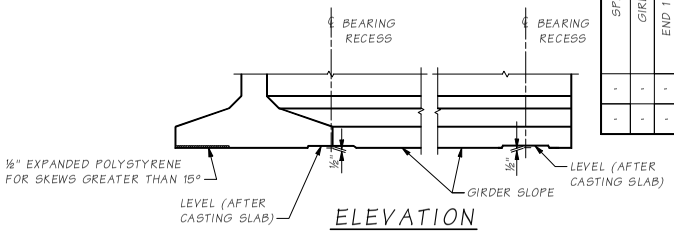

ELEVATION

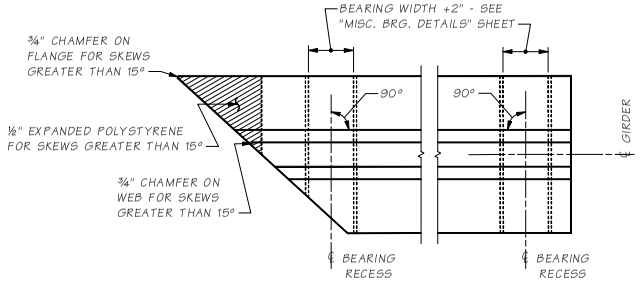

PLAN

BEARING RECESS AND BOTTOM FLANGE SPALL PROTECTION DETAIL

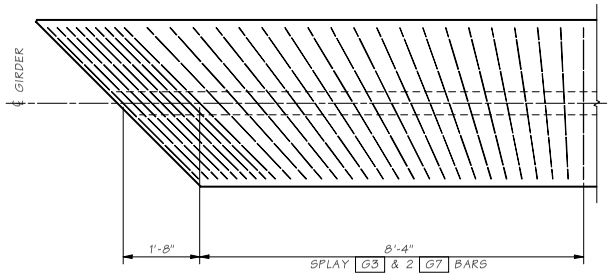

TRANSVERSE REINFORCING SKEWED ENDS

ONLY TRANSVERSE REINF. SHOWN

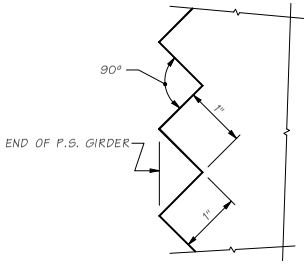

SAWTOOTH DETAILS

SAWTEETH ARE FULL WIDTH - USE SAWTOOTH KEYS FROM BOTTOM OF BOTTOM FLANGE TO BOTTOM OF LOWEST HARPED STRAND AS WELL AS TOP FLANGE ADJACENT TO HARPED STRANDS AS SHOWN IN VIEW B - GIRDER DETAILS 1 OF 3

Bridge Design Engr.	M:\STANDARDS\Girders\WF I-Girders\WF95G\WF95G2.man									
Supervisor										
Designed By										
Checked By										
Detailed By										
Bridge Projects Engr.										
Prelim. Plan By										
Architect/Specialist	DATE	REVISION	BY	APP'D						

REGION NO.	STATE	FED. AID PROJ. NO.	SHEET NO.	TOTAL SHEETS
10	WASH.			
JOB NUMBER				

BRIDGE AND STRUCTURES OFFICE

Washington State Department of Transportation

STANDARD PRESTRESSED CONCRETE GIRDERS

WF95G GIRDER DETAILS 2 OF 3

BRIDGE SHEET NO. — SHEET — OF — SHEETS

SR — JOB NO. — SHEET

5.6-A12-2

Fri Feb 01 14:13:03 2008

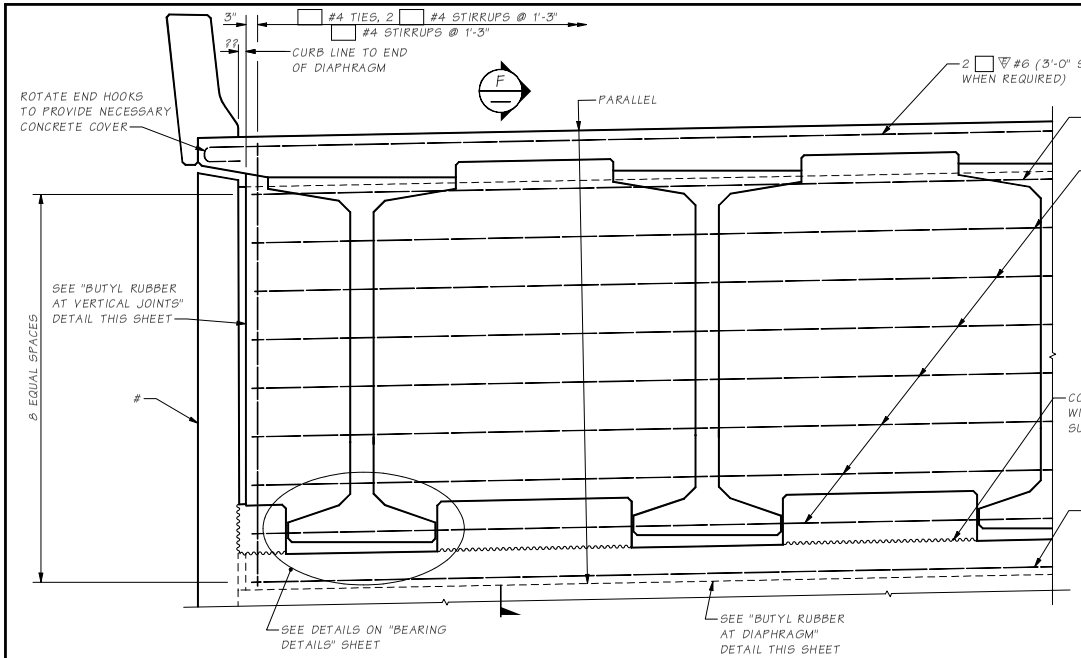

If ground line is less than 2'-0" minimum below the bottom of girder at front face of abutment a curtain wall shall be provided.

ELEVATION END DIAPHRAGM

DIMENSIONS ARE ALONG DIAPHRAGM

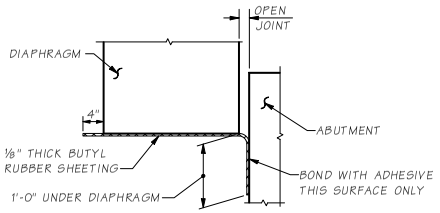

ELEVATION BUTYL RUBBER AT DIAPHRAGM

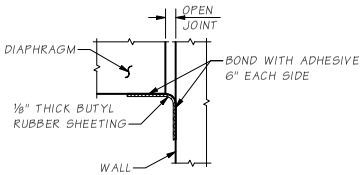

PLAN BUTYL RUBBER AT VERTICAL JOINTS

Bridge length	Open Joint
L ≤ 200'	** = 1.5"
200' < L ≤ 300'	** = 2.0"
300' < L ≤ 400'	** = 2.5"
L > 400'	Special design

* Revise based on size of Open Joint

NOTE:
GIRDERS SHALL BE HELD RIGIDLY IN PLACE WHEN DIAPHRAGMS ARE PLACED.

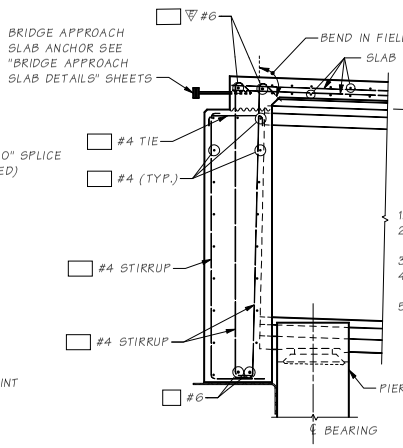

TEMPORARY STRAND CUTTING SEQUENCE

1. ERECT AND BRACE GIRDERS.
2. REMOVE EXPANDED POLYSTYRENE IN 2" x 2" RECESSES IN TOP FLANGE OF GIRDERS.
3. CUT STRAND AND PLASTIC SLEEVE IN 2" x 2" RECESS.
4. REMOVE ALL MOISTURE IN RECESS PRIOR TO FILLING RECESS WITH GROUT.
5. CAST INTERMEDIATE & END DIAPHRAGMS.

SECTION F

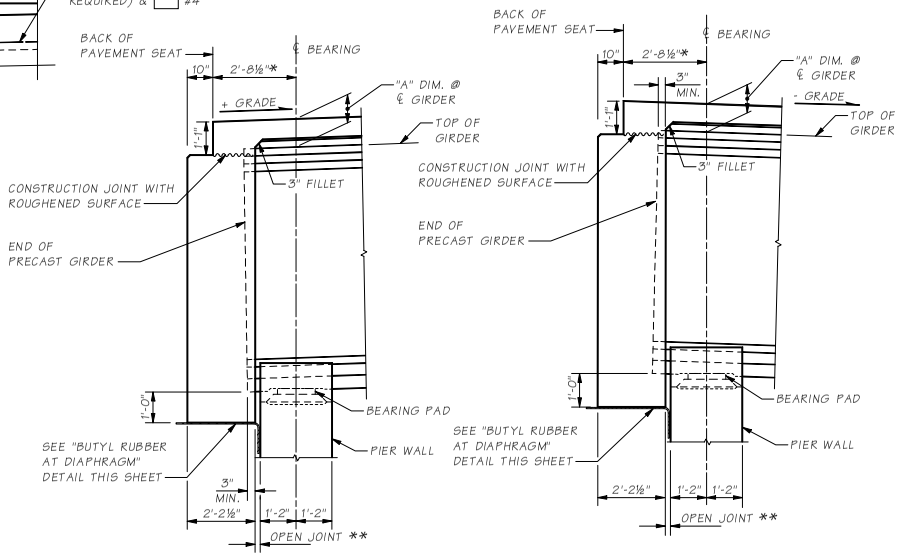

END DIAPHRAGM GEOMETRY

SECTIONS THROUGH END DIAPHRAGMS AT END PIERS SEE "GIRDER DETAILS" SHEET FOR DIMENSION "A". ALL LONGITUDINAL DIMENSIONS ARE NORMAL TO SKEW.

Bridge Design Engr.	M:\STANDARDS\Girders\WF I-Girders\WF95G\WF95G_END_DIA_ON_GIR.MAN				REGION NO.	STATE	FED. AID PROJ. NO.	SHEET NO.	TOTAL SHEETS
Supervisor					10	WASH.			
Designed By					JOB NUMBER				
Checked By									
Detailed By									
Bridge Projects Engr.									
Prelim. Plan By									
Architect/Specialist	DATE	REVISION	BY	APP'D					

BRIDGE AND STRUCTURES OFFICE

Washington State Department of Transportation

STANDARD PRESTRESSED CONCRETE GIRDERS

WF95G END DIAPHRAGM ON GIRDER DETAILS

BRIDGE SHEET NO. / SHEET / OF / SHEETS

SR ____ JOB NO. ____ SHEET

5.6-A12-3

Fri Feb 01 14:13:11 2008

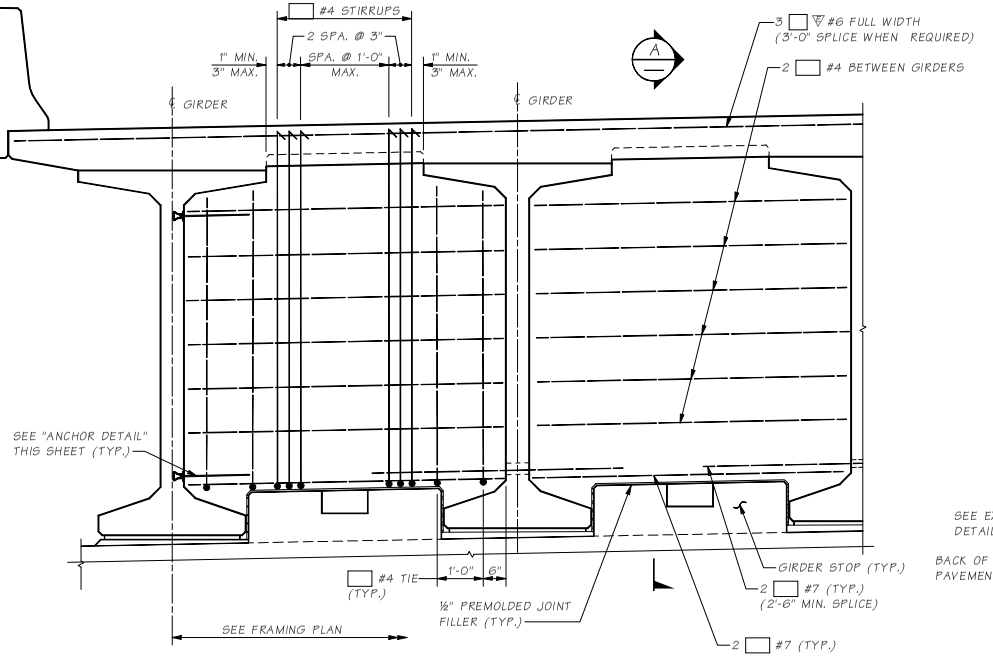

ELEVATION END DIAPHRAGM

DIMENSIONS ARE ALONG DIAPHRAGM

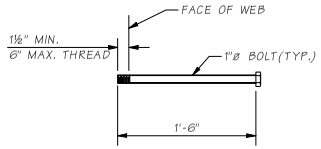

ANCHOR DETAIL

ASTM A-307

NOTE:

GIRDERS SHALL BE HELD RIGIDLY IN PLACE WHEN DIAPHRAGMS ARE PLACED. REINFORCING BAR SHALL BE THREADED THROUGH HOLES IN GIRDERS PRIOR TO PLACING OF EXTERIOR GIRDERS. SEE "GIRDER DETAILS" SHEET FOR DIMENSION "A".

TEMPORARY STRAND CUTTING SEQUENCE

1. ERECT AND BRACE GIRDERS.
2. REMOVE EXPANDED POLYSTYRENE IN 2" x 2" RECESSES IN TOP FLANGE OF GIRDERS.
3. CUT STRAND AND PLASTIC SLEEVE IN 2" x 2" RECESS.
4. REMOVE ALL MOISTURE IN RECESS PRIOR TO FILLING RECESS WITH GROUT.
5. CAST INTERMEDIATE & END DIAPHRAGMS.

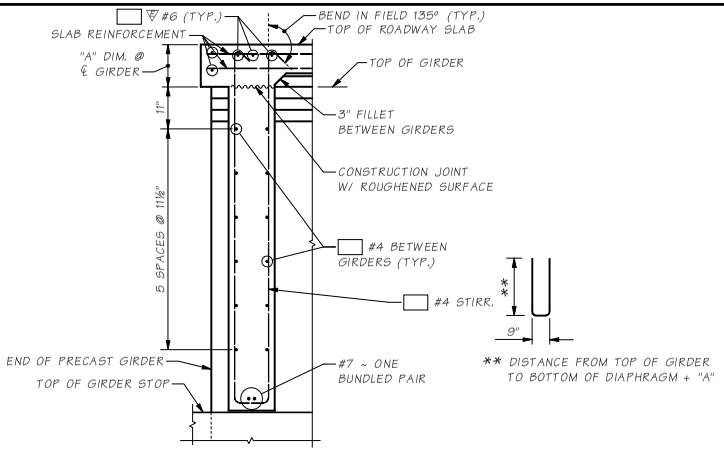

SECTION A

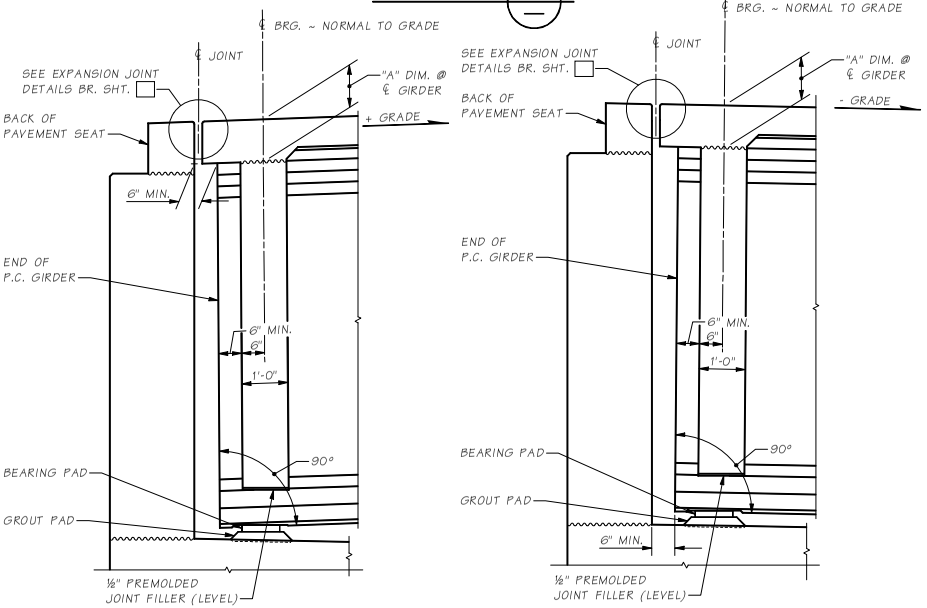

ROADWAY EXPANSION JOINT AT END PIERS

LONGITUDINAL DIMENSIONS ARE NORMAL TO SKEW.
GIRDER STOP NOT SHOWN FOR CLARITY.

Bridge Design Engr.	M:\STANDARDS\Girders\WF I-Girders\WF95G\WF95G_ABUT_PIER_DIAPH_DET.MAN				REGION NO.	STATE	FED. AID PROJ. NO.	SHEET NO.	TOTAL SHEETS
Supervisor					10	WASH			
Designed By									
Checked By					JOB NUMBER				
Detailed By									
Bridge Projects Engr.									
Prelim Plan By									
Architect/Specialist	DATE	REVISION	BY	APP'D					

BRIDGE AND STRUCTURES OFFICE

Washington State Department of Transportation

STANDARD PRESTRESSED CONCRETE GIRDERS

WF95G ABUTMENT TYPE PIER DIAPHRAGM DETAILS

BRIDGE SHEET NO.

SHEET OF SHEETS

SR JOB NO. SHEET 5.6-A12-4

Fri Feb 01 14:13:16 2008

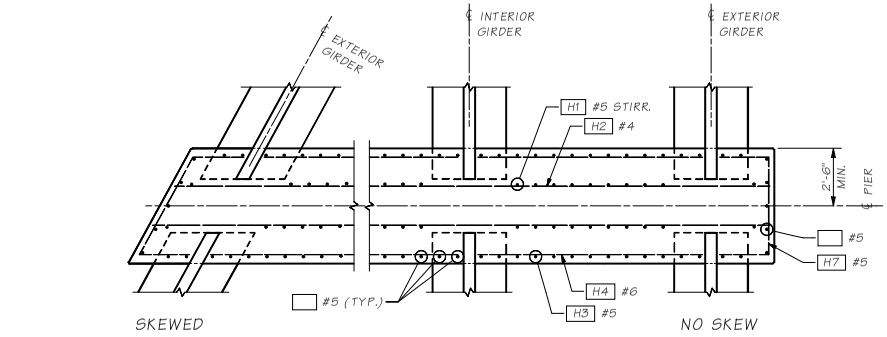

SECTION B

ELEVATION AT TOP OF OAK BLOCK

GIRDER	PIER ?	
	BACK STATION	AHEAD STATION

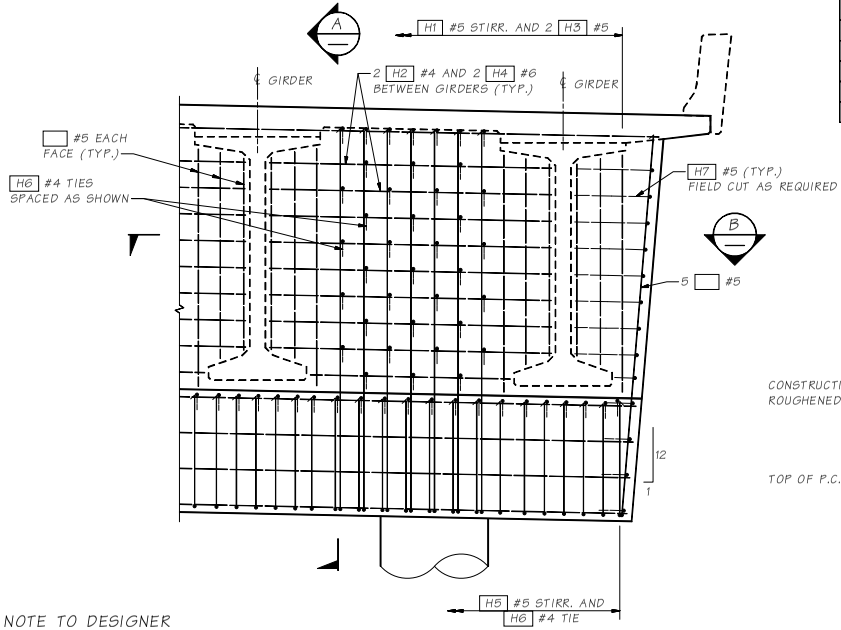

ELEVATION

NOTE TO DESIGNER

The actual bar size and spacing shall be determined by the designer.

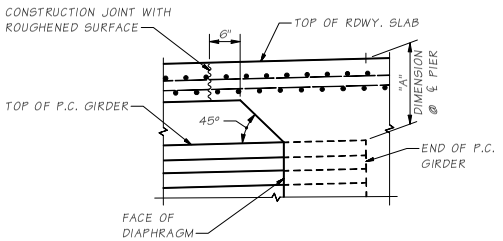

DETAIL C

DIAPHRAGM REINFORCING NOT SHOWN FOR CLARITY

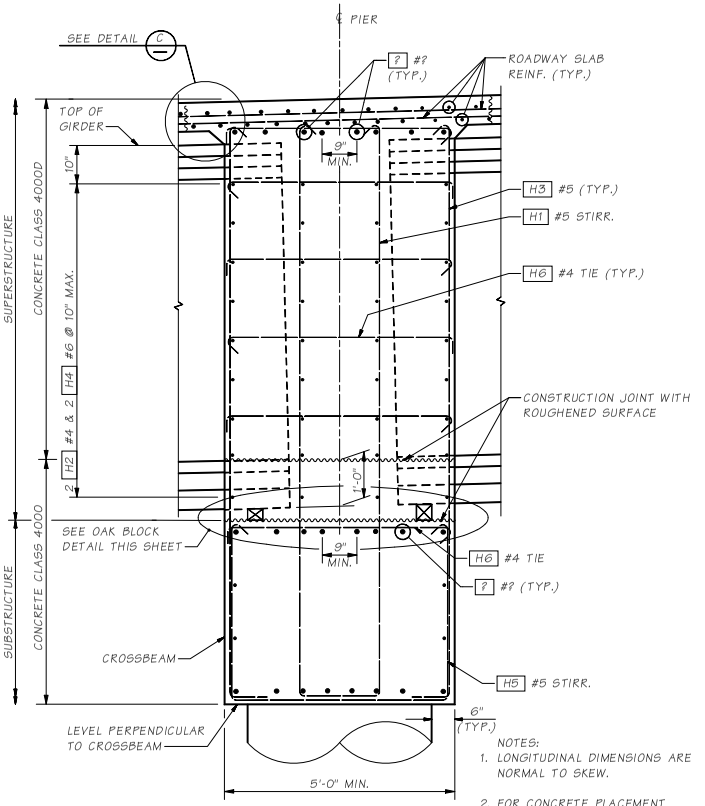

SECTION A

NOTES:
1. LONGITUDINAL DIMENSIONS ARE NORMAL TO SKEW.
2. FOR CONCRETE PLACEMENT PROCEDURE SEE "SUPERSTRUCTURE CONSTRUCTION SEQEUNCE" SHEET.

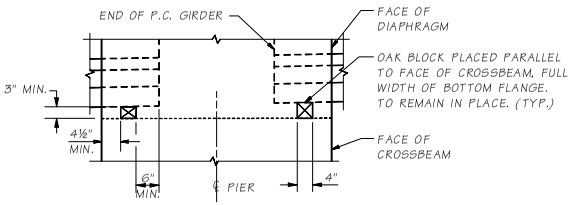

OAK BLOCK DETAIL

LONGITUDINAL DIMENSIONS ARE NORMAL TO SKEW

Bridge Design Engr.	M:\STANDARDS\Girders\WF I-Girders\WF95GW\F95G_FIX_FLUSH_FACE_INTER_PIER_DIAPH_DET.MAN				REGION NO.	STATE	FED. AID PROJ. NO.	SHEET NO.	TOTAL SHEETS
Supervisor					10	WASH			
Designed By					JOB NUMBER				
Checked By									
Detailed By									
Bridge Projects Engr.									
Prelim Plan By									
Architect/Specialist	DATE	REVISION	BY	APP'D					

BRIDGE AND STRUCTURES OFFICE

Washington State Department of Transportation

STANDARD PRESTRESSED CONCRETE GIRDERS

WF95G FIXED FLUSH-FACE DIAPHRAGM AT INTERMEDIATE PIER DETAILS

BRIDGE SHEET NO.

SHEET OF SHEETS

SR JOB NO. SHEET 5.6-A12-5

Fri Feb 01 14:13:21 2008

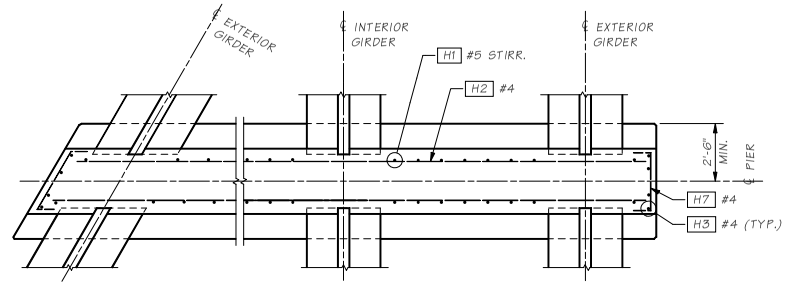

SECTION B

ELEVATION AT TOP OF OAK BLOCK

GIRDER	PIER ?	
	BACK STATION	AHEAD STATION

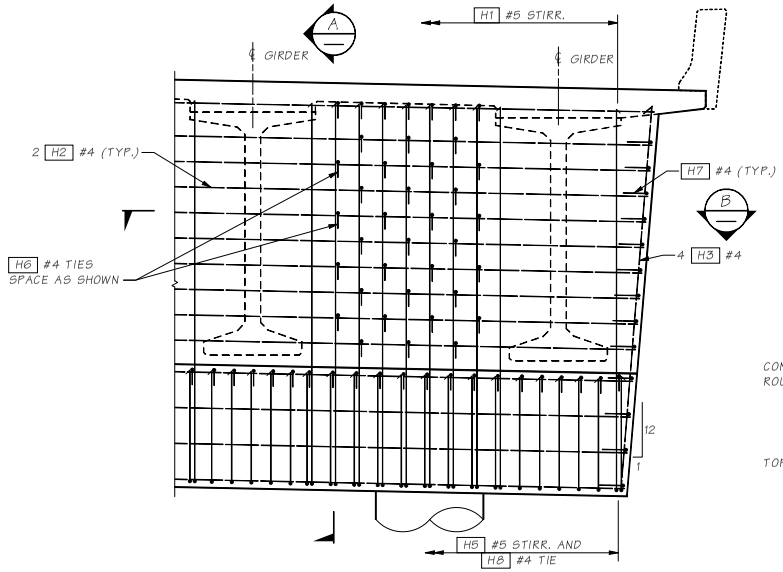

SECTION A

NOTE TO DESIGNER

The actual bar size and spacing shall be determined by the designer.

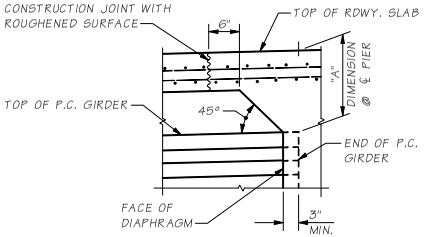

DETAIL C

DIAPHRAGM REINFORCING NOT SHOWN FOR CLARITY

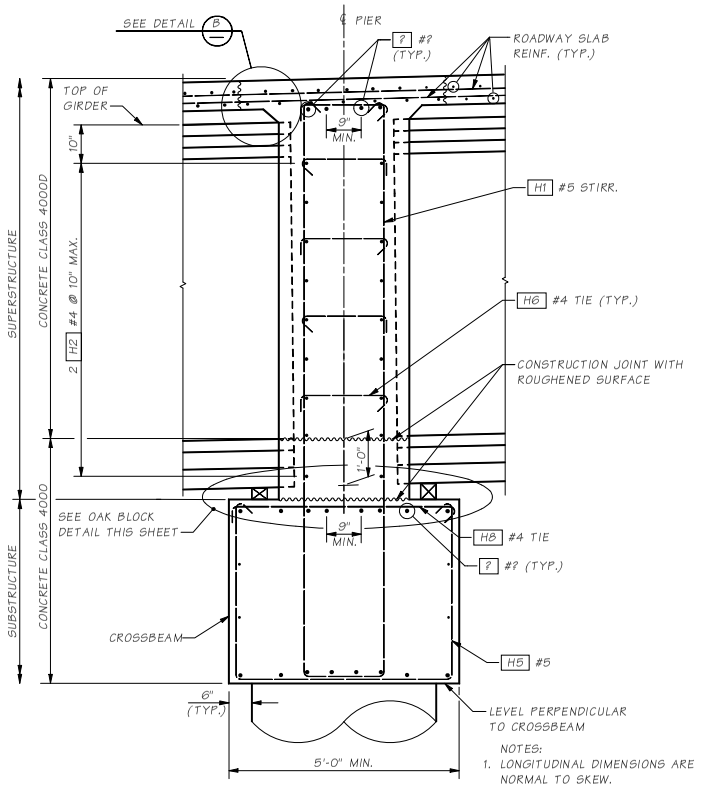

NOTES:
1. LONGITUDINAL DIMENSIONS ARE NORMAL TO SKEW.
2. FOR CONCRETE PLACEMENT PROCEDURE SEE "SUPERSTRUCTURE CONSTRUCTION SEQEUNCE" SHEET.

SECTION A

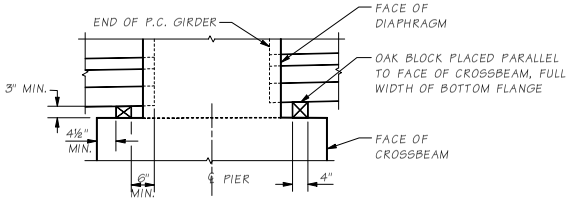

OAK BLOCK DETAIL

LONGITUDINAL DIMENSIONS ARE NORMAL TO SKEW

Bridge Design Engr.	M:\STANDARDS\Girders\WF I-Girders\WF95G\WF95G_FIX_RECESSED_FACE_INTER_PIER_DIAPH_DET.MAN				REGION NO.	STATE	FED. AID PROJ. NO.	SHEET NO.	TOTAL SHEETS	BRIDGE AND STRUCTURES OFFICE
Supervisor					10	WASH.				Washington State Department of Transportation
Designed By					JOB NUMBER					STANDARD PRESTRESSED CONCRETE GIRDERS
Checked By										WF95G FIXED RECESSED-FACE DIAPHRAGM AT INTERMEDIATE PIER DETAILS
Detailed By										BRIDGE SHEET NO.
Bridge Projects Engr.										SHEET OF SHEETS
Prelim. Plan By										
Architect/Specialist	DATE	REVISION	BY	APP'D						

SR JOB NO. SHEET
5.6-A12-6
Fri Feb 01 14:13:28 2008

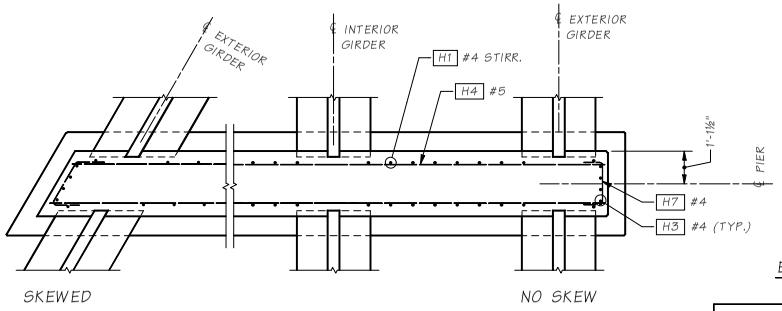

SECTION B

ELEVATION AT TOP OF OAK BLOCK

GIRDER	PIER ?	
	BACK STATION	AHEAD STATION

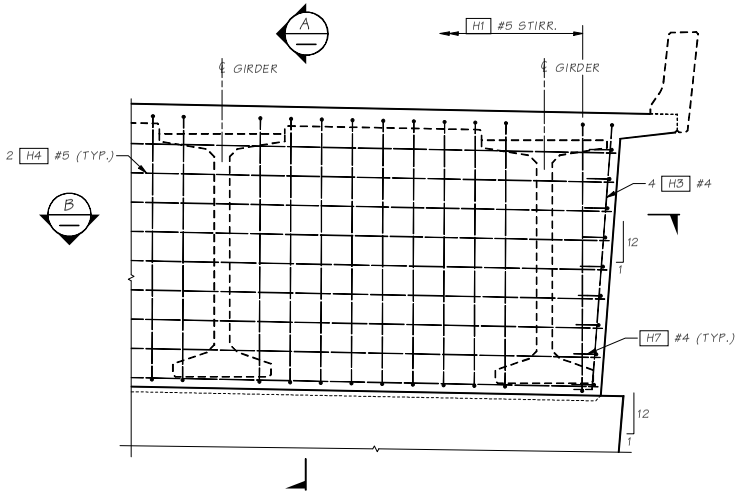

ELEVATION

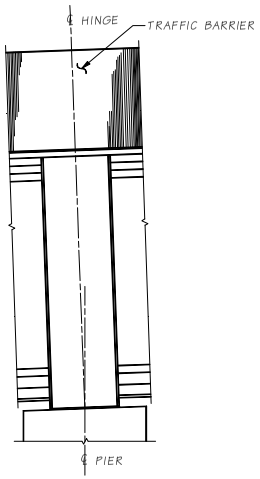

END VIEW
HINGE DIAPHRAGM

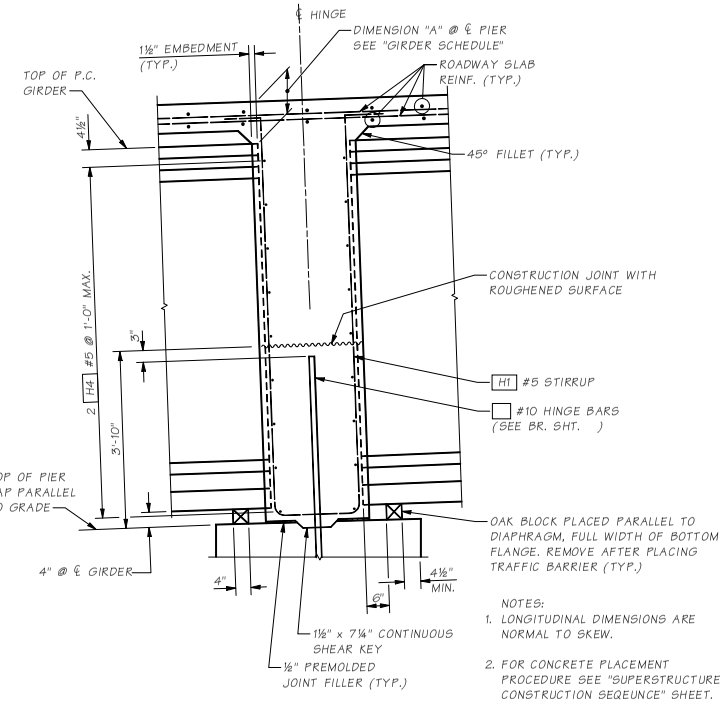

SECTION A

NOTES:
1. LONGITUDINAL DIMENSIONS ARE NORMAL TO SKEW.
2. FOR CONCRETE PLACEMENT PROCEDURE SEE "SUPERSTRUCTURE CONSTRUCTION SEQEUNCE" SHEET.
3. EXTENDED STRANDS AND GIRDER REINFORCING NOT SHOWN FOR CLARITY.

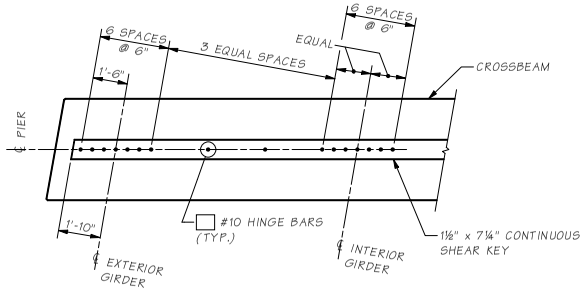

HINGE BAR PLAN

Hinge bar plan is shown for designer. The actual hinge bars detail shall be shown on the crossbeam details sheet.

Bridge Design Engr.	M:\STANDARDS\Girders\WF I-Girders\WF95G\WF95G_HINGE_DIAPHRAGM_INTER_PIER_DET.MAN				REGION NO.	STATE	FED. AID PROJ. NO.	SHEET NO.	TOTAL SHEETS
Supervisor					10	WASH.			
Designed By					JOB NUMBER				
Checked By									
Detailed By									
Bridge Projects Engr.									
Prelim. Plan By									
Architect/Specialist	DATE	REVISION	BY	APP'D					

BRIDGE AND STRUCTURES OFFICE

Washington State Department of Transportation

STANDARD PRESTRESSED CONCRETE GIRDERS

WF95G HINGE DIAPHRAGM AT INTERMEDIATE PIER DETAILS

BRIDGE SHEET NO.

SHEET OF SHEETS

SR JOB NO. SHEET

5.6-A12-7

Fri Feb 01 14:13:35 2008

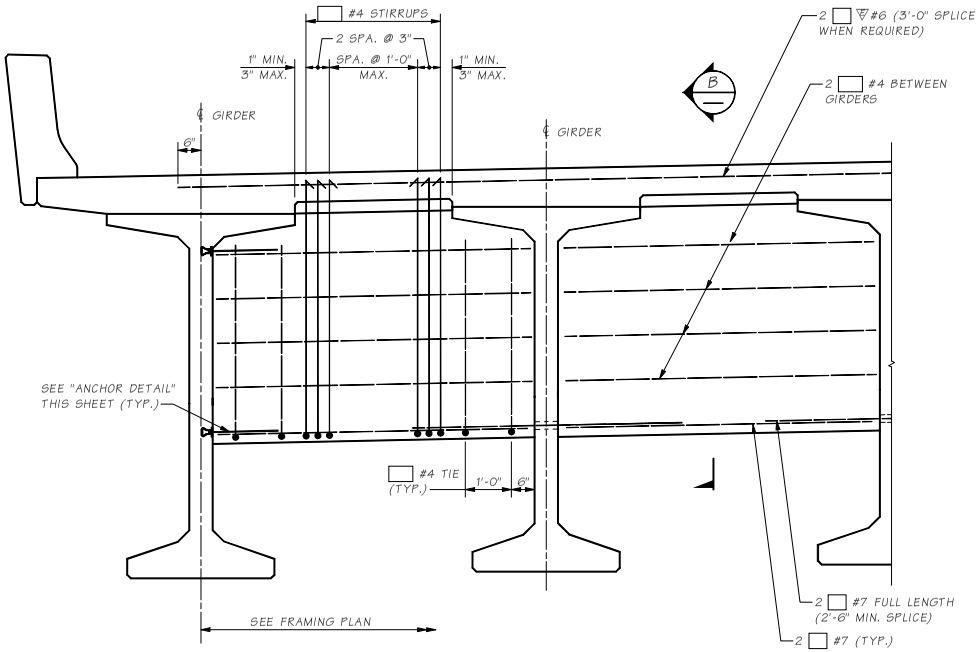

ELEVATION
INTERMEDIATE DIAPHRAGM

DIMENSIONS ARE ALONG DIAPHRAGM

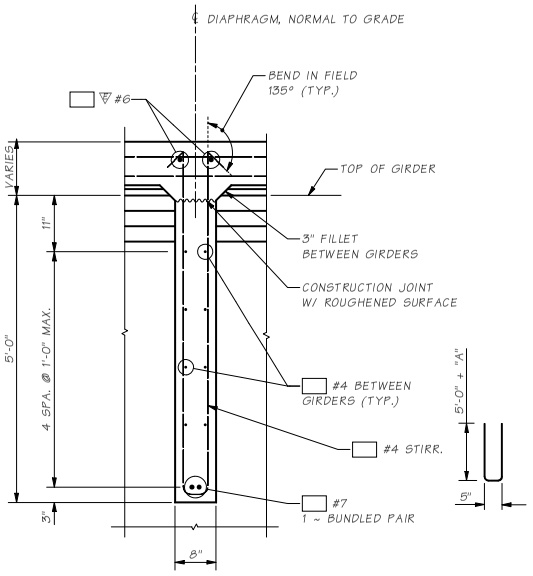

SECTION B

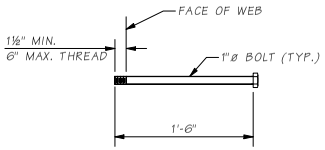

ANCHOR DETAIL

ASTM A-307

NOTE:

GIRDERS SHALL BE HELD RIGIDLY IN PLACE WHEN DIAPHRAGMS ARE PLACED. REINFORCING BAR SHALL BE THREADED THROUGH HOLES IN GIRDERS PRIOR TO PLACING OF EXTERIOR GIRDERS. SEE "GIRDER DETAILS" SHEET FOR DIMENSION "A".

Bridge Design Engr.	M:\STANDARDS\Girders\WF I-Girders\WF95G\WF95G_INTER_DIAPHRAGM_DET.MAN				REGION NO.	STATE	FED. AID PROJ. NO.	SHEET NO.	TOTAL SHEETS
Supervisor					10	WASH.			
Designed By									
Checked By					JOB NUMBER				
Detailed By									
Bridge Projects Engr.									
Prelim. Plan By									
Architect/Specialist	DATE	REVISION	BY	APP'D					

BRIDGE AND STRUCTURES OFFICE

Washington State Department of Transportation

STANDARD PRESTRESSED CONCRETE GIRDERS

WF95G INTERMEDIATE DIAPHRAGM DETAILS

BRIDGE SHEET NO.

SHEET OF SHEETS

SHEET

JOB NO.

SR

5.6-A12-8

Fri Feb 01 14:13:44 2008

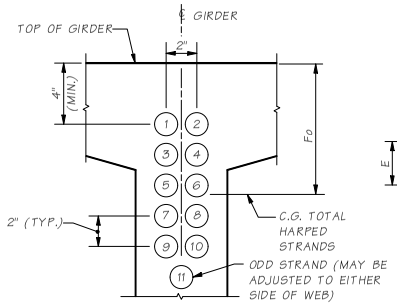

STRAND PATTERN AT GIRDER END

HARPED STRAND LOCATION SEQUENCE SHALL BE AS SHOWN (1), (2) ETC.

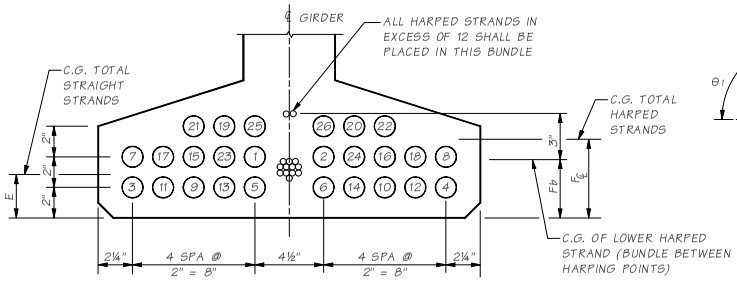

STRAND PATTERN AT ℄ SPAN

STRAIGHT STRAND LOCATION SEQUENCE SHALL BE AS SHOWN (1), (2) ETC.

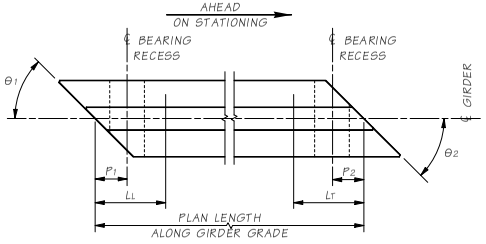

NOTE:
LL AND LT ARE SHIPPING SUPPORT LOCATIONS AT LEADING AND TRAILING ENDS, RESPECTIVELY.

GIRDER SCHEDULE

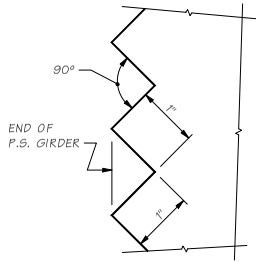

SAWTOOTH DETAILS

SAWTEETH ARE FULL WIDTH - USE SAWTOOTH KEYS FROM BOTTOM OF BOTTOM FLANGE TO BOTTOM OF LOWEST HARPED STRAND AS WELL AS TOP FLANGE ADJACENT TO HARPED STRANDS AS SHOWN IN VIEW B - GIRDER DETAILS 1 OF 2

DIMENSION "A" AT ℄ BEARINGS = — BASED ON GIRDER DEFLECTION = "D" AT TIME OF SLAB PLACEMENT (120 DAYS)

SPAN	GIRDER	END 1 TYPE	END 2 TYPE	L	LL	LT	θ1 (DEG.)	θ2 (DEG.)	P1	P2	PLAN LENGTH (ALONG GIRDER GRADE)	MIN. CONC. COMP. STRENGTH @ FINAL F'C (KSI)	MIN. CONC. COMP. STRENGTH @ RELEASE F'CI (KSI)	HARPED NO. OF STRANDS	HARPED JACKING FORCE (KIPS)	STRAIGHT NO. OF STRANDS	STRAIGHT JACKING FORCE (KIPS)	LOCATION OF C.G. STRANDS E	LOCATION OF C.G. STRANDS F℄	LOCATION OF C.G. STRANDS Fb	LOCATION OF C.G. STRANDS Fo	C	D @ 40 DAYS	D @ 120 DAYS	Ld
-	-	-	-	-	-	-	-	-	-	-	-	-	-	-	-	-	-	-	-	-	-	-	-	-	-
-	-	-	-	-	-	-	-	-	-	-	-	-	-	-	-	-	-	-	-	-	-	-	-	-	-

The number of harped strands should not exceed ½ of the number of straight strands.

NOTE:
Dimensions shall be shown in imperial units to the nearest ⅛".

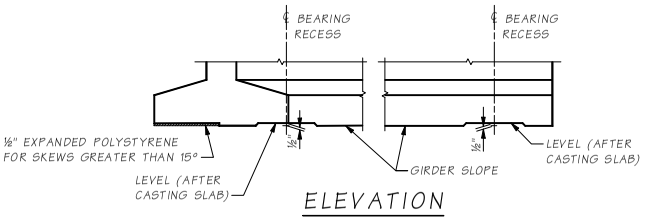

ELEVATION

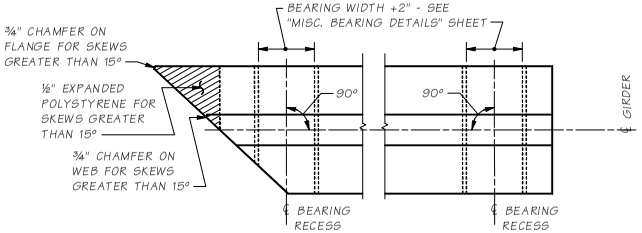

PLAN
BEARING RECESS AND BOTTOM FLANGE SPALL PROTECTION

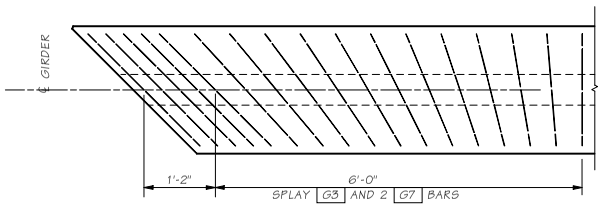

TRANSVERSE REINFORCING SKEWED ENDS

ONLY TRANSVERSE REINF. SHOWN

Bridge Design Engr.	M:\STANDARDS\Girders\Bulb Tee Girder\GIRDER DETAILS 2 OF 3.MAN				
Supervisor			REGION NO.	STATE	FED. AID PROJ. NO.
Designed By			10	WASH	
Checked By			JOB NUMBER		
Detailed By					
Bridge Projects Engr.					
Prelim. Plan By					
Architect/Specialist	DATE	REVISION	BY	APPD	

SHEET NO. | TOTAL SHEETS

BRIDGE AND STRUCTURES OFFICE

Washington State Department of Transportation

STANDARD PRESTRESSED CONCRETE GIRDERS

BULB TEE GIRDER DETAILS 2 OF 3

BRIDGE SHEET NO. | SHEET | OF | SHEETS

JOB NO. 5.6-A13-1 SHEET SR

Fri Apr 25 13:16:54 2008

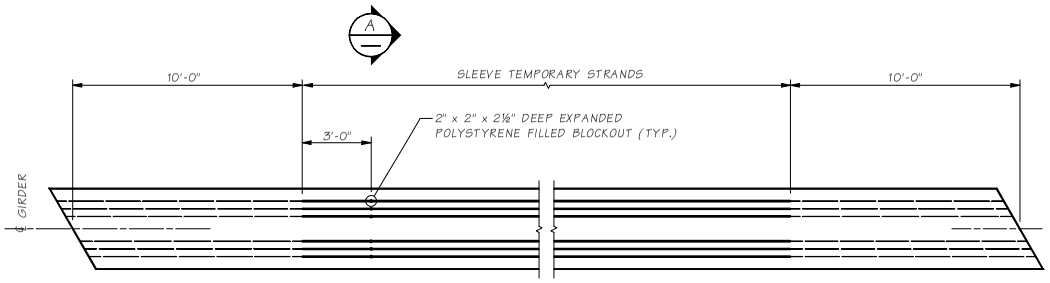

PLAN
PRETENSIONED TEMPORARY TOP STRANDS

POST-TENSIONED TEMPORARY TOP STRANDS SIMILAR, EXCEPT 10'-0" LENGTH OF BONDING OCCURS AT ONE END ONLY. THE OPPOSING END IS ANCHORED WITH PLATES AND STRAND CHUCKS. SEE "GIRDER SCHEDULE" FOR NUMBER OF TEMPORARY STRANDS REQUIRED.

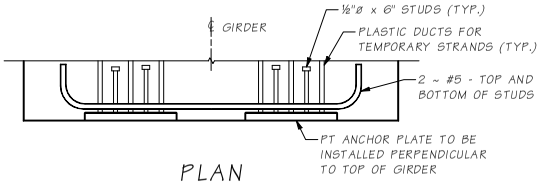

PLAN
TEMPORARY STRAND POST-TENSIONED ALTERNATE

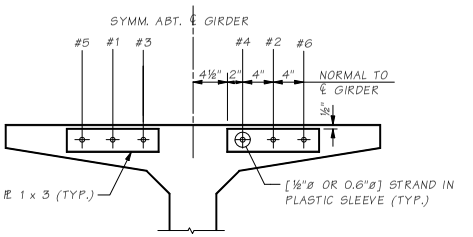

END VIEW
TEMPORARY STRAND POST-TENSIONED ALTERNATE

ADJUST G4 BARS TO CLEAR THE STEEL PLATE

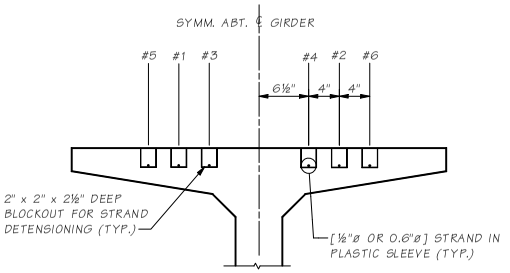

SECTION A

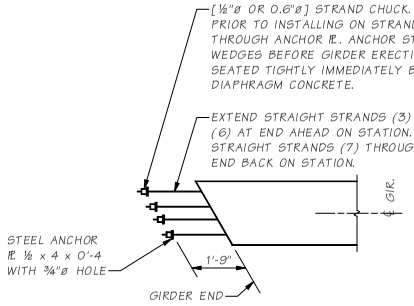

ALTERNATE #1

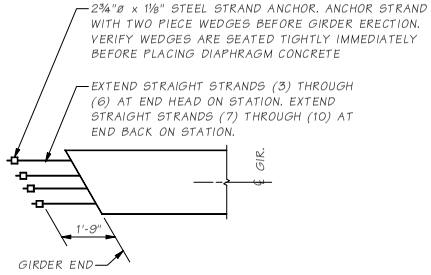

ALTERNATE #2

STRAND EXTENSION DETAIL

Number of extended strands shall be determined by the designer.

Bridge Design Engr.	M:\STANDARDS\Girders\Bulb Tee Girder\GIRDER DETAILS 3 OF 3.MAN				REGION NO.	STATE	FED. AID PROJ. NO.	SHEET NO.	TOTAL SHEETS
Supervisor					10	WASH			
Designed By					JOB NUMBER				
Checked By									
Detailed By									
Bridge Projects Engr.									
Prelim. Plan By									
Architect/Specialist	DATE	REVISION	BY	APPD					

Fri Apr 25 13:17:11 2008

BRIDGE AND STRUCTURES OFFICE

Washington State Department of Transportation

STANDARDS
PRESTRESSED CONCRETE GIRDERS

BULB TEE GIRDER
DETAILS 3 OF 3

BRIDGE SHEET NO.
SHEET OF SHEETS

SR JOB NO. SHEET
5.6-A13-2

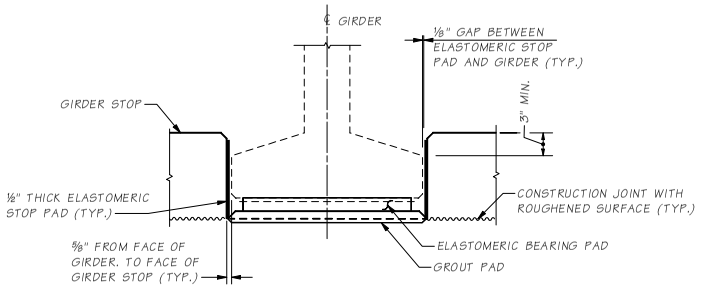

SECTION G

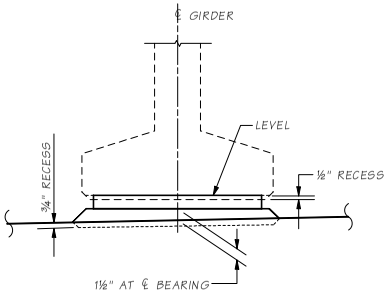

GROUT PAD ELEVATION

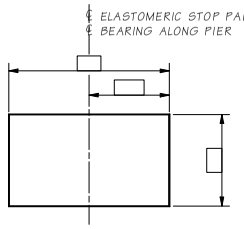

ELASTOMERIC STOP PAD

DUROMETER HARDNESS = 60

NOTE:

1. GIRDER STOPS SHALL BE CONSTRUCTED AFTER GIRDER PLACEMENT.
2. THE ELASTOMERIC STOP PADS SHALL BE CEMENTED TO GIRDER STOPS WITH APPROVED ADHESIVE.

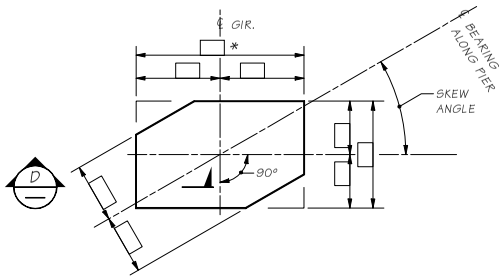

BEARING PAD

LAMINATED ELASTOMERIC BRIDGE PAD ☐ THICK (☐ SHIMS)

Skew angle shown at 30°.

* The edge of the bearing pad shall be set at 1" from the edge of the bottom flange.

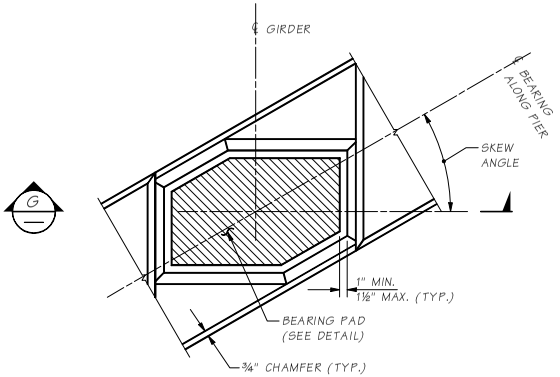

GROUT PAD DETAIL

Skew angle shown at 30°.

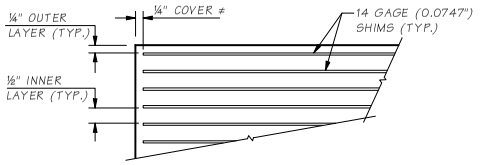

SECTION D

≠ ⅛" for pad thickness ≤ 3"
¼" for 3" < pad thickness ≤ 7"
½" for pad thickness > 7"

BEARING DESIGN TABLE	
SERVICE - I LIMIT STATE	
DEAD LOAD REACTION	KIPS
LIVE LOAD REACTION (W/O IMPACT)	KIPS
UNLOADED HEIGHT	IN.
LOADED HEIGHT (DL)	IN.
DUROMETER HARDNESS	60

Bridge Design Engr.	M:\STANDARDS\Girders\Bulb Tee Girder\BULB TEE MISC. DIAPH DETAIL.MAN								
Supervisor					REGION NO.	STATE	FED. AID PROJ. NO.	SHEET NO.	TOTAL SHEETS
Designed By					10	WASH.			
Checked By					JOB NUMBER				
Detailed By									
Bridge Projects Engr.									
Prelim. Plan By									
Architect/Specialist	DATE	REVISION	BY	APP'D					

BRIDGE AND STRUCTURES OFFICE

Washington State Department of Transportation

STANDARD PRESTRESSED CONCRETE GIRDERS

BULB TEE MISCELLANEOUS BEARING DETAILS

BRIDGE SHEET NO.

SHEET OF SHEETS

SHEET

JOB NO.

SR

5.6-A13-3

Fri Apr 25 13:16:31 2008

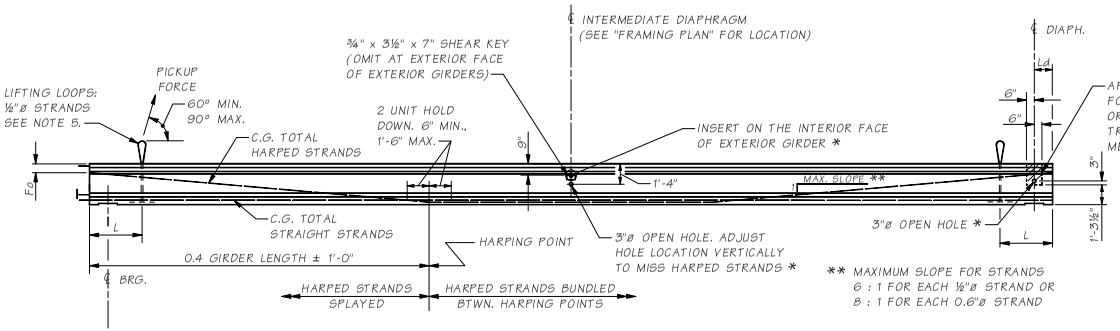

END TYPE A

GIRDER ELEVATION

END TYPE B

* OMIT HOLES AND PLACE INSERTS ON THE INTERIOR FACE OF EXTERIOR GIRDERS. PLACE HOLES AND INSERTS PARALLEL TO SKEW. INSERTS SHALL BE 1"ø BURKE HI-TENSILE, LANCASTER MALLEABLE, DAYTON-SUPERIOR F-62 FLARED THIN SLAB (1" x 4⅝") FERRULE OR APPROVED EQUAL. (TYP.)

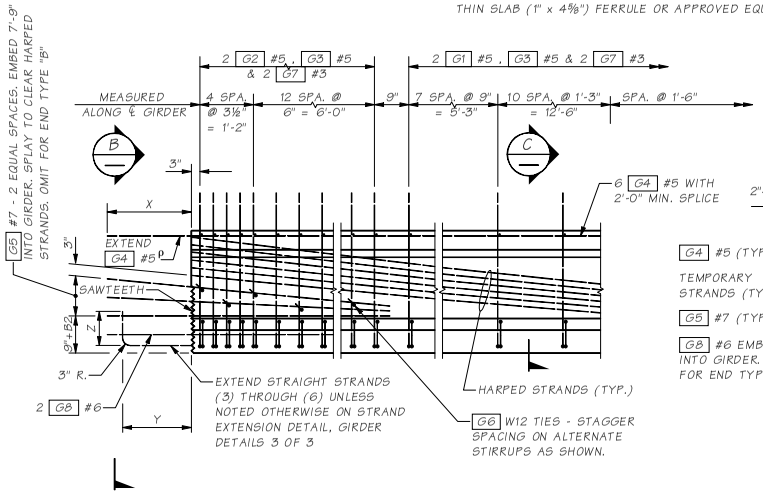

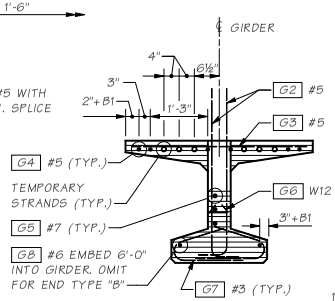

VIEW B

SAWTEETH SHOWN BY HATCHED AREA.

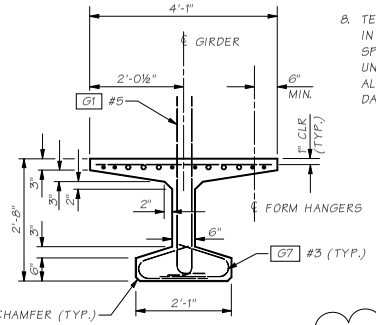

SECTION C

NOTES:

1. PLAN LENGTH SHALL BE INCREASED AS NECESSARY TO COMPENSATE FOR SHORTENING DUE TO PRESTRESS AND SHRINKAGE.
2. ALL PRETENSIONED AND TEMPORARY STRANDS SHALL BE [½"ø OR 0.6"ø] LOW RELAXATION STRANDS (AASHTO M203 GRADE 270.)
3. FOR END TYPES A, C AND D CUT ALL STRANDS FLUSH WITH THE GIRDER ENDS AND PAINT WITH AN APPROVED EPOXY RESIN, EXCEPT FOR EXTENDED STRANDS AS SHOWN. FOR END TYPE B CUT ALL STRANDS 1" BELOW CONCRETE SURFACE AND GROUT WITH AN APPROVED EPOXY GROUT.
4. THE TOP SURFACE OF THE GIRDER FLANGE SHALL BE ROUGHENED IN ACCORDANCE WITH SECTION 6-02.3(25)H OF THE STANDARD SPECIFICATIONS.
5. LIFTING EMBEDMENTS SHALL BE INSTALLED IN ACCORDANCE WITH SECTION 6-02.3(25)L OF THE STANDARD SPECIFICATIONS.
6. CAUTION SHALL BE EXERCISED IN HANDLING AND PLACING GIRDERS. ALL GIRDERS SHALL BE CHECKED BY THE CONTRACTOR TO ENSURE THAT THEY ARE BRACED ADEQUATELY TO PREVENT TIPPING AND TO CONTROL LATERAL BENDING DURING SHIPPING. ONCE ERECTED, ALL GIRDERS SHALL BE BRACED LATERALLY TO PREVENT TIPPING UNTIL THE DIAPHRAGMS ARE CAST AND CURED.
7. FORMS FOR BEARING PAD RECESSES SHALL BE CONSTRUCTED AND FASTENED IN SUCH A MANNER AS TO NOT CAUSE DAMAGE TO THE GIRDER DURING THE STRAND RELEASE OPERATION.
8. TEMPORARY STRANDS SHALL BE EITHER PRETENSIONED OR POST-TENSIONED IN ACCORDANCE WITH SECTION 6-02.3(25)L OF THE STANDARD SPECIFICATIONS. IF PRETENSIONED, THESE TEMPORARY STRANDS SHALL BE UNBONDED OVER ALL BUT THE END 10'-0" OF THE GIRDER LENGTH. AS AN ALTERNATE, TEMPORARY STRANDS MAY BE POST-TENSIONED ON THE SAME DAY THE PRETENSIONING IS RELEASED INTO THE GIRDER.

INTERMEDIATE DIAPHRAGM:
1/3 points of span for span lengths 80'-0" to 120'-0"
1/2 points of span for span lengths less than 40'-0" to 80'-0"
No intermediate diaphragm for span lengths 40'-0" or less.

Diaphragm Type	END TYPE	BEARING RECESS	X	Y	Z	SAWTEETH
End Diaph. on Girder	A	YES	1'-10"	1'-6"	9"	YES
"L" Abutment	B	YES	0"	0"	0"	NO
Hinge Diaph. on Interm. Pier	C	NO	1'-10"	1'-6"	9"	YES
Fixed Diaph. @ Interm. Pier	D	NO	1'-10"	ALT. 1 OR ALT. 2 STRAND EXTENSION		YES

TYPICAL END ELEVATION

END TYPE C SHOWN, OTHER END TYPES SIMILAR

ρ FIELD BENDING REQUIRED TO OBTAIN 1½" CONCRETE COVER AT PAVEMENT SEAT.

(stirrup spacing shall be determined by the designer)

FOR END TYPE "C"

ENDS AHEAD ON STATION
G5 BARS LEFT OF ℄
B1 = 0" (G4 , G8)
B2 = 0" (G5)
ENDS BACK ON STATION
G5 BARS RIGHT OF ℄
B1 = 1½"(G4 , G8)
B2 = 3" (G5)

MARK	LOCATION	SIZE	
G1	GIRDER STIRRUPS	5	
G2	GIRDER END STIRRUPS	5	
G3	GIRDER TOP FLANGE	5	STR.
G4	GIRDER LONGIT. FULL LENGTH	5	STR.
G5	GIRDER END LONGIT.	7	STR.
G6	GIRDER END TIES	W12δ	
G7β	GIRDER BOT. FLANGE TIES	3	
G8	GIRDER END LONGIT.	6	STR.
G9β	GIRDER BOT. FLANGE TIES	3	
G10β	GIRDER BOT. FLANGE TIES	3	

BENDING DIAGRAM (ALL DIMENSIONS ARE OUT TO OUT)

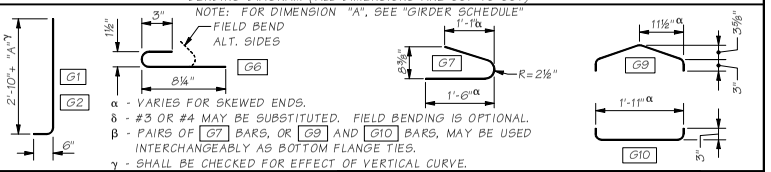

α - VARIES FOR SKEWED ENDS.
δ - #3 OR #4 MAY BE SUBSTITUTED. FIELD BENDING IS OPTIONAL.
β - PAIRS OF G7 BARS, OR G9 AND G10 BARS, MAY BE USED INTERCHANGEABLY AS BOTTOM FLANGE TIES.
γ - SHALL BE CHECKED FOR EFFECT OF VERTICAL CURVE.

Bridge Design Engr.	M:\STANDARDS\Girders\Bulb Tee Girder\W32BTG1.man								
Supervisor					REGION NO.	STATE	FED. AID PROJ. NO.	SHEET NO.	TOTAL SHEETS
Designed By					10	WASH.			
Checked By					JOB NUMBER				
Detailed By									
Bridge Projects Engr.									
Prelim. Plan By									
Architect/Specialist	DATE	REVISION	BY	APPD					

BRIDGE AND STRUCTURES OFFICE

Washington State Department of Transportation

STANDARD PRESTRESSED CONCRETE GIRDERS

W32BTG GIRDER DETAILS 1 OF 3

BRIDGE SHEET NO. SHEET OF SHEETS

SR JOB NO. SHEET 5.6-A13-4

Fri Apr 25 13:17:39 2008

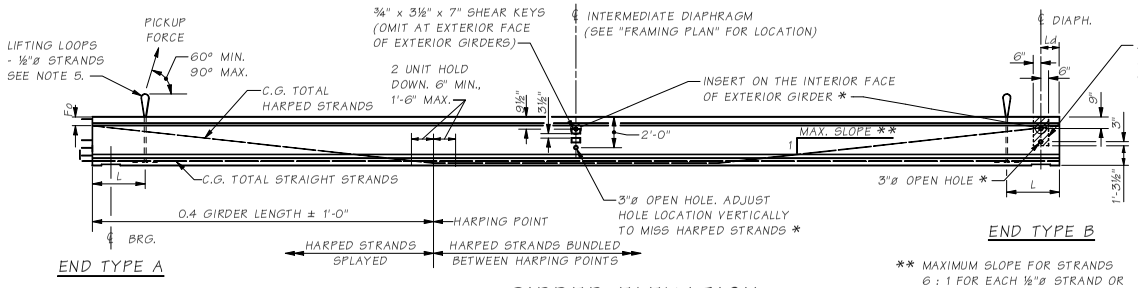

GIRDER ELEVATION

* OMIT HOLES AND PLACE INSERTS ON THE INTERIOR FACE OF EXTERIOR GIRDERS. PLACE HOLES AND INSERTS PARALLEL TO SKEW. INSERTS SHALL BE 1"ø BURKE HI-TENSILE, LANCASTER MALLEABLE, DAYTON-SUPERIOR F-62 FLARED THIN SLAB (1" x 4⅝") FERRULE OR APPROVED EQUAL. (TYP.)

** MAXIMUM SLOPE FOR STRANDS 6 : 1 FOR EACH ½"ø STRAND OR 8 : 1 FOR EACH 0.6"ø STRAND

NOTES:

1. PLAN LENGTH SHALL BE INCREASED AS NECESSARY TO COMPENSATE FOR SHORTENING DUE TO PRESTRESS AND SHRINKAGE.
2. ALL PRETENSIONED AND TEMPORARY STRANDS SHALL BE [½"ø OR 0.6"ø] LOW RELAXATION STRANDS (AASHTO M203 GRADE 270.)
3. FOR END TYPES A, C AND D CUT ALL STRANDS FLUSH WITH THE GIRDER ENDS AND PAINT WITH AN APPROVED EPOXY RESIN, EXCEPT FOR EXTENDED STRANDS AS SHOWN. FOR END TYPE B CUT ALL STRANDS 1" BELOW CONCRETE SURFACE AND GROUT WITH AN APPROVED EPOXY GROUT.
4. THE TOP SURFACE OF THE GIRDER FLANGE SHALL BE ROUGHENED IN ACCORDANCE WITH SECTION 6-02.3(25)H OF THE STANDARD SPECIFICATIONS.
5. LIFTING EMBEDMENTS SHALL BE INSTALLED IN ACCORDANCE WITH SECTION 6-02.3(25)L OF THE STANDARD SPECIFICATIONS.
6. CAUTION SHALL BE EXERCISED IN HANDLING AND PLACING GIRDERS. ALL GIRDERS SHALL BE CHECKED BY THE CONTRACTOR TO ENSURE THAT THEY ARE BRACED ADEQUATELY TO PREVENT TIPPING AND TO CONTROL LATERAL BENDING DURING SHIPPING. ONCE ERECTED, ALL GIRDERS SHALL BE BRACED LATERALLY TO PREVENT TIPPING UNTIL THE DIAPHRAGMS ARE CAST AND CURED.
7. FORMS FOR BEARING PAD RECESSES SHALL BE CONSTRUCTED AND FASTENED IN SUCH A MANNER AS TO NOT CAUSE DAMAGE TO THE GIRDER DURING THE STRAND RELEASE OPERATION.
8. TEMPORARY STRANDS SHALL BE EITHER PRETENSIONED OR POST-TENSIONED IN ACCORDANCE WITH SECTION 6-02.3(25)L OF THE STANDARD SPECIFICATIONS. IF PRETENSIONED, THESE TEMPORARY STRANDS SHALL BE UNBONDED OVER ALL BUT THE END 10'-0" OF THE GIRDER LENGTH. AS AN ALTERNATE, TEMPORARY STRANDS MAY BE POST-TENSIONED ON THE SAME DAY THE PRETENSIONING IS RELEASED INTO THE GIRDER.

INTERMEDIATE DIAPHRAGM:
1/3 points of span for span lengths 80'-0" to 120'-0"
1/2 points of span for span lengths less than 40'-0" to 80'-0"
No intermediate diaphragm for span lengths 40'-0" or less.

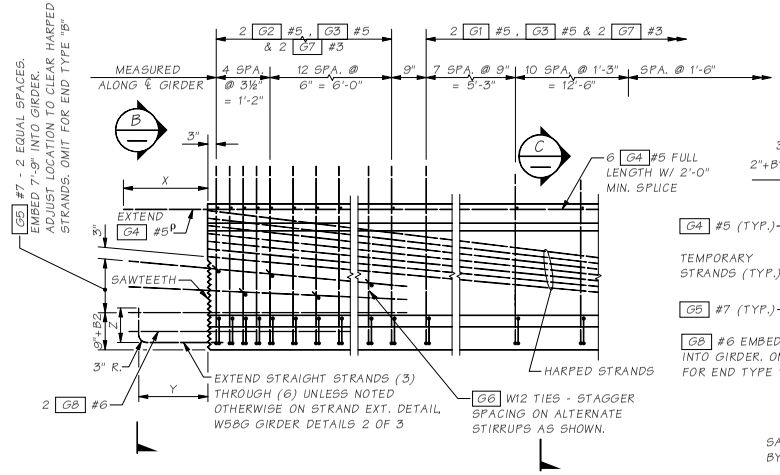

TYPICAL END ELEVATION

END TYPE C SHOWN, OTHER END TYPES SIMILAR

ρ FIELD BENDING REQUIRED TO OBTAIN 1½" CONCRETE COVER AT PAVEMENT SEAT.

(stirrup spacing shall be determined by the designer)

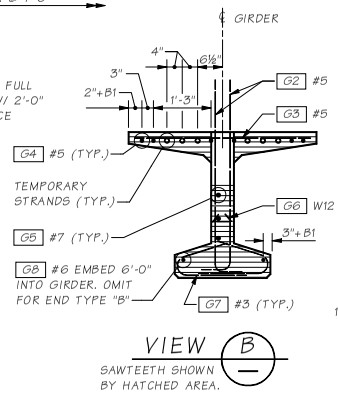

VIEW B

SAWTEETH SHOWN BY HATCHED AREA.

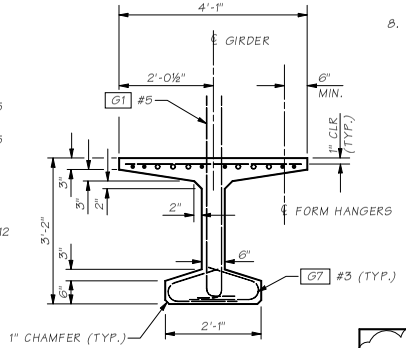

SECTION C

Diaphragm Type	END TYPE	BEARING RECESS	X	Y	Z	SAWTEETH
End Diaph. on Girder	A	YES	1'-10"	1'-6"	9"	YES
"L" Abutment	B	YES	0"	0"	0"	NO
Hinge Diaph. on Interm. Pier	C	NO	1'-10"	1'-6"	9"	YES
Fixed Diaph. @ Interm. Pier	D	NO	1'-10"	ALT. 1 OR ALT. 2 STRAND EXTENSION		YES

FOR END TYPE "C"

ENDS AHEAD ON STATION
G5 BARS LEFT OF ℄
B1 = 0" (G4 , G8)
B2 = 0" (G5)
ENDS BACK ON STATION
G5 BARS RIGHT OF ℄
B1 = 1½"(G4 , G8)
B2 = 3" (G5)

MARK	LOCATION	SIZE	
G1	GIRDER STIRRUPS	5	
G2	GIRDER END STIRRUPS	5	
G3	GIRDER TOP FLANGE	5	STR.
G4	GIRDER LONGIT. FULL LENGTH	5	STR.
G5	GIRDER END LONGIT.	7	STR.
G6	GIRDER END TIES	W12δ	
G7β	GIRDER BOT. FLANGE TIES	3	
G8	GIRDER END LONGIT.	6	STR.
G9β	GIRDER BOT. FLANGE TIES	3	
G10β	GIRDER BOT. FLANGE TIES	3	

BENDING DIAGRAM (ALL DIMENSIONS ARE OUT TO OUT)
NOTE: FOR DIMENSION "A", SEE "GIRDER SCHEDULE"

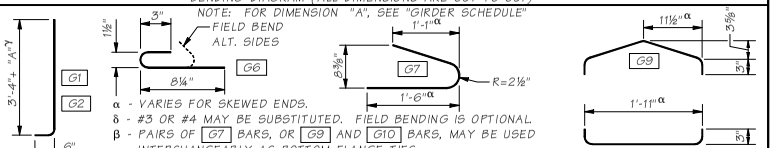

α - VARIES FOR SKEWED ENDS.
δ - #3 OR #4 MAY BE SUBSTITUTED. FIELD BENDING IS OPTIONAL.
β - PAIRS OF G7 BARS, OR G9 AND G10 BARS, MAY BE USED INTERCHANGEABLY AS BOTTOM FLANGE TIES.
γ - SHALL BE CHECKED FOR EFFECT OF VERTICAL CURVE.

Bridge Design Engr.	M:\STANDARDS\Girders\Bulb Tee Girder\W38BTG1.man				REGION NO.	STATE	FED. AID PROJ. NO.	SHEET NO.	TOTAL SHEETS
Supervisor					10	WASH.			
Designed By					JOB NUMBER				
Checked By									
Detailed By									
Bridge Projects Engr.									
Prelim. Plan By									
Architect/Specialist	DATE	REVISION	BY	APP'D					

Fri Feb 01 14:20:35 2008

BRIDGE AND STRUCTURES OFFICE

Washington State Department of Transportation

STANDARD PRESTRESSED CONCRETE GIRDERS

W38BTG GIRDER DETAILS 1 OF 3

BRIDGE SHEET NO. — SHEET — OF — SHEETS

SR — JOB NO. — SHEET

5.6-A14-1

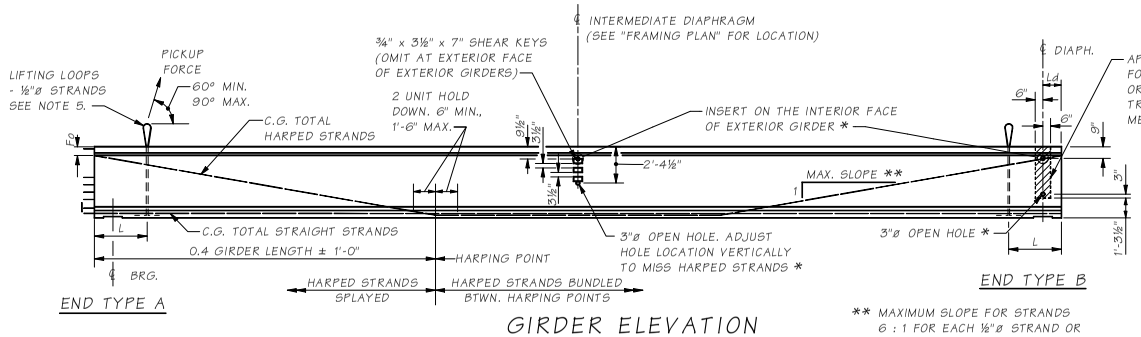

GIRDER ELEVATION

* OMIT HOLES AND PLACE INSERTS ON THE INTERIOR FACE OF EXTERIOR GIRDERS. PLACE HOLES AND INSERTS PARALLEL TO SKEW. INSERTS SHALL BE 1"ø BURKE HI-TENSILE, LANCASTER MALLEABLE, DAYTON-SUPERIOR F-62 FLARED THIN SLAB (1" x 4⅝") FERRULE OR APPROVED EQUAL. (TYP.)

** MAXIMUM SLOPE FOR STRANDS
6 : 1 FOR EACH ½"ø STRAND OR
8 : 1 FOR EACH 0.6"ø STRAND

℄ DIAPH. APPLY APPROVED RETARDANT FOR ¼" ETCH TO SIDE FORMS OR ¼" ROUGHENED SURFACE TREATMENT BY APPROVED MECHANICAL METHOD

NOTES:

1. PLAN LENGTH SHALL BE INCREASED AS NECESSARY TO COMPENSATE FOR SHORTENING DUE TO PRESTRESS AND SHRINKAGE.
2. ALL PRETENSIONED AND TEMPORARY STRANDS SHALL BE [½"ø OR 0.6"ø] LOW RELAXATION STRANDS (AASHTO M203 GRADE 270.)
3. FOR END TYPES A, C AND D CUT ALL STRANDS FLUSH WITH THE GIRDER ENDS AND PAINT WITH AN APPROVED EPOXY RESIN, EXCEPT FOR EXTENDED STRANDS AS SHOWN. FOR END TYPE B CUT ALL STRANDS 1" BELOW CONCRETE SURFACE AND GROUT WITH AN APPROVED EPOXY GROUT.
4. THE TOP SURFACE OF THE GIRDER FLANGE SHALL BE ROUGHENED IN ACCORDANCE WITH SECTION 6-02.3(25)H OF THE STANDARD SPECIFICATIONS.
5. LIFTING EMBEDMENTS SHALL BE INSTALLED IN ACCORDANCE WITH SECTION 6-02.3(25)L OF THE STANDARD SPECIFICATIONS.
6. CAUTION SHALL BE EXERCISED IN HANDLING AND PLACING GIRDERS. ALL GIRDERS SHALL BE CHECKED BY THE CONTRACTOR TO ENSURE THAT THEY ARE BRACED ADEQUATELY TO PREVENT TIPPING AND TO CONTROL LATERAL BENDING DURING SHIPPING. ONCE ERECTED, ALL GIRDERS SHALL BE BRACED LATERALLY TO PREVENT TIPPING UNTIL THE DIAPHRAGMS ARE CAST AND CURED.
7. FORMS FOR BEARING PAD RECESSES SHALL BE CONSTRUCTED AND FASTENED IN SUCH A MANNER AS TO NOT CAUSE DAMAGE TO THE GIRDER DURING THE STRAND RELEASE OPERATION.
8. TEMPORARY STRANDS SHALL BE EITHER PRETENSIONED OR POST-TENSIONED IN ACCORDANCE WITH SECTION 6-02.3(25)L OF THE STANDARD SPECIFICATIONS. IF PRETENSIONED, THESE TEMPORARY STRANDS SHALL BE UNBONDED OVER ALL BUT THE END 10'-0" OF THE GIRDER LENGTH. AS AN ALTERNATE, TEMPORARY STRANDS MAY BE POST-TENSIONED ON THE SAME DAY THE PRETENSIONING IS RELEASED INTO THE GIRDER.

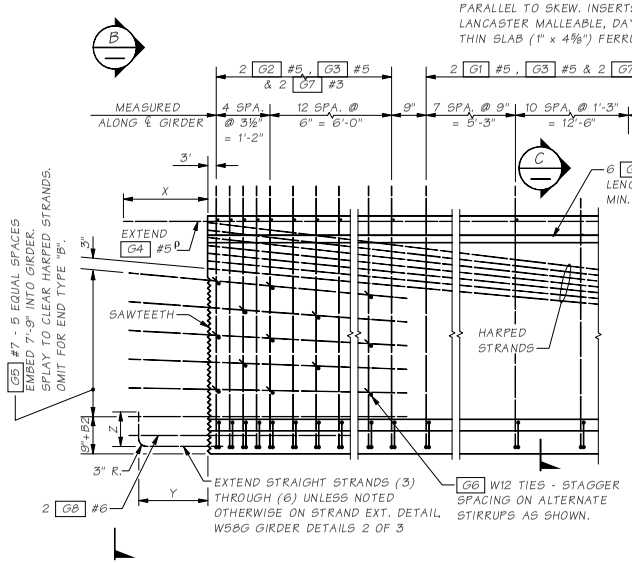

TYPICAL END ELEVATION

END TYPE C SHOWN, OTHER END TYPES SIMILAR

ρ FIELD BENDING REQUIRED TO OBTAIN 1½" CONCRETE COVER AT PAVEMENT SEAT.

(stirrup spacing shall be determined by the designer)

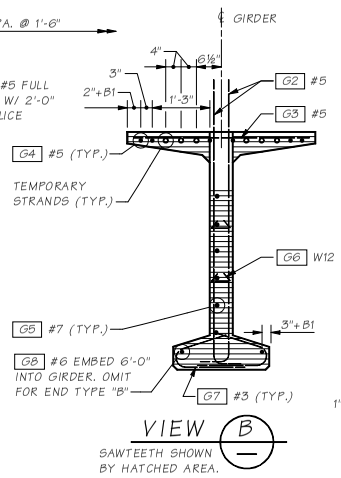

VIEW B

SAWTEETH SHOWN BY HATCHED AREA.

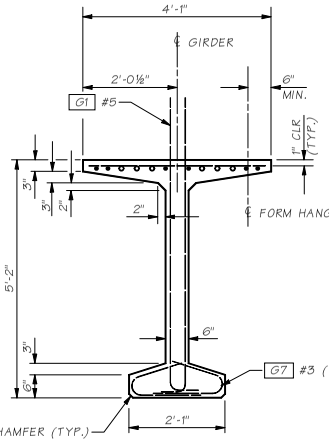

SECTION C

INTERMEDIATE DIAPHRAGM:
1/4 POINTS OF SPAN FOR SPAN LENGTHS 120'-0" TO 160'-0".
1/3 POINTS OF SPAN FOR SPAN LENGTHS 80'-0" TO 120'-0".
1/2 POINT OF SPAN FOR SPAN LENGTHS 40'-0" TO 80'-0".

Diaphragm Type	END TYPE	BEARING RECESS	X	Y	Z	SAWTEETH
End Diaph. on Girder	A	YES	1'-10"	1'-6"	9"	YES
"L" Abutment	B	YES	0"	0"	0"	NO
Hinge Diaph. on Interm. Pier	C	NO	1'-10"	1'-6"	9"	YES
Fixed Diaph. @ Interm. Pier	D	NO	1'-10"	ALT. 1 OR ALT. 2 STRAND EXTENSION		YES

FOR END TYPE "C"

ENDS AHEAD ON STATION
G5 BARS LEFT OF ℄
B1 = 0" (G4 , G8)
B2 = 0" (G5)
ENDS BACK ON STATION
G5 BARS RIGHT OF ℄
B1 = 1½"(G4 , G8)
B2 = 3" (G5)

MARK	LOCATION	SIZE	
G1	GIRDER STIRRUPS	5	
G2	GIRDER END STIRRUPS	5	
G3	GIRDER TOP FLANGE	5	STR.
G4	GIRDER LONGIT. FULL LENGTH	5	STR.
G5	GIRDER END LONGIT.	7	STR.
G6	GIRDER END TIES	W12δ	
G7β	GIRDER BOT. FLANGE TIES	3	
G8	GIRDER END LONGIT.	6	STR.
G9β	GIRDER BOT. FLANGE TIES	3	
G10β	GIRDER BOT. FLANGE TIES	3	

BENDING DIAGRAM (ALL DIMENSIONS ARE OUT TO OUT)
NOTE: FOR DIMENSION "A", SEE "GIRDER SCHEDULE"

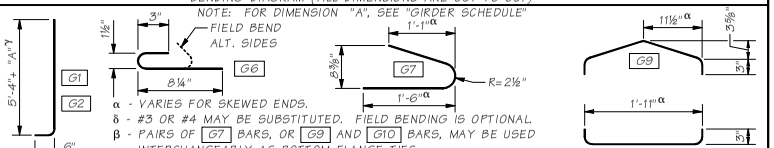

α - VARIES FOR SKEWED ENDS.
δ - #3 OR #4 MAY BE SUBSTITUTED. FIELD BENDING IS OPTIONAL.
β - PAIRS OF G7 BARS, OR G9 AND G10 BARS, MAY BE USED INTERCHANGEABLY AS BOTTOM FLANGE TIES.
γ - SHALL BE CHECKED FOR EFFECT OF VERTICAL CURVE.

Bridge Design Engr.	M:\STANDARDS\Girders\Bulb Tee Girder\W62BTG1.man				REGION NO.	STATE	FED. AID PROJ. NO.	SHEET NO.	TOTAL SHEETS
Supervisor					10	WASH.			
Designed By					JOB NUMBER				
Checked By									
Detailed By									
Bridge Projects Engr.									
Prelim. Plan By									
Architect/Specialist	DATE	REVISION	BY	APP'D					

BRIDGE AND STRUCTURES OFFICE

Washington State Department of Transportation

STANDARD PRESTRESSED CONCRETE GIRDERS

W62BTG GIRDER DETAILS 1 OF 3

BRIDGE SHEET NO. — SHEET — OF — SHEETS

SR — JOB NO. — SHEET

5.6-A15-1

Fri Feb 01 14:20:43 2008

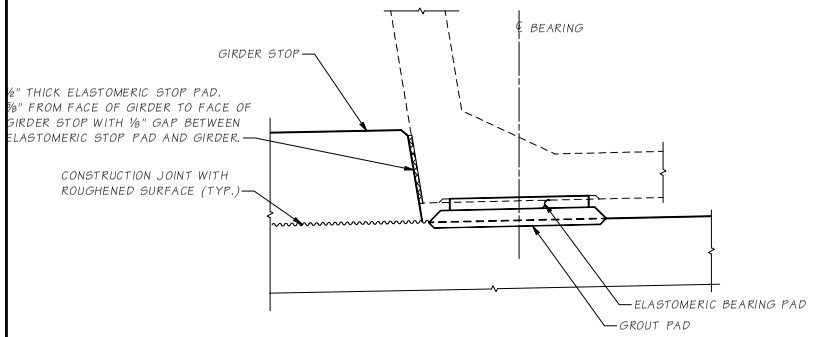

SECTION G

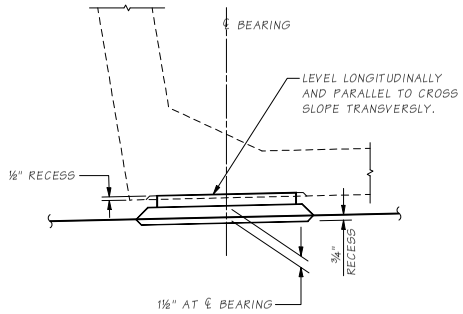

GROUT PAD ELEVATION

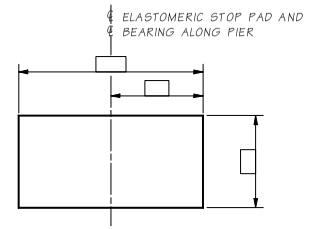

ELASTOMERIC STOP PAD

DUROMETER HARDNESS = 60

NOTES:

1. GIRDER STOPS SHALL BE CONSTRUCTED AFTER GIRDER PLACEMENT.
2. ELASTOMERIC STOP PADS SHALL BE CEMENTED TO GIRDER STOP WITH APPROVED ADHESIVE.

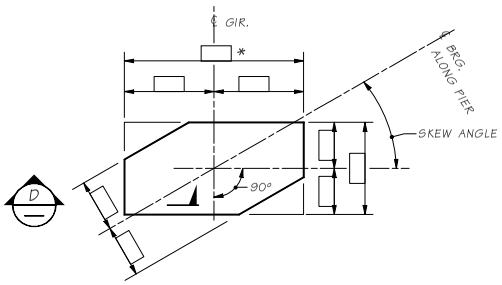

BEARING PAD

LAMINATED ELASTOMERIC BRIDGE PAD ☐ THICK (☐ SHIMS).

Skew angle shown at 30°.

* The edge of the bearing pad shall be set at 1" minimum to 6" maximum from the edge of the bottom flange.

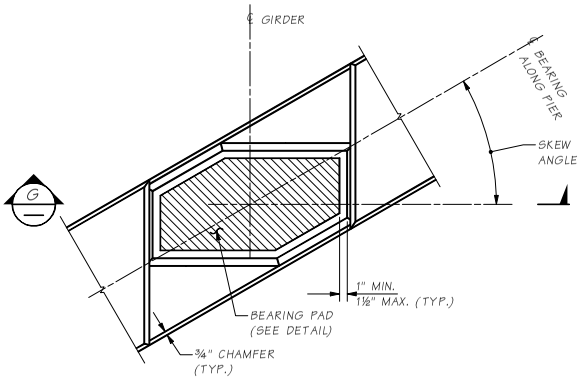

GROUT PAD DETAIL

Skew angle shown at 30°.

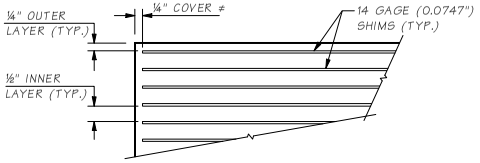

SECTION D

≠ ⅛" for pad thickness ≤ 3"
¼" for 3" < pad thickness ≤ 7"
½" for pad thickness > 7"

BEARING DESIGN TABLE	
SERVICE - I LIMIT STATE	
DEAD LOAD REACTION	KIPS
LIVE LOAD REACTION (W/O IMPACT)	KIPS
UNLOADED HEIGHT	IN.
LOADED HEIGHT (DL)	IN.
DUROMETER HARDNESS	60

Bridge Design Engr.	M:\STANDARDS\Girders\Trapezoidal Tubs\TRAPEZOIDAL TUB MISC DETAILS.MAN								
Supervisor					REGION NO.	STATE	FED. AID PROJ. NO.	SHEET NO.	TOTAL SHEETS
Designed By					10	WASH.			
Checked By					JOB NUMBER				
Detailed By									
Bridge Projects Engr.									
Prelim. Plan By									
Architect/Specialist	DATE	REVISION	BY	APP'D					

BRIDGE AND STRUCTURES OFFICE

Washington State Department of Transportation

STANDARD PRESTRESSED CONCRETE GIRDERS

PRESTRESSED TRAPEZOIDAL TUB GIRDER MISCELLANEOUS BEARING DETAILS

BRIDGE SHEET NO.

SHEET OF SHEETS

SR ____ JOB NO. ____ SHEET

5.6-A16-1

Fri Feb 01 14:28:46 2008

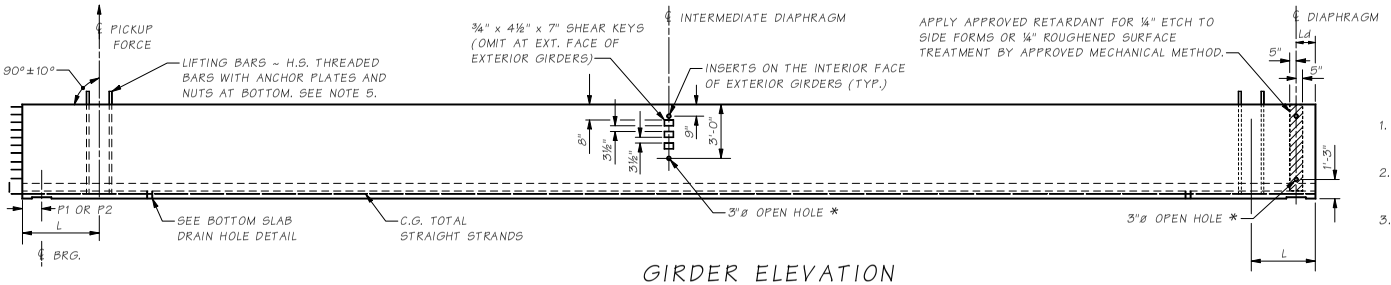

GIRDER ELEVATION

* OMIT HOLES AND PLACE INSERTS ON THE INTERIOR FACE OF EXTERIOR GIRDERS. PLACE HOLES AND INSERTS PARALLEL TO SKEW. INSERTS SHALL BE 1" BURKE HI-TENSILE, LANCASTER MALLEABLE, DAYTON-SUPERIOR F-62 FLARED THIN SLAB (1" x 4⅜") FERRULE OR APPROVED EQUAL. (TYP.)

END TYPE A

END TYPE B

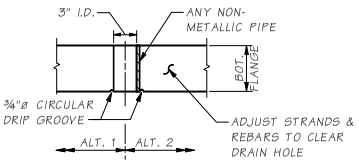

BOTTOM SLAB DRAIN HOLE DETAIL

NOTES:

1. PLAN LENGTH SHALL BE INCREASED AS NECESSARY TO COMPENSATE FOR SHORTENING DUE TO PRESTRESS AND SHRINKAGE.
2. ALL PRETENSIONED STRANDS SHALL BE [½"ø OR 0.6"ø] LOW RELAXATION STRANDS (AASHTO M203 GRADE 270.)
3. FOR END TYPES A, C AND D CUT ALL STRANDS FLUSH WITH THE GIRDER ENDS AND PAINT WITH AN APPROVED EPOXY RESIN, EXCEPT FOR EXTENDED STRANDS AS SHOWN. FOR END TYPE B CUT ALL STRANDS 1" BELOW CONCRETE SURFACE AND GROUT WITH AN APPROVED EPOXY GROUT.
4. THE TOP SURFACE OF THE GIRDER WEBS SHALL BE ROUGHENED IN ACCORDANCE WITH SECTION 6-02.3(25)H OF THE STANDARD SPECIFICATIONS.
5. LIFTING EMBEDMENTS SHALL BE INSTALLED IN ACCORDANCE WITH SECTION 6-02.3(25)L OF THE STANDARD SPECIFICATIONS.
6. CAUTION SHALL BE EXERCISED IN HANDLING AND PLACING GIRDERS. ALL GIRDERS SHALL BE CHECKED BY THE CONTRACTOR TO ENSURE THAT THEY ARE BRACED ADEQUATELY TO PREVENT TIPPING AND TO CONTROL LATERAL BENDING DURING SHIPPING.
7. FORMS FOR BEARING PAD RECESSES SHALL BE CONSTRUCTED AND FASTENED IN SUCH A MANNER AS TO NOT CAUSE DAMAGE TO THE GIRDER DURING THE STRAND RELEASE OPERATION.

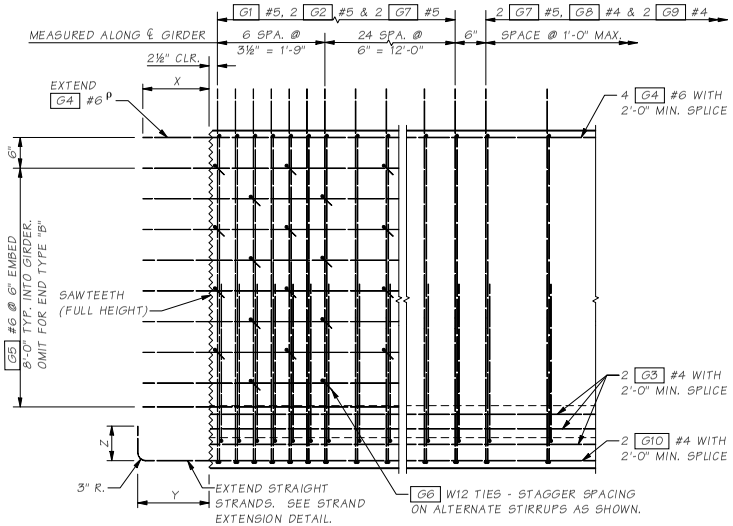

ρ FIELD BENDING REQUIRED TO OBTAIN 1½" CONCRETE COVER AT PAVEMENT SEAT.

TYPICAL END ELEVATION

END TYPE "C" SHOWN, OTHER END TYPES SIMILAR

Stirrup spacing shall be determined by the designer

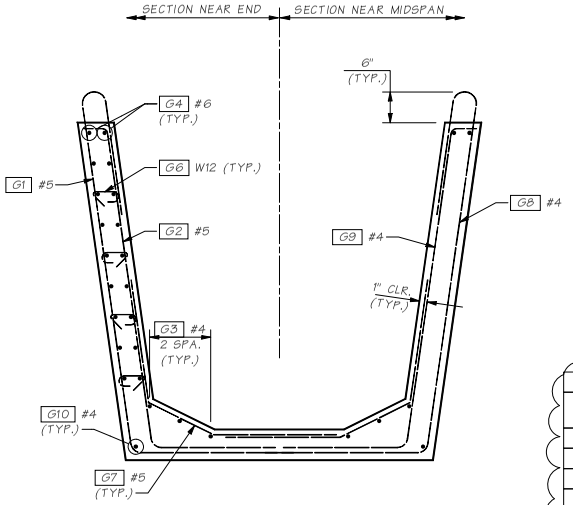

TYPICAL SECTION

¼ points of span for span lengths over 120'-0".
⅓ points of span for span lengths 80'-0" TO 120'-0".
Midpoint of span for span lengths 40'-0" TO 80'-0".

¼ points of span for span lengths over 120'-0".
⅓ points of span for span lengths 80'-0" TO 120'-0".
Midpoint of span for span lengths 40'-0" TO 80'-0".

Notes to designer

DIAPHRAGM TYPE	END TYPE	BEARING RECESS	X	Y	Z	SAWTEETH
End diaphragm on girder	A	YES	1'-10"	1'-6"	9"	YES
"L" Abutment	B	YES	0	0	0	NO
Hinge diaph. at interm. pier	C	NO	1'-10"	1'-6"	9"	YES
Fixed diaph. at interm. pier	D	NO	1'-10"	ALT. 1 OR ALT. 2 STRAND EXTEN.		YES
Multiple simple spans at intermediate pier	E	YES	0	0	0	NO

Bridge Design Engr.	M:\STANDARDS\Girders\Trapezoidal Tubs\TRAPEZOIDAL TUB 1.MAN				REGION NO.	STATE	FED. AID PROJ. NO.	SHEET NO.	TOTAL SHEETS
Supervisor					10	WASH.			
Designed By					JOB NUMBER				
Checked By									
Detailed By									
Bridge Projects Engr.									
Prelim. Plan By									
Architect/Specialist	DATE	REVISION	BY	APP'D					

BRIDGE AND STRUCTURES OFFICE

Washington State Department of Transportation

STANDARD PRESTRESSED CONCRETE GIRDERS

TUB GIRDER DETAILS 1 OF 3

BRIDGE SHEET NO.
SHEET OF SHEETS

SR JOB NO. SHEET 5.6-A16-2

Fri Feb 01 14:28:50 2008

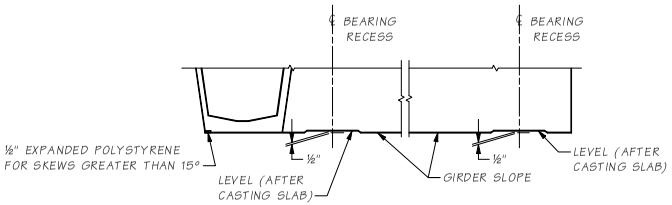

ELEVATION

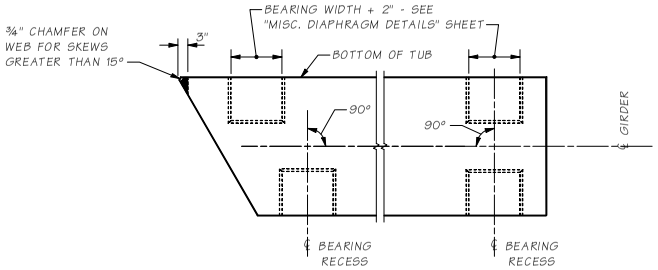

PLAN

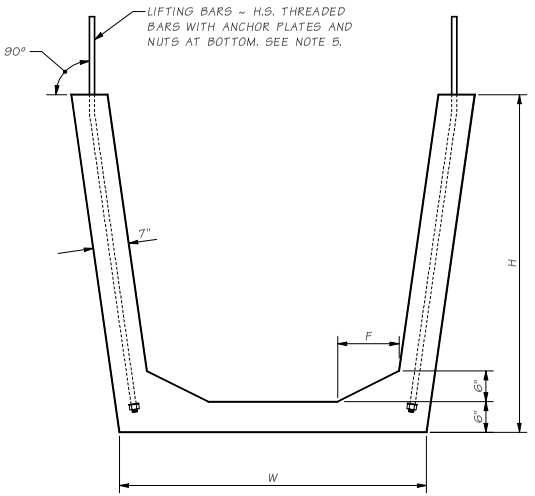

TYPICAL SECTION

GIRDER	F	H	W
U54G4	1'-0"	4'-6"	4'-0"
U54G5	1'-0"	4'-6"	5'-0"
U66G4	1'-6"	5'-6"	4'-0"
U66G5	1'-6"	5'-6"	5'-0"

BOTTOM OF TUB SPALL PROTECTION

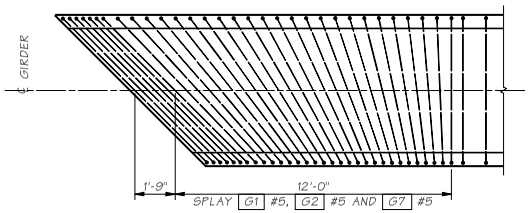

TRANSVERSE REINFORCING AT SKEWED ENDS

ONLY TRANSVERSE REINFORCING SHOWN

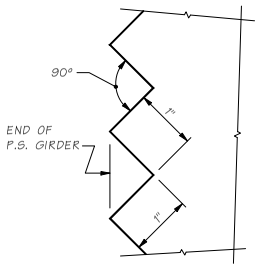

SAWTOOTH DETAILS

SAWTEETH ARE FULL WIDTH. USE SAWTOOTH KEYS FROM BOTTOM OF BOTTOM FLANGE TO BOTTOM OF LOWEST HARPED STRAND AS WELL AS TOP FLANGE ADJACENT TO HARPED STRANDS AS SHOWN ON "TYPICAL END ELEVATION" THIS SHEET.

MARK	LOCATION	SIZE	U	W	X	BENDING DIAGRAM (ALL DIMENSIONS ARE OUT TO OUT)
G1	STIRRUPS, OUTSIDE WEB	5				NOTE: FOR DIMENSION "A", SEE "GIRDER SCHEDULE"
G2	STIRRUPS, INSIDE WEB	5				
G3	LONGITUDINAL BOTTOM FLANGE	4				STR.
G4	LONGITUDINAL TOP	6				STR.
G5	LONGITUDINAL WEB	6				STR.
G6	WEB TIE	W12 δ				
G7	BOTTOM FLANGE	5				
G8	STIRRUP, OUTSIDE WEB	4				
G9	STIRRUP, INSIDE WEB	4				
G10	LONGITUDINAL BOTTOM	4				STR.

α - VARIES FOR SKEWED ENDS.
δ - #3 OR #4 MAY BE SUBSTITUTED. FIELD BENDING IS OPTIONAL.
γ - SHALL BE CHECKED FOR EFFECT OF VERTICAL CURVE.

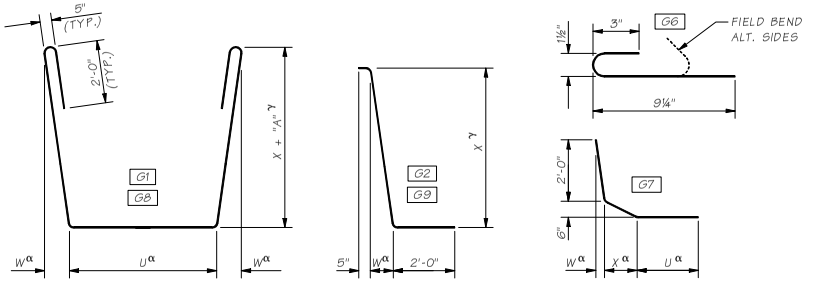

Bridge Design Engr.	M:\STANDARDS\Girders\Trapezoidal Tubs\TRAPEZOIDAL TUB 2.MAN								
Supervisor					REGION NO.	STATE	FED. AID PROJ. NO.	SHEET NO.	TOTAL SHEETS
Designed By					10	WASH.			
Checked By					JOB NUMBER				
Detailed By									
Bridge Projects Engr.									
Prelim. Plan By									
Architect/Specialist	DATE	REVISION	BY	APP'D					

BRIDGE AND STRUCTURES OFFICE

Washington State Department of Transportation

STANDARD PRESTRESSED CONCRETE GIRDERS

PRESTRESSED TRAPEZOIDAL TUB GIRDER DETAILS 2 OF 3

BRIDGE SHEET NO. — SHEET — OF — SHEETS

SR — JOB NO. 5.6-A16-3 — SHEET 2

Fri Feb 01 14:28:55 2008

GIRDER SCHEDULE

DIMENSION "A" AT ℄ BEARINGS =											BASED ON GIRDER DEFLECTION = "D" AT TIME OF SLAB PLACEMENT (120 DAYS)									
SPAN	GIRDER	END 1 TYPE	END 2 TYPE	L	LL	LT	θ1 (DEG.)	θ2 (DEG.)	P1	P2	PLAN LENGTH (ALONG GIRDER GRADE)	MIN. CONC. COMP. STRENGTH		NO. OF STRANDS	JACKING FORCE (KIPS)	LOCATION OF C.G. STRANDS	C	D @ 40 DAYS	D @ 120 DAYS	Ld
												AT FINAL FC (KSI)	AT RELEASE FCI (KSI)			E				
-	-	-	-	-	-	-	-	-	-	-	-	-	-	-	-	-	-	-	-	-

NOTE:
Dimensions shall be shown in imperial units to the nearest 1/8th inch.

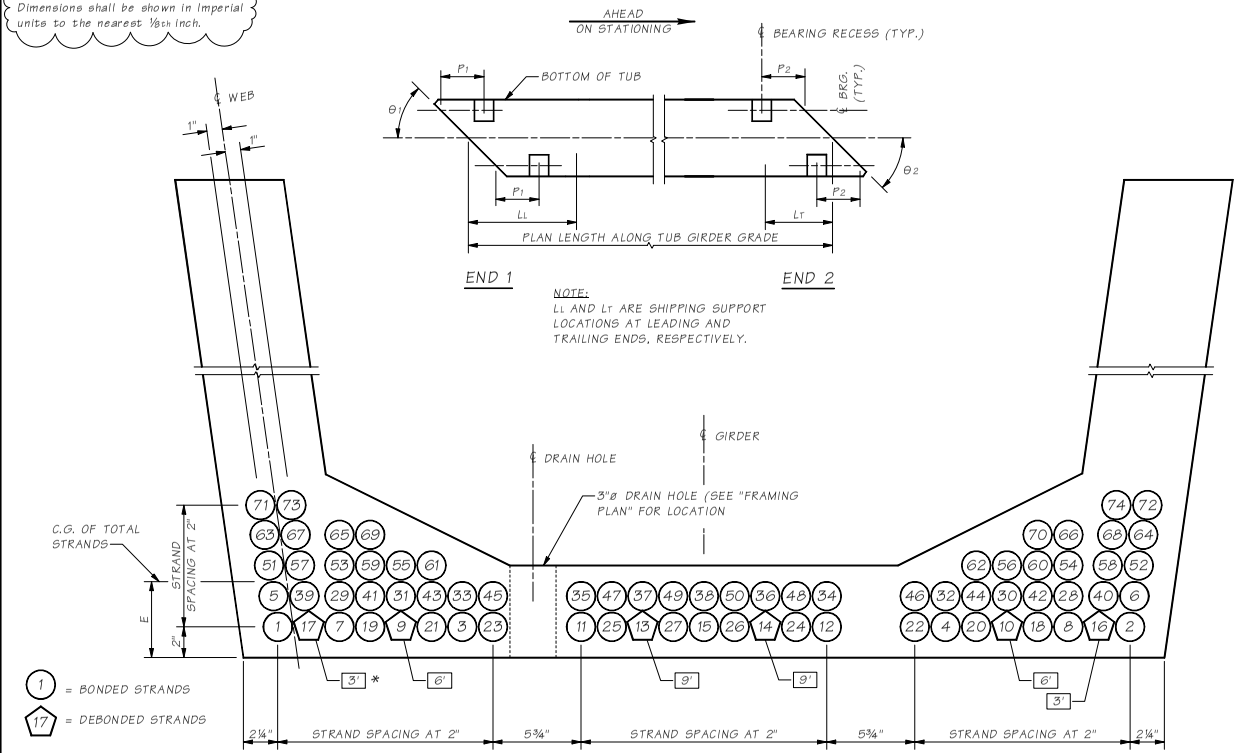

1 = BONDED STRANDS

17 = DEBONDED STRANDS

* DISTANCE INDICATES LENGTH THAT EACH END OF STRAND IS TO BE SLEEVED TO PREVENT BOND. (TYP.)

Debonding to be determined by the designer

STRAND PATTERN

STRAND STRESSING SEQUENCE SHALL BE AS SHOWN (1), (2) ETC.

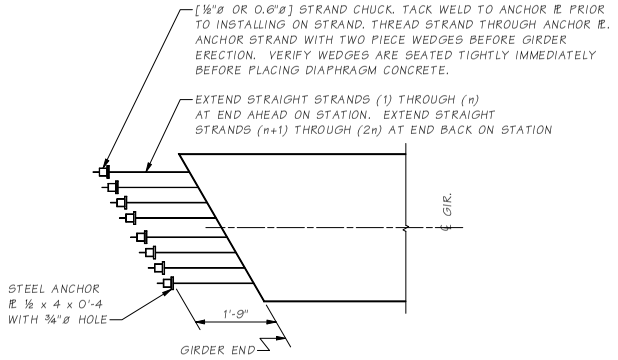

ALTERNATE #1

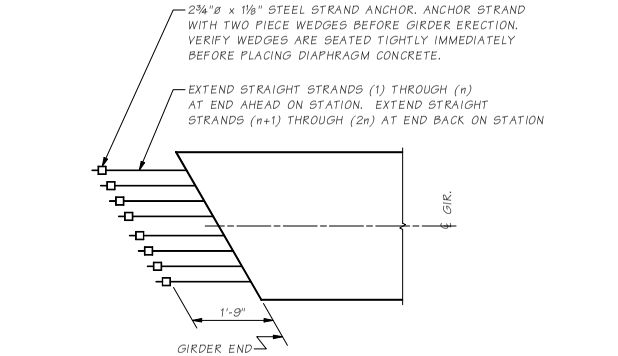

ALTERNATE #2

STRAND EXTENSION DETAIL

TOTAL NUMBER OF EXTENDED STRANDS = ☐

Number of extended strands shall be determined by the designer.

Bridge Design Engr.	M:\STANDARDS\Girders\Trapezoidal Tubs\TRAPEZOIDAL TUB 3.MAN				REGION NO.	STATE	FED. AID PROJ. NO.	SHEET NO.	TOTAL SHEETS
Supervisor					10	WASH.			
Designed By					JOB NUMBER				
Checked By									
Detailed By									
Bridge Projects Engr.									
Prelim. Plan By									
Architect/Specialist	DATE	REVISION	BY	APP'D					

BRIDGE AND STRUCTURES OFFICE

Washington State Department of Transportation

STANDARD PRESTRESSED CONCRETE GIRDERS

TUB GIRDER DETAILS 3 OF 3

BRIDGE SHEET NO. | SHEET | OF | SHEETS

SR | JOB NO. | SHEET 2

5.6-A16-4

Fri Feb 01 14:28:59 2008

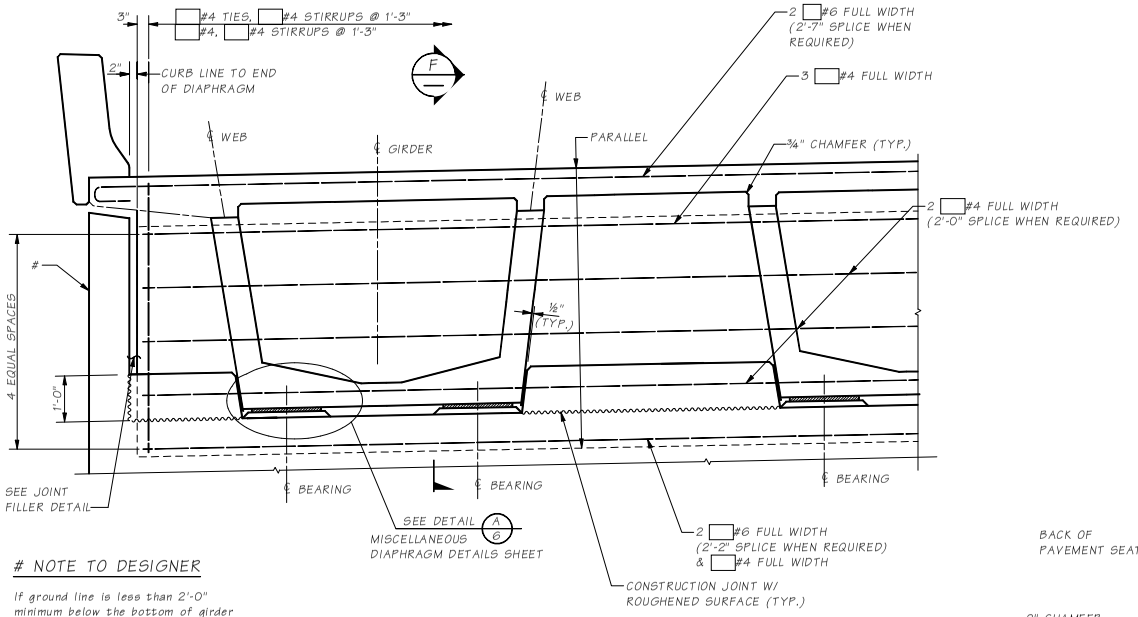

 # NOTE TO DESIGNER

If ground line is less than 2'-0" minimum below the bottom of girder at front face of abutment a curtain wall shall be provided.

TYPICAL END TYPE "A" DIAPHRAGM AT END PIERS

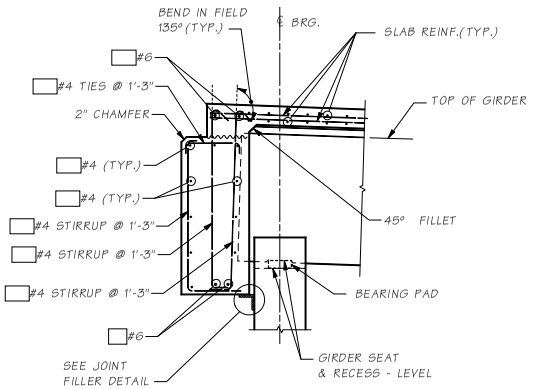

SECTION F

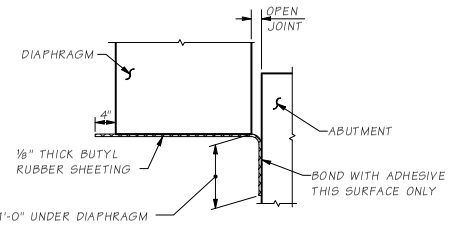

ELEVATION BUTYL RUBBER @ DIAPHRAGM

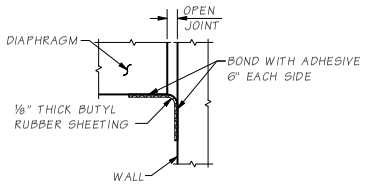

PLAN VIEW BUTYL RUBBER @ VERTICAL JOINTS

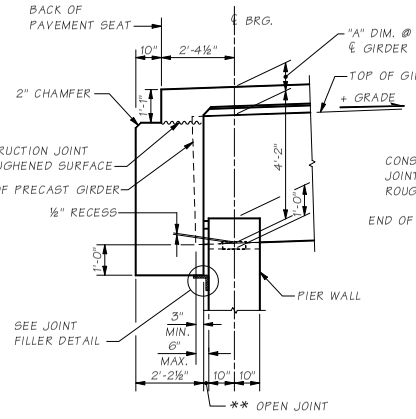

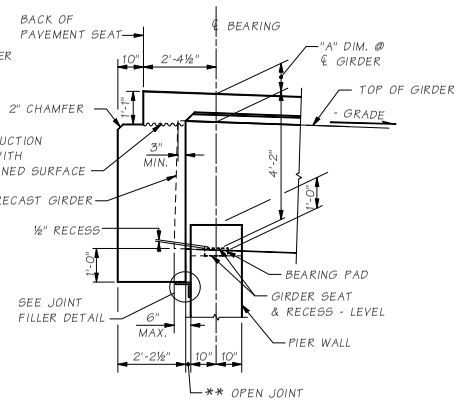

END DIAPHRAGM GEOMETRY

SECTIONS THROUGH END DIAPHRAGMS AT END PIERS
SEE "GIRDER DETAILS" SHEET FOR DIMENSION "A".
ALL LONGITUDINAL DIMENSIONS ARE NORMAL TO SKEW.

NOTE:

1. GIRDERS SHALL BE HELD RIGIDLY IN PLACE WHEN DIAPHRAGMS ARE PLACED.
2. REINFORCING BAR SHALL BE THREADED THROUGH HOLES IN GIRDERS PRIOR TO PLACING OF EXTERIOR GIRDERS. SEE PLANS FOR "TRAFFIC BARRIER" DIMENSIONS AND LOCATION. SEE "GIRDER DETAILS" SHEET FOR DIMENSION "A".
3. END DIAPHRAGM MAY BE CAST ON GRADE. IF SO, THE UPPER LEG OF THE JOINT FILLER SHALL FORM THE BOTTOM FACE FULL WIDTH.
4. JOINT FILLER TYPE 1 SHALL BE USED TO COVER ALL VERTICAL END DIAPHRAGM JOINTS. EITHER JOINT FILLER TYPE 1 OR JOINT FILLER TYPE 2 SHALL BE USED TO COVER ALL HORIZONTAL END DIAPHRAGM JOINTS.

BRIDGE LENGTH	JOINT
L≤200	** = 1.5 IN.
200<L≤300	** = 2.0 IN.
300<L≤400	** = 2.5 IN.
L>400	SPECIAL DESIGN

Bridge Design Engr.	M:\STANDARDS\Girders\Trapezoidal Tubs\TRAPEZOIDAL TUB END_DIA_ON_TUB.MAN				REGION NO.	STATE	FED. AID PROJ. NO.	SHEET NO.	TOTAL SHEETS
Supervisor					10	WASH.			
Designed By					JOB NUMBER				
Checked By									
Detailed By									
Bridge Projects Engr.									
Prelim. Plan By									
Architect/Specialist	DATE	REVISION		BY	APP'D				

BRIDGE AND STRUCTURES OFFICE

Washington State Department of Transportation

STANDARD PRESTRESSED CONCRETE GIRDERS

PRESTRESSED TRAPEZOIDAL TUB GIRDER END DIAPHRAGM ON GIRDER DETAILS

BRIDGE SHEET NO. | SHEET | OF | SHEETS

SR | JOB NO. | SHEET

5.6-A16-5

Fri Feb 01 14:29:06 2008

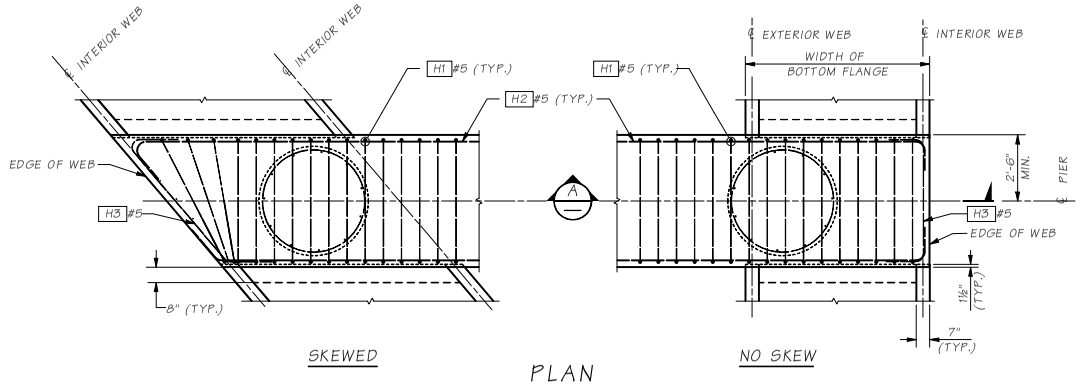

PLAN

FOR EXTENDED STRAND DETAIL SEE GIRDER SHEET 3.

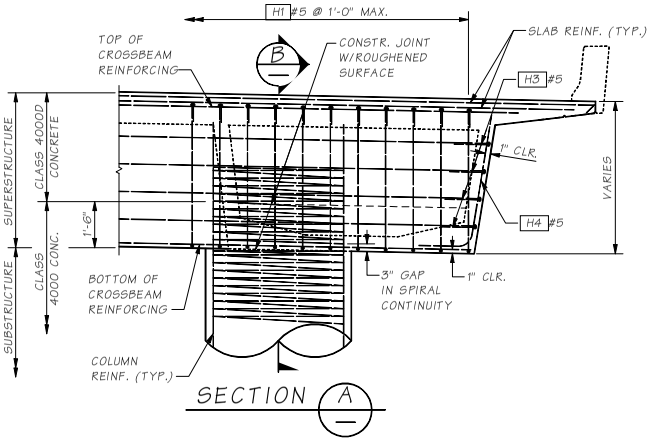

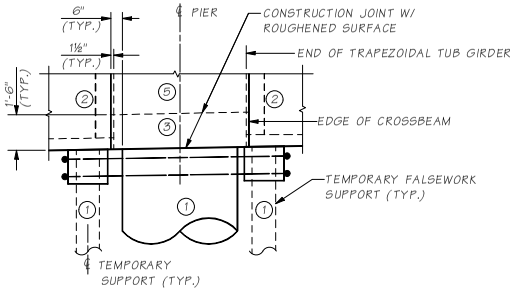

TEMPORARY SUPPORT DETAIL

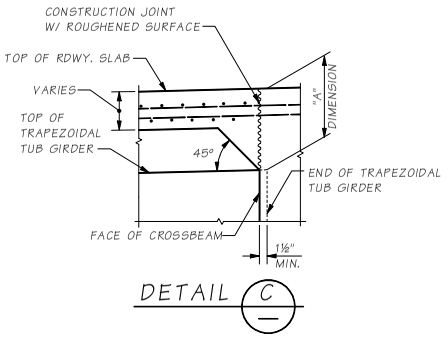

DETAIL C

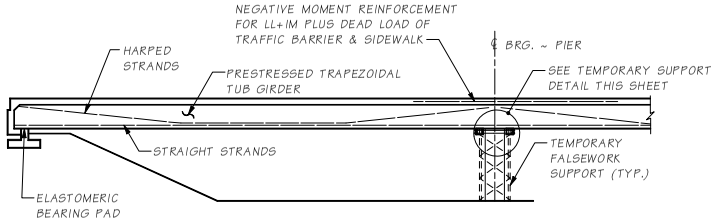

ELEVATION

CONSTRUCTION SEQUENCE

1. COLUMN & TEMP. SUPPORT
2. PLACE GIRDER ON TEMPORARY SUPPORT
3. CAST DIAPHRAGM STAGE 1
4. CAST ROADWAY SLAB
5. COMPLETE DIAPHRAGM
6. REMOVE TEMPORARY SUPPORT

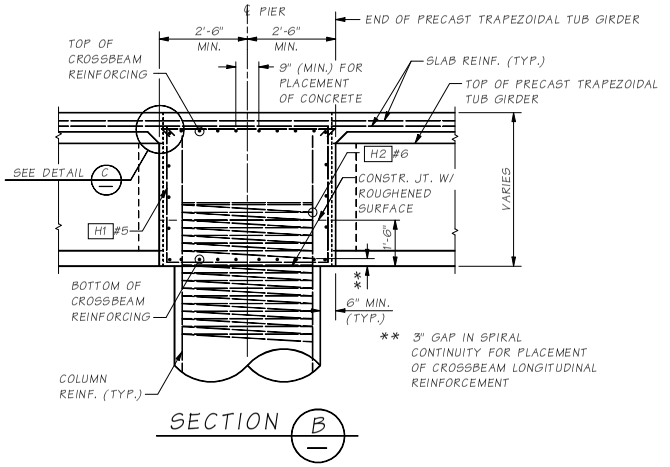

SECTION B

Bridge Design Engr.	M:\STANDARDS\Girders\Trapezoidal Tubs\TRAPEZOIDAL TUB RAISED CROSSBEAM.MAN				REGION NO.	STATE	FED. AID PROJ. NO.	SHEET NO.	TOTAL SHEETS	BRIDGE AND STRUCTURES OFFICE
Supervisor					10	WASH.				Washington State Department of Transportation
Designed By					JOB NUMBER					STANDARD PRESTRESSED CONCRETE GIRDERS
Checked By										PRESTRESSED TRAPEZOIDAL TUB GIRDER RAISED CROSSBEAM DETAILS
Detailed By										BRIDGE SHEET NO. / SHEET / OF / SHEETS
Bridge Projects Engr.										
Prelim. Plan By										
Architect/Specialist	DATE	REVISION	BY	APP'D						

SR JOB NO. SHEET
5.6-A16-6

Fri Feb 01 14:29:14 2008

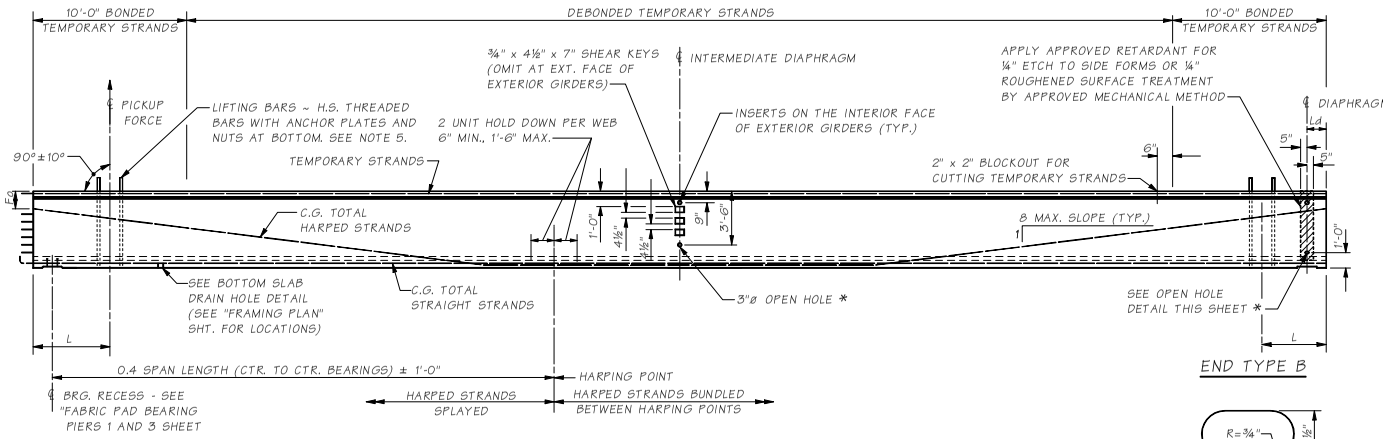

END TYPE A

END TYPE B

GIRDER ELEVATION

* OMIT HOLES AND PLACE INSERTS ON THE INTERIOR FACE OF EXTERIOR WEB OF EXTERIOR GIRDERS. PLACE HOLES AND INSERTS PARALLEL TO SKEW. INSERTS SHALL BE 1" BURKE HI-TENSILE, LANCASTER MALLEABLE, DAYTON-SUPERIOR F-62 FLARED THIN SLAB (1" x 4⅜") FERRULE OR APPROVED EQUAL. (TYP.)

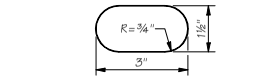

OPEN HOLE DETAIL

BOTTOM HOLE AT END TYPE "B" ONLY

NOTES:

1. PLAN LENGTH SHALL BE INCREASED AS NECESSARY TO COMPENSATE FOR SHORTENING DUE TO PRESTRESS AND SHRINKAGE.
2. ALL PRETENSIONED STRANDS SHALL BE [½"ø OR 0.6"ø] LOW RELAXATION STRANDS (AASHTO M203 GRADE 270.)
3. FOR END TYPES A, C AND D CUT ALL STRANDS FLUSH WITH THE GIRDER ENDS AND PAINT WITH AN APPROVED EPOXY RESIN, EXCEPT FOR EXTENDED STRANDS AS SHOWN. FOR END TYPE B CUT ALL STRANDS 1" BELOW CONCRETE SURFACE AND GROUT WITH AN APPROVED EPOXY GROUT.
4. THE TOP SURFACE OF THE GIRDER WEBS SHALL BE ROUGHENED IN ACCORDANCE WITH SECTION 6-02.3(25)H OF THE STANDARD SPECIFICATIONS.
5. LIFTING EMBEDMENTS SHALL BE INSTALLED IN ACCORDANCE WITH SECTION 6-02.3(25)L OF THE STANDARD SPECIFICATIONS.
6. CAUTION SHALL BE EXERCISED IN HANDLING AND PLACING GIRDERS. ALL GIRDERS SHALL BE CHECKED BY THE CONTRACTOR TO ENSURE THAT THEY ARE BRACED ADEQUATELY TO PREVENT TIPPING AND TO CONTROL LATERAL BENDING DURING SHIPPING.
7. FORMS FOR BEARING PAD RECESSES SHALL BE CONSTRUCTED AND FASTENED IN SUCH A MANNER AS TO NOT CAUSE DAMAGE TO THE GIRDER DURING THE STRAND RELEASE OPERATION.
8. TEMPORARY STRANDS ARE PRETENSIONED OR POST-TENSIONED. IF PRETENSIONED, THESE TEMPORARY STRANDS SHALL BE DEBONDED OVER ALL BUT THE END 10'-0" OF THE GIRDER LENGTH. AS AN ALTERNATE, TEMPORARY STRANDS MAY BE POST-TENSIONED BEFORE THE GIRDER IS LIFTED FROM THE FORM. TEMPORARY STRANDS SHALL BE CUT BEFORE THE INTERMEDIATE DIAPHRAGMS ARE CAST. PATCH RECESS WITH CEMENTITIOUS GROUT; DO NOT ALLOW MOISTURE IN RECESS PRIOR TO GROUTING.
9. P.C. GIRDER ENDS SHALL BE PLUMB IN THE FINAL GIRDER'S ERECTED POSITION.

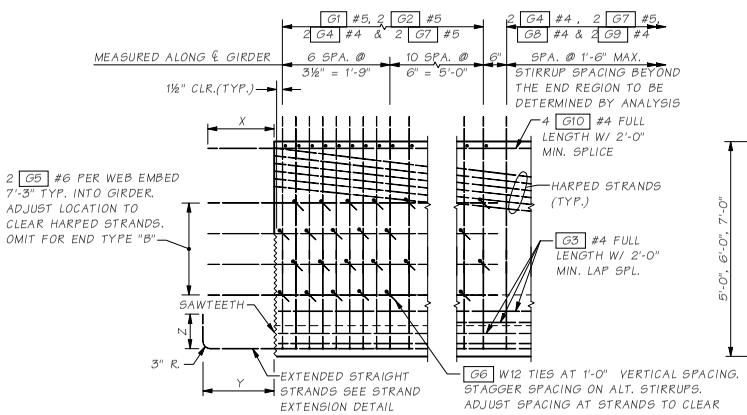

TYPICAL END ELEVATION

END TYPE C SHOWN - OTHER END TYPES SIMILAR.

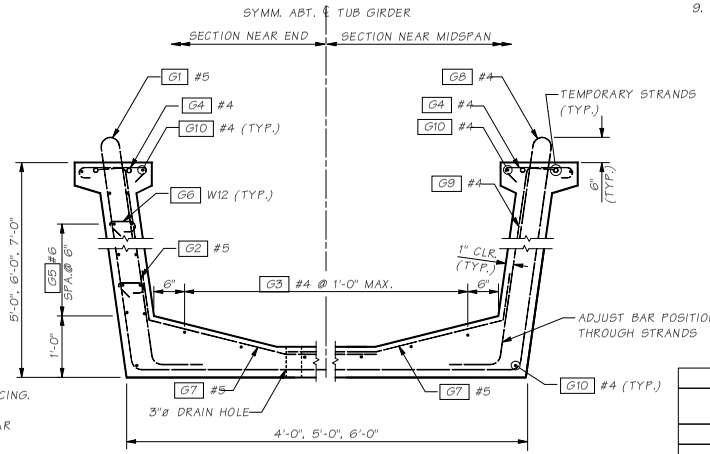

SECTION ~ REINFORCEMENT

FOR DRAIN HOLE LOCATIONS SEE "FRAMING PLAN" SHEET.

¼ points of span for span lengths over 120'-0".
⅓ points of span for span lengths 80'-0" TO 120'-0".
Midpoint of span for span lengths 40'-0" TO 80'-0".

Notes to designer

DIAPHRAGM TYPE	END TYPE	BEARING RECESS	X	Y	Z	SAWTEETH
End diaph. on girder	A	YES	1'-10"	1'-6"	9"	YES
"L" Abutment	B	YES	0	0	0	NO
Hinge diaph.on interm. pier	C	NO	1'-10"	1'-6"	9"	YES
Fixed diaph.@ interm. pier	D	NO	1'-10"	ALT. 1 OR ALT. 2 STRAND EXTEN.		YES
Mult. simple spans @ interm. pier	E	YES	0	0	0	NO

Bridge Design Engr.	M:\STANDARDS\Girders\Trapezoidal Tubs\SIP TRAPEZOIDAL TUB 1.MAN								
Supervisor					REGION NO.	STATE	FED. AID PROJ. NO.	SHEET NO.	TOTAL SHEETS
Designed By					10	WASH.			
Checked By					JOB NUMBER				
Detailed By									
Bridge Projects Engr.									
Prelim. Plan By									
Architect/Specialist	DATE	REVISION	BY	APP'D					

BRIDGE AND STRUCTURES OFFICE

Washington State Department of Transportation

STANDARD PRESTRESSED CONCRETE GIRDERS

TRAPEZOIDAL TUB S-I-P DECK PANEL GIRDER DETAILS 1 OF 4

BRIDGE SHEET NO.

SHEET OF SHEETS

SR JOB NO. 5.6-A17-1 SHEET

Fri Feb 01 14:40:24 2008

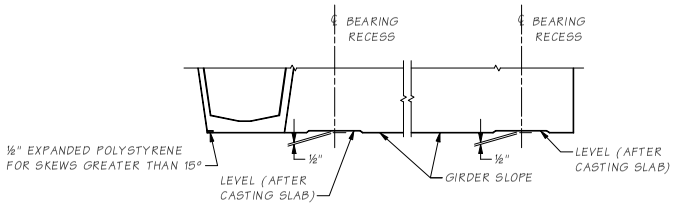

ELEVATION

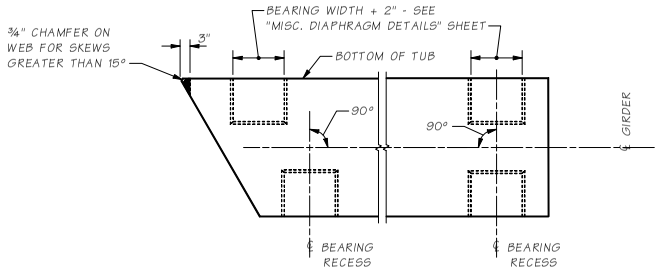

PLAN

BOTTOM OF TUB SPALL PROTECTION

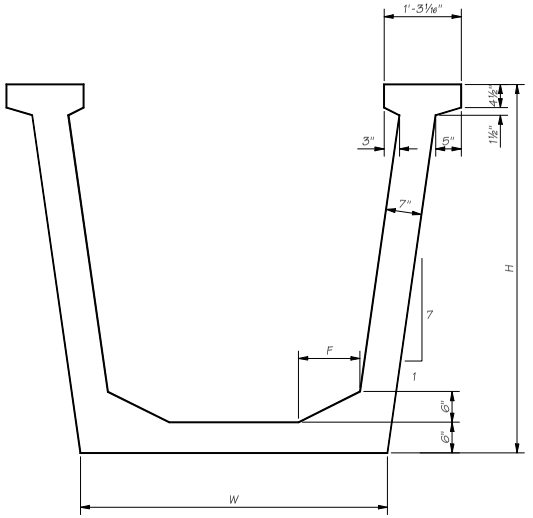

TYPICAL SECTION

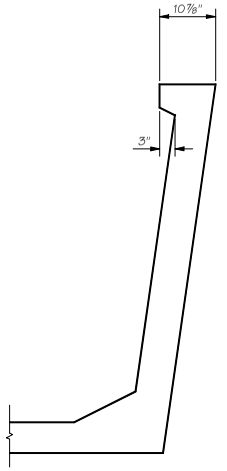

TYPICAL SECTION
EXTERIOR GIRDER

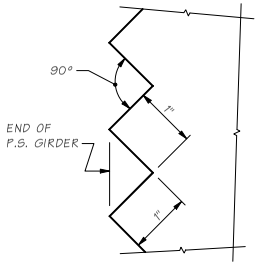

SAWTOOTH DETAILS

SAWTEETH ARE FULL WIDTH. USE SAWTOOTH KEYS FROM BOTTOM OF BOTTOM FLANGE TO BOTTOM OF LOWEST HARPED STRAND AS WELL AS TOP FLANGE ADJACENT TO HARPED STRANDS AS SHOWN ON "TYPICAL END ELEVATION" THIS SHEET.

BENDING DIAGRAM

MARK	LOCATION	SIZE	U	W	X	ALL DIMENSIONS ARE OUT TO OUT
G1	STIRRUPS, OUTSIDE WEB	5				NOTE: FOR DIMENSION "A", SEE "GIRDER SCHEDULE"
G2	STIRRUPS, INSIDE WEB	5				
G3	LONGITUDINAL BOTTOM FLANGE	4				STR.
G4	TOP WEB TIE	4				
G5	LONGITUDINAL WEB	6				STR.
G6	WEB TIE	W12δ				
G7	TRANSVERSE TIE	5				
G8	STIRRUPS, OUTSIDE WEB	4				
G9	STIRRUPS, INSIDE WEB	4				
G10	LONGITUDINAL TOP FLANGE	4				STR.

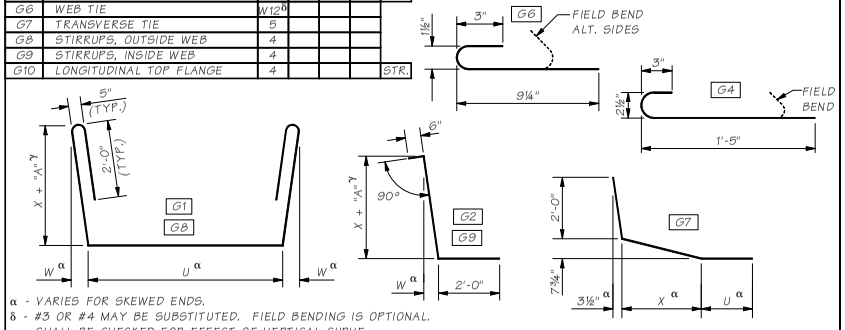

α - VARIES FOR SKEWED ENDS.
δ - #3 OR #4 MAY BE SUBSTITUTED. FIELD BENDING IS OPTIONAL.
γ - SHALL BE CHECKED FOR EFFECT OF VERTICAL CURVE.

Bridge Design Engr.	M:\STANDARDS\Girders\Trapezoidal Tubs\SIP TRAPEZOIDAL TUB 2.MAN				REGION NO.	STATE	FED. AID PROJ. NO.	SHEET NO.	TOTAL SHEETS
Supervisor					10	WASH.			
Designed By					JOB NUMBER				
Checked By									
Detailed By									
Bridge Projects Engr.									
Prelim. Plan By									
Architect/Specialist	DATE	REVISION	BY	APP'D					

Fri Feb 01 14:40:34 2008

BRIDGE AND STRUCTURES OFFICE

Washington State Department of Transportation

STANDARD PRESTRESSED CONCRETE GIRDERS

TRAPEZOIDAL TUB S-I-P DECK
PANEL GIRDER - DETAILS 2 OF 4

BRIDGE SHEET NO.

SHEET OF SHEETS

SR JOB NO. SHEET

5.6-A17-2

TEMPORARY STRAND CUTTING SEQUENCE

1. ERECT AND BRACE GIRDERS.
2. REMOVE EXPANDED POLYSTYRENE IN 2" X 2" RECESSES IN TOP FLANGE OF GIRDERS.
3. CUT STRAND AND PLASTIC SLEEVE IN 2" X 2" RECESS.
4. REMOVE ALL MOISTURE IN RECESS PRIOR TO FILLING RECESS WITH GROUT.
5. CAST INTERMEDIATE & END DIAPHRAGMS.
6. PLACE DECK CONCRETE.
7. SEE SHEET W83G GIRDER DETAILS 3 OF 3 FOR 2" RECESS BLOCKOUT DETAILS.

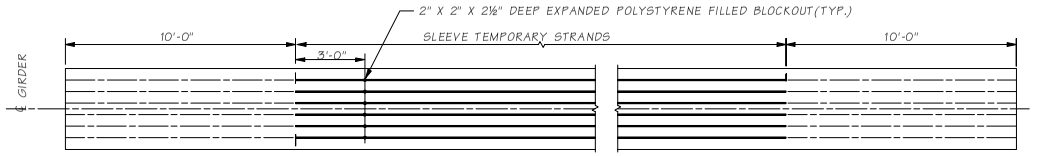

PLAN VIEW OF TEMPORARY STRANDS

Bridge Design Engr.	M:\STANDARDS\Girders\Trapezoidal Tubs\SIP TRAPEZOIDAL TUB 3.MAN				REGION NO.	STATE	FED. AID PROJ. NO.	SHEET NO.	TOTAL SHEETS	BRIDGE AND STRUCTURES OFFICE
Supervisor					10	WASH.				Washington State Department of Transportation
Designed By					JOB NUMBER					STANDARD PRESTRESSED CONCRETE GIRDERS
Checked By										TRAPEZOIDAL TUB S-I-P DECK PANEL GIRDER - DETAILS 3 OF 4
Detailed By										BRIDGE SHEET NO.
Bridge Projects Engr.										SHEET OF SHEETS
Prelim. Plan By										
Architect/Specialist	DATE	REVISION	BY	APP'D						

Fri Feb 01 14:40:29 2008

SR JOB NO. SHEET

GIRDER SCHEDULE

DIMENSION "A" AT ℄ BEARINGS =							BASED ON GIRDER DEFLECTION = "D" AT TIME OF SLAB PLACEMENT (120 DAYS)															
SPAN	GIRDER	END 1 TYPE	END 2 TYPE	L	θ_1	θ_2	PLAN LENGTH (ALONG GIRDER GRADE)	MIN. CONC. COMPR. STRENGTH		HARPED		STRAIGHT		TEMPORARY		LOCATION OF C.G. STRANDS				C	D @ 40 DAYS	D @ 120 DAYS	Ld
								@ FINAL F'C (KSI)	@ RELEASE F'CI (KSI)	NO. OF STRANDS	JACKING FORCE (KIPS)	NO. OF STRANDS	JACKING FORCE (KIPS)	NO. OF STRANDS	JACKING FORCE (KIPS)	E	F℄	Fb	Fo				
-	-	-	-	-	-°	-°	--'- -"	-	-	-	-	-	-	-	-	-	-	-	-	-	-	-	-

NOTE:
Dimensions shall be shown in Imperial units to the nearest 1/8th inch.

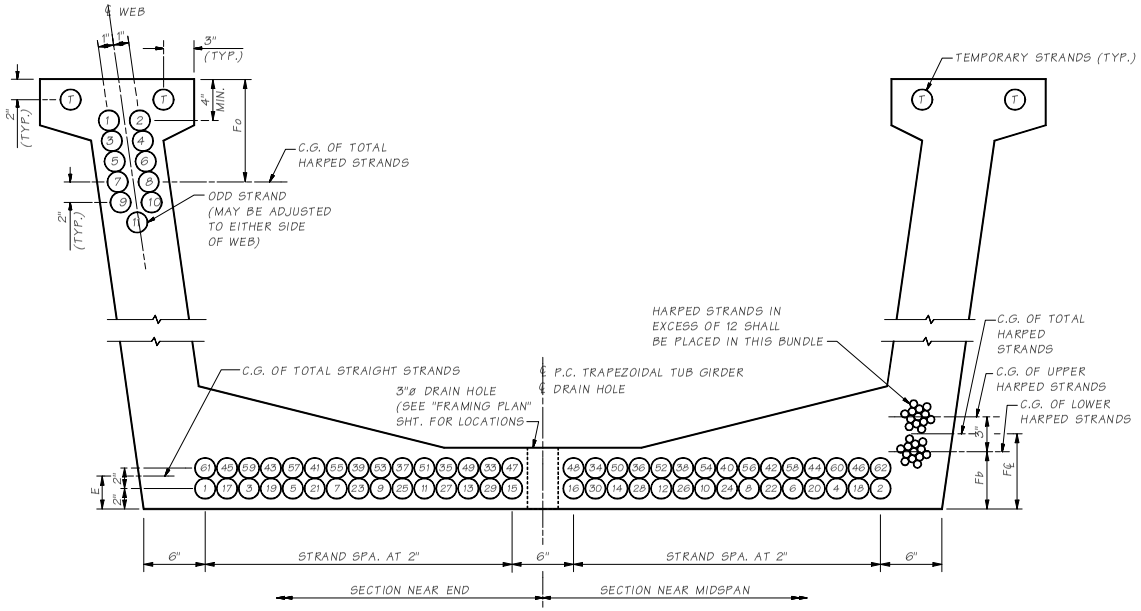

STRAND PATTERN

STRAND LOCATION SEQUENCE SHALL BE AS SHOWN 1 ◯ 2 (E) ℄.

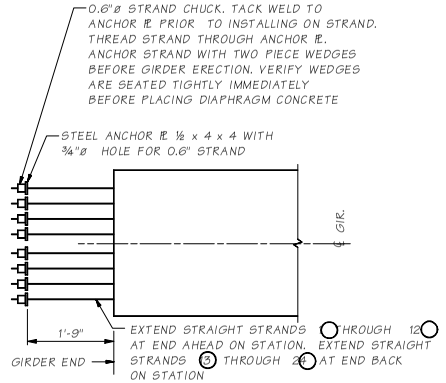

ALTERNATE # 1

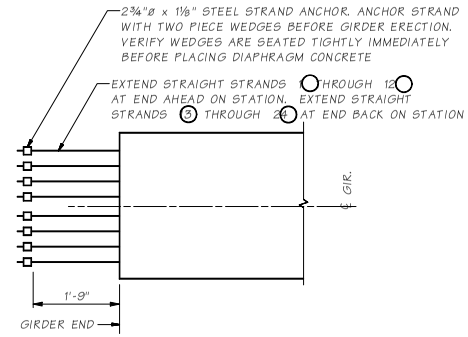

ALTERNATE # 2

STRAND EXTENSION DETAIL FOR END TYPE D

NOT ALL EXTENDED STRANDS ARE SHOWN

Bridge Design Engr:	M:\STANDARDS\Girders\Trapezoidal Tubs\SIP TRAPEZOIDAL TUB 4.MAN								
Supervisor					REGION NO.	STATE	FED. AID PROJ. NO.	SHEET NO.	TOTAL SHEETS
Designed By					10	WASH.			
Checked By					JOB NUMBER				
Detailed By									
Bridge Projects Engr.									
Prelim. Plan By									
Architect/Specialist	DATE	REVISION	BY	APP'D					

Fri Feb 01 14:40:38 2008

BRIDGE AND STRUCTURES OFFICE

Washington State Department of Transportation

STANDARD PRESTRESSED CONCRETE GIRDERS

TRAPEZOIDAL TUB S-I-P DECK
PANEL GIRDER - DETAILS 4 OF 4

BRIDGE SHEET NO.

SHEET OF SHEETS

SR NO. JOB NO. SHEET

5.6-A17-4

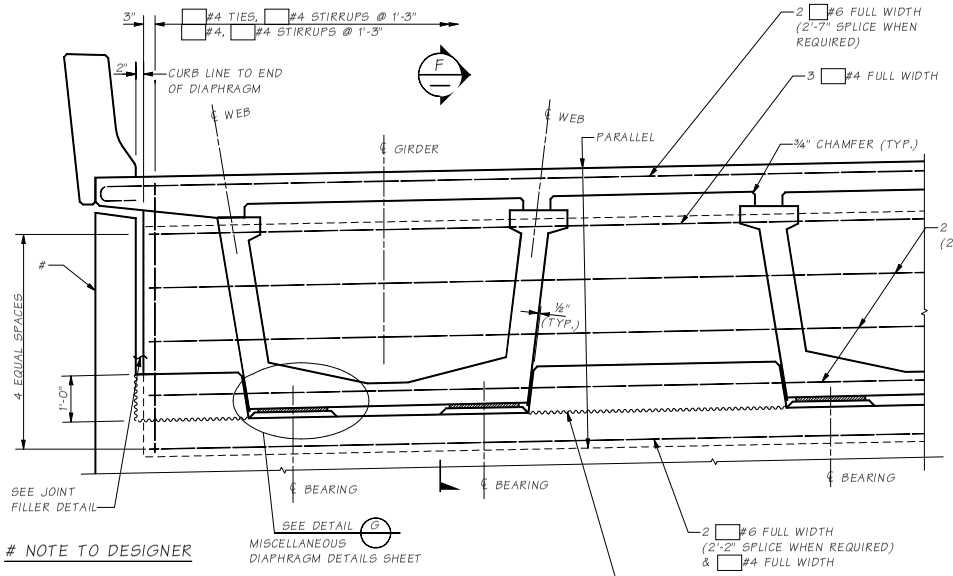

 # NOTE TO DESIGNER

If ground line is less than 2'-0" minimum below the bottom of girder at front face of abutment a curtain wall shall be provided.

TYPICAL END TYPE "A" DIAPHRAGM AT END PIERS

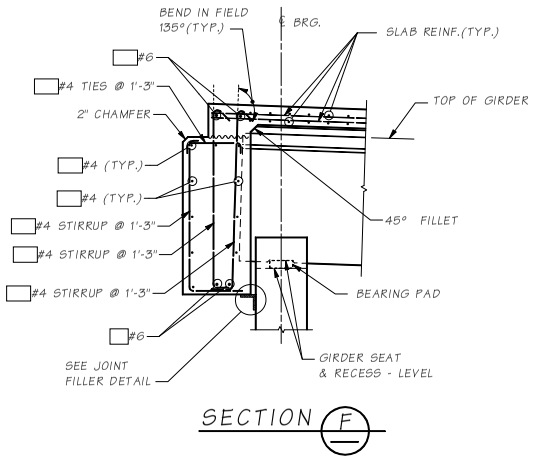

SECTION F

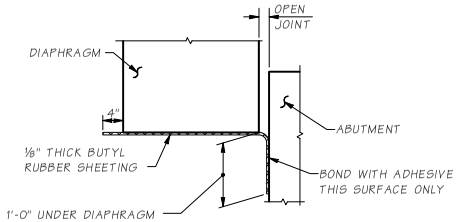

ELEVATION BUTYL RUBBER @ DIAPHRAGM

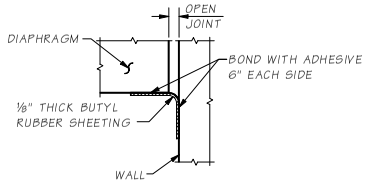

PLAN VIEW BUTYL RUBBER @ VERTICAL JOINTS

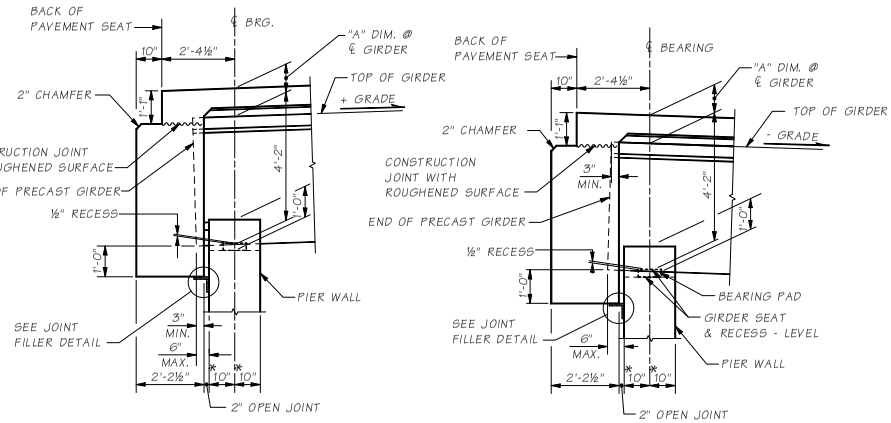

END DIAPHRAGM GEOMETRY

SECTIONS THROUGH END DIAPHRAGMS AT END PIERS
SEE "GIRDER DETAILS" SHEET FOR DIMENSION "A".
ALL LONGITUDINAL DIMENSIONS ARE NORMAL TO SKEW.

*TO BE INCREASED AS NECESSARY

BRIDGE LENGTH	JOINT
L≤200	** = 1.5 IN.
200<L≤300	** = 2.0 IN.
300<L≤400	** = 2.5 IN.
L>400	SPECIAL DESIGN

NOTE:

1. GIRDERS SHALL BE HELD RIGIDLY IN PLACE WHEN DIAPHRAGMS ARE PLACED.
2. REINFORCING BAR SHALL BE THREADED THROUGH HOLES IN GIRDERS PRIOR TO PLACING OF EXTERIOR GIRDERS. SEE PLANS FOR "TRAFFIC BARRIER" DIMENSIONS AND LOCATION. SEE "GIRDER DETAILS" SHEET FOR DIMENSION "A".
3. END DIAPHRAGM MAY BE CAST ON GRADE. IF SO, THE UPPER LEG OF THE JOINT FILLER SHALL FORM THE BOTTOM FACE FULL WIDTH.
4. JOINT FILLER TYPE 1 SHALL BE USED TO COVER ALL VERTICAL END DIAPHRAGM JOINTS. EITHER JOINT FILLER TYPE 1 OR JOINT FILLER TYPE 2 SHALL BE USED TO COVER ALL HORIZONTAL END DIAPHRAGM JOINTS.

Bridge Design Engr.	M:\STANDARDS\Girders\Trapezoidal Tubs\SIP TRAPEZOIDAL TUB END DIA ON TUB.MAN				REGION NO.	STATE	FED. AID PROJ. NO.	SHEET NO.	TOTAL SHEETS	BRIDGE AND STRUCTURES OFFICE
Supervisor					10	WASH				Washington State Department of Transportation
Designed By					JOB NUMBER					STANDARD PRESTRESSED CONCRETE GIRDERS
Checked By										
Detailed By										TRAPEZOIDAL TUB S-I-P DECK PANEL GIRDER - END DIAPHRAGM ON GIRDER DETAILS
Bridge Projects Engr.										BRIDGE SHEET NO.
Prelim. Plan By										SHEET OF SHEETS
Architect/Specialist	DATE	REVISION	BY	APP'D						

SR JOB NO. 5.6-A17-5 SHEET

Fri Feb 01 14:40:45 2008

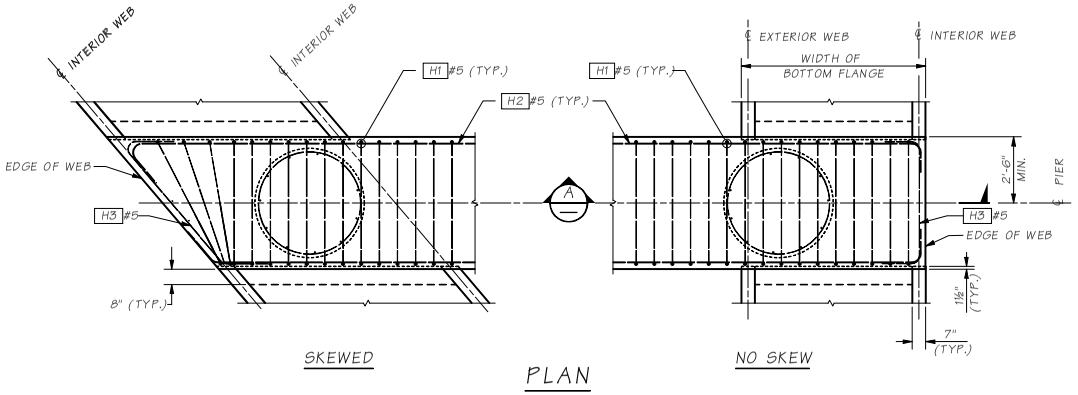

PLAN

FOR EXTENDED STRAND DETAIL SEE GIRDER SHEET 3.

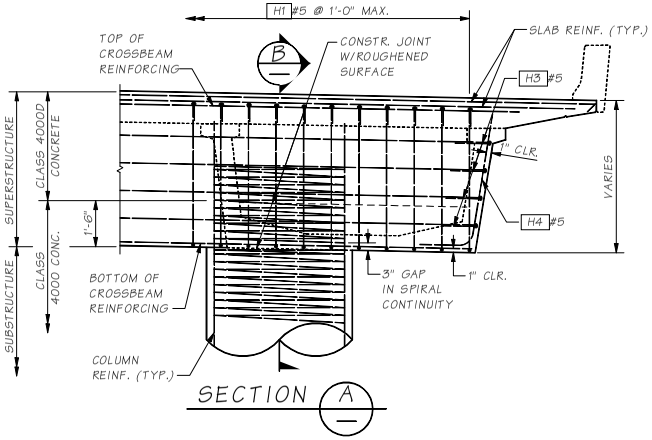

SECTION A

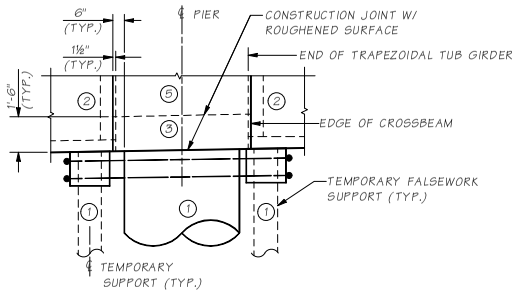

TEMPORARY SUPPORT DETAIL

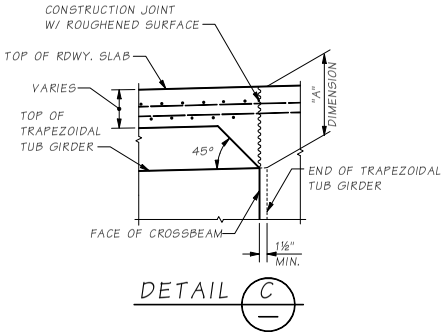

DETAIL C

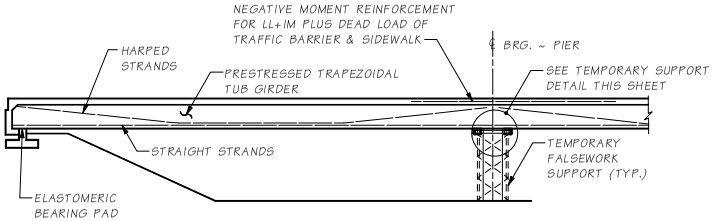

ELEVATION

CONSTRUCTION SEQUENCE

1. COLUMN & TEMP. SUPPORT
2. PLACE GIRDER ON TEMPORARY SUPPORT
3. CAST DIAPHRAGM STAGE 1
4. CAST ROADWAY SLAB
5. COMPLETE DIAPHRAGM
6. REMOVE TEMPORARY SUPPORT

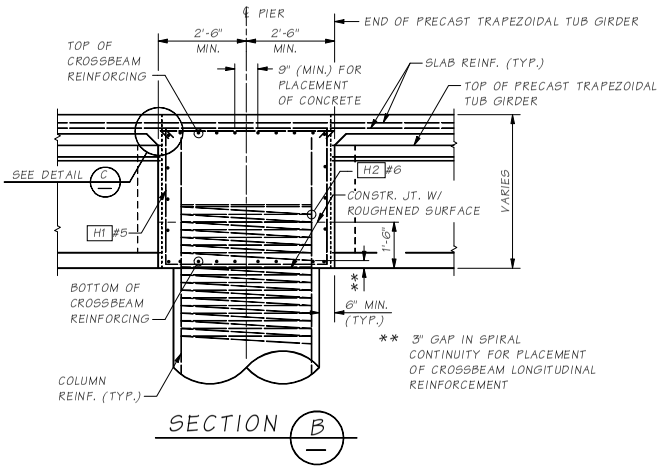

SECTION B

Bridge Design Engr.	M:\STANDARDS\Girders\Trapezoidal Tubs\SIP TRAPEZOIDAL TUB RAISED CROSSBEAM.MAN				REGION NO.	STATE	FED. AID PROJ. NO.	SHEET NO.	TOTAL SHEETS
Supervisor					10	WASH.			
Designed By					JOB NUMBER				
Checked By									
Detailed By									
Bridge Projects Engr.									
Prelim. Plan By									
Architect/Specialist	DATE	REVISION	BY	APP'D					

Fri Feb 01 14:40:52 2008

BRIDGE AND STRUCTURES OFFICE

Washington State Department of Transportation

STANDARD PRESTRESSED CONCRETE GIRDERS

TRAPEZOIDAL TUB S-I-P DECK PANEL GIRDER - RAISED CROSSBEAM DETAILS

BRIDGE SHEET NO.

SHEET OF SHEETS

SR JOB NO. SHEET

5.6-A17-6

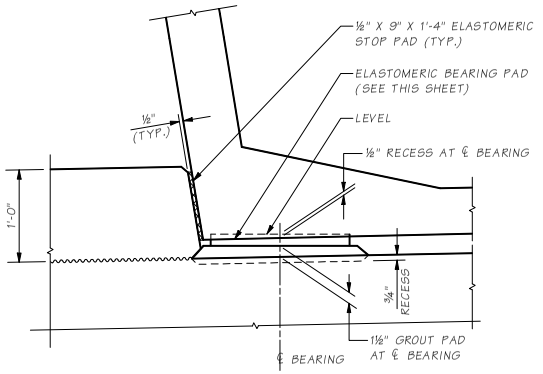

DETAIL G

NOTES:

1. GIRDER STOPS SHALL BE CONSTRUCTED AFTER GIRDER PLACEMENT.
2. ELASTOMERIC STOP PADS SHALL BE CEMENTED TO GIRDER STOP WITH APPROVED ADHESIVE.

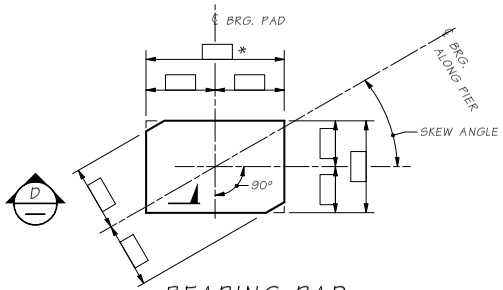

BEARING PAD

LAMINATED ELASTOMERIC BRIDGE PAD ☐ THICK (☐ SHIMS).

Skew angle shown at 30°.

* The edge of the bearing pad shall be set at 1" from the edge of the bottom flange.

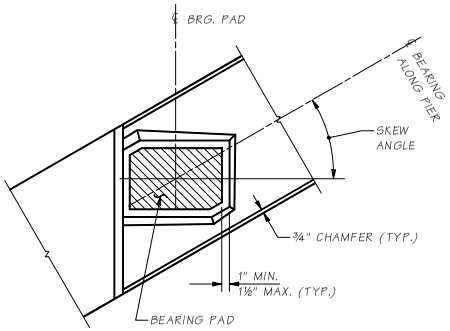

GROUT PAD DETAIL

Skew angle shown at 30°.

Bridge Design Engr.	M:\STANDARDS\Girders\Trapezoidal Tubs\SIP TRAPEZOIDAL TUB MISC DETAILS.MAN									
Supervisor					REGION NO.	STATE	FED. AID PROJ. NO.	SHEET NO.	TOTAL SHEETS	
Designed By					10	WASH.				
Checked By					JOB NUMBER					
Detailed By										
Bridge Projects Engr.										
Prelim. Plan By										
Architect/Specialist	DATE	REVISION	BY	APP'D						

Fri Feb 01 14:41:00 2008

BRIDGE AND STRUCTURES OFFICE

Washington State Department of Transportation

STANDARD PRESTRESSED CONCRETE GIRDERS

TRAPEZOIDAL TUB S-I-P DECK PANEL GIRDER MISCELLANEOUS BEARING DETAILS

BRIDGE SHEET NO.

SHEET OF SHEETS

SR JOB NO. SHEET

5.6-A17-7

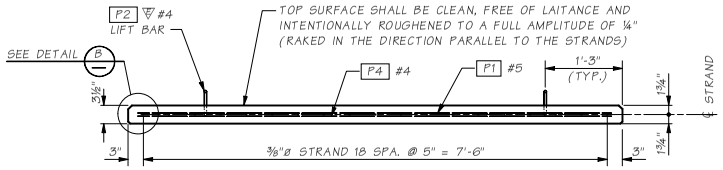

TYPICAL SECTION - PRESTRESSED PANEL

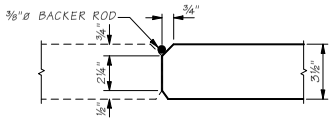

DETAIL B

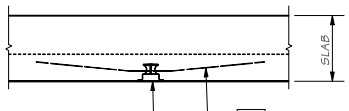

GRINNELL UNIVERSAL INSERT FIG. 282, UNISTRUT M 26 SPOT CONCRETE INSERT, DAYTON-RICHMOND IASM, OR APPROVED EQUAL. SPACE AT 6'-0" MAX. LONGITUDINALLY (TYP.) INSERT SHALL BE INSTALLED LEVEL LONGITUDINALLY AND TRANSVERSELY FOR THE FINAL ERECTED POSITION. PLACE INSERT TO PROVIDE FOR TRANSVERSE ADJUSTMENT OF HANGER RODS.

DETAIL A

NOTE:

THE FIRST INSERT SHALL BE PLACED WITHIN 2'-0" OF THE END DIAPHRAGMS.
FOR INSERT LOCATIONS, SEE "UTILITIES HANGER DETAILS" SHEET.

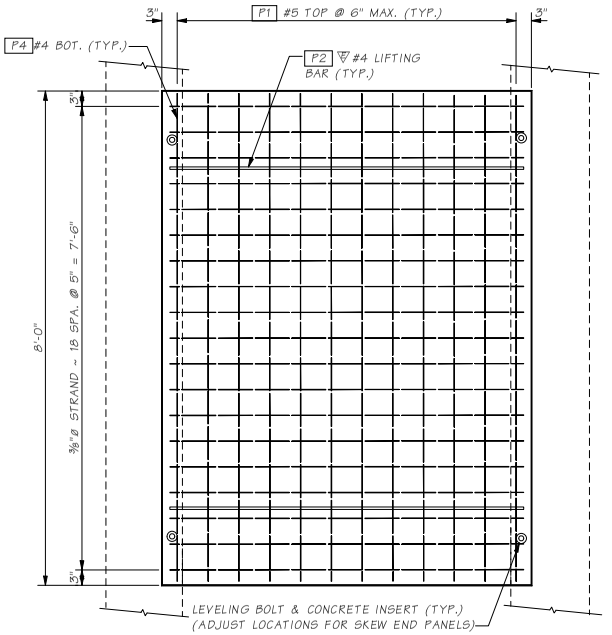

PLAN VIEW ~ PRESTRESSED PANEL

NOTES:

1. CONCRETE IN THE PRESTRESSED PRECAST DECK PANELS SHALL BE CLASS 5000.
   THE CONCRETE SHALL ATTAIN A MINIMUM COMPRESSIVE STRENGTH OF 4000 PSI BEFORE RELEASING THE PRETENSIONING STRANDS.
2. THE PRETENSION STRANDS SHALL BE 7 WIRE ⅜"ø (As = 0.085 IN²) LOW RELAXATION STRANDS (AASHTO M203 GRADE 270)
   THE JACKING FORCE SHALL BE 17.4 KIP PER STRAND.
3. GROUT BED FOR PRESTRESSED PRECAST DECK PANELS SHALL CONFORM TO THE SPECIAL PROVISIONS.
4. LOOSEN THE LEVELING BOLT BY TWO TURN AFTER THE GROUT HAS REACHED THE DESIGN STRENGTH PER STANDARD SPECIFICATION.
5. FOR SKEW END PANELS, ADJUST THE LEVELING BOLT LOCATIONS LONGITUDINALLY ALONG THE ℄ OF GIRDER, SUCH THAT EACH PANEL WILL HAVE 4 BOLTS AFTER THE SAWCUT.

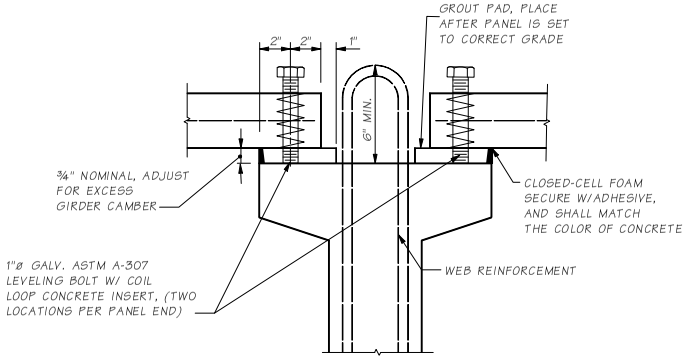

DETAIL D

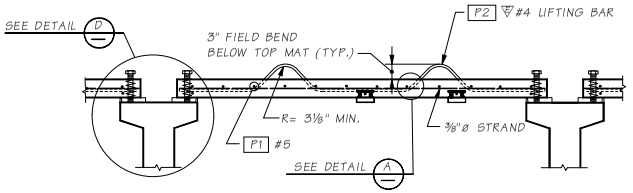

ELEVATION ~ PRESTRESSED PANEL

(DIMENSIONS SHOWN NORMAL TO ℄ TUB GIRDER)

BAR LIST

MARK #	BAR SIZE	BEND TYPE
P1	5	STRAIGHT
*P2	4 ▽	AS SHOWN
P3	4	AS SHOWN
P4	4	STRAIGHT

▽ = EPOXY COATED * VARIES
ALL REINFORCEMENT SHALL BE AASHTO M31, GR. 60.

SHEET
JOB NO.
SR 5.6-A18-1

Bridge Design Engr.	M:\STANDARDS\Girders\Trapezoidal Tubs\SIP PS DECK PANEL DETAILS.MAN				REGION NO.	STATE	FED. AID PROJ. NO.	SHEET NO.	TOTAL SHEETS	
Supervisor					10	WASH.				
Designed By					JOB NUMBER					
Checked By										
Detailed By										
Bridge Projects Engr.										
Prelim. Plan By										
Architect/Specialist	DATE	REVISION	BY	APPD						

Fri Feb 01 14:43:51 2008

BRIDGE AND STRUCTURES OFFICE

Washington State Department of Transportation

STANDARD PRESTRESSED CONCRETE GIRDERS

PRECAST PRESTRESSED STAY-IN-PLACE DECK PANEL DETAILS

BRIDGE SHEET NO.
SHEET
OF
SHEETS

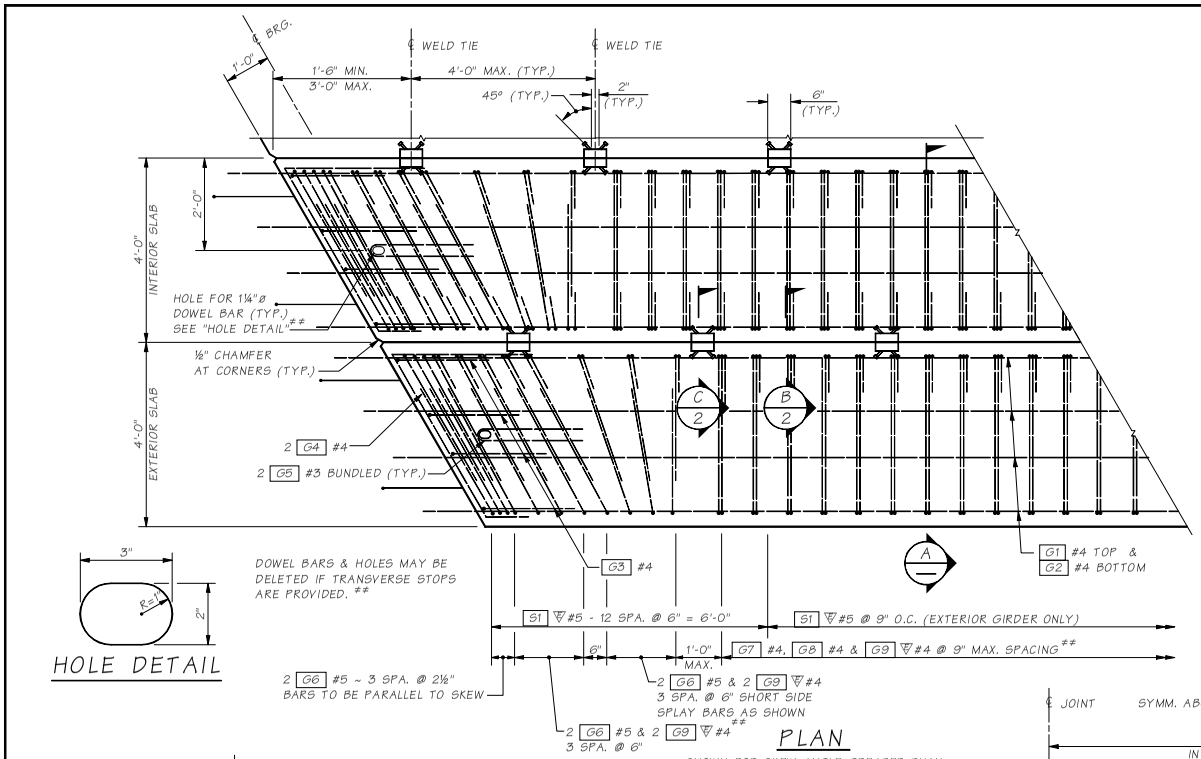

HOLE DETAIL

PLAN

SHOWN FOR SKEW ANGLE GREATER THAN OR EQUAL TO 20° (30° MAX.)
S1 NOT SHOWN FOR CLARITY

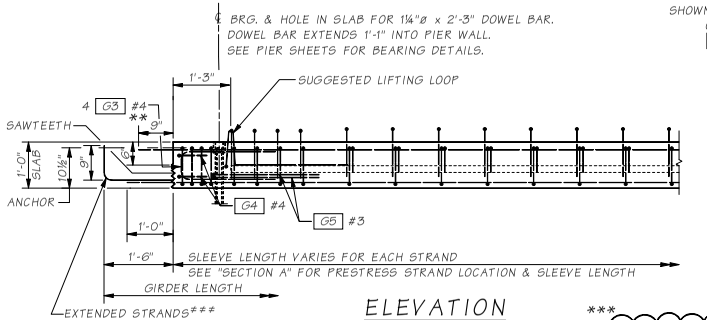

ELEVATION

** EXTEND BAR AT INTERMEDIATE DIAPHRAGM ONLY.

\#\#\# EXTEND STRANDS 3 & 4 AT END AHEAD ON STATION.
EXTEND STRANDS 5 & 6 END BACK ON STATION.

*** precast slab width may vary to match bridge geometry (8'-0" max.)

NOTES

1. PLAN LENGTH SHALL BE INCREASED AS NECESSARY TO COMPENSATE FOR SHORTENING DUE TO PRESTRESS AND SHRINKAGE.
2. ALL PRESTRESSING STEEL SHALL BE 0.6"ø LOW-RELAXATION STRANDS (AASHTO M 203 GRADE 270).
3. CUT ALL STRANDS FLUSH WITH THE GIRDER ENDS AND PAINT WITH AN APPROVED EPOXY RESIN, EXCEPT FOR EXTENDED STRANDS AS SHOWN.
4. THE TOP SURFACE OF THE GIRDER SHALL BE ROUGHENED IN ACCORDANCE WITH SECTION 6-02.3(25)H OF THE STANDARD SPECIFICATIONS, UNLESS SHOWN OTHERWISE.
5. LIFTING EMBEDMENTS SHALL BE INSTALLED IN ACCORDANCE WITH SECTION 6-02.3(25)L OF THE STANDARD SPECIFICATIONS. IF THE LIFTING LOOPS EXTEND WITHIN 3" OF THE TOP OF THE ROADWAY SLAB, THEY SHALL BE CUT OFF PRIOR TO PLACING ROADWAY SLAB. ALL LIFTING STRANDS SHALL BE OF THE SAME MATERIAL AND STRENGTH AS THE PRESTRESSING STRAND.
6. ALL REINFORCING STEEL SPLICES SHALL BE 2'-0" MINIMUM, UNLESS SHOWN OTHERWISE.
7. ALL REINFORCING BARS SHALL BE PLACED 2" FROM NEAREST FACE OF CONCRETE UNLESS SHOWN OTHERWISE.
8. NO TRAFFIC SHALL BE ALLOWED UNTIL THE ROADWAY SLAB CONCRETE HAS ATTAINED A MINIMUM STRENGTH OF 4000 PSI.
9. TEMPORARY STRANDS SHALL BE UNBONDED OVER ALL BUT THE END 7'-6" OF THE SLAB LENGTH. TEMPORARY STRANDS SHALL BE CUT AFTER ALL VOIDED SLABS ARE ERECTED, BUT BEFORE ROADWAY CONCRETE SLAB IS CAST.
10. INSERTS SHALL BE PROVIDED TO THE EXTERIOR GIRDER TO SUPPORT FORMWORK AS APPROVED BY THE ENGINEER.

NOTES TO DESIGNER

STRAND SEQUENCE

1	3	4	2
17 27 21	25 29 19 23 31	32 24 20 30 26	22 28 18
1 9 3	11 5 13 7 15	16 8 14 6 12	4 10 2

≠ WHEN DEBONDED STANDS ARE REQUIRED, PLACE AT INTERIOR STRAND LOCATION (WITHIN SECOND ROW IF POSSIBLE).

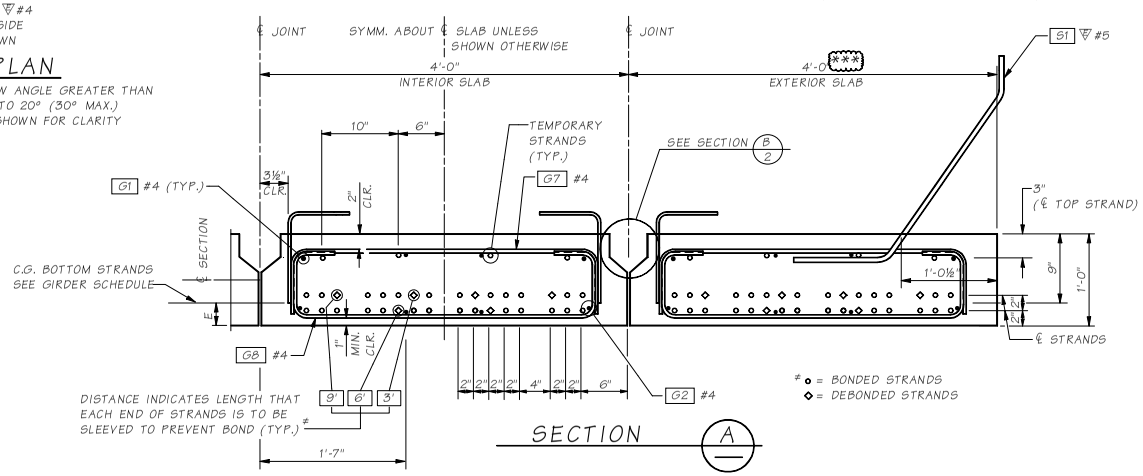

SECTION A

≠ o = BONDED STRANDS
◇ = DEBONDED STRANDS

Bridge Design Engr.	M:\STANDARDS\Girders\Flat Slab\PCFS 12 INCH SLAB 1.man				REGION NO.	STATE	FED. AID PROJ. NO.	SHEET NO.	TOTAL SHEETS	BRIDGE SHEET NO.
Supervisor										
Designed By					10	WASH.				SHEET
Checked By					JOB NUMBER					OF
Detailed By										SHEETS
Bridge Projects Engr.										
Prelim. Plan By										
Architect/Specialist	DATE	REVISION	BY	APP'D						

BRIDGE AND STRUCTURES OFFICE

Washington State Department of Transportation

PRESTRESSED CONCRETE GIRDERS

1'-0" SOLID SLAB
DETAILS 1 OF 2

SR JOB NO. 5.6-A19-1

Thu Jan 10 15:03:14 2008

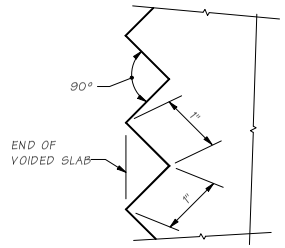

SAWTOOTH DETAILS

SAWTEETH ARE FULL WIDTH

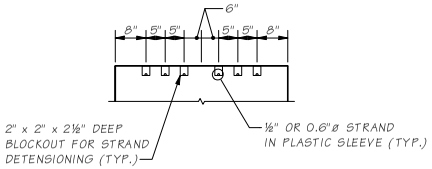

TEMPORARY STRAND BLOCKOUT DETAIL

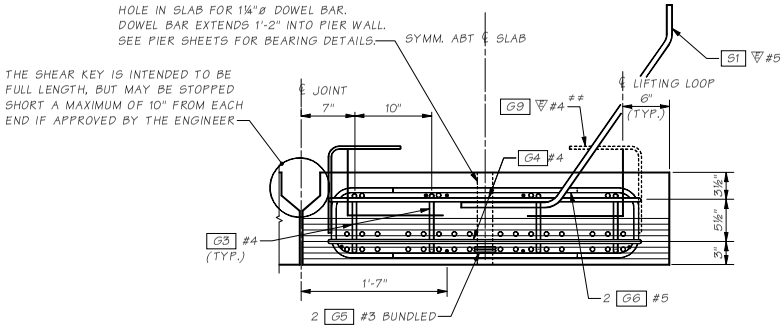

END VIEW EXTERIOR SLAB

##OMIT G9 ON OUTSIDE OF EXTERIOR GIRDER. EXTERIOR SLAB SHOWN INTERIOR SIMILAR

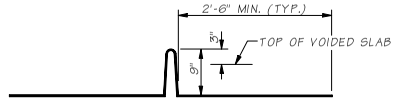

DEVELOPED ELEVATION LIFTING LOOP

MINIMUM OF 8 STRANDS PER SLAB.

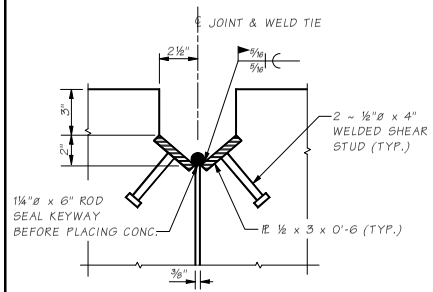

SECTION C 1

WELD TIE ALTERNATE #1

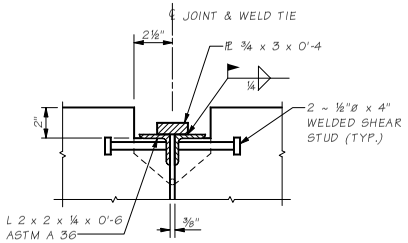

SECTION C 1

WELD TIE ALTERNATE #2

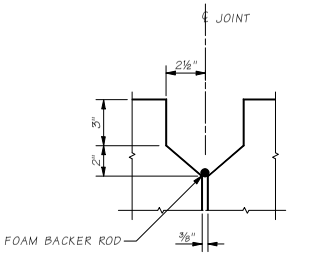

SECTION B 1

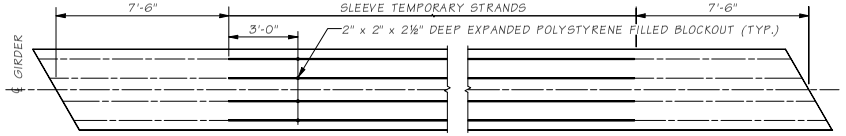

PLAN VIEW OF TEMPORARY STRANDS

NOTE: Dimensions shall be shown in Imperial units to the nearest 1/8ch inch.

BARLIST

MARK	LOCATION	SIZE	NO. REQ'D	ALL DIMENSIONS OUT TO OUT
G1	SLAB LONGIT. - TOP	4	4 β	STR.
G2	SLAB LONGIT. - BOT.	4	4	STR.
G3	END OF SLAB - TIE	4	8	
G4	END OF SLAB - TIE	4	4	
G5	END OF SLAB - TIE	3	4 δ	
G6	END OF SLAB - TIE	5	AS REQ'D BY SKEW	
G7	SLAB TRANSV. - TIE	4	VARIES WITH SPAN	
G8	SLAB TRANSV. - STIRRUP	4	VARIES WITH SPAN	
G9	SLAB VERTICAL - TOP	4	VARIES WITH SPAN	
S1	TRAFFIC BARRIER	5	VARIES WITH SPAN	

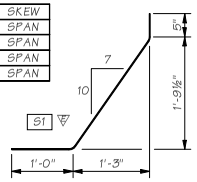

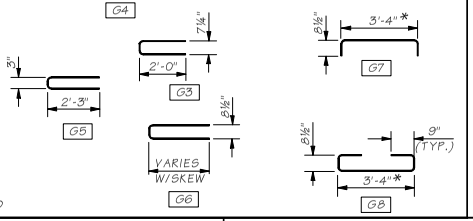

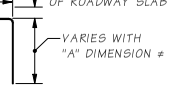

ALL REINFORCING SHALL BE ASTM A 706

δ 2 BARS BUNDLED

β ADDITIONAL BARS WILL BE REQUIRED ON VOIDED SLABS W/BARRIERS, IF OPTION 1 ANCHOR PLATE DETAIL IS SELECTED.

* VARIES FOR SKEW END

DIMENSION "A" AT ℄ BEARING =

GIRDER SCHEDULE

SPAN	GIRDER	GIRDER LENGTH	STRENGTH OF CONCRETE @ FINAL F'c (KSI)	STRENGTH OF CONCRETE @ RELEASE F'ci (KSI)	BOTTOM STRANDS NO. OF DEBOND STRANDS	BOTTOM STRANDS NO. OF BONDED STRANDS	BOTTOM STRANDS JACKING FORCE (KIPS)	TOP TEMP STRANDS NO. OF STRANDS	TOP TEMP STRANDS JACKING FORCE (KIPS)	LOCATION OF C.G. OF BOTTOM STRAND "E"	CAMBER C	CAMBER D 40	CAMBER D 120

Bridge Design Engr.	M:\STANDARDS\Girders\Flat Slab\PCPS 12 INCH SLAB 2.man			
Supervisor				
Designed By				
Checked By				
Detailed By				
Bridge Projects Engr.				
Prelim. Plan By				
Architect/Specialist	DATE	REVISION	BY	APP'D

REGION NO.	STATE	FED. AID PROJ. NO.	SHEET NO.	TOTAL SHEETS
10	WASH.			
JOB NUMBER				

BRIDGE AND STRUCTURES OFFICE

Washington State Department of Transportation

PRESTRESSED CONCRETE GIRDERS

1'-0" SOLID SLAB DETAILS 2 OF 2

BRIDGE SHEET NO.

SHEET OF SHEETS

SR JOB NO. SHEET 5.6-A19-2

Thu Jan 10 15:03:19 2008

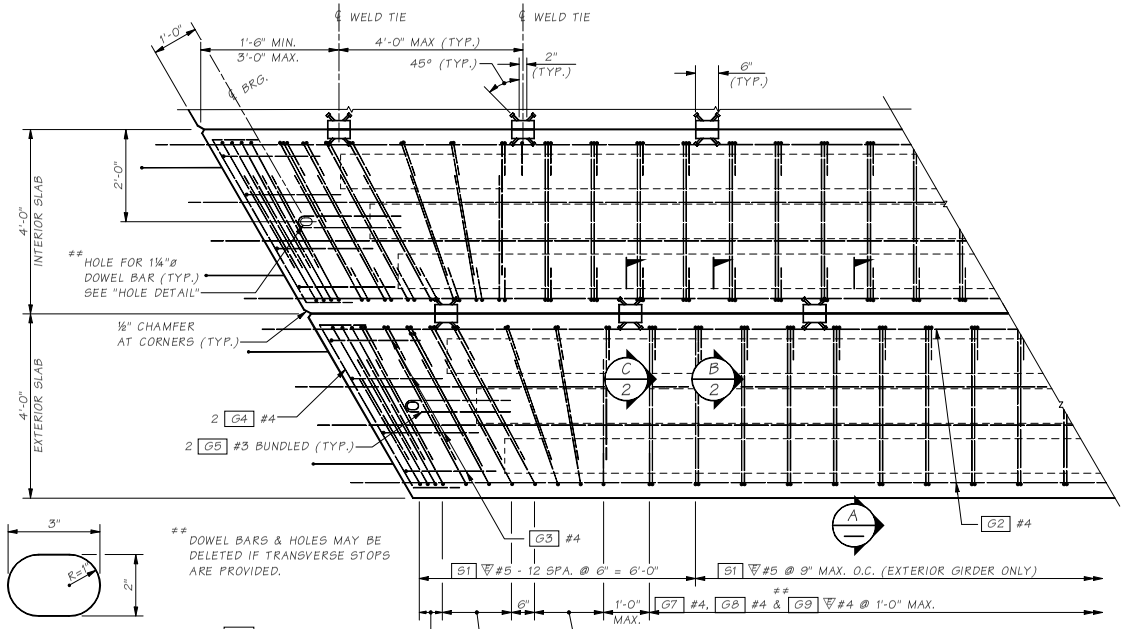

HOLE DETAIL

** DOWEL BARS & HOLES MAY BE DELETED IF TRANSVERSE STOPS ARE PROVIDED.

PLAN

SHOWN FOR SKEW ANGLE GREATER THAN OR EQUAL TO 20° (30° MAX.)
S1 BAR NOT SHOWN FOR CLARITY.

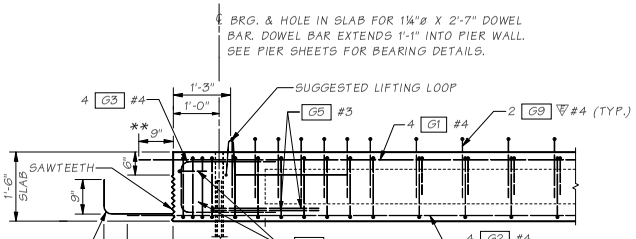

ELEVATION

** EXTEND G1 BAR AT INTERMEDIATE DIAPHRAGM ONLY.
*** EXTEND STRANDS 3 & 4 AT END AHEAD ON STATION.
EXTEND STRANDS 5 & 6 AT END BACK ON STATION.

NOTES TO THE DESIGNER

STRAND SEQUENCE

| | | |

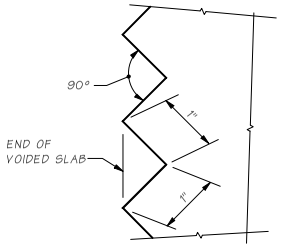

SAWTOOTH DETAILS

SAWTEETH ARE FULL WIDTH

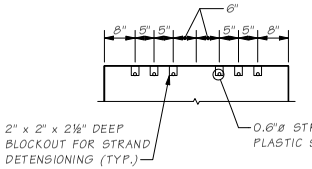

TEMPORARY STRAND BLOCKOUT DETAIL

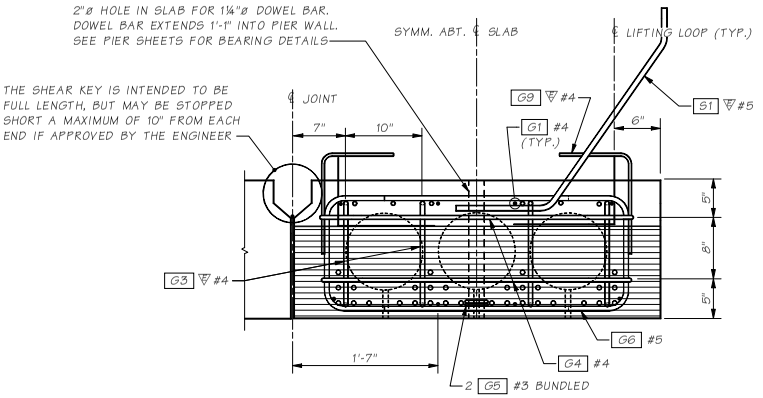

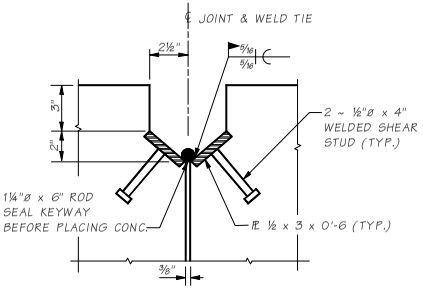

SECTION C 1

WELD TIE ALTERNATE #1

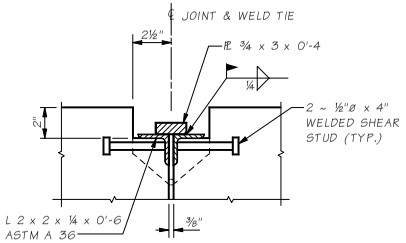

SECTION C 1

WELD TIE ALTERNATE #2

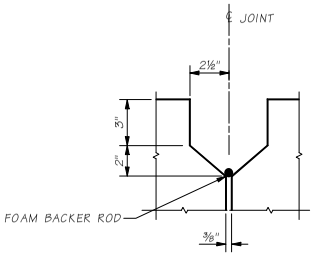

SECTION B 1

END VIEW EXTERIOR SLAB

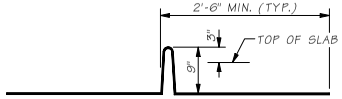

DEVELOPED ELEVATION LIFTING LOOP

MINIMUM OF 8 STRANDS PER SLAB.

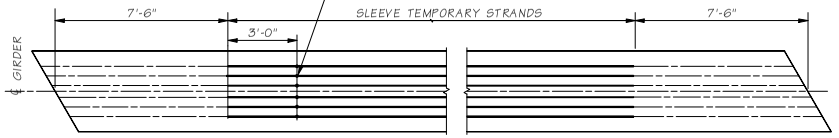

PLAN VIEW OF TEMPORARY STRANDS

BARLIST

MARK	LOCATION	SIZE	NO. REQ'D	ALL DIMENSIONS ARE OUT TO OUT
G1	LONGIT. - TOP	4	4	STR.
G2	LONGIT. - BOT.	4	4	STR.
G3	END OF TIE	4	8	
G4	END OF TIE	4	4	
G5	END OF TIE	3	4	
G6	END OF TIE	5	AS REQ'D BY SKEW	
G7	TRANSV. - TIE	4	VARIES WITH SPAN	
G8	TRANSV. - STIRRUP	4	VARIES WITH SPAN	
G9	VERTICAL - TOP	4▽	VARIES WITH SPAN	
S1	TRAFFIC BARRIER	5▽	VARIES WITH SPAN	

ALL REINFORCING SHALL BE ASTM A 706

* VARIES FOR SKEW ENDS

≠ VARIABLE LENGTH TO ANCHOR PROVIDED BY VOIDED SLAB MANUFACTURER (BASED ON ANCHOR PLACEMENT)

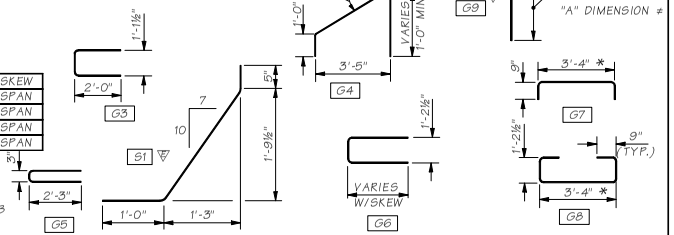

NOTE: Dimensions shall be shown in Imperial units to the nearest ⅛ch inch.

DIMENSION "A" AT ℄ BEARING =

GIRDER SCHEDULE

SPAN	GIRDER	GIRDER LENGTH	STRENGTH OF CONCRETE @ FINAL F'c (KSI)	STRENGTH OF CONCRETE @ RELEASE F'ci (KSI)	BOTTOM STRANDS NO. OF DEBOND STRANDS	BOTTOM STRANDS NO. OF BONDED STRANDS	BOTTOM STRANDS JACKING FORCE (KIPS)	TOP TEMP STRANDS NO. OF STRANDS	TOP TEMP STRANDS JACKING FORCE (KIPS)	LOCATION OF C.G. OF BOTTOM STRAND "E"	CAMBER C	CAMBER D 40	CAMBER D 120

Bridge Design Engr.	M:\STANDARDS\Girders\Flat Slab\PCPS 18 INCH SLAB 2.man			REGION NO.	STATE	FED. AID PROJ. NO.	SHEET NO.	TOTAL SHEETS	BRIDGE AND STRUCTURES OFFICE
Supervisor				10	WASH.				
Designed By				JOB NUMBER					
Checked By									
Detailed By									
Bridge Projects Engr.									
Prelim. Plan By									
Architect/Specialist	DATE	REVISION	BY	APP'D					

Thu Jan 10 15:03:29 2008

Washington State Department of Transportation

STANDARD PRESTRESSED CONCRETE GIRDERS

1'-6" VOIDED SLAB DETAILS 2 OF 2

BRIDGE SHEET NO.

SHEET OF SHEETS

SHEET JOB NO. SR

5.6-A20-2

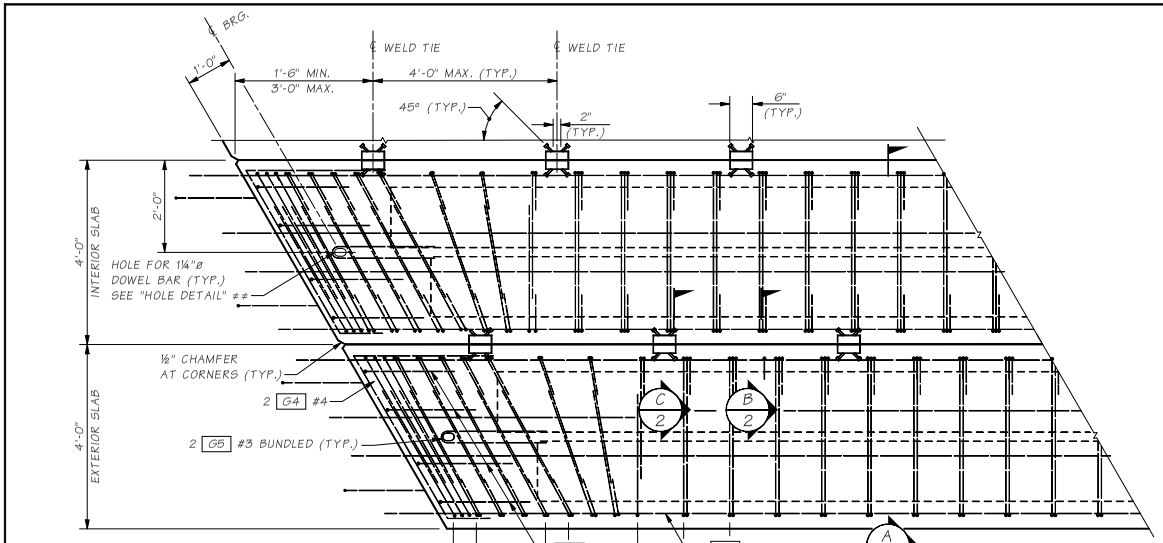

HOLE DETAIL

** DOWEL BARS & HOLES MAY BE DELETED IF TRANSVERSE STOPS ARE PROVIDED.

PLAN

℄ BRG. & HOLE IN SLAB FOR 1¼"ø x 3'-3" DOWEL BAR. DOWEL BAR EXTENDS 1'-1" INTO PIER WALL. SEE PIER SHEETS FOR BEARING DETAILS

SHOWN FOR SKEW ANGLE GREATER THAN OR EQUAL TO 20° (30° MAX.)
S1 BARS NOT SHOWN FOR CLARITY

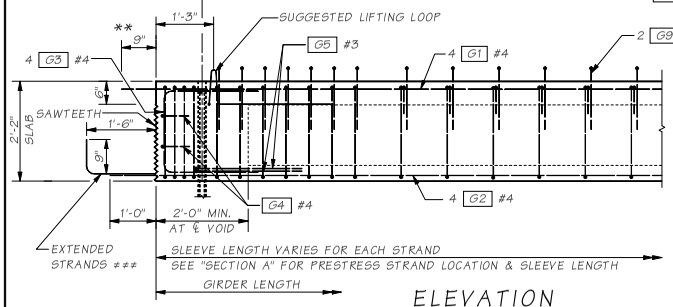

ELEVATION

*** PRECAST SLAB WIDTH MAY VARY TO MATCH BRIDGE GEOMETRY (8'-0" MAX.)

C.G. BOTTOM STRANDS SEE GIRDER SCHEDULE

NOTES TO DESIGNER
STRAND SEQUENCE

| | | |

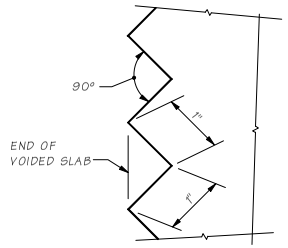

SAWTOOTH DETAILS

SAWTEETH ARE FULL WIDTH

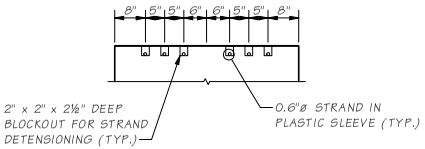

TEMPORARY STRAND BLOCKOUT DETAIL

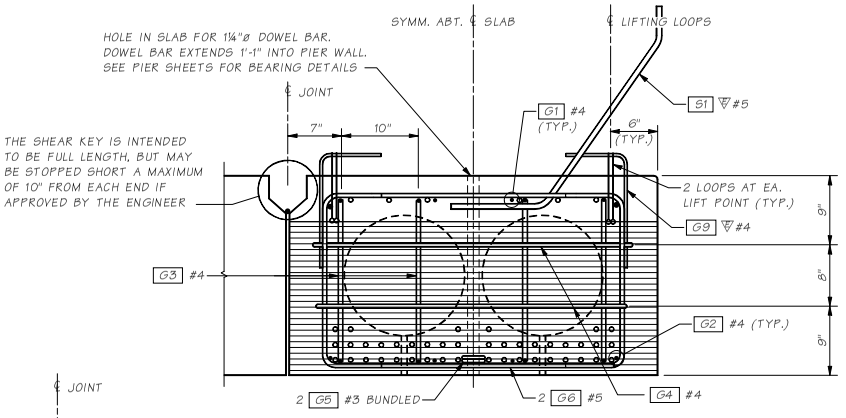

END VIEW EXTERIOR SLAB

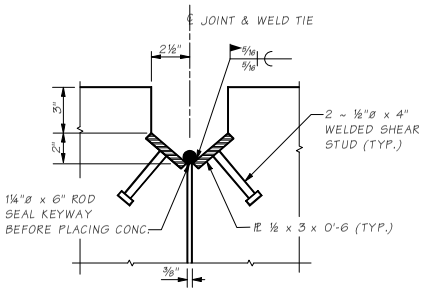

SECTION C 1

WELD TIE ALTERNATE #1

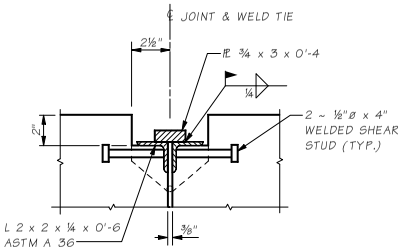

SECTION C 1

WELD TIE ALTERNATE #2

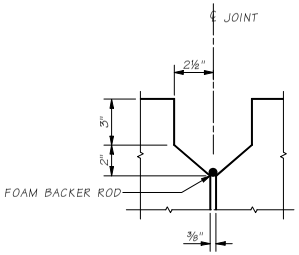

SECTION B 1

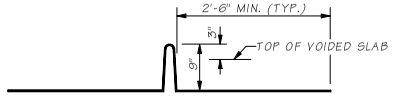

DEVELOPED ELEVATION LIFTING LOOP

MINIMUM OF 8 STRANDS PER SLAB.

BARLIST

MARK	LOCATION	SIZE	NO. REQ'D	ALL DIMENSIONS ARE OUT TO OUT
G1	LONGIT. - TOP	4	4	STR.
G2	LONGIT. - BOT.	4	4	STR.
G3	END TIE	4	8	
G4	END TIE	4	4	
G5	END TIE	3	4	
G6	END TIE	5	AS REQ'D BY SKEW	
G7	TRANSV. - TIE	4	VARIES WITH SPAN	
G8	TRANSV. - STIRRUP	4	VARIES WITH SPAN	
G9	VERTICAL	4 ▽	VARIES WITH SPAN	
S1	TRAFFIC BARRIER	5 ▽	VARIES WITH SPAN	

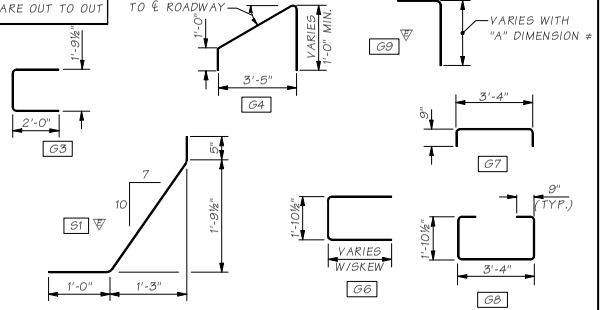

ALL REINFORCING SHALL BE ASTM A 706

≠ VARIABLE LENGTH TO ANCHOR PROVIDED BY VOIDED SLAB MANUFACTURER (BASED ON ANCHOR PLACEMENT)

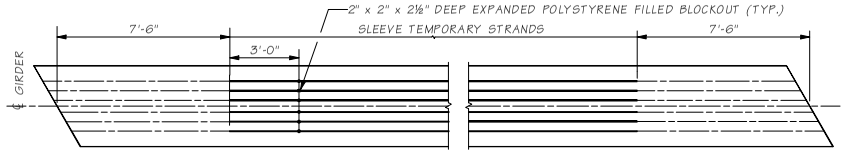

PLAN VIEW OF TEMPORARY STRANDS

NOTE: Dimensions shall be shown in Imperial units to the nearest ⅛ch inch.

DIMENSION "A" AT ℄ BEARING =

GIRDER SCHEDULE

SPAN	GIRDER	GIRDER LENGTH	STRENGTH OF CONCRETE @ FINAL F'c (KSI)	STRENGTH OF CONCRETE @ RELEASE F'ci (KSI)	BOTTOM STRANDS NO. OF DEBOND STRANDS	BOTTOM STRANDS NO. OF BONDED STRANDS	BOTTOM STRANDS JACKING FORCE (KIPS)	TOP TEMP STRANDS NO. OF STRANDS	TOP TEMP STRANDS JACKING FORCE (KIPS)	LOCATION OF C.G. OF BOTTOM STRAND "E"	CAMBER C	CAMBER D 40	CAMBER D 120

| | | | | | | | | | | | | |

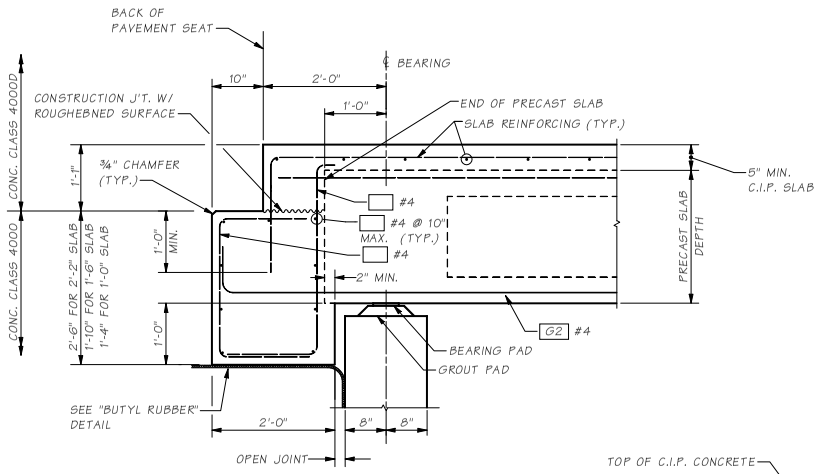

END PIER DETAIL

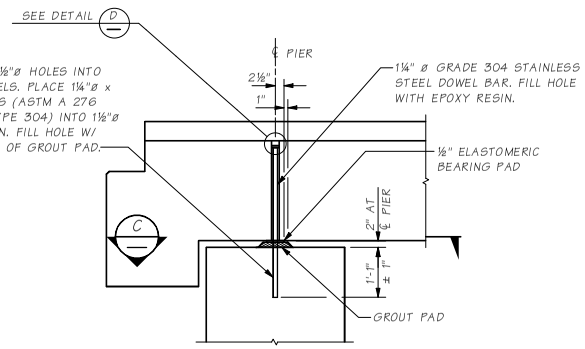

DOWEL BAR & BEARING DETAILS##

##DOWEL BARS MAY BE DELETED IF TRANSVERSE STOPS AT END PIERS ARE PROVIDED

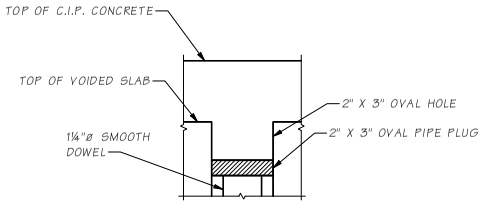

DETAIL D

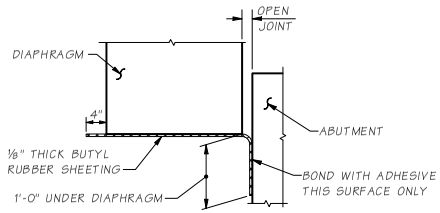

ELEVATION
BUTYL RUBBER
AT DIAPHRAGM

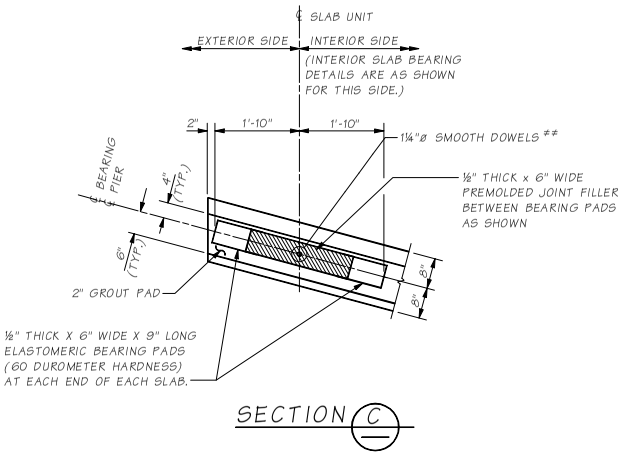

SECTION C

NOTE:
FULL BEARING OF SLAB UNIT IS REQUIRED AT EACH ELASTOMERIC BEARING

Bridge Design Engr.	M:\STANDARDS\Girders\Flat Slab\PCPS END PIER DET.man				REGION NO.	STATE	FED. AID PROJ. NO.	SHEET NO.	TOTAL SHEETS
Supervisor					10	WASH.			
Designed By					JOB NUMBER				
Checked By									
Detailed By									
Bridge Projects Engr.									
Prelim. Plan By									
Architect/Specialist	DATE	REVISION	BY	APP'D					

BRIDGE AND STRUCTURES OFFICE

Washington State Department of Transportation

STANDARD PRESTRESSED CONCRETE GIRDERS

VOIDED SLAB END PIER

BRIDGE SHEET NO.

SHEET OF SHEETS

SR JOB NO. SHEET

5.6-A21-3

Tue Feb 05 08:58:39 2008

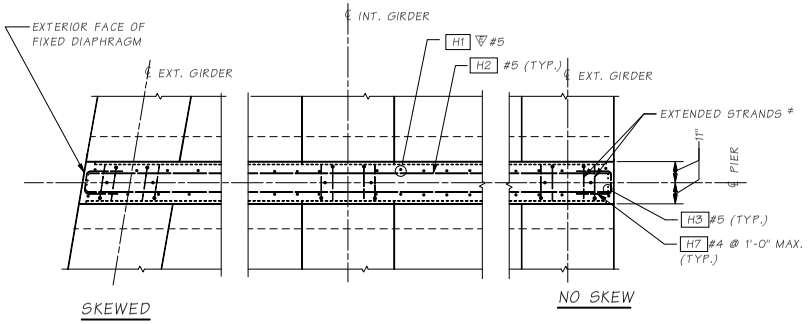

PLAN - HINGE DIAPHRAGM

10° MAX. SKEW FOR HINGE DIAPHRAGM.
FOR EXTENDED STRAND DETAIL SEE GIRDER SHEET

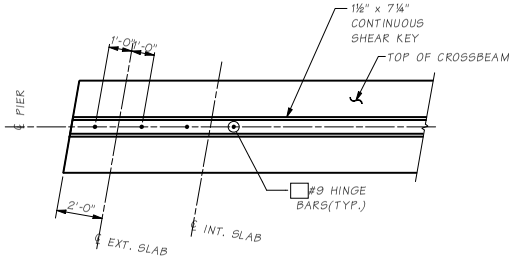

HINGE BAR PLAN

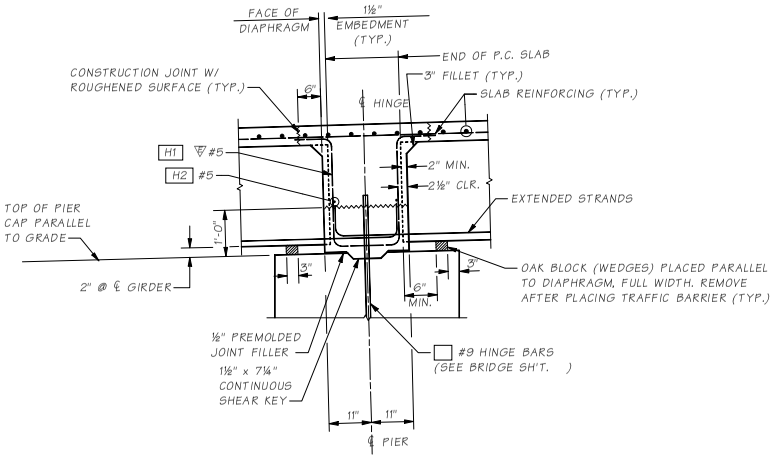

TYPICAL HINGE SECTION

** FOR SAWTOOTH SHEAR KEY DETAILS, SEE GIRDER SHEETS.

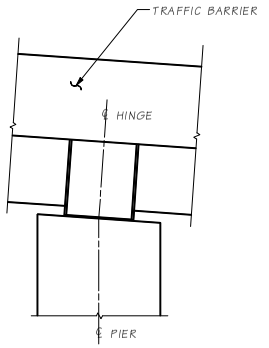

TYPICAL END VIEW HINGE DIAPHRAGM

Bridge Design Engr: Jugeah Kapur	M:\STANDARDS\Girders\Flat Slab\PCPS INTERMEDIATE PIER.MAN				REGION NO.	STATE	FED. AID PROJ. NO.	SHEET NO.	TOTAL SHEETS	BRIDGE AND STRUCTURES OFFICE	Washington State Department of Transportation	STANDARD PRESTRESSED CONCRETE GIRDER	BRIDGE SHEET NO.
Supervisor Sup					10	WASH							
Designed By Designer Date					JOB NUMBER							HINGE DIAPHRAGM AT INTERMEDIATE PIER DETAILS	SHEET OF SHEETS
Checked By Checker Date													
Detailed By Detailer Date													
Bridge Projects Engr.													
Prelim Plan By													
Architect/Specialist	DATE	REVISION	BY	APP'D									

SR 5 FILE NO. Job SHEET 1

5.6-A21-4

Tue Feb 05 08:58:49 2008

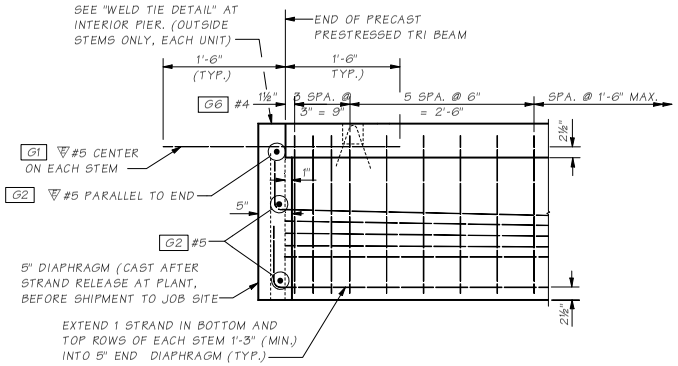

END DIAPHRAGM DETAIL

DIAPHRAGM DIMENSIONS ARE NORMAL TO SKEW.
ALL OTHERS ARE PARALELL TO ℄ GIRDER

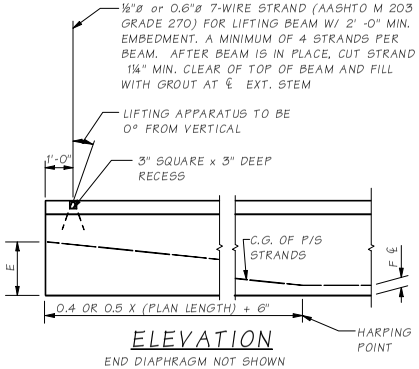

ELEVATION

END DIAPHRAGM NOT SHOWN

NOTES

1. CONCRETE SHALL BE WITH A MINIMUM COMPRESSIVE STRENGTH AT TRANSFER AND FINAL AS SHOWN IN THE DESIGN TABLE. ALL PRESTRESSING STEEL SHALL BE ½"ø OR 0.6"ø LOW RELAXATION 7-WIRE STRANDS (AASHTO M 203, GRADE 270.) STRANDS SHALL BE TENSIONED INITIALLY TO 0.75 Fpu. PLATES AND ANGLES SHALL CONFORM TO AASHTO M183 AND SHALL BE PAINTED WITH 2 COATS OF STATE FORMULA A-9-73.
2. ALL REINFORCING STEEL SHALL CONFORM TO AASHTO M31, GRADE 60. ALL REINFORCING STEEL SPLICES SHALL BE 2'-0" MINIMUM UNLESS SHOWN OTHERWISE. ALL DEFORMED WIRE SHALL BE PER ASTM A 496.
3. ALL REINFORCING BARS SHALL BE PLACED 2" CLEAR OF THE NEAREST FACE OF CONCRETE UNLESS SHOWN OTHERWISE.
4. NO TRAFFIC SHAL BE ALLOWED ON A BEAM ADJACENT TO A GROUTED JOINT UNTIL THE GROUT HAS ATTAINED A MINIMUM STRENGTH OF 4,000 PSI.
5. THE DEFLECTION VALUES LISTED IN THE DESIGN TABLE ARE COMPUTED DEFLECTIONS AT MID-SPAN BASED ON THE FOLLOWING TIME ELAPSE ASSUMPTIONS:
   - INITIAL CONCRETE COMPRESSIVE STRENGTH AT RELEASE WILL BE ATTAINED IN ONE (1) DAY.
   - FINAL CONCRETE COMPRESSIVE STRENGTH AT 28 DAYS WILL BE ATTAINED IN SEVEN (7) DAYS.
   - THE FINAL DEFLECTION IS BASED ON A CONCRETE AGE OF TWO THOUSAND (2000) DAYS.
   - THE FINAL DEFLECTION DUE TO SUPERIMPOSED LOAD (ASPHALT OVERLAY PLUS TRAFFIC BARRIERS) IS BASED ON A CONCRETE AGE OF TWO THOUSAND (2000) DAYS WITH THE LOAD ASSUMED TO BE PLACED SIXTY (60) DAYS AFTER BEAMS ARE CAST.
6. IF THE ACTUAL CONDITIONS VARY SUBSTANTIALLY FROM THOSE ASSUMED ABOVE, THE DEFLECTIONS SHOULD BE MODIFIED AND SUBMITTED TO THE DESIGN ENGINEER FOR APPROVAL. THE TIME ASSUMPTIONS MAY VARY BY ± 30%.
7. IT IS INTENDED THAT A MEMBRANE WATERPROOFING AND ASPHALT OVERLAY WILL BE INSTALLED ON THE IN-PLACE SECTION.THE ASPHALT SHALL BE VARIED TO PARTIALLY COMPENSATE FOR THE TWO THOUSAND (2000) DAY SLAB DEFLECTION. THE THICKNESS OF ASPHALT SHALL BE A MINIMUM OF 0.15 FEET AT THE MIDSPAN.

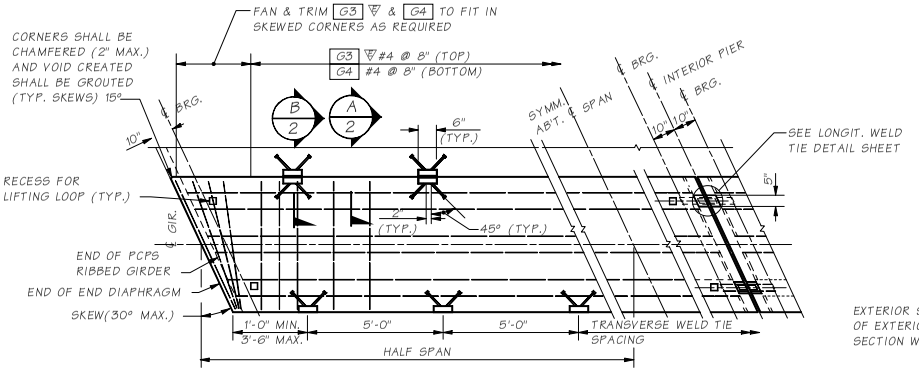

GIRDER PLAN

OMIT WELD TIES ON EXTERIOR EDGE OF EXTERIOR GIRDER.
* LONGITUDINAL WELD TIES ARE REQUIRED AT END PIER WHEN APPROACH SLAB IS USED

* May be varied to meet superstructure width.
** Stirrup spacing to be determined by analysis.

W*	B*
4'-0"	1⅛"
5'-0"	7⅛"
6'-0"	1'-1⅛"

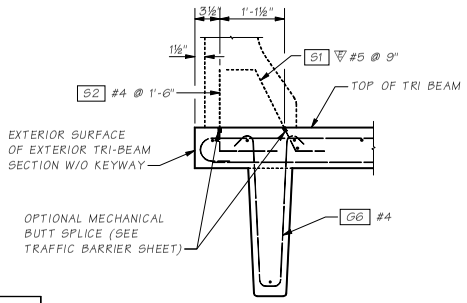

EXTERIOR GIRDER REINFORCING

▽ EPOXY COATED

MARK	LOCATION	SIZE	NO. REQ'D.	BENDING DIAGRAM (ALL DIMENSIONS ARE OUT TO OUT)
G1	STEM - LONGIT.	▽5	6	
G2	DIAPH. - TRANSV.	▽5	6	STR.
G3	TRANSV.	▽4	VARIES	VARIES
G4	TRANSV.	4	VARIES	STR.
G5	LONGITUDINAL	▽4	VARIES	
S1	T.B. TO DECK TIE.	▽5	VARIES	
S2	T.B. TO DECK TIE	4	VARIES	

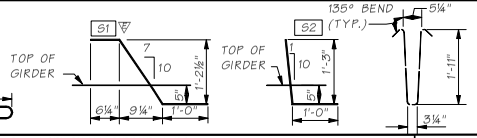

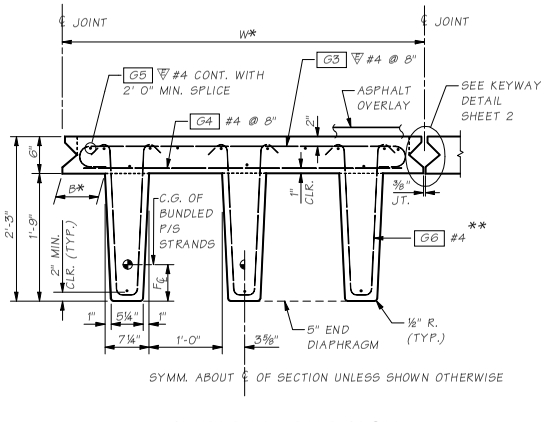

TYPICAL SECTION

SECTION SHOWN NEAR MIDSPAN

Bridge Design Engr.	M:\STANDARDS\Girders\Tri-Beam\TRI-BEAM GIRDER 4 FT.man									
Supervisor					REGION NO.	STATE	FED. AID PROJ. NO.	SHEET NO.	TOTAL SHEETS	BRIDGE AND STRUCTURES OFFICE
Designed By					10	WASH.				Washington State Department of Transportation
Checked By					JOB NUMBER					STANDARD PRESTRESSED CONCRETE GIRDERS
Detailed By										
Bridge Projects Engr.										PRECAST PRESTRESSED RIBBED GIRDER DETAILS 1 OF 2
Prelim. Plan By										BRIDGE SHEET NO. / SHEET / OF / SHEETS
Architect/Specialist	DATE	REVISION	BY	APP'D						

SHEET
JOB NO.
SR
5.6-A22-1
Tue Feb 05 09:04:15 2008

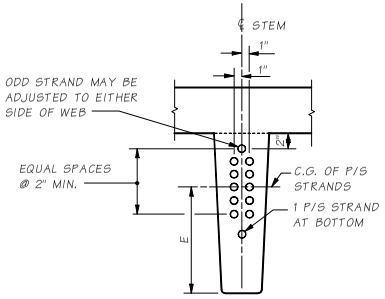

STRAND PATTERN AT GIRDER END

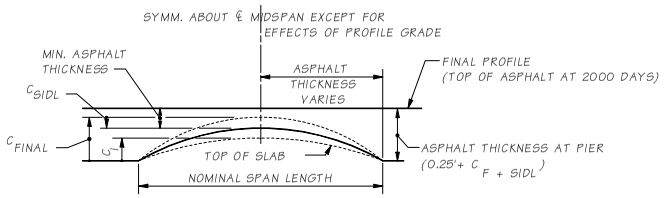

CAMBER DETAIL

C_I = CAMBER AT TRANSFER DUE TO PRESTRESSING AND GIRDER SELF WEIGHT.
C_{FINAL} = CAMBER AT 2000 DAYS.
C_{SIDL} = DEFLECTION DUE TO WEIGHT OF ACP OVERLAY AND TRAFFIC BARRIER.
$C_{F+SIDL} = C_{FINAL} + C_{SIDL}$

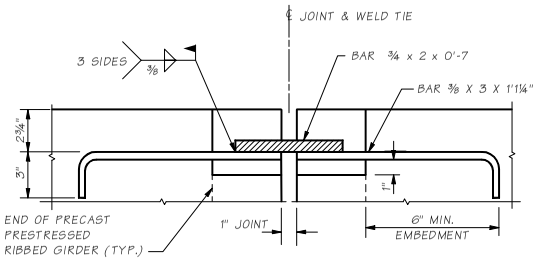

LONGITUDINAL WELD TIE DETAIL

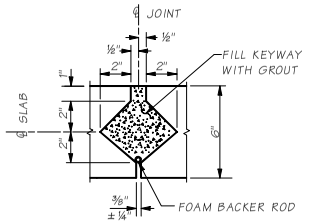

SECTION A 1
KEYWAY ALTERNATE 1

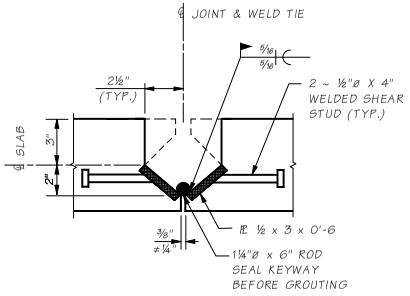

SECTION B 1
WELD TIE ALTERNATE #1

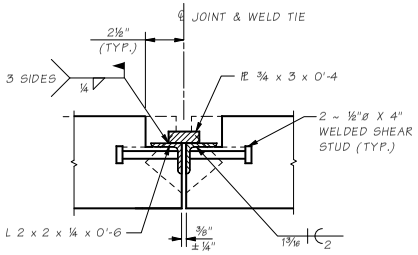

SECTION B 1
WELD TIE ALTERNATE #2

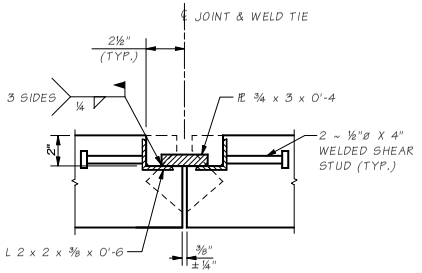

SECTION B 1
WELD TIE ALTERNATE #3

NOTE:
Dimensions shall be shown in Imperial units to the nearest 1/8th inch.

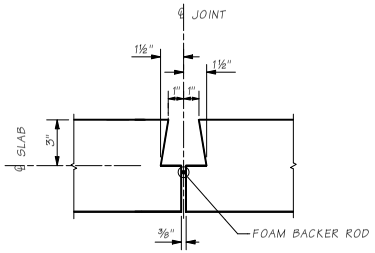

SECTION A 1
KEYWAY ALTENATE 2

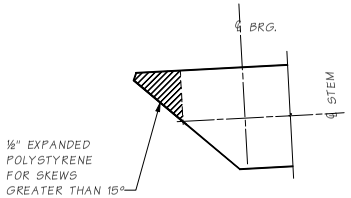

PLAN

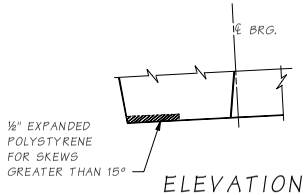

ELEVATION

STEM RECESS DETAIL

DESIGN TABLE

PLAN LENGTH	NOMINAL SPAN CTR. TO CTR. BEARING (FT.)	HARP POINT (☐ x PLAN LENGTH)	NO. STRANDS	DIMENSION "W"	F ℄	DISTANCE "E" TO C.G.S. AT END BLOCK	CONCRETE COMPRESSIVE STRENGTH		ESTIMATED DEFLECTION AT MIDSPAN		
							INITIAL AT RELEASE (KSI)	FINAL AT 28 DAYS (KSI)	UPWARD AT TRANSFER OF PRESTRESS (Δ I)	FINAL UPWARD FOR RIBBED GIRDER ONLY (Δ 2000)	FINAL DOWNWARD DUE TO SUPER IMPOSED DEAD LOAD (Δ SDL)

Bridge Design Engr.	M:\STANDARDS\Girders\Tri-Beam\TRI-BEAM 4 FT. - 2.man								
Supervisor					REGION NO.	STATE	FED. AID PROJ. NO.	SHEET NO.	TOTAL SHEETS
Designed By					10	WASH.			
Checked By					JOB NUMBER				
Detailed By									
Bridge Projects Engr.									
Prelim Plan By									
Architect/Specialist	DATE	REVISION	BY	APP'D					

Tue Feb 05 09:04:21 2008

BRIDGE AND STRUCTURES OFFICE

Washington State Department of Transportation

STANDARD PRESTRESSED CONCRETE GIRDERS

PRECAST PRESTRESSED RIBBED GIRDER DETAILS 2 OF 2

BRIDGE SHEET NO.

SHEET OF SHEETS

SR JOB NO. SHEET 5.6-A22-2

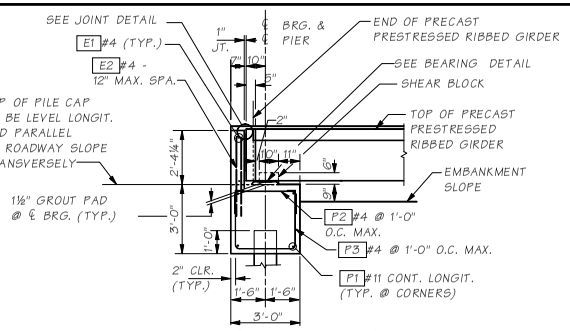

END PIER WITHOUT APPROACH SLAB

NOTE: ALL DIMENSIONS SHOWN ARE NORMAL TO ℄ BRG.

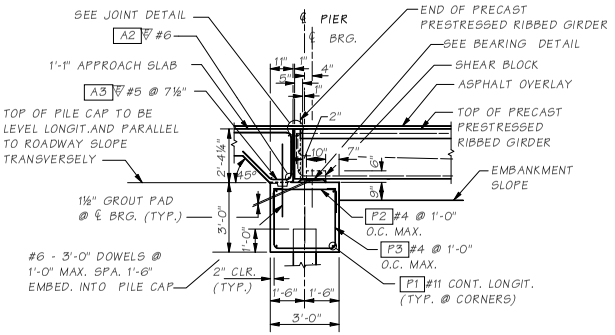

END PIER WITH APPROACH SLAB

NOTE: END ANCHORS NOT REQUIRED PER STD. PLAN A-2
ALL DIMENSIONS SHOWN ARE NORMAL TO BRG.

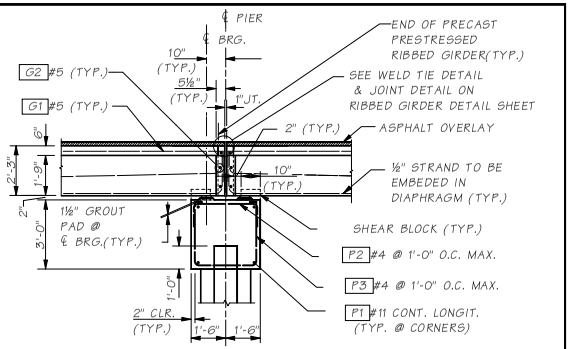

INTERIOR PIER

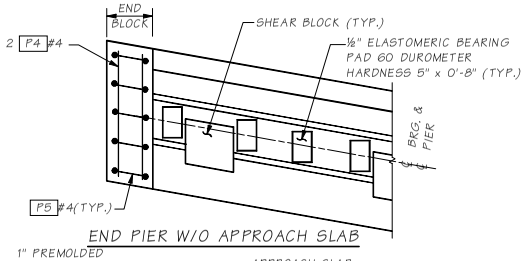

END PIER W/O APPROACH SLAB

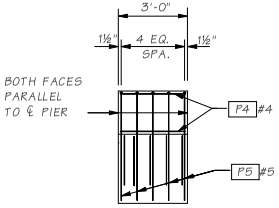

END VIEW

END BLOCK - BOTH ENDS OF PIER

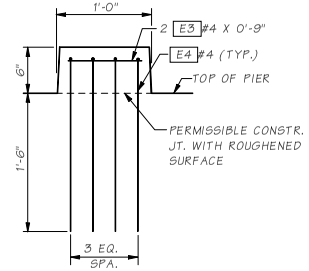

SHEAR BLOCK DETAIL

POUR AFTER TRI-BEAMS HAVE BEEN PLACED AND GROUTED

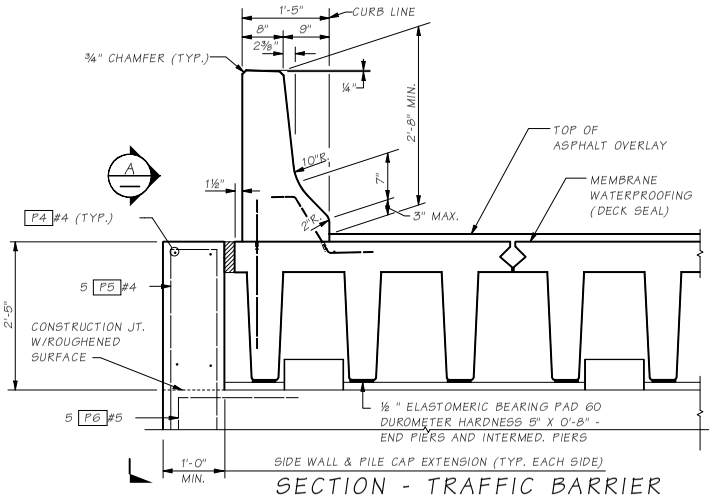

SECTION - TRAFFIC BARRIER

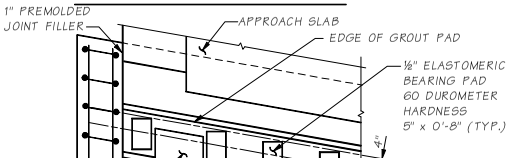

END PIER W/APPROACH SLAB

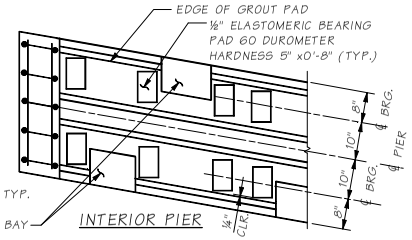

INTERIOR PIER

BEARING DETAILS

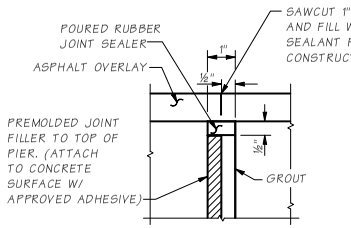

JOINT DETAIL

JOINT DETAIL TAKEN @ INTERIOR PIER AND PIER WITH APPROACH SLAB

NOTE: FULL BEARING OF TRI-BEAM UNIT IS REQUIRED AT EACH ELASTOMERIC BEARING.

BAR LIST

▽ Epoxy Coated

BENDING DIAGRAM
ALL REINFORCING SHALL BE AASHTO M 31, GR. 60

MARK	LOCATION	SIZE	NO. REQ'D. PER PIER	
P1	LONGIT - TOP & BOT.	11	4	STR
P2	STIRRUPS	4	VARIES W/PIER LENGTH	
P3	STIRRUPS	4	VARIES W/PIER LENGTH	
P4	END BLOCK REINF.	4	8	STR
P5	END BLOCK STIRR.	5	10	
P6	CORNER DOWELS	5	10	
	END BLOCK W/O APPROACH SLAB			
E1	LONGIT.	4	4	STR
E2	END BLOCK STIRR.	4	VARIES W/PIER LENGTH	
	ADDITIONAL APPROACH SLAB STEEL			
A1	DOWELS	6	VARIES W/PIER LENGTH	
A2	LONGIT.	▽6	3	STR
A3	STIRRUPS	▽5	VARIES W/PIER LENGTH	

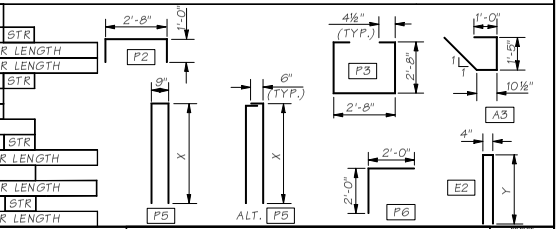

Bridge Design Engr.	M:\STANDARDS\Girders\Tri-Beam\PIERS FOR TRIBEAM.man								
Supervisor					REGION NO.	STATE	FED. AID PROJ. NO.	SHEET NO.	TOTAL SHEETS
Designed By					10	WASH.			
Checked By					JOB NUMBER				
Detailed By									
Bridge Projects Engr.									
Prelim. Plan By									
Architect/Specialist	DATE	REVISION	BY	APP'D					

BRIDGE AND STRUCTURES OFFICE

Washington State Department of Transportation

STANDARD PRESTRESSED CONCRETE GIRDERS

PRECAST PRESTRESSED RIBBED GIRDER PIER DETAILS

BRIDGE SHEET NO. SHEET OF SHEETS

SR JOB NO. SHEET 5.6-A22-3

Tue Feb 05 09:04:26 2008

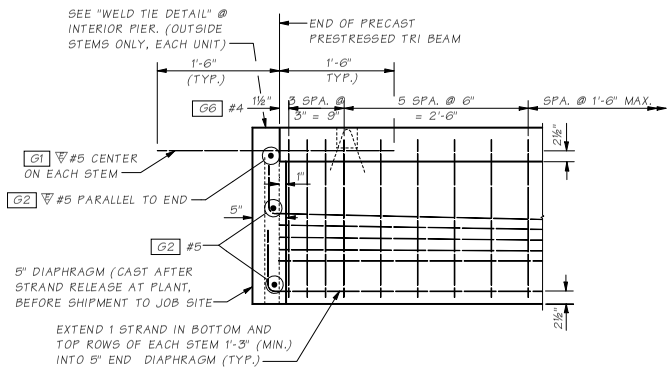

END DIAPHRAGM DETAIL

DIAPHRAGM DIMENSIONS ARE NORMAL TO SKEW.
ALL OTHERS ARE PARALELL TO ℄ GIRDER

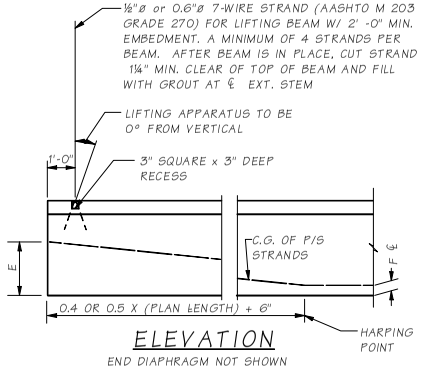

ELEVATION

END DIAPHRAGM NOT SHOWN

NOTES

1. CONCRETE SHALL BE WITH A MINIMUM COMPRESSIVE STRENGTH AT TRANSFER AND FINAL AS SHOWN IN THE DESIGN TABLE. ALL PRESTRESSING STEEL SHALL BE ½"ø OR 0.6"ø LOW RELAXATION 7-WIRE STRANDS (AASHTO M 203, GRADE 270,) STRANDS SHALL BE TENSIONED INITIALLY TO 0.75 Fpu. PLATES AND ANGLES SHALL CONFORM TO AASHTO M183 AND SHALL BE PAINTED WITH 2 COATS OF STATE FORMULA A-9-73.
2. ALL REINFORCING STEEL SHALL CONFORM TO AASHTO M31, GRADE 60. ALL REINFORCING STEEL SPLICES SHALL BE 2'-0" MINIMUM UNLESS SHOWN OTHERWISE. ALL DEFORMED WIRE SHALL BE PER ASTM A 496.
3. ALL REINFORCING BARS SHALL BE PLACED 2" CLEAR OF THE NEAREST FACE OF CONCRETE UNLESS SHOWN OTHERWISE.
4. NO TRAFFIC SHAL BE ALLOWED ON A BEAM ADJACENT TO A GROUTED JOINT UNTIL THE GROUT HAS ATTAINED A MINIMUM STRENGTH OF 4,000 PSI.
5. THE DEFLECTION VALUES LISTED IN THE DESIGN TABLE ARE COMPUTED DEFLECTIONS AT MID-SPAN BASED ON THE FOLLOWING TIME ELAPSE ASSUMPTIONS:
   - INITIAL CONCRETE COMPRESSIVE STRENGTH AT RELEASE WILL BE ATTAINED IN ONE (1) DAY.
   - FINAL CONCRETE COMPRESSIVE STRENGTH AT 28 DAYS WILL BE ATTAINED IN SEVEN (7) DAYS.
   - THE FINAL DEFLECTION IS BASED ON A CONCRETE AGE OF TWO THOUSAND (2000) DAYS.
   - THE FINAL DEFLECTION DUE TO SUPERIMPOSED LOAD (ASPHALT OVERLAY PLUS TRAFFIC BARRIERS) IS BASED ON A CONCRETE AGE OF TWO THOUSAND (2000) DAYS WITH THE LOAD ASSUMED TO BE PLACED SIXTY (60) DAYS AFTER BEAMS ARE CAST.
6. IF THE ACTUAL CONDITIONS VARY SUBSTANTIALLY FROM THOSE ASSUMED ABOVE, THE DEFLECTIONS SHOULD BE MODIFIED AND SUBMITTED TO THE DESIGN ENGINEER FOR APPROVAL. THE TIME ASSUMPTIONS MAY VARY BY ± 30%.
7. IT IS INTENDED THAT A MEMBRANE WATERPROOFING AND ASPHALT OVERLAY WILL BE INSTALLED ON THE IN-PLACE SECTION.THE ASPHALT SHALL BE VARIED TO PARTIALLY COMPENSATE FOR THE TWO THOUSAND (2000) DAY SLAB DEFLECTION. THE THICKNESS OF ASPHALT SHALL BE A MINIMUM OF 0.15 FEET AT THE MIDSPAN.

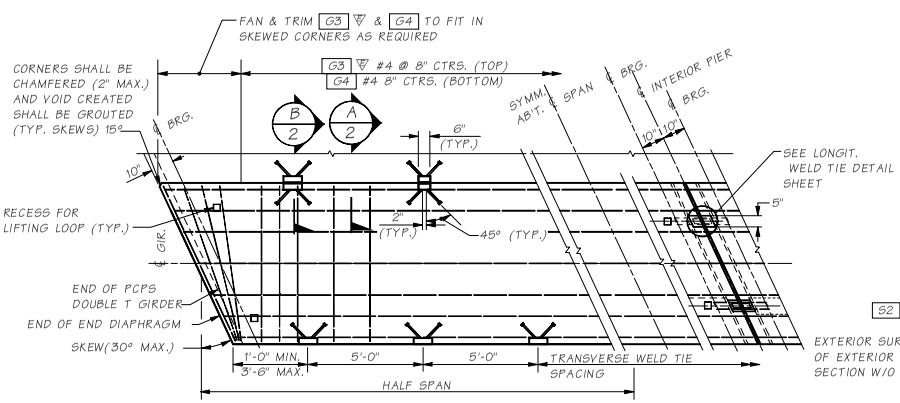

GIRDER PLAN

OMIT WELD TIES ON EXTERIOR EDGE OF EXTERIOR GIRDER.
* LONGITUDINAL WELD TIES ARE REQUIRED AT END PIER WHEN APPROACH SLAB IS USED

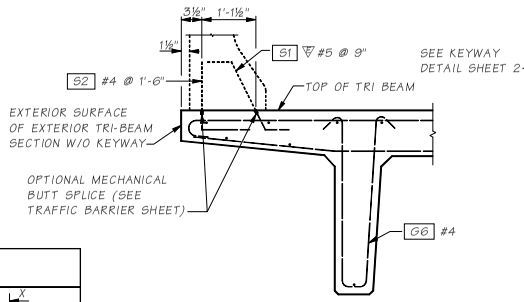

EXTERIOR GIRDER REINFORCING

MARK	LOCATION	SIZE	NO. REQ'D.	BENDING DIAGRAM (ALL DIMENSIONS ARE OUT TO OUT)
G1	STEM - LONGIT.	▽5	6	
G2	DIAPH. - TRANSV.	▽5	6	STR.
G3	TRANSVERSE	▽4	VARIES	
G4	TRANSVERSE	4	VARIES	STR.
G5	LONGITUDINAL	▽4	VARIES	
G6	STIRRUP	4	VARIES	
S1	T.B. TO DECK TIE.	▽5	VARIES	
S2	T.B. TO DECK TIE	4	VARIES	

▽ EPOXY COATED

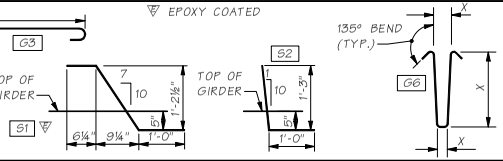

* May be varied to meet superstructure width.
** Stirrup spacing to be determined by analysis.

W *	W1
9'-0"	4'-0"
10'-0"	5'-0"
11'-0"	6'-0"

D	W2
1'-8"	7½"
2'-0"	7¼"
2'-4"	7"
2'-8"	6¾"
3'-0"	6½"

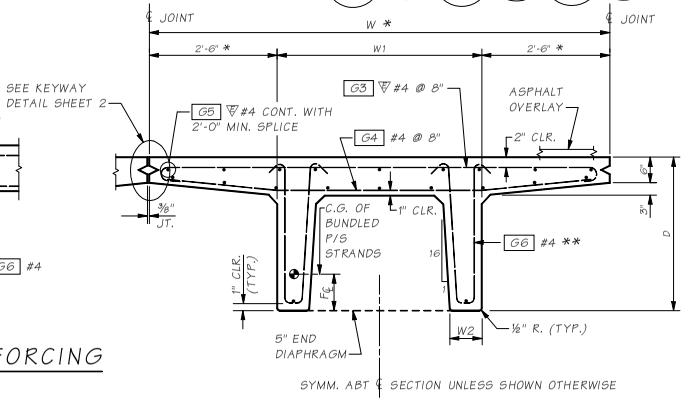

TYPICAL SECTION

SECTION SHOWN NEAR MIDSPAN

Bridge Design Engr.	M:\STANDARDS\Girders\Double Tee Girders\DOUBLE TEE - 1.man				
Supervisor					
Designed By					
Checked By					
Detailed By					
Bridge Projects Engr.					
Prelim. Plan By					
Architect/Specialist	DATE	REVISION	BY	APP'D	

REGION NO.	STATE	FED. AID PROJ. NO.	SHEET NO.	TOTAL SHEETS
10	WASH.			
JOB NUMBER				

BRIDGE AND STRUCTURES OFFICE

Washington State Department of Transportation

STANDARD PRESTRESSED CONCRETE GIRDERS

PRECAST PRESTRESSED DOUBLE T DETAILS 1 OF 2

BRIDGE SHEET NO. | SHEET | OF | SHEETS

SR JOB NO. SHEET 5.6-A23-1

Tue Feb 05 09:07:03 2008

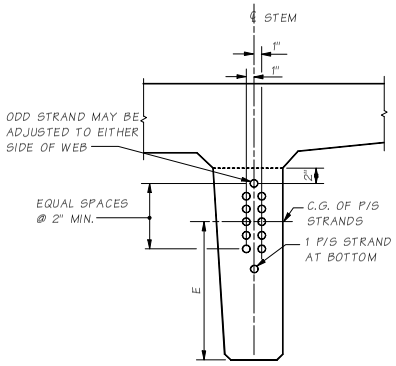

STRAND PATTERN AT GIRDER END

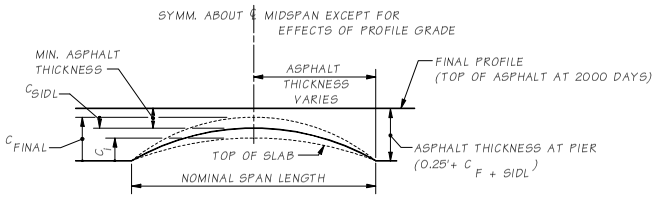

CAMBER DETAIL

C_I = CAMBER AT TRANSFER DUE TO PRESTRESSING AND GIRDER SELF WEIGHT.
C_{FINAL} = CAMBER AT 2000 DAYS.
C_{SIDL} = DEFLECTION DUE TO WEIGHT OF ACP OVERLAY AND TRAFFIC BARRIER.
$C_{F+SIDL} = C_{FINAL} + C_{SIDL}$

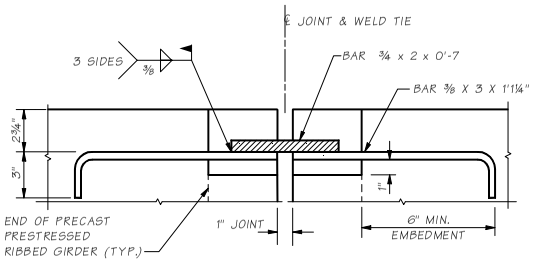

LONGITUDINAL WELD TIE DETAIL

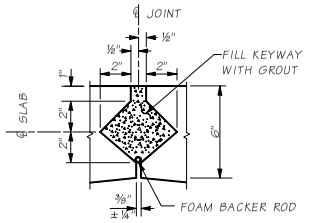

SECTION A 1
KEYWAY ALTERNATE 1

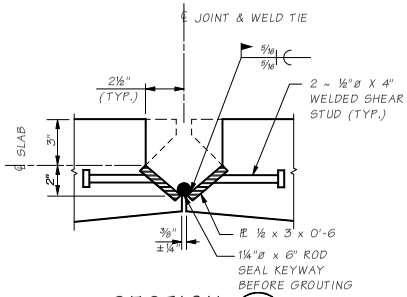

SECTION B 1
WELD TIE ALTERNATE #1

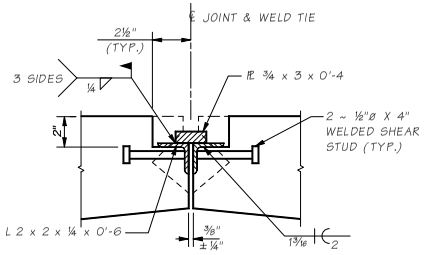

SECTION B 1
WELD TIE ALTERNATE #2

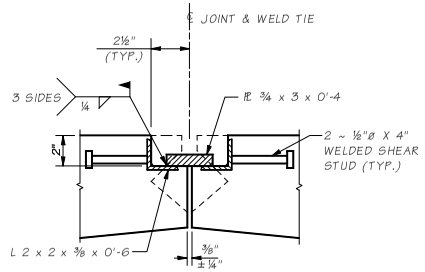

SECTION B 1
WELD TIE ALTERNATE #3

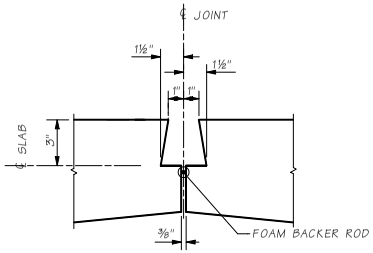

SECTION A 1
KEYWAY ALTENATE 2

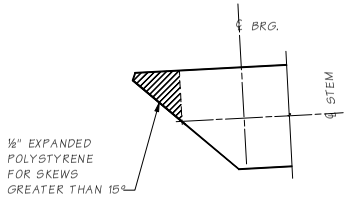

PLAN

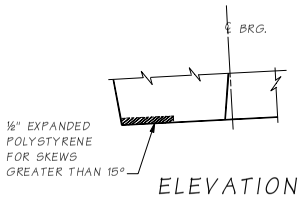

ELEVATION

STEM RECESS DETAIL

DESIGN TABLE

PLAN LENGTH (FT.)	NOMINAL SPAN CTR. TO CTR. BEARING (FT.)	HARP POINT (☐ x PLAN LENGTH)	NO. STRANDS	DIMENSION "W"	F ℄ (IN.)	DISTANCE "E" TO C.G.S. AT END BLOCK (IN.)	CONCRETE COMPRESSIVE STRENGTH		ESTIMATED DEFLECTION AT MIDSPAN (IN.)		
							INITIAL AT RELEASE (KSI)	FINAL AT 28 DAYS (KSI)	UPWARD AT TRANSFER OF PRESTRESS (Δ I)	FINAL UPWARD FOR RIBBED GIRDER ONLY (Δ 2000)	FINAL DOWNWARD DUE TO SUPER IMPOSED DEAD LOAD/Δ SDL)

Bridge Design Engr.	M:\STANDARDS\Girders\Double Tee Girders\DOUBLE TEE - 2.man									
Supervisor					REGION NO.	STATE	FED. AID PROJ. NO.		SHEET NO.	TOTAL SHEETS
Designed By					10	WASH.				
Checked By					JOB NUMBER					
Detailed By										
Bridge Projects Engr.										
Prelim. Plan By										
Architect/Specialist	DATE	REVISION	BY	APP'D						

BRIDGE AND STRUCTURES OFFICE

Washington State Department of Transportation

STANDARD PRESTRESSED CONCRETE GIRDERS

PRECAST PRESTRESSED DOUBLE T DETAILS 2 OF 2

BRIDGE SHEET NO.

SHEET OF SHEETS

SR JOB NO. SHEET

5.6-A23-2

Tue Feb 05 09:07:08 2008

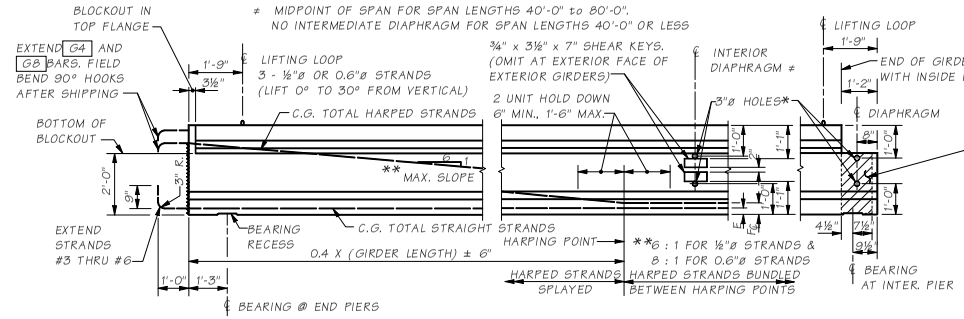

GIRDER ELEVATION

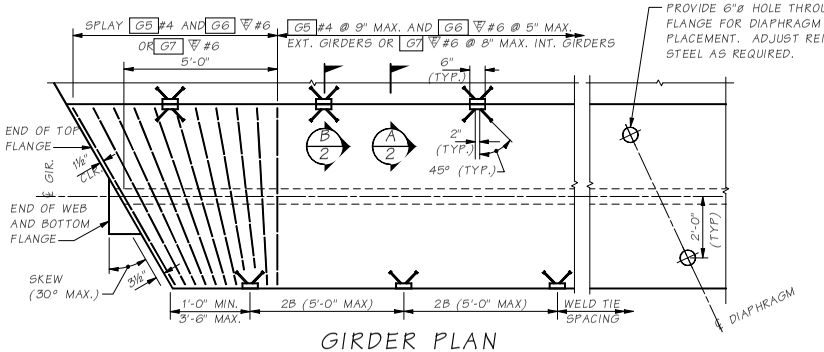

GIRDER PLAN

OMIT WELD TIES ON EXTERIOR EDGE OF EXTERIOR GIRDER. (STRANDS AND LONGITUDINAL BARS NOT SHOWN)

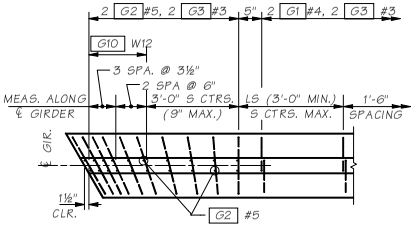

PLAN SECTION THROUGH GIRDER WEB

* OMIT HOLES AND PLACE INSERTS ON THE INTERIOR FACE OF EXTERIOR GIRDERS. PLACE HOLES AND INSERTS PARALLEL TO SKEW. INSERTS SHALL BE 1" BURKE HI-TENSILE, LANCASTER MALLEABLE, DAYTON-SUPERIOR F-62 FLARED THIN SLAB (1" x 4⅝") FERRULE INSERT OR APPROVED EQUAL. (TYP.)

GENERAL NOTES

1. ALL DETAILS SHOWN PERTAIN ONLY TO THE 35 INCH DEEP GIRDER WITH THE 6'-0" GIRDER WIDTH SHOWN.
2. FORMS FOR THE BEARING PAD RECESSES SHALL BE CONSTRUCTED AND FASTENED IN SUCH A MANNER SO AS TO NOT CAUSE DAMAGE TO THE GIRDERS DURING THE STRAND RELEASE OPERATION.
3. SPAN LENGTH SHALL BE INCREASED AS NECESSARY TO COMPENSATE FOR SHORTENING DUE TO PRESTRESS AND SHRINKAGE
4. ALL PRESTRESSING STRANDS SHALL BE ½ INCH OR 0.6 INCH ø LOW RELAXATION SEVEN WIRE STRAND, AASHTO M203 GR. 270. ALL MILD STEEL REINFORCING SHALL BE AASHTO M31 GR. 60. ALL STUDS SHALL CONFORM TO STD. SPEC. SECTION 9-06.15. ALL OTHER STEEL SHALL BE AASHTO M183 AND SHALL BE PAINTED WITH 2 COATS OF STATE FORMULA A-9-73.
5. CUT ALL STRANDS FLUSH WITH THE GIRDER ENDS EXCEPT FOR THOSE SHOWN TO BE EXTENDED, AND PAINT ENDS OF FLUSH STRANDS WITH AN APPROVED EPOXY RESIN.
6. AFTER ERECTION, CUT OFF LIFTING LOOPS 1 INCH BELOW THE TOP OF THE FLANGE AND FILL WITH AN APPROVED GROUT PRIOR TO PLACING OF THE OVERLAY. ALL LIFTING STRANDS ARE TO BE OF THE SAME MATERIAL AND STRENGTH AS THE PRESTRESSING STRANDS. WRAP LIFTING LOOPS SO THAT EACH STRAND WILL CARRY IT'S SHARE OF THE TOTAL LOAD. EXTEND LIFTING LOOPS WITH 9 INCH LONG 90° HOOKS TO WITHIN 3 INCHES CLEAR OF THE BOTTOM OF THE GIRDER.

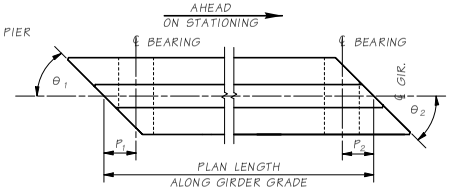

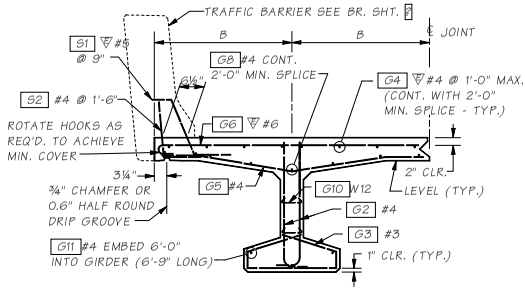

EXTERIOR GIRDER REINFORCING NEAR GIRDER END

FOR DETAILS NOT SHOWN, SEE INTERIOR GIRDER

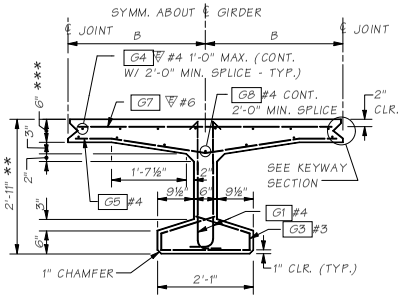

INTERIOR GIRDER REINFORCING NEAR MIDSPAN

*** THICKEN FLANGE TO COMPENSATE FOR SUPERELEVATION.

▽ DENOTES EPOXY COATED

△△ #3 OR #4 BARS MAY BE USED IN LIEU OF W12. FIELD BEND IS OPTIONAL.

MARK	LOCATION	SIZE	BENDING DIAGRAM (ALL DIMENSIONS ARE OUT TO OUT)
G1	GIRDER STIRRUPS	4	
G2	GIRDER END STIRRUPS	5	
G3	BOTTOM FLANGE	3	
G4	TOP OF TOP FLANGE - LONGIT.	▽4 STR.	
G5	BOT. OF TOP FLANGE - TRANSV.	4	
G6	TOP TRANSV. - EXT. GIRDER	▽6	
G7	TOP TRANSV. - INT. GIRDER	▽6 STR.	
G8	BOT. OF TOP FLANGE - LONGIT.	4 STR.	
G10	GIRDER END TIES	W12 △△	
G11	GIRDER LONGIT.	6 STR.	
S1	T.B. TO DECK TIE	▽5	
S2	T.B. TO DECK TIE	4	

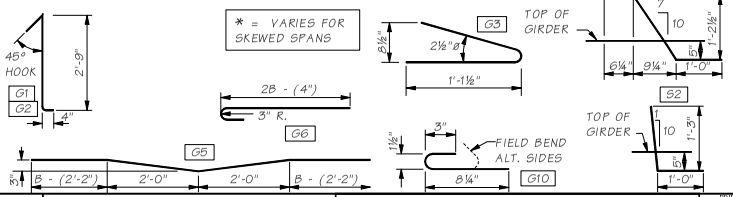

Bridge Design Engr.	M:\STANDARDS\Girders\Deck Bulb Tee\W35DG1.man								
Supervisor					REGION NO.	STATE	FED. AID PROJ. NO.	SHEET NO.	TOTAL SHEETS
Designed By					10	WASH.			
Checked By					JOB NUMBER				
Detailed By									
Bridge Projects Engr.									
Prelim. Plan By									
Architect/Specialist	DATE	REVISION	BY	APP'D					

BRIDGE AND STRUCTURES OFFICE

Washington State Department of Transportation

STANDARD PRESTRESSED CONCRETE GIRDERS

W35DG DECK BULB TEE GIRDER DETAILS 1 OF 2

BRIDGE SHEET NO. | SHEET | OF | SHEETS

SR | JOB NO. | SHEET | 5.6-A24-1

Tue Feb 05 09:08:28 2008

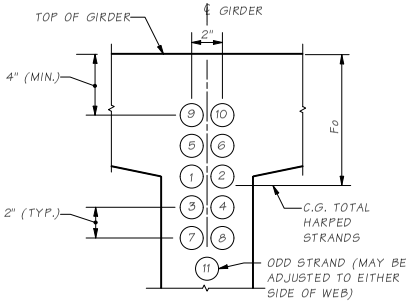

STRAND PATTERN AT GIRDER END

HARPED STRAND LOCATION SEQUENCE SHALL BE AS SHOWN (1), (2) ETC.

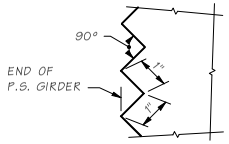

SAWTEETH DETAILS

SAWTEETH ARE FULL WIDTH - USE SAWTEETH KEYS FROM BOTTOM OF BOTTOM FLANGE TO BOTTOM OF LOWEST HARPED STRAND

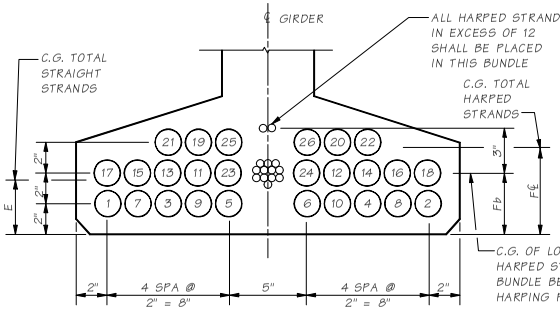

STRAND PATTERN AT ℄ SPAN

STRAND LOCATION SEQUENCE SHALL BE AS SHOWN (1), (2) ETC.

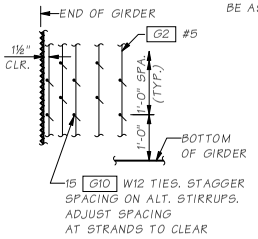

TIE SPACING DETAIL

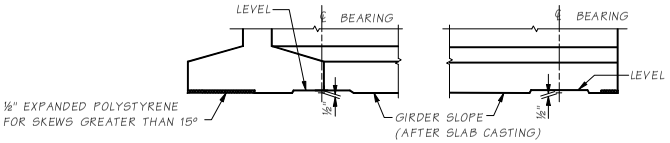

ELEVATION

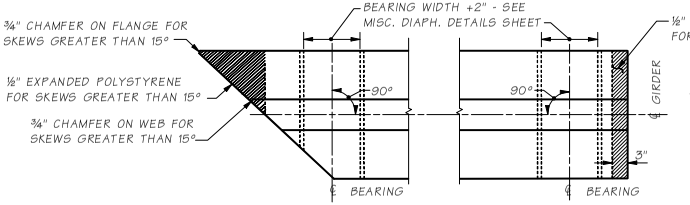

PLAN - BEARING RECESS & BOTTOM FLANGE SPALL PROTECTION

** THICKEN FLANGE TO COMPENSATE FOR CAMBER DUE TO PRESTRESS. FLANGE THICKNESS SHOWN IS @ ℄ OF SPAN. FOR FLANGE THINCKNESS ALONG GIRDER SEE GIRDER FLANGE THICKENING DETAILS ON BR. SHEET ☐. GIRDERS WITH ULTIMATE CAMBER VALUES SMALLER THAN ¾" ARE EXEMPT FROM THIS REQUIREMENT. FLANGE THICKENING SHALL BE USED ONLY IF NEEDED BY DESIGN.

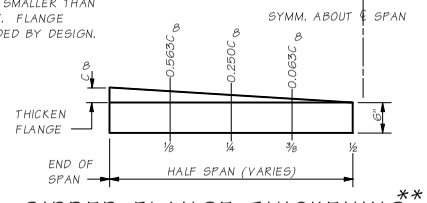

GIRDER FLANGE THICKENING**

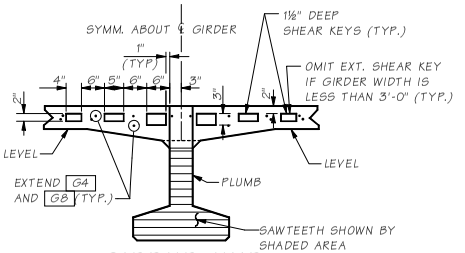

GIRDER END

AT END PIERS

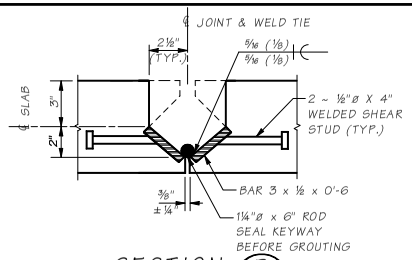

SECTION B 1
WELD TIE ALTERNATE #1

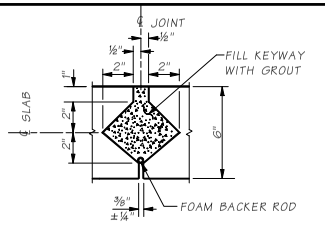

SECTION A 1
KEYWAY

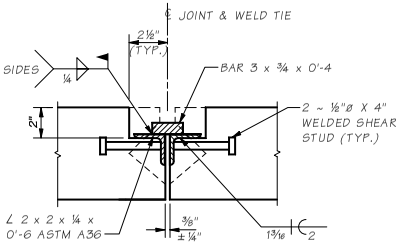

SECTION B 1
WELD TIE ALTERNATE #2

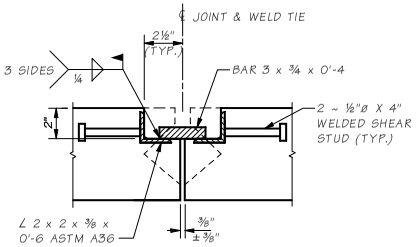

SECTION B 1
WELD TIE ALTERNATE #3

* The number of harped strands should not exceed ½ of the number of straight strands.

NOTE: Dimensions shall be shown in Imperial units to the nearest ⅛th inch.

GIRDER SCHEDULE

SPAN	GIRDER	END 1	END 2	S	LS	θ_1	θ_2	P_1	P_2	PLAN LENGTH (ALONG GIRDER GRADE)	MIN. CONC. COMPR. STRENGTH @ FINAL f'_c KSI	MIN. CONC. COMPR. STRENGTH @ RELEASE f'_{ci} KSI	HARPED NO. OF STRANDS	HARPED JACKING FORCE (KIPS)	STRAIGHT NO. OF STRANDS	STRAIGHT JACKING FORCE (KIPS)	LOCATION OF C.G. STRANDS E	LOCATION OF C.G. STRANDS F℄	LOCATION OF C.G. STRANDS Fb	LOCATION OF C.G. STRANDS Fo	CAMBER RELEASE ◁	CAMBER 30 ◁	CAMBER 2000 ◁
-	-	-	-	-	-	-	-	-	-	-	-	-	-	-	-	-	-	-	-	-	-	-	-

Bridge Design Engr.	M:\STANDARDS\Girders\Deck Bulb Tee\W35DG2.man								
Supervisor									
Designed By									
Checked By									
Detailed By									
Bridge Projects Engr.									
Prelim. Plan By									
Architect/Specialist	DATE	REVISION	BY	APP'D					

REGION NO.	STATE	FED. AID PROJ. NO.	SHEET NO.	TOTAL SHEETS
10	WASH.			
JOB NUMBER				

BRIDGE AND STRUCTURES OFFICE

Washington State Department of Transportation

STANDARD PRESTRESSED CONCRETE GIRDERS

W35DG DECK BULB TEE GIRDER DETAILS 2 OF 2

BRIDGE SHEET NO. | SHEET | OF | SHEETS

JOB NO. SK 5.6-A24-2

Tue Feb 05 09:08:34 2008

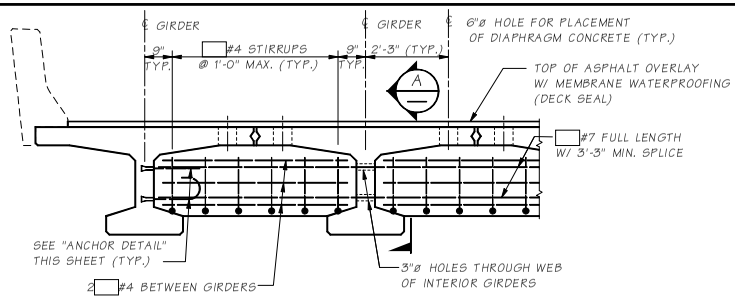

ELEVATION - TYPICAL END DIAPHRAGM AT INTERMEDIATE PIERS

CONCRETE CLASS 4000, CAST IN PLACE

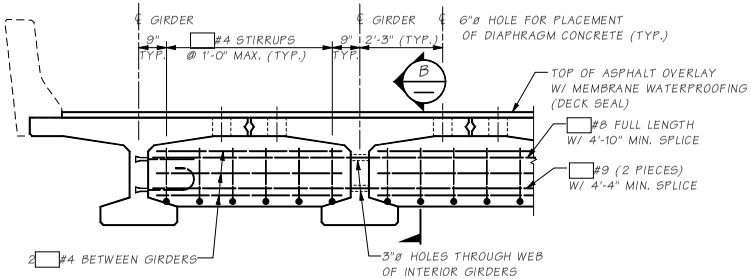

ELEVATION - TYPICAL INTERMEDIATE DIAPHRAGM

CONCRETE CLASS 4000, CAST IN PLACE

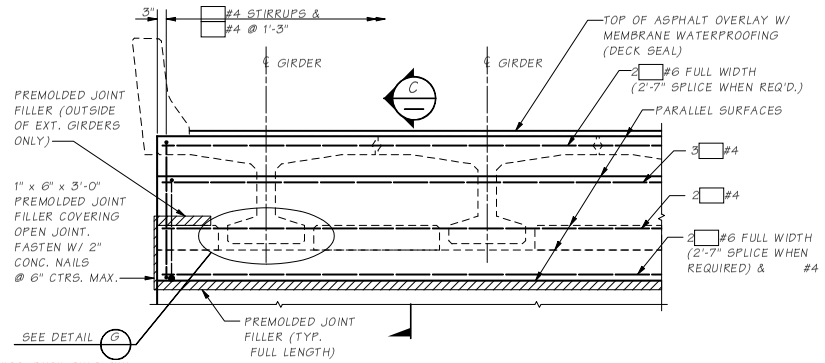

MISC. DECK BULB TEE DIAPHRAGM DETAILS SHEET

ELEVATION - TYPICAL END DIAPHRAGM AT END PIERS

CONCRETE CLASS 4000, CAST IN PLACE

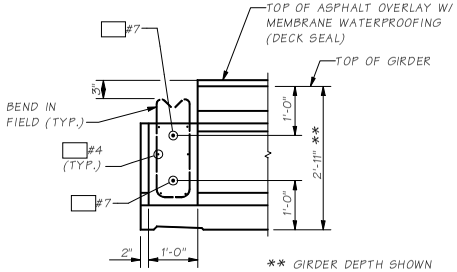

SECTION A

LONGIT. DIMENSIONS ARE NORMAL TO SKEW

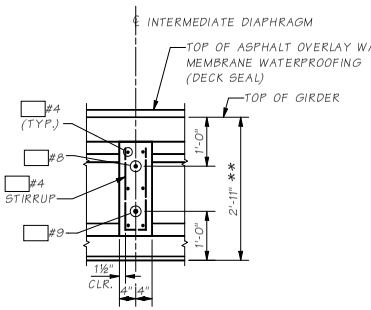

SECTION B

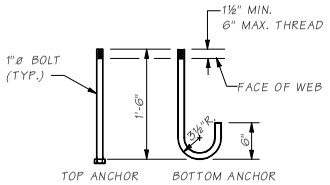

ANCHOR DETAIL

A.S.T.M. A-307

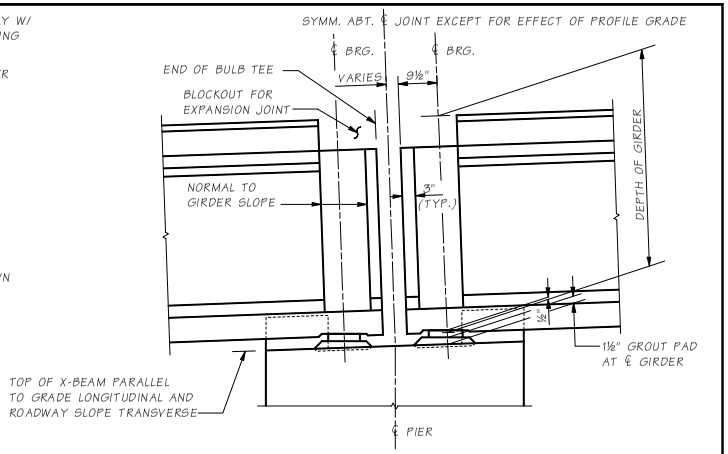

END DIAPHRAGMS AT INTERMEDIATE PIER

LONGITUDINAL DIMENSIONS ARE NORMAL TO PIER

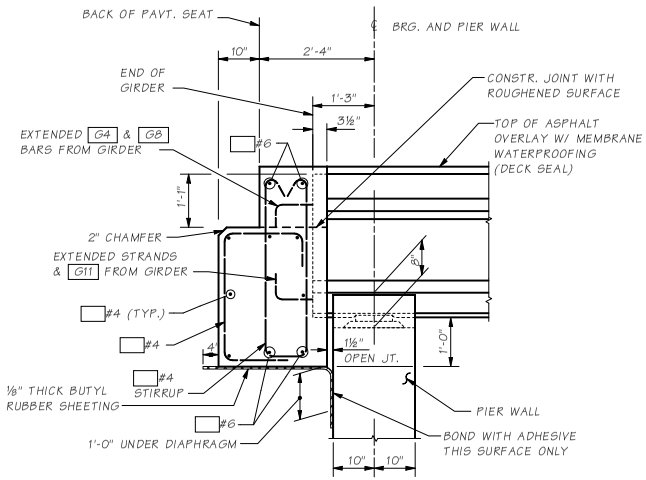

SECTION C

ALL LONGITUDINAL DIMENSIONS SHOWN ARE NORMAL TO ℄ BRG.

Bridge Design Engr.	M:\STANDARDS\Girders\Deck Bulb Tee\W35DG DIA.man				REGION No.	STATE	FED. AID PROJ. NO.	SHEET No.	TOTAL SHEETS
Supervisor					10	WASH.			
Designed By									
Checked By					JOB NUMBER				
Detailed By									
Bridge Projects Engr.									
Prelim. Plan By									
Architect/Specialist	DATE	REVISION	BY	APP'D					

BRIDGE AND STRUCTURES OFFICE

Washington State Department of Transportation

STANDARD PRESTRESSED CONCRETE GIRDERS

W35DG DECK BULB TEE DIAPHRAGM DETAILS

BRIDGE SHEET NO.

SHEET OF SHEETS

SR JOB NO. SHEET

5.6-A24-3

Tue Feb 05 09:08:40 2008

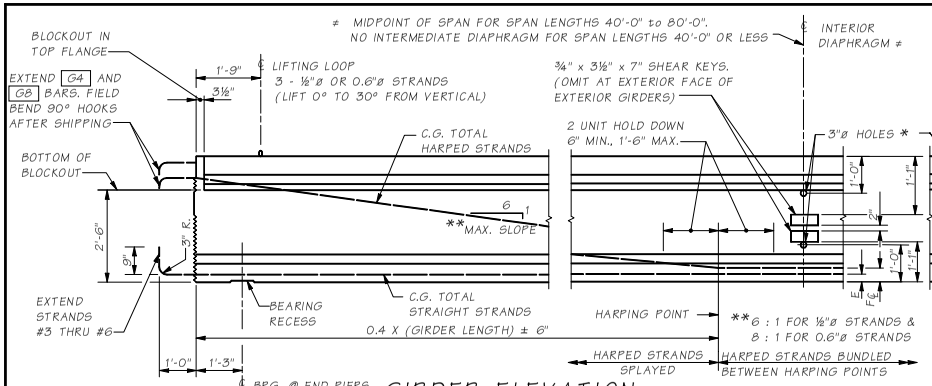

GIRDER ELEVATION

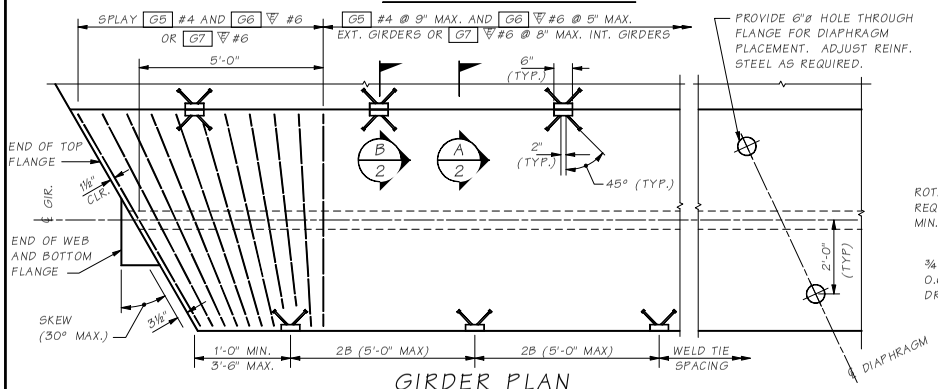

GIRDER PLAN

OMIT WELD TIES ON EXTERIOR EDGE OF EXTERIOR GIRDER. (STRANDS AND LONGITUDINAL BARS NOT SHOWN)

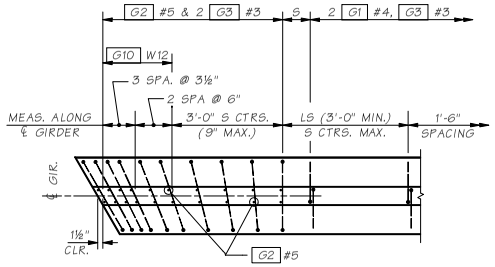

PLAN SECTION THROUGH GIRDER WEB

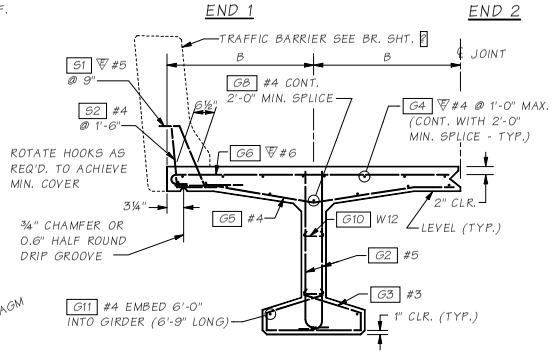

EXTERIOR GIRDER REINFORCING NEAR GIRDER END

FOR DETAILS NOT SHOWN, SEE INTERIOR GIRDER

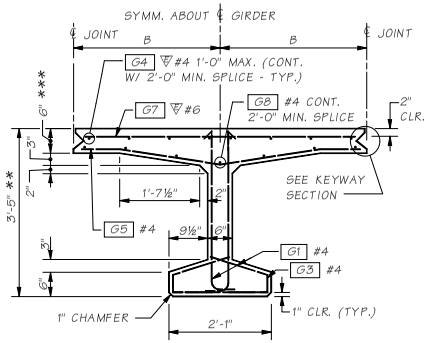

INTERIOR GIRDER REINFORCING NEAR MIDSPAN

*** THICKEN FLANGE TO COMPENSATE FOR SUPERELEVATION.

▽ DENOTES EPOXY COATED

△△ #3 OR #4 BARS MAY BE USED IN LIEU OF W12. FIELD BEND IS OPTIONAL.

MARK	LOCATION	SIZE	
G1	GIRDER STIRRUPS	4	
G2	GIRDER END STIRRUPS	5	
G3	BOTTOM FLANGE	3	
G4	TOP OF TOP FLANGE - LONGIT.	▽4	STR.
G5	BOT. OF TOP FLANGE - TRANSV.	4	
G6	TOP TRANSV. - EXT. GIRDER	▽6	
G7	TOP TRANSV. - INT. GIRDER	▽6	STR.
G8	BOT. OF TOP FLANGE - LONGIT.	4	STR.
G10	GIRDER END TIES	W12	△△
G11	GIRDER LONGIT.	6	STR.
S1	T.B. TO DECK TIE	▽5	
S2	T.B. TO DECK TIE	4	

BENDING DIAGRAM (ALL DIMENSIONS ARE OUT TO OUT)

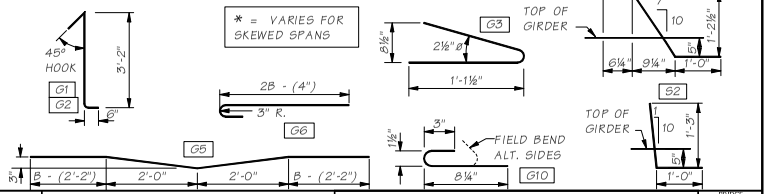

GENERAL NOTES

1. ALL DETAILS SHOWN PERTAIN ONLY TO THE 41 INCH DEEP GIRDER WITH THE 6'-0" GIRDER WIDTH SHOWN.
2. FORMS FOR THE BEARING PAD RECESSES SHALL BE CONSTRUCTED AND FASTENED IN SUCH A MANNER SO AS TO NOT CAUSE DAMAGE TO THE GIRDERS DURING THE STRAND RELEASE OPERATION.
3. SPAN LENGTH SHALL BE INCREASED AS NECESSARY TO COMPENSATE FOR SHORTENING DUE TO PRESTRESS AND SHRINKAGE
4. ALL PRESTRESSING STRANDS SHALL BE ½ INCH OR 0.6 INCH ø LOW RELAXATION SEVEN WIRE STRAND, AASHTO M203 GR. 270. ALL MILD STEEL REINFORCING SHALL BE AASHTO M31 GR. 60. ALL STUDS SHALL CONFORM TO STD. SPEC. SECTION 9-06.15. ALL OTHER STEEL SHALL BE AASHTO M183 AND SHALL BE PAINTED WITH 2 COATS OF STATE FORMULA A-9-73.
5. CUT ALL STRANDS FLUSH WITH THE GIRDER ENDS EXCEPT FOR THOSE SHOWN TO BE EXTENDED, AND PAINT ENDS OF FLUSH STRANDS WITH AN APPROVED EPOXY RESIN.
6. AFTER ERECTION, CUT OFF LIFTING LOOPS 1 INCH BELOW THE TOP OF THE FLANGE AND FILLWITH AN APPROVED GROUT PRIOR TO PLACING OF THE OVERLAY. ALL LIFTING STRANDS ARE TO BE OF THE SAME MATERIAL AND STRENGTH AS THE PRESTRESSING STRANDS. WRAP LIFTING LOOPS SO THAT EACH STRAND WILL CARRY IT'S SHARE OF THE TOTAL LOAD. EXTEND LIFTING LOOPS WITH 9 INCH LONG 90° HOOKS TO WITHIN 3 INCHES CLEAR OF THE BOTTOM OF THE GIRDER.

Bridge Design Engr.	M:\STANDARDS\Girders\Deck Bulb Tee\W41DG1.man								
Supervisor					REGION NO.	STATE	FED. AID PROJ. NO.	SHEET NO.	TOTAL SHEETS
Designed By					10	WASH.			
Checked By					JOB NUMBER				
Detailed By									
Bridge Projects Engr.									
Prelim. Plan By									
Architect/Specialist	DATE	REVISION	BY	APP'D					

BRIDGE AND STRUCTURES OFFICE

Washington State Department of Transportation

STANDARD PRESTRESSED CONCRETE GIRDERS

W41DG DECK BULB TEE GIRDER DETAILS 1 OF 2

BRIDGE SHEET NO. | SHEET | OF | SHEETS

SR JOB NO. SHEET 5.6-A25-1

Tue Feb 05 09:08:47 2008

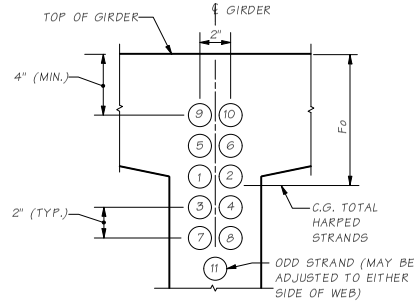

STRAND PATTERN AT GIRDER END

HARPED STRAND LOCATION SEQUENCE SHALL BE AS SHOWN (1), (2) ETC.

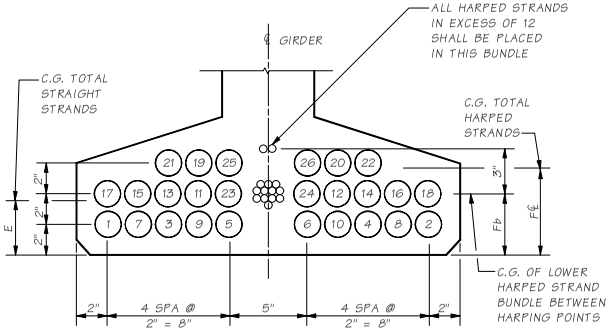

STRAND PATTERN AT ℄ SPAN

STRAND LOCATION SEQUENCE SHALL BE AS SHOWN (1), (2) ETC.

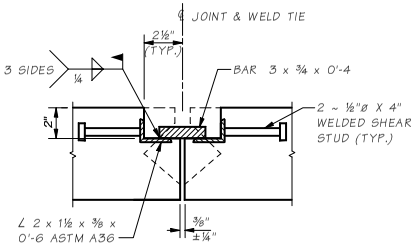

SECTION B 1
WELD TIE ALTERNATE #3

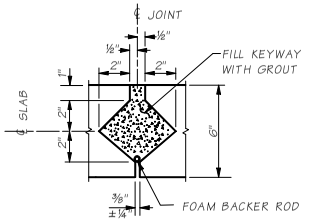

SECTION A 1
KEYWAY

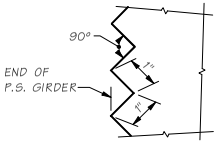

SAWTEETH DETAILS

SAWTEETH ARE FULL WIDTH - USE SAWTEETH KEYS FROM BOTTOM OF BOTTOM FLANGE TO BOTTOM OF LOWEST HARPED STRAND

**THICKEN FLANGE TO COMPENSATE FOR CAMBER DUE TO PRESTRESS. FLANGE THICKNESS SHOWN IS @ ℄ OF SPAN. FOR FLANGE THINCKNESS ALONG GIRDER SEE GIRDER FLANGE THICKENING DETAILS ON BR. SHEET ☐. GIRDERS WITH ULTIMATE CAMBER VALUES SMALLER THAN ¾" ARE EXEMPT FROM THIS REQUIREMENT. FLANGE THICKENING SHALL BE USED ONLY IF NEEDED BY DESIGN.

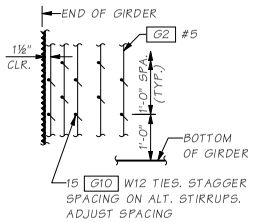

TIE SPACING DETAIL

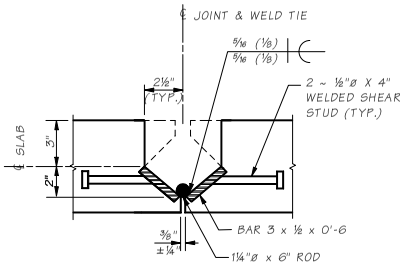

SECTION B 1
WELD TIE ALTERNATE #1

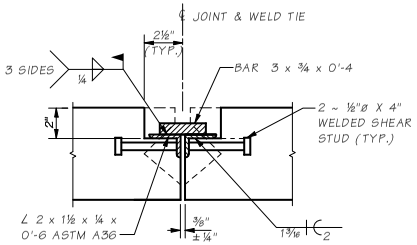

SECTION B 1
WELD TIE ALTERNATE #2

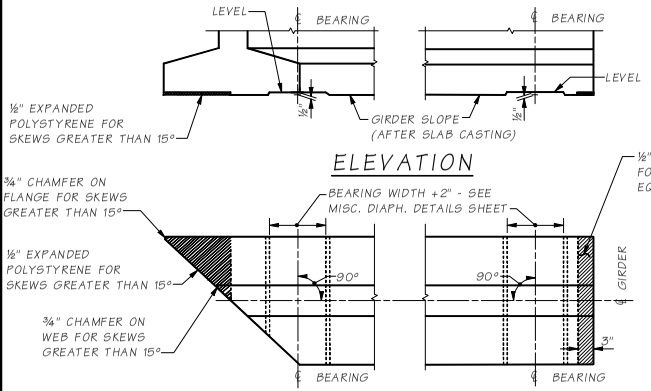

PLAN - BEARING RECESS & BOTTOM FLANGE SPALL PROTECTION

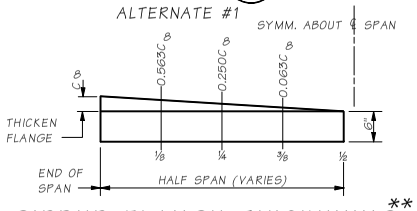

GIRDER FLANGE THICKENING**

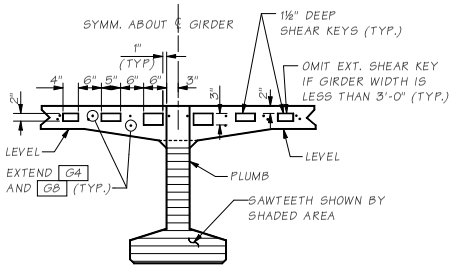

GIRDER END
AT END PIERS

NOTE: Dimensions shall be shown in Imperial units to the nearest ⅛th inch.

* The number of harped strands should not exceed ½ of the number of straight strands.

GIRDER SCHEDULE

SPAN	GIRDER	END 1	END 2	S	LS	θ_1	θ_2	P_1	P_2	PLAN LENGTH (ALONG GIRDER GRADE)	MIN. CONC. COMPR. STRENGTH @ FINAL F'C KSI	MIN. CONC. COMPR. STRENGTH @ RELEASE F'CI KSI	HARPED NO. OF STRANDS	HARPED JACKING FORCE (KIPS)	STRAIGHT NO. OF STRANDS	STRAIGHT JACKING FORCE (KIPS)	LOCATION OF C.G. STRANDS E	LOCATION OF C.G. STRANDS F℄	LOCATION OF C.G. STRANDS Fb	LOCATION OF C.G. STRANDS Fo	CAMBER RELEASE △	CAMBER 30 △	CAMBER 2000 △
-	-	-	-	-	-	-	-	-	-	-	-	-	-	-	-	-	-	-	-	-	-	-	-

Bridge Design Engr.	M:\STANDARDS\Girders\Deck Bulb Tee\W41DG2.man						
Supervisor							
Designed By							
Checked By							
Detailed By							
Bridge Projects Engr.							
Prelim. Plan By							
Architect/Specialist	DATE	REVISION	BY	APP'D			

REGION NO.	STATE	FED. AID PROJ. NO.	SHEET NO.	TOTAL SHEETS
10	WASH			
JOB NUMBER				

BRIDGE AND STRUCTURES OFFICE

Washington State Department of Transportation

STANDARD PRESTRESSED CONCRETE GIRDERS

W41DG DECK BULB TEE GIRDER DETAILS 2 OF 2

BRIDGE SHEET NO. SHEET OF SHEETS

JOB NO. SHEET SR 5.6-A25-2

Tue Feb 05 09:08:55 2008

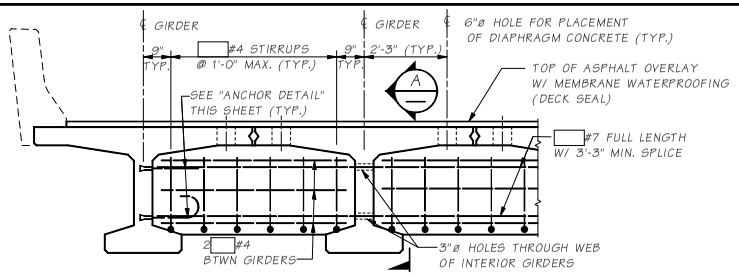

ELEVATION - TYPICAL END DIAPHRAGM AT INTERMEDIATE PIERS

CONCRETE CLASS 4000, CAST IN PLACE

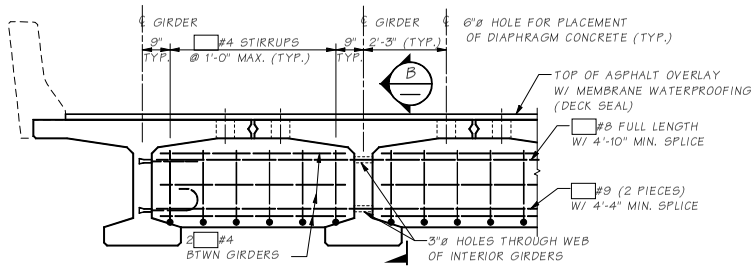

ELEVATION - TYPICAL INTERMEDIATE DIAPHRAGM

CONCRETE CLASS 4000, CAST IN PLACE

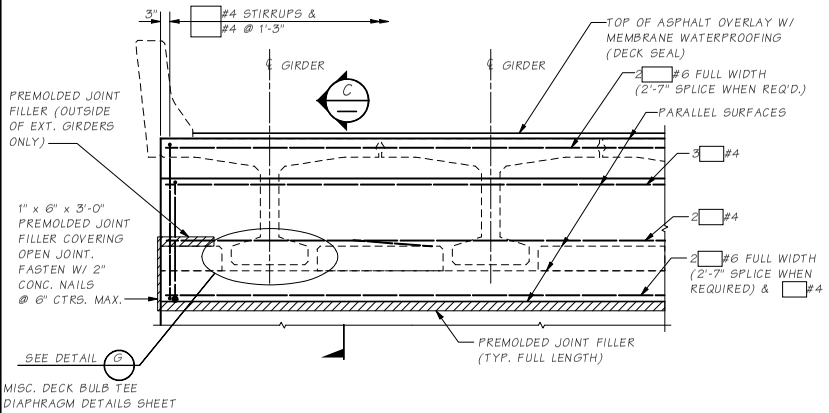

ELEVATION - TYPICAL END DIAPHRAGM AT END PIERS

CONCRETE CLASS 4000, CAST IN PLACE

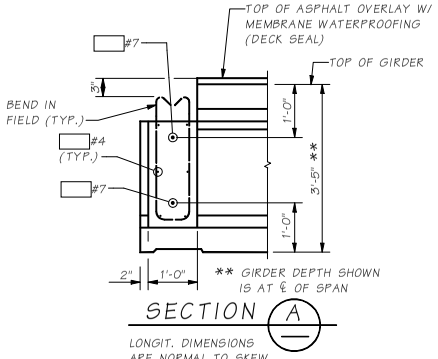

SECTION A

LONGIT. DIMENSIONS ARE NORMAL TO SKEW

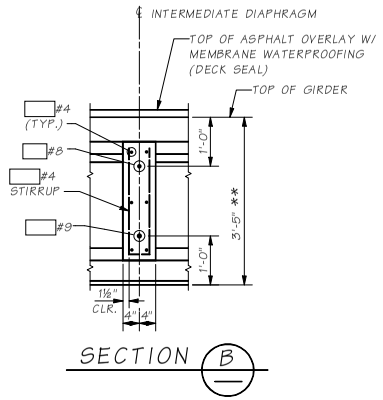

SECTION B

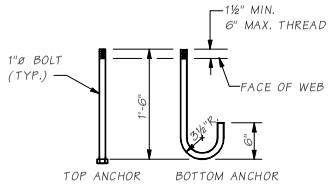

ANCHOR DETAIL

A.S.T.M. A-307

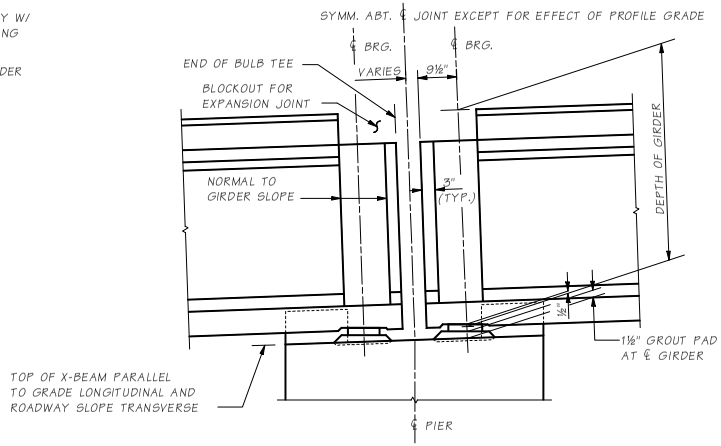

END DIAPHRAGMS AT INTERMEDIATE PIER

LONGITUDINAL DIMENSIONS ARE NORMAL TO PIER

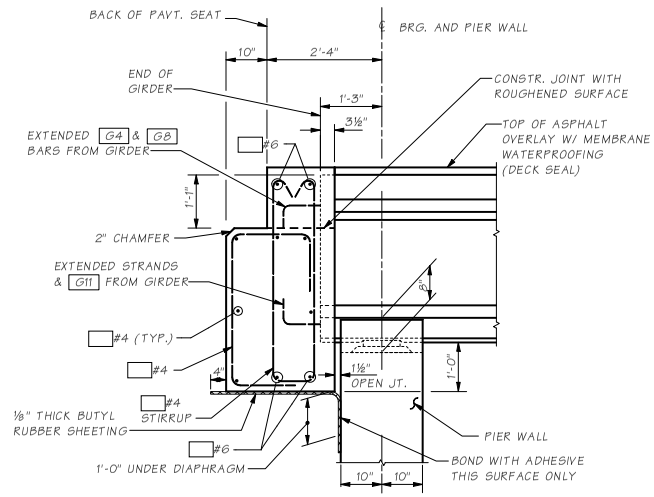

SECTION C

ALL LONGITUDINAL DIMENSIONS SHOWN ARE NORMAL TO ℄ BRG.

Bridge Design Engr.	M:\STANDARDS\Girders\Deck Bulb Tee\W41DG DIAPHRAGMS.man								
Supervisor						REGION NO.	STATE	FED. AID PROJ. NO.	SHEET NO.	TOTAL SHEETS
Designed By						10	WASH.			
Checked By						JOB NUMBER				
Detailed By										
Bridge Projects Engr.										
Prelim. Plan By										
Architect/Specialist	DATE	REVISION		BY	APP'D					

BRIDGE AND STRUCTURES OFFICE

Washington State Department of Transportation

STANDARD PRESTRESSED CONCRETE GIRDERS

W41DG DECK BULB TEE GIRDER DIAPHRAGM DETAILS

BRIDGE SHEET NO. SHEET OF SHEETS

SR JOB NO. SHEET 5.6-A25-3

Tue Feb 05 09:09:03 2008

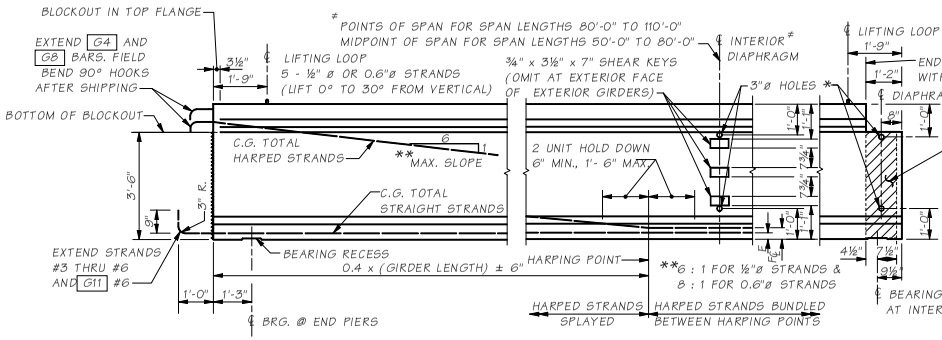

GIRDER ELEVATION

* OMIT HOLES AND PLACE INSERTS ON THE INTERIOR FACE OF EXTERIOR GIRDERS. PLACE HOLES AND INSERTS PARALLEL TO SKEW. INSERTS SHALL BE 1" BURKE HI-TENSILE, LANCASTER MALLEABLE, DAYTON-SUPERIOR F-62 FLARED THIN SLAB (1" x 4½") FERRULE INSERT OR APPROVED EQUAL. (TYP.)

GENERAL NOTES

1. ALL DETAILS SHOWN PERTAIN ONLY TO THE 53 INCH DEEP GIRDER WITH THE 6'-0" GIRDER WIDTH SHOWN.
2. FORMS FOR THE BEARING PAD RECESSES SHALL BE CONSTRUCTED AND FASTENED IN SUCH A MANNER SO AS TO NOT CAUSE DAMAGE TO THE GIRDERS DURING THE STRAND RELEASE OPERATION.
3. SPAN LENGTH SHALL BE INCREASED AS NECESSARY TO COMPENSATE FOR SHORTENING DUE TO PRESTRESS AND SHRINKAGE
4. ALL PRESTRESSING STRANDS SHALL BE ½ INCH OR 0.6 INCH ø LOW RELAXATION SEVEN WIRE STRAND, AASHTO M203 GR. 270. ALL MILD STEEL REINFORCING SHALL BE AASHTO M31 GR. 60. ALL STUDS SHALL CONFORM TO STD. SPEC. SECTION 9-06.15. ALL OTHER STEEL SHALL BE AASHTO M183 AND SHALL BE PAINTED WITH 2 COATS OF STATE FORMULA A-9-73.
5. CUT ALL STRANDS FLUSH WITH THE GIRDER ENDS EXCEPT FOR THOSE SHOWN TO BE EXTENDED, AND PAINT ENDS OF FLUSH STRANDS WITH AN APPROVED EPOXY RESIN.
6. AFTER ERECTION, CUT OFF LIFTING LOOPS 1 INCH BELOW THE TOP OF THE FLANGE AND FILL WITH AN APPROVED GROUT PRIOR TO PLACING OF THE OVERLAY. ALL LIFTING STRANDS ARE TO BE OF THE SAME MATERIAL AND STRENGTH AS THE PRESTRESSING STRANDS. WRAP LIFTING LOOPS SO THAT EACH STRAND WILL CARRY IT'S SHARE OF THE TOTAL LOAD. EXTEND LIFTING LOOPS WITH 9 INCH LONG 90° HOOKS TO WITHIN 3 INCHES CLEAR OF THE BOTTOM OF THE GIRDER.

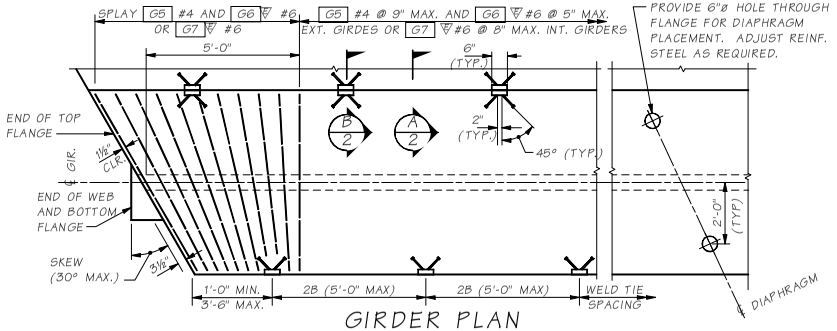

GIRDER PLAN

OMIT WELD TIES ON EXTERIOR EDGE OF EXTERIOR GIRDER.
(STRANDS AND LONGITUDINAL BARS NOT SHOWN)

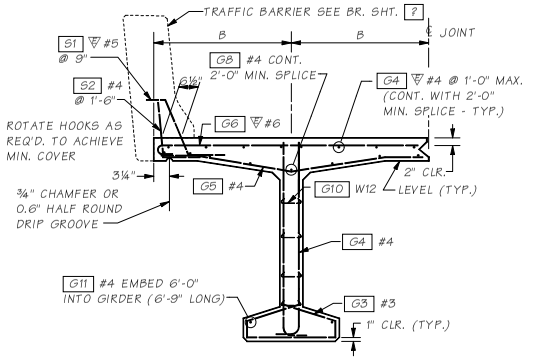

EXTERIOR GIRDER REINFORCING NEAR GIRDER END

FOR DETAILS NOT SHOWN, SEE INTERIOR GIRDER

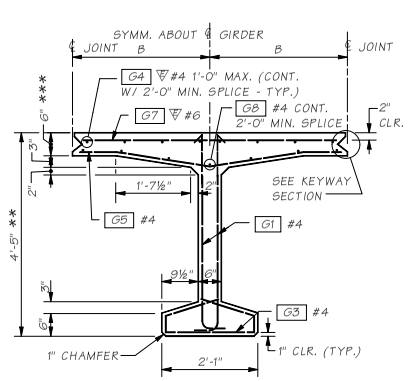

INTERIOR GIRDER REINFORCING NEAR MIDSPAN

*** THICKEN FLANGE TO COMPENSATE FOR SUPERELEVATION.

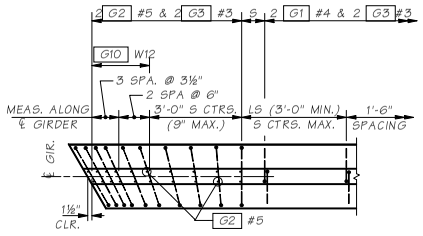

PLAN SECTION THROUGH GIRDER WEB

MARK	LOCATION	SIZE	BENDING DIAGRAM (ALL DIMENSIONS ARE OUT TO OUT)
G1	GIRDER STIRRUPS	4	ΔΔ #3 OR #4 BARS MAY BE USED IN LIEU OF W12. FIELD BEND IS OPTIONAL.
G2	GIRDER END STIRRUPS	5	
G3	BOTTOM FLANGE	3	
G4	TOP OF TOP FLANGE - LONGIT.	▽4 STR.	
G5	BOT. OF TOP FLANGE - TRANSV.	4	
G6	TOP TRANSV. - EXT. GIRDER	▽6	
G7	TOP TRANSV. - INT. GIRDER	▽6 STR.	
G8	BOT. OF TOP FLANGE - LONGIT.	4 STR.	
G10	GIRDER END TIES	W12 ΔΔ	
G11	GIRDER LONGIT.	6 STR.	
S1	T.B. TO DECK TIE	▽5	
S2	T.B. TO DECK TIE	4	

▽ DENOTES EPOXY COATED

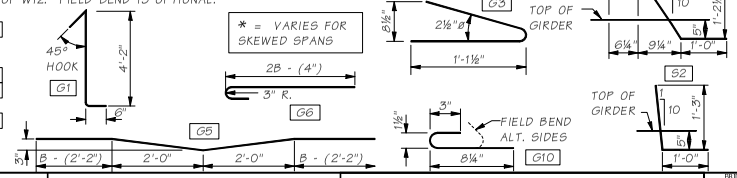

Bridge Design Engr.	M:\STANDARDS\Girders\Deck Bulb Tee\W53DG1.man			REGION NO.	STATE	FED. AID PROJ. NO.	SHEET NO.	TOTAL SHEETS
Supervisor				10	WASH.			
Designed By				JOB NUMBER				
Checked By								
Detailed By								
Bridge Projects Engr.								
Prelim. Plan By								
Architect/Specialist	DATE	REVISION	BY	APPD				

BRIDGE AND STRUCTURES OFFICE

Washington State Department of Transportation

STANDARD PRESTRESSED CONCRETE GIRDERS

W53DG DECK BULB TEE GIRDER DETAILS 1 OF 2

BRIDGE SHEET NO. — SHEET OF SHEETS

JOB NO. SHEET SR 5.6-A26-1

Tue Feb 05 09:09:09 2008

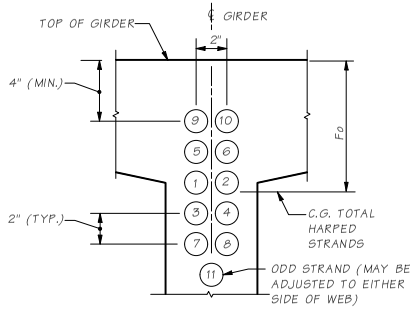

STRAND PATTERN AT GIRDER END

HARPED STRAND LOCATION SEQUENCE SHALL BE AS SHOWN (1), (2) ETC.

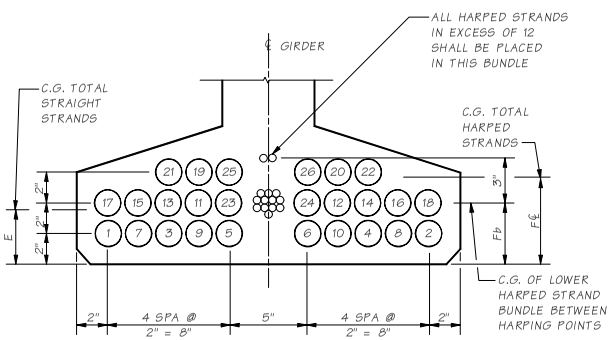

STRAND PATTERN AT ℄ SPAN

STRAND LOCATION SEQUENCE SHALL BE AS SHOWN (1), (2) ETC.

** THICKEN FLANGE TO COMPENSATE FOR CAMBER DUE TO PRESTRESS. FLANGE THICKNESS SHOWN IS @ ℄ OF SPAN. FOR FLANGE THICKNESS ALONG GIRDER SEE GIRDER FLANGE THICKENING DETAILS ON BR. SHEET ____. GIRDERS WITH ULTIMATE CAMBER VALUES SMALLER THAN ¾" ARE EXEMPT FROM THIS REQUIREMENT. FLANGE THICKENING SHALL BE USED ONLY IF NEEDED BY DESIGN.

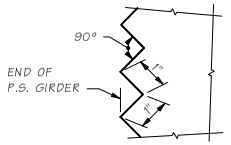

SAWTEETH DETAILS

SAWTEETH ARE FULL WIDTH - USE SAWTEETH KEYS FROM BOTTOM OF BOTTOM FLANGE TO BOTTOM OF LOWEST HARPED STRAND

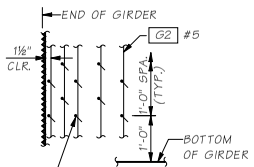

TIE SPACING DETAIL

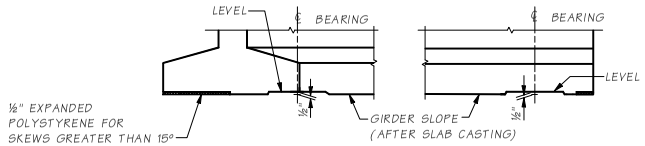

ELEVATION

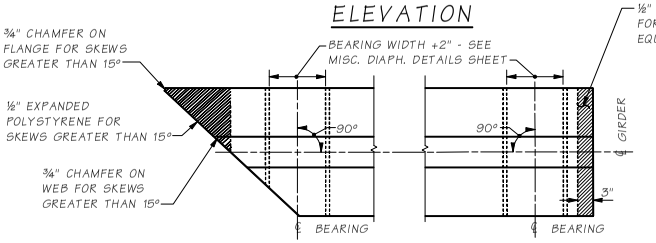

PLAN - BEARING RECESS & BOTTOM FLANGE SPALL PROTECTION

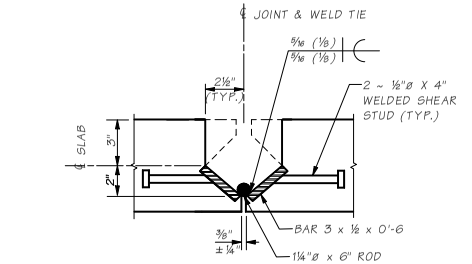

SECTION B 1 WELD TIE ALTERNATE #1

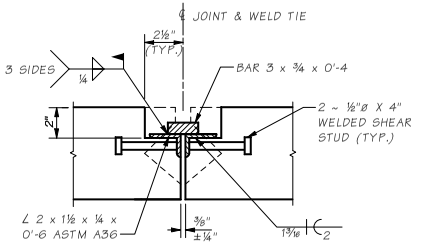

SECTION B 1 WELD TIE ALTERNATE #2

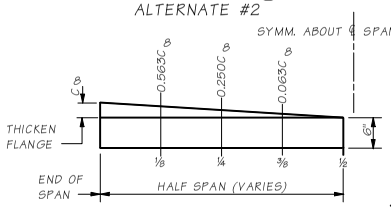

GIRDER FLANGE THICKENING**

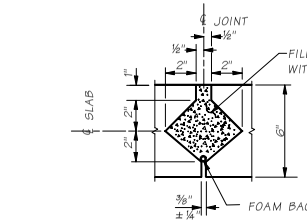

SECTION A 1 KEYWAY

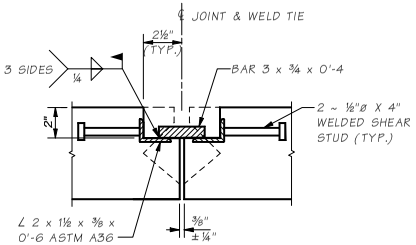

SECTION B 1 WELD TIE ALTERNATE #3

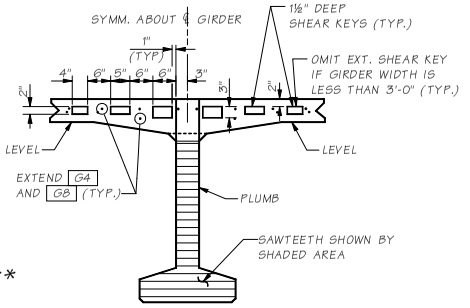

GIRDER END AT END PIERS

NOTE: Dimensions shall be shown in imperial units to the nearest ⅛th inch.

* The number of harped strands should not exceed ½ of the number of straight strands.

GIRDER SCHEDULE

SPAN	GIRDER	END 1	END 2	S	LS	θ1	θ2	P1	P2	PLAN LENGTH (ALONG GIRDER GRADE)	MIN. CONC. COMPR. STRENGTH @ FINAL F'C KSI	MIN. CONC. COMPR. STRENGTH @ RELEASE F'CI KSI	HARPED NO. OF STRANDS	HARPED JACKING FORCE (KIPS)	STRAIGHT NO. OF STRANDS	STRAIGHT JACKING FORCE (KIPS)	LOCATION OF C.G. STRANDS E	LOCATION OF C.G. STRANDS F℄	LOCATION OF C.G. STRANDS Fb	LOCATION OF C.G. STRANDS Fo	CAMBER (IN) RELEASE △	CAMBER (IN) 30 △	CAMBER (IN) 2000 △
-	-	-	-	-	-	-	-	-	-	-	-	-	-	-	-	-	-	-	-	-	-	-	-

Bridge Design Engr.	M:\STANDARDS\Girders\Deck Bulb Tee\W53DG2.man						
Supervisor							
Designed By							
Checked By							
Detailed By							
Bridge Projects Engr.							
Prelim. Plan By							
Architect/Specialist	DATE	REVISION	BY	APP'D			

REGION NO.	STATE	FED. AID PROJ. NO.	SHEET NO.	TOTAL SHEETS
10	WASH.			
JOB NUMBER				

BRIDGE AND STRUCTURES OFFICE

Washington State Department of Transportation

STANDARD PRESTRESSED CONCRETE GIRDERS

W53DG DECK BULB TEE GIRDER DETAILS 2 OF 2

BRIDGE SHEET NO.

SHEET ____ OF ____ SHEETS

SR ____ JOB NO. ____ SHEET

5.6-A26-2

Tue Feb 05 09:09:17 2008

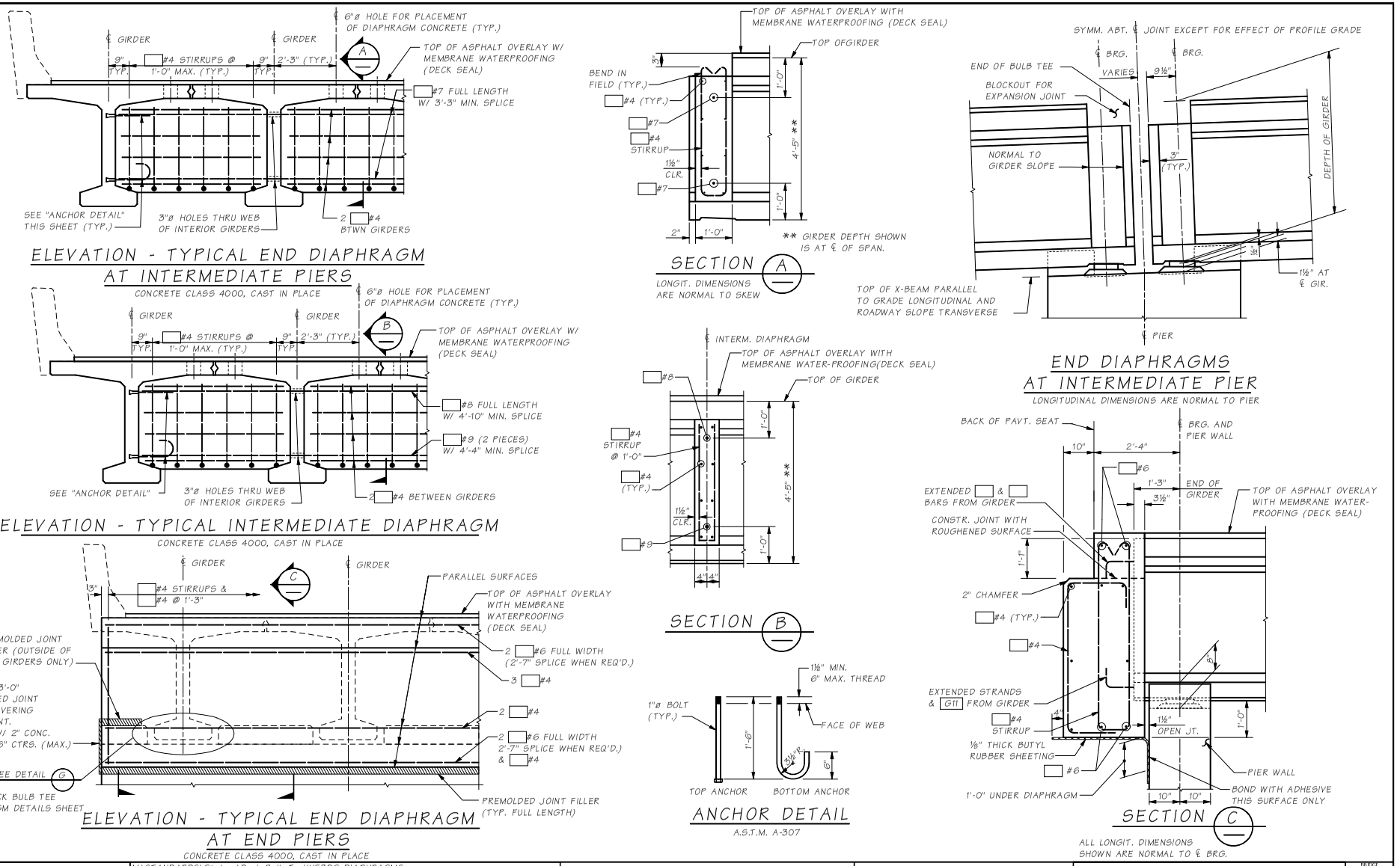

Bridge Design Engr.	M:\STANDARDS\Girders\Deck Bulb Tee\W53DG DIAPHRAGMS.man				REGION NO.	STATE	FED. AID PROJ. NO.	SHEET NO.	TOTAL SHEETS
Supervisor					10	WASH.			
Designed By					JOB NUMBER				
Checked By									
Detailed By									
Bridge Projects Engr.									
Prelim. Plan By									
Architect/Specialist	DATE	REVISION	BY	APP'D					

BRIDGE AND STRUCTURES OFFICE

Washington State Department of Transportation

STANDARD PRESTRESSED CONCRETE GIRDERS

W53DG DECK BULB TEE DIAPHRAGM DETAILS

BRIDGE SHEET NO.

SHEET OF SHEETS

SHEET

JOB NO.

SR

5.6-A26-3

Tue Feb 05 09:09:29 2008

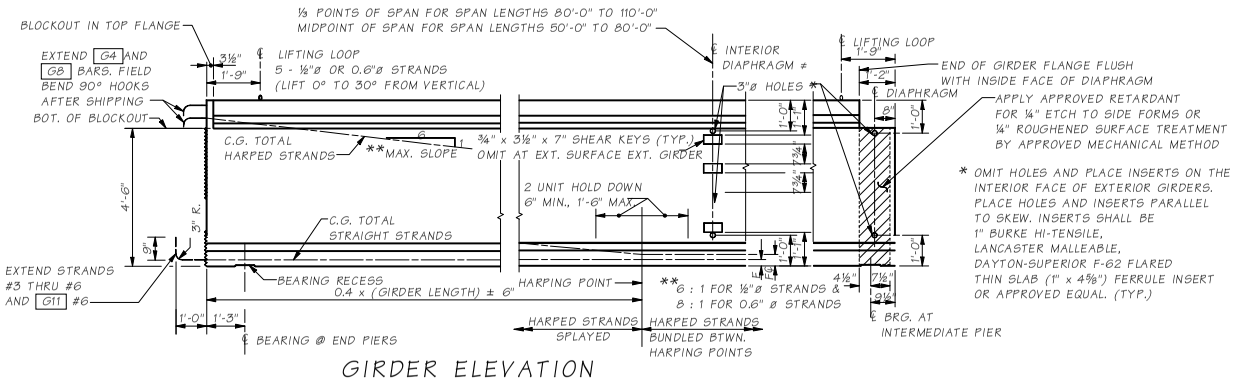

GIRDER ELEVATION

GENERAL NOTES

1. ALL DETAILS SHOWN PERTAIN ONLY TO THE 65 INCH DEEP GIRDER WITH THE 6'-0" GIRDER WIDTH SHOWN.
2. FORMS FOR THE BEARING PAD RECESSES SHALL BE CONSTRUCTED AND FASTENED IN SUCH A MANNER SO AS TO NOT CAUSE DAMAGE TO THE GIRDERS DURING THE STRAND RELEASE OPERATION.
3. SPAN LENGTH SHALL BE INCREASED AS NECESSARY TO COMPENSATE FOR SHORTENING DUE TO PRESTRESS AND SHRINKAGE
4. ALL PRESTRESSING STRANDS SHALL BE ½ INCH OR 0.6 INCH ø LOW RELAXATION SEVEN WIRE STRAND, AASHTO M203 GR. 270. ALL MILD STEEL REINFORCING SHALL BE AASHTO M31 GR. 60. ALL STUDS SHALL CONFORM TO STD. SPEC. SECTION 9-06.15. ALL OTHER STEEL SHALL BE AASHTO M183 AND SHALL BE PAINTED WITH 2 COATS OF STATE FORMULA A-9-73.
5. CUT ALL STRANDS FLUSH WITH THE GIRDER ENDS EXCEPT FOR THOSE SHOWN TO BE EXTENDED, AND PAINT ENDS OF FLUSH STRANDS WITH AN APPROVED EPOXY RESIN.
6. AFTER ERECTION, CUT OFF LIFTING LOOPS 1 INCH BELOW THE TOP OF THE FLANGE AND FILL WITH AN APPROVED GROUT PRIOR TO PLACING OF THE OVERLAY. ALL LIFTING STRANDS ARE TO BE OF THE SAME MATERIAL AND STRENGTH AS THE PRESTRESSING STRANDS. WRAP LIFTING LOOPS SO THAT EACH STRAND WILL CARRY IT'S SHARE OF THE TOTAL LOAD. EXTEND LIFTING LOOPS WITH 9 INCH LONG 90° HOOKS TO WITHIN 3 INCHES CLEAR OF THE BOTTOM OF THE GIRDER.

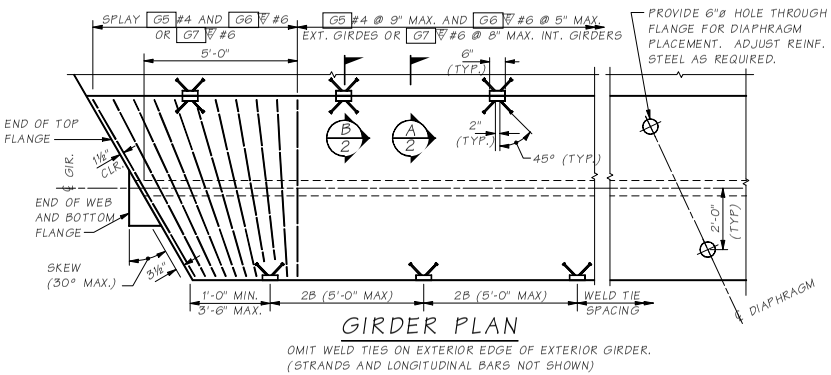

GIRDER PLAN

OMIT WELD TIES ON EXTERIOR EDGE OF EXTERIOR GIRDER. (STRANDS AND LONGITUDINAL BARS NOT SHOWN)

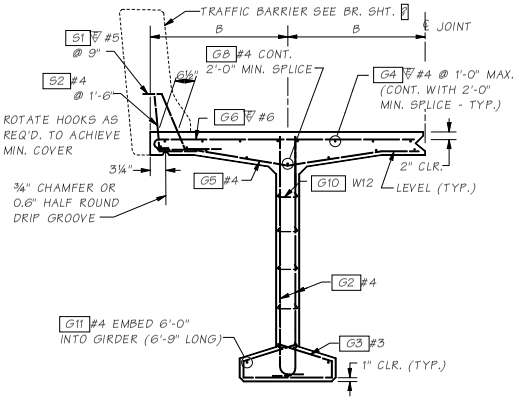

EXTERIOR GIRDER REINFORCING NEAR GIRDER END

FOR DETAILS NOT SHOWN, SEE INTERIOR GIRDER

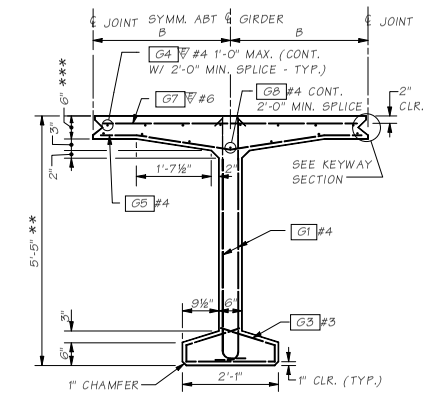

INTERIOR GIRDER REINFORCING NEAR MIDSPAN

*** THICKEN FLANGE TO COMPENSATE FOR SUPERELEVATION

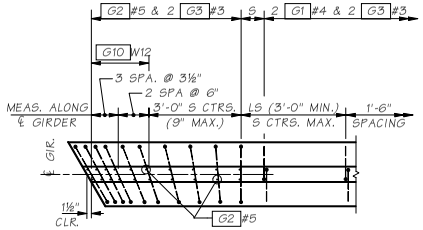

PLAN SECTION THROUGH GIRDER WEB

MARK	LOCATION	SIZE
G1	GIRDER STIRRUPS	4
G2	GIRDER END STIRRUPS	5
G3	BOTTOM FLANGE	3
G4	TOP OF TOP FLANGE - LONGIT.	▽4 STR.
G5	BOT. OF TOP FLANGE - TRANSV.	4
G6	TOP TRANSV. - EXT. GIRDER	▽6
G7	TOP TRANSV. - INT. GIRDER	▽6 STR.
G8	BOT. OF TOP FLANGE - LONGIT.	4 STR.
G10	GIRDER END TIES	W12 ΔΔ
G11	GIRDER LONGIT.	6 STR.
S1	T.B. TO DECK TIE	▽5
S2	T.B. TO DECK TIE	4

BENDING DIAGRAM (ALL DIMENSIONS ARE OUT TO OUT)

ΔΔ #3 OR #4 BARS MAY BE USED IN LIEU OF W12. FIELD BEND IS OPTIONAL.

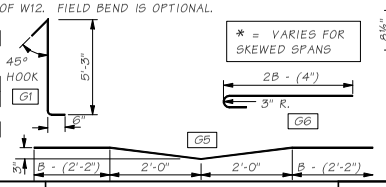

▽ DENOTES EPOXY COATED

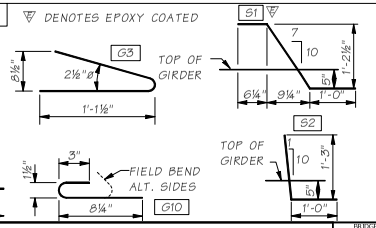

Bridge Design Engr.	M:\STANDARDS\Girders\Deck Bulb Tee\W65DG1.man				REGION NO.	STATE	FED. AID PROJ. NO.	SHEET NO.	TOTAL SHEETS
Supervisor					10	WASH.			
Designed By					JOB NUMBER				
Checked By									
Detailed By									
Bridge Projects Engr.									
Prelim. Plan By									
Architect/Specialist	DATE	REVISION	BY	APP'D					

BRIDGE AND STRUCTURES OFFICE

Washington State Department of Transportation

STANDARD PRESTRESSED CONCRETE GIRDERS

W65DG DECK BULB TEE GIRDER DETAILS 1 OF 2

BRIDGE SHEET NO.

SHEET OF SHEETS

SR JOB NO. SHEET

5.6-A27-1

Tue Feb 05 09:09:41 2008

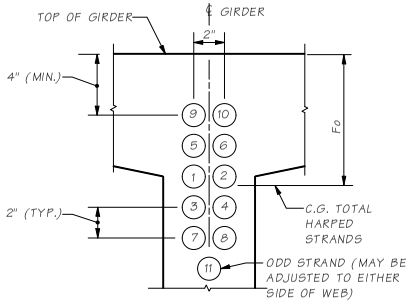

STRAND PATTERN AT GIRDER END

HARPED STRAND LOCATION SEQUENCE SHALL BE AS SHOWN (1), (2) ETC.

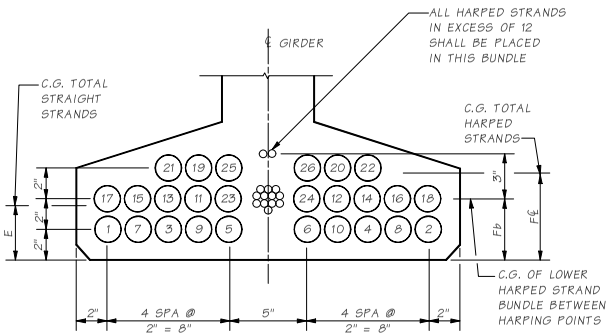

STRAND PATTERN AT ℄ SPAN

STRAND LOCATION SEQUENCE SHALL BE AS SHOWN (1), (2) ETC.

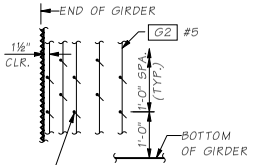

TIE SPACING DETAIL

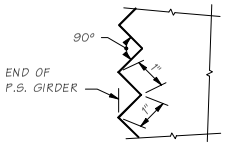

SAWTEETH DETAILS

SAWTEETH ARE FULL WIDTH - USE SAWTEETH KEYS FROM BOTTOM OF BOTTOM FLANGE TO BOTTOM OF LOWEST HARPED STRAND

** THICKEN FLANGE TO COMPENSATE FOR CAMBER DUE TO PRESTRESS. FLANGE THICKNESS SHOWN IS @ ℄ OF SPAN. FOR FLANGE THICKNESS ALONG GIRDER SEE GIRDER FLANGE THICKENING DETAILS ON BR. SHEET ☐ GIRDERS WITH ULTIMATE CAMBER VALUES SMALLER THAN ¾" ARE EXEMPT FROM THIS REQUIREMENT. FLANGE THICKENING SHALL BE USED ONLY IF NEEDED BY DESIGN.

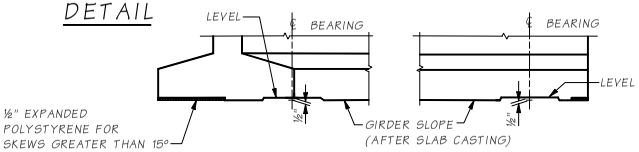

ELEVATION

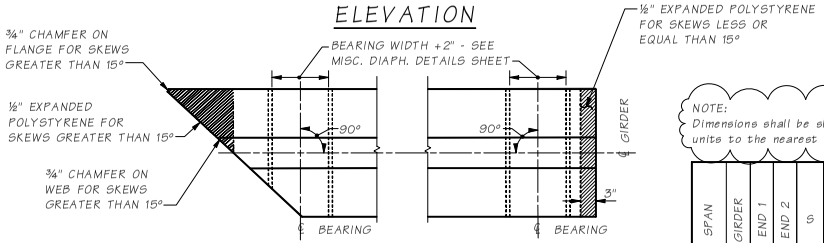

PLAN - BEARING RECESS & BOTTOM FLANGE SPALL PROTECTION

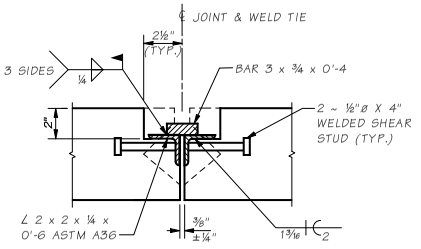

SECTION B 1
WELD TIE ALTERNATE #2

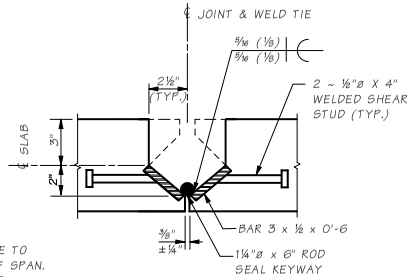

SECTION B 1
WELD TIE ALTERNATE #1

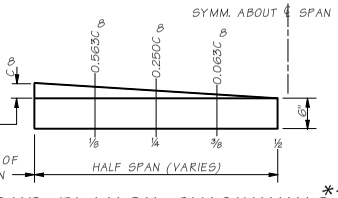

GIRDER FLANGE THICKENING**

NOTE: Dimensions shall be shown in imperial units to the nearest ⅛th inch.

GIRDER SCHEDULE

* The number of harped strands should not exceed ½ of the number of straight strands.

SPAN	GIRDER	END 1	END 2	S	LS	θ_1	θ_2	P_1	P_2	PLAN LENGTH (ALONG GIRDER GRADE)	MIN. CONC. COMPR. STRENGTH @ FINAL F'C KSI	MIN. CONC. COMPR. STRENGTH @ RELEASE F'CI KSI	HARPED * NO. OF STRANDS	HARPED * JACKING FORCE (KIPS)	STRAIGHT NO. OF STRANDS	STRAIGHT JACKING FORCE (KIPS)	LOCATION OF C.G. STRANDS E	LOCATION OF C.G. STRANDS F℄	LOCATION OF C.G. STRANDS Fb	LOCATION OF C.G. STRANDS Fo	CAMBER (IN) RELEASE △	CAMBER (IN) 30 △	CAMBER (IN) 2000 △
-	-	-	-	-	-	-	-	-	-	-	-	-	-	-	-	-	-	-	-	-	-	-	-

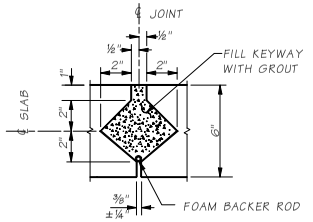

SECTION A 1
KEYWAY

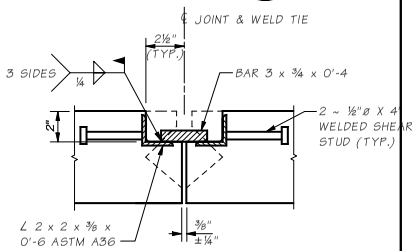

SECTION B 1
WELD TIE ALTERNATE #3

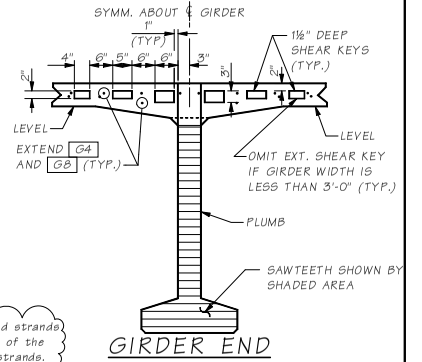

GIRDER END
AT END PIERS

Bridge Design Engr.	M:\STANDARDS\Girders\Deck Bulb Tee\W65DG2.man			
Supervisor				
Designed By				
Checked By				
Detailed By				
Bridge Projects Engr.				
Prelim. Plan By				
Architect/Specialist	DATE	REVISION	BY	APP'D

Tue Feb 05 09:09:23 2008

REGION NO.	STATE	FED. AID PROJ. NO.	SHEET NO.	TOTAL SHEETS
10	WASH			
JOB NUMBER				

BRIDGE AND STRUCTURES OFFICE

Washington State Department of Transportation

STANDARD PRESTRESSED CONCRETE GIRDERS

W65DG DECK BULB TEE GIRDER DETAILS 2 OF 2

BRIDGE SHEET NO. SHEET OF SHEETS

SHEET JOB NO. SR

5.6-A27-2

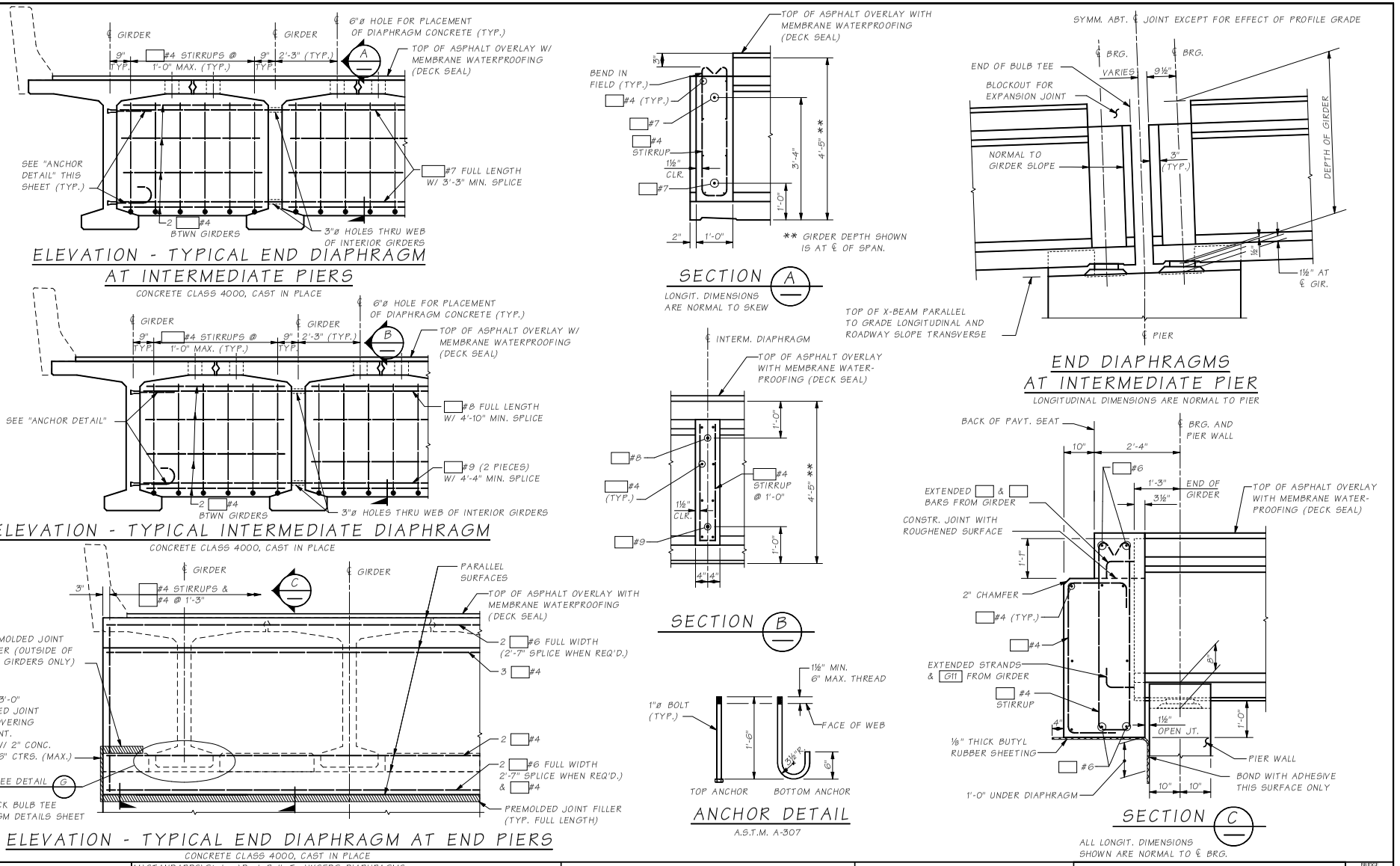

Bridge Design Engr.	M:\STANDARDS\Girders\Deck Bulb Tee\W65DG_DIAPHRAGMS.man			REGION NO.	STATE	FED. AID PROJ. NO.	SHEET NO.	TOTAL SHEETS	BRIDGE AND STRUCTURES OFFICE
Supervisor				10	WASH.				Washington State Department of Transportation
Designed By									STANDARD PRESTRESSED CONCRETE GIRDERS
Checked By				JOB NUMBER					W65DG DEAK BULB TEE GIRDER DIAPHRAGM DETAILS
Detailed By									BRIDGE SHEET NO.
Bridge Projects Engr.									SHEET OF SHEETS
Prelim. Plan By									
Architect/Specialist	DATE	REVISION	BY	APP'D					

SR JOB NO. 5.6-A27-3 SHEET

Tue Feb 05 09:10:05 2008

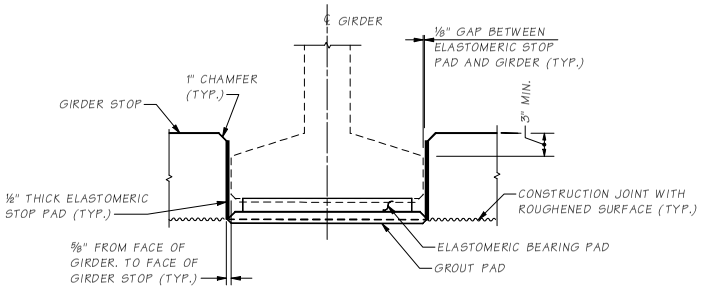

SECTION G

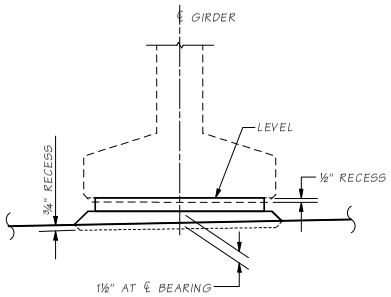

GROUT PAD ELEVATION

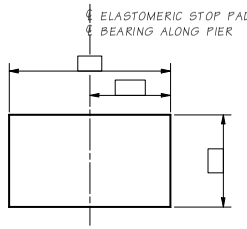

ELASTOMERIC STOP PAD

DUROMETER HARDNESS = 60

NOTE:

1. GIRDER STOPS SHALL BE CONSTRUCTED AFTER GIRDER PLACEMENT.
2. THE ELASTOMERIC STOP PADS SHALL BE CEMENTED TO GIRDER STOPS WITH APPROVED ADHESIVE.

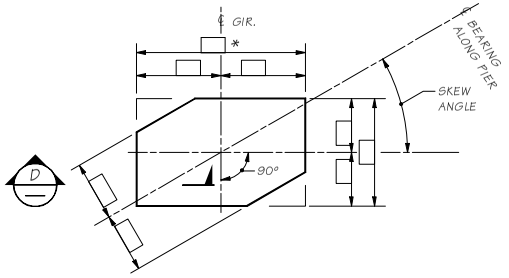

BEARING PAD

LAMINATED ELASTOMERIC BRIDGE PAD ☐ THICK (☐ SHIMS)

Skew angle shown at 30°.

* The edge of the bearing pad shall be set at 1" from the edge of the bottom flange.

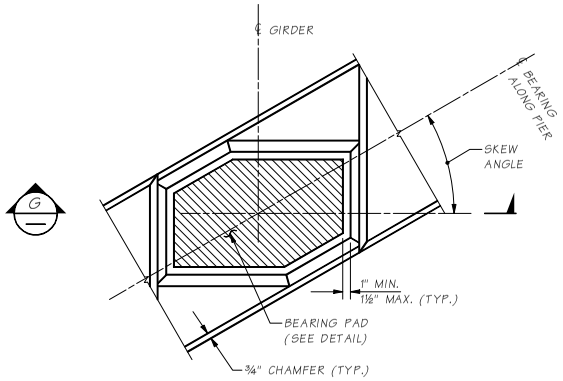

GROUT PAD DETAIL

Skew angle shown at 30°

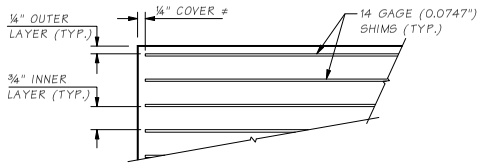

SECTION D

≠ ⅛" for pad thickness ≤ 3"
¼" for 3" < pad thickness ≤ 7"
½" for pad thickness > 7"

BEARING DESIGN TABLE	
SERVICE - I LIMIT STATE	
DEAD LOAD REACTION	KIPS
LIVE LOAD REACTION (W/O IMPACT)	KIPS
UNLOADED HEIGHT	IN.
LOADED HEIGHT (DL)	IN.
DUROMETER HARDNESS	60

Bridge Design Engr.	M:\STANDARDS\Girders\Deck Bulb Tee\DECK BULB TEE MISC DIAPH DETAIL.MAN				REGION NO.	STATE	FED. AID PROJ. NO.	SHEET NO.	TOTAL SHEETS
Supervisor					10	WASH.			
Designed By					JOB NUMBER				
Checked By									
Detailed By									
Bridge Projects Engr.									
Prelim. Plan By									
Architect/Specialist	DATE	REVISION	BY	APP'D					

Tue Feb 05 09:10:16 2008

BRIDGE AND STRUCTURES OFFICE

Washington State Department of Transportation

STANDARD PRESTRESSED CONCRETE GIRDERS

DECK BULB TEE GIRDER DIAPHRAGM DETAILS

BRIDGE SHEET NO. | SHEET | OF | SHEETS

SR | JOB NO. | SHEET

5.6-A27-4

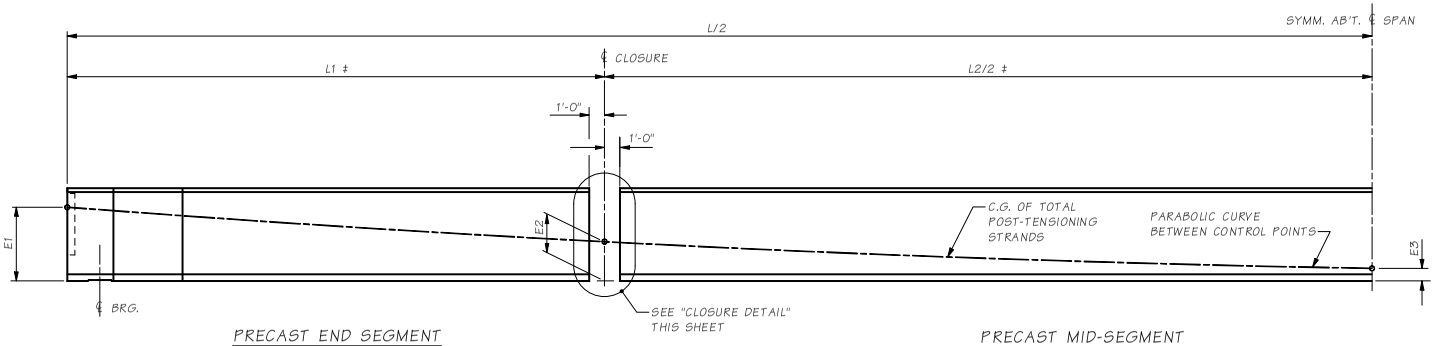

PRECAST LONGITUDINAL HALF-SECTION

SHOWING POST-TENSIONING CABLE PATHS
± MEASURED BEFORE POST-TENSIONING.

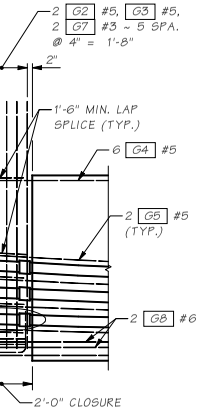

CLOSURE DETAIL

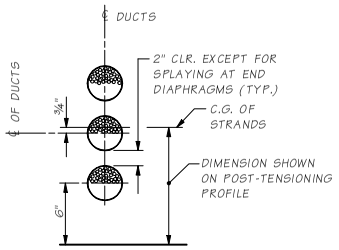

TENDON IN SAG CURVE

STRAND LOCATION DETAIL

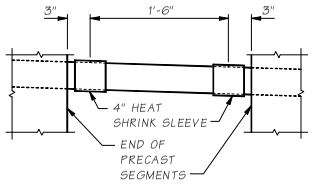

DUCT SPLICE DETAIL

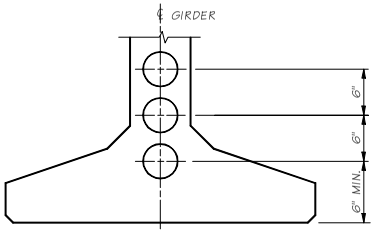

POST-TENSIONING STRAND PATTERN AT ℄ SPAN

POST-TENSIONING TABLE

SPAN	GIRDER	MIN. CONC. COMPRESSIVE STRENGTH (KSI)		NUMBER OF STRANDS	PRESTRESSING LOAD (KIPS)		TOTAL PRESTRESS LOSS (KSI)	E1 (IN.)	E2 (IN.)	E3 (IN.)	TEMPORARY STRANDS	
		GIRDER	CLOSURE		JACKING	AFTER SEATING					NUMBER OF STRANDS	JACKING FORCE (KIPS)

POST-TENSIONING NOTES

1. THE MINIMUM COMPRESSIVE STRENGTH OF THE CAST-IN-PLACE CONCRETE AT THE CLOSURE AT THE TIME OF POST-TENSIONING SHALL BE AS SHOWN IN POST-TENSIONING TABLE.
2. THE MAXIMUM OUTSIDE DIAMETER OF THE DUCT SHALL BE ??? INCHES. THE AREA OF THE DUCT SHALL BE AT LEAST 2.5 TIMES THE NET AREA OF THE PRESTRESSING STEEL IN THE DUCT.
3. THE DESIGN IS BASED ON [½"ø OR 0.6"ø] LOW RELAXATION STRANDS WITH AN ANCHOR SET OF ⅜", A CURVATURE FRICTION COEFFICIENT, μ = 0.20 AND A WOBBLE FRICTION COEFFICIENT, k = 0.0002/FT. THE ACTUAL ANCHOR SET AND JACKING FORCE USED BY THE CONTRACTOR SHALL BE SPECIFIED IN THE SHOP PLANS AND INCLUDED IN THE TRANSFER FORCE CALCULATIONS.
4. THE DESIGN IS BASED ON THE ESTIMATED PRESTRESS LOSS OF POST-TENSIONING STRANDS SHOWN IN THE POST-TENSIONING TABLE DUE TO STEEL RELAXATION, ELASTIC SHORTENING CREEP AND SHRINKAGE OF CONCRETE.
5. THE CONTRACTOR SHALL SUBMIT THE STRESSING SEQUENCE AND ELONGATION CALCULATIONS TO THE ENGINEER FOR APPROVAL. ALL LOSSES DUE TO TENDON VERTICAL AND HORIZONTAL CURVATURE MUST BE INCLUDED IN ELONGATION CALCULATIONS. THE STRESSING SEQUENCE SHALL MEET THE FOLLOWING CRITERIA:
   A. THE PRESTRESSING FORCE SHALL BE DISTRIBUTED WITH AN APPROXIMATELY EQUAL AMOUNT IN EACH WEB AND SHALL BE PLACED SYMMETRICALLY ABOUT THE CENTERLINE OF THE BRIDGE.
   B. NO MORE THAN ONE-HALF OF THE PRESTRESSING FORCE IN ANY WEB MAY BE STRESSED BEFORE AN EQUAL FORCE IS STRESSED IN THE ADJACENT WEBS. AT NO TIME DURING STRESSING OPERATION WILL MORE THAN 1/6 OF THE TOTAL PRESTRESSING FORCE IS APPLIED ECCENTRICALLY ABOUT THE CENTERLINE OF THE BRIDGE.
6. ALL TENDONS SHALL BE STRESSED FROM ONE END.
7. TEMPORARY STRANDS SHALL BE POST-TENSIONED IN ACCORDANCE WITH SECTION 6-02.3(25)L OF THE STANDARD SPECIFICATIONS. TEMPORARY STRANDS MAY BE POST-TENSIONED ON THE SAME DAY THE PRETENSIONING IS RELEASED INTO THE GIRDER.

Bridge Design Engr.	M:\Standards\Girders\PT Wide Flange\WF74PTG1.MAN								
Supervisor					REGION NO.	STATE	FED. AID PROJ. NO.	SHEET NO.	TOTAL SHEETS
Designed By					10	WASH.			
Checked By					JOB NUMBER				
Detailed By									
Bridge Projects Engr.									
Prelim. Plan By									
Architect/Specialist	DATE	REVISION	BY	APP'D					

BRIDGE AND STRUCTURES OFFICE

Washington State Department of Transportation

STANDARD PRESTRESSED CONCRETE GIRDERS

WF74PTG SPLICED GIRDER DETAILS 1 OF 5

BRIDGE SHEET NO. | SHEET | OF | SHEETS

SR | JOB NO. | SHEET

5.9-A1-1

Tue Feb 05 08:18:55 2008

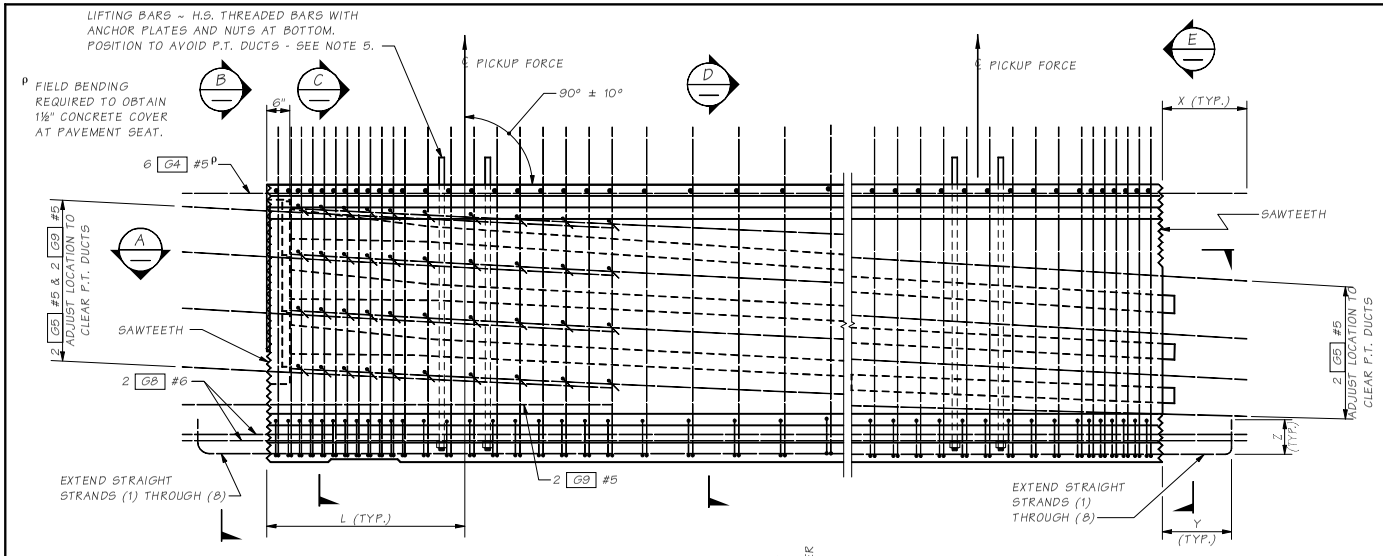

TYPICAL ELEVATION AT END SEGMENT

END TYPE A SHOWN, OTHER END TYPES SIMILAR

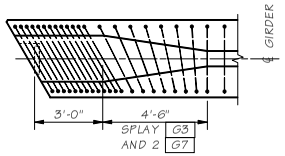

TYPICAL END ELEVATION AT CLOSURE

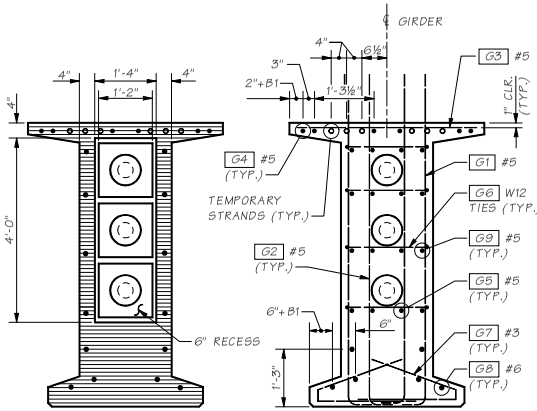

TRANSVERSE REINFORCING AT SKEWED ENDS

ONLY TRANSVERSE REINFORCING SHOWN

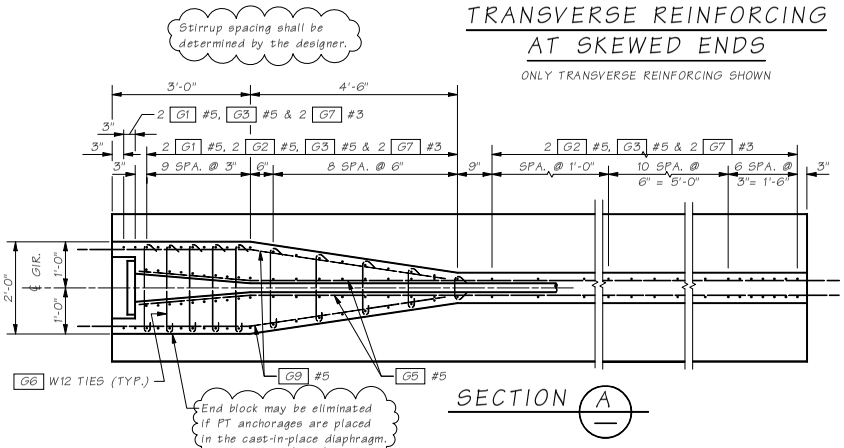

SECTION A

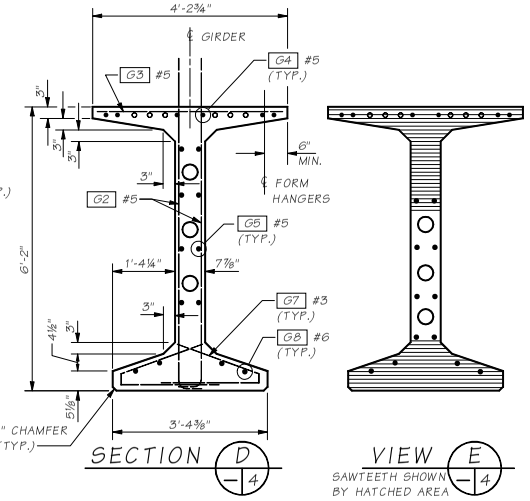

VIEW B

SAWTEETH SHOWN BY HATCHED AREA.

SECTION C

FOR "B1" SEE GIRDER DETAILS 3 OF 5

SECTION D

— 4

VIEW E

SAWTEETH SHOWN BY HATCHED AREA

— 4

PRE-TENSIONING NOTES

1. PLAN LENGTH SHALL BE INCREASED AS NECESSARY TO COMPENSATE FOR SHORTENING DUE TO PRESTRESS AND SHRINKAGE.
2. ALL PRETENSIONED AND TEMPORARY STRANDS SHALL BE [½"ø OR 0.6"ø] LOW RELAXATION STRANDS (AASHTO M203 GRADE 270.)
3. FOR END TYPES A, C, D AND E CUT ALL STRANDS FLUSH WITH THE GIRDER ENDS AND PAINT WITH AN APPROVED EPOXY RESIN, EXCEPT FOR EXTENDED STRANDS AS SHOWN. FOR END TYPE B CUT ALL STRANDS 1" BELOW CONCRETE SURFACE AND GROUT WITH AN APPROVED EPOXY GROUT.
4. THE TOP SURFACE OF THE GIRDER FLANGE SHALL BE ROUGHENED IN ACCORDANCE WITH SECTION 6-02.3(25)H OF THE STANDARD SPECIFICATIONS.
5. LIFTING EMBEDMENTS SHALL BE INSTALLED IN ACCORDANCE WITH SECTION 6-02.3(25)L OF THE STANDARD SPECIFICATIONS. CONTRACTOR TO DESIGN OTHER LIFTING MECHANISM IF THE GIRDER SECTION WEIGHT EXCEEDS 200 KIPS.
6. CAUTION SHALL BE EXERCISED IN HANDLING AND PLACING GIRDERS. ALL GIRDERS SHALL BE CHECKED BY THE CONTRACTOR TO ENSURE THAT THEY ARE BRACED ADEQUATELY TO PREVENT TIPPING AND TO CONTROL LATERAL BENDING DURING SHIPPING. ONCE ERECTED, ALL GIRDERS SHALL BE BRACED LATERALLY TO PREVENT TIPPING UNTIL THE DIAPHRAGMS ARE CAST AND CURED.
7. FORMS FOR BEARING PAD RECESSES SHALL BE CONSTRUCTED AND FASTENED IN SUCH A MANNER AS TO NOT CAUSE DAMAGE TO THE GIRDER DURING THE STRAND RELEASE OPERATION.

Bridge Design Engr.	M:\Standards\Prestrs\PT_Wide Flange\WF74PTG2.MAN								
Supervisor					REGION NO.	STATE	FED. AID PROJ. NO.	SHEET NO.	TOTAL SHEETS
Designed By					10	WASH.			
Checked By					JOB NUMBER				
Detailed By									
Bridge Projects Engr.									
Prelim. Plan By									
Architect/Specialist	DATE	REVISION	BY	APP'D					

BRIDGE AND STRUCTURES OFFICE

Washington State Department of Transportation

STANDARD PRESTRESSED CONCRETE GIRDERS

WF74PTG SPLICED GIRDER DETAILS 2 OF 5

BRIDGE SHEET NO. | SHEET | OF | SHEETS

SR | JOB NO. | SHEET

5.9-A1-2

Tue Feb 05 08:18:59 2008

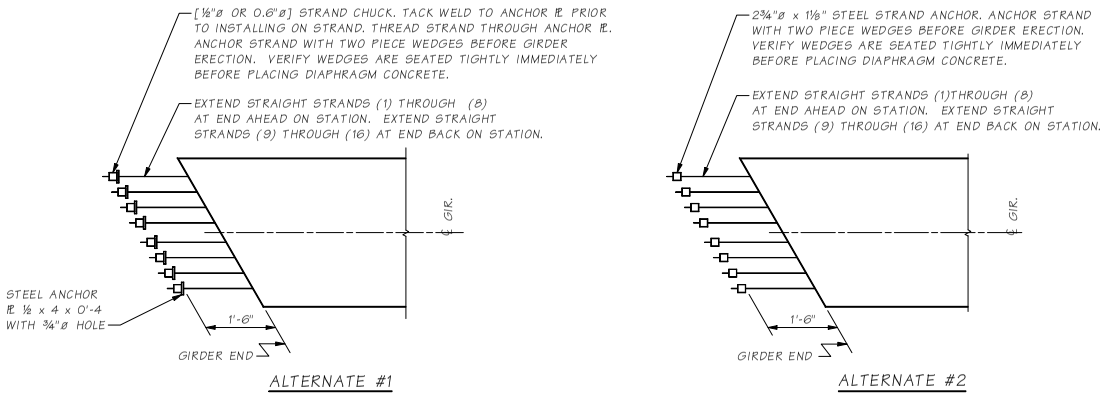

Number of straight strands shall be determined by the designer

STRAND EXTENSION DETAIL

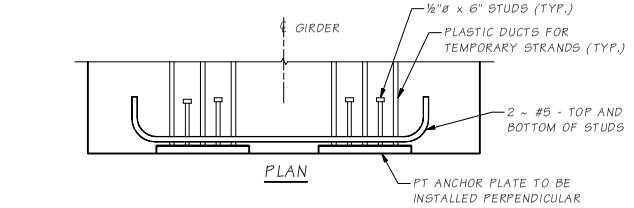

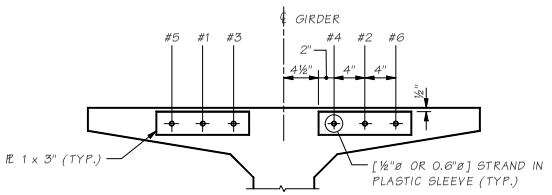

TEMPORARY STRAND PATTERN

ADJUST G4 BARS TO CLEAR THE STEEL PLATE

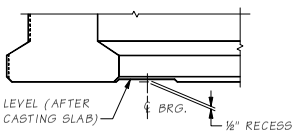

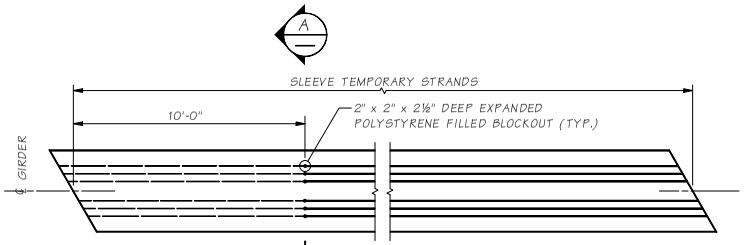

PLAN VIEW OF TEMPORARY STRANDS

SEE "GIRDER SCHEDULE" FOR NUMBER OF TEMPORARY STRANDS REQUIRED.

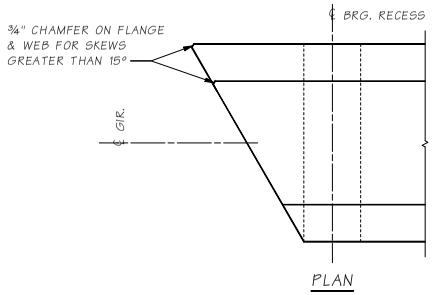

BOTTOM FLANGE

Diaphragm Type	END TYPE	BEARING RECESS	X	Y	Z	SAWTEETH
End Diaph. on Girder	A	YES	1'-10"	1'-6"	9"	YES
"L" Abutment	B	YES	0"	0"	0"	NO
Hinge Diaph. @ Intermediate Pier	C	NO	1'-10"	1'-6"	9"	YES
Fixed Diaph. @ Intermediate Pier	D	NO	1'-10"	ALT. 1 OR ALT. 2 STRAND EXTENTION		YES
Spliced girder closure pour	E	NO	1'-10"	1'-6"	9"	YES

FOR END TYPES "C" AND "E" ONLY

ENDS AHEAD ON STATION
B1 = 0" (G4 , G8)
ENDS BACK ON STATION
B1 = 1½"/ (G4 , G8)

MARK	LOCATION	SIZE	
G1	GIRDER STIRRUPS	5	
G2	GIRDER END STIRRUPS	5	
G3	GIRDER TOP FLANGE	5	STR.
G4	GIRDER LONGIT. FULL LENGTH	5	STR.
G5	GIRDER LONGIT.	5	STR.
G6	GIRDER END TIES	W12δ	
G7β	GIRDER BOT. FLANGE TIES	3	
G8	GIRDER LONGIT.	6	STR.
G9	GIRDER END LONGIT.	5	
G11β	GIRDER BOT. FLANGE TIES	3	
G12β	GIRDER BOT. FLANGE TIES	3	

BENDING DIAGRAM (ALL DIMENSIONS ARE OUT TO OUT)
NOTE: FOR DIMENSION "A", SEE "GIRDER SCHEDULE"

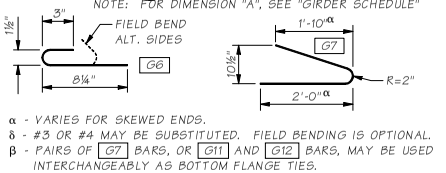

α - VARIES FOR SKEWED ENDS.
δ - #3 OR #4 MAY BE SUBSTITUTED. FIELD BENDING IS OPTIONAL.
β - PAIRS OF G7 BARS, OR G11 AND G12 BARS, MAY BE USED INTERCHANGEABLY AS BOTTOM FLANGE TIES.
γ - SHALL BE CHECKED FOR EFFECT OF VERTICAL CURVE.

Bridge Design Engr.	M:\STANDARDS\Girders\PT Wide Flange\WF-PTG3.MAN				REGION NO.	STATE	FED. AID PROJ. NO.	SHEET NO.	TOTAL SHEETS
Supervisor					10	WASH.			
Designed By					JOB NUMBER				
Checked By									
Detailed By									
Bridge Projects Engr.									
Prelim. Plan By									
Architect/Specialist	DATE	REVISION	BY	APP'D					

Fri Feb 22 07:16:23 2008

BRIDGE AND STRUCTURES OFFICE

Washington State Department of Transportation

STANDARD PRESTRESSED CONCRETE GIRDERS

SPLICED GIRDER DETAILS 3 OF 5

BRIDGE SHEET NO.

SHEET OF SHEETS

JOB NO. SHEET

SR 5.9-A1-3

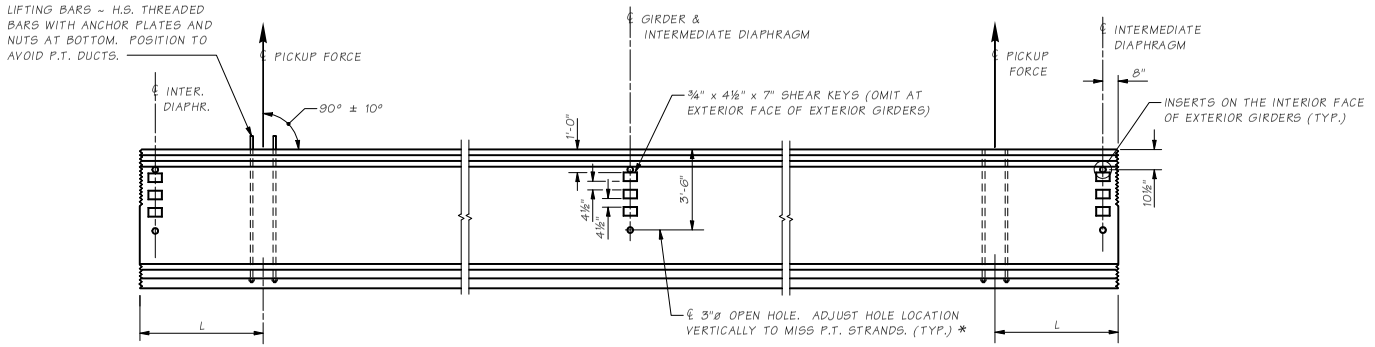

GIRDER ELEVATION
MID-SEGMENT

* OMIT HOLES AND PLACE INSERTS ON THE INTERIOR FACE OF EXTERIOR GIRDERS. PLACE HOLES AND INSERTS PARALLEL TO SKEW. INSERTS SHALL BE 1"ø BURKE HI-TENSILE, LANCASTER MALLEABLE, DAYTON-SUPERIOR F-62 FLARED THIN SLAB (1" x 4⅝") FERRULE INSERT OR APPROVED EQUAL. (TYP.)

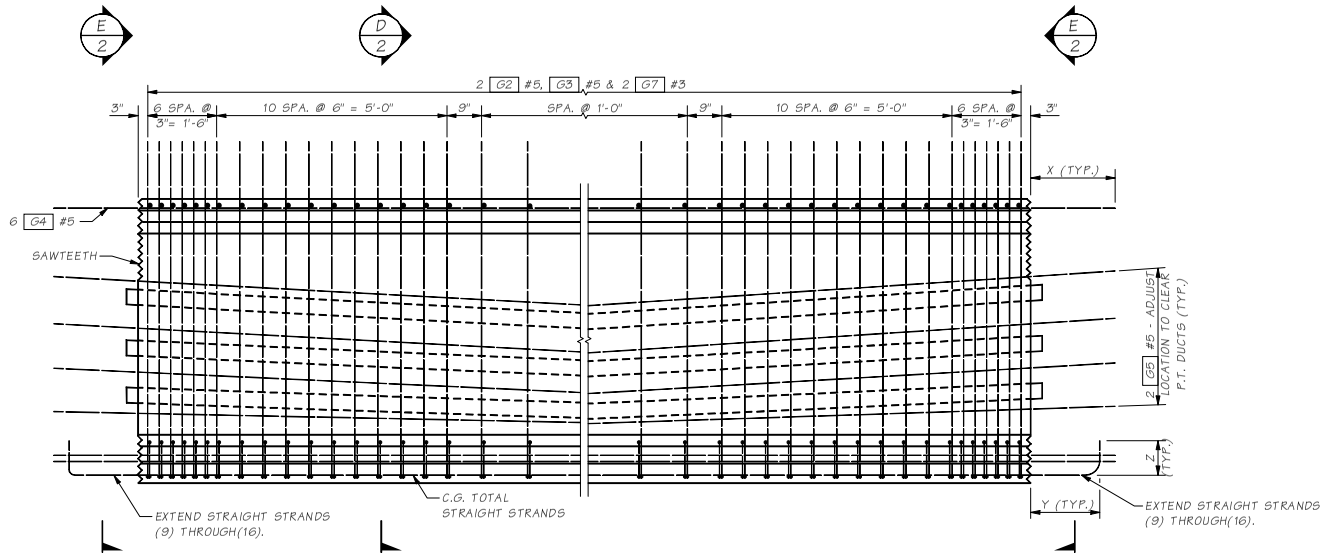

ELEVATION
MID-SEGMENT REINFORCING

Bridge Design Engr.	M:\Standards\Girders\PT Wide Flange\WF74PTG4.MAN				REGION NO.	STATE	FED. AID PROJ. NO.	SHEET NO.	TOTAL SHEETS	BRIDGE AND STRUCTURES OFFICE	Washington State Department of Transportation	STANDARD PRESTRESSED CONCRETE GIRDERS	BRIDGE SHEET NO.
Supervisor					10	WASH.							
Designed By					JOB NUMBER							WF74PTG GIRDER DETAILS 4 OF 5	SHEET OF SHEETS
Checked By													
Detailed By													
Bridge Projects Engr.													
Prelim. Plan By													
Architect/Specialist	DATE	REVISION	BY	APP'D									

SR ____ JOB NO. ____ SHEET ____

5.9-A1-4

Tue Feb 05 09:20:10 2008

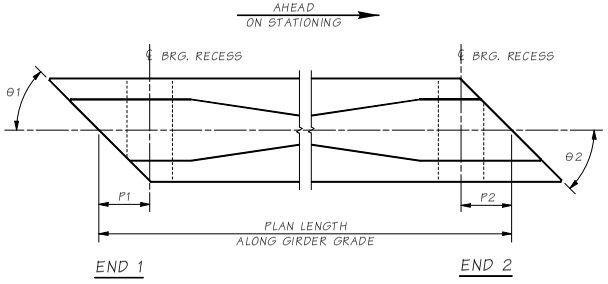

GIRDER PLAN

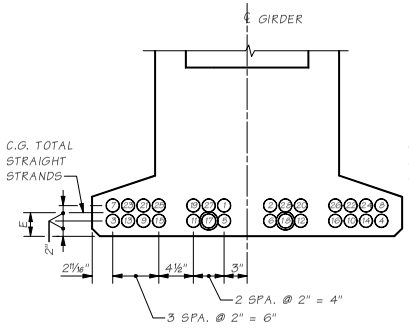

STRAND PATTERN PRECAST END SEGMENTS

STRAIGHT STRAND LOCATION SEQUENCE SHALL BE AS SHOWN: (1), (2), (3), ETC.

○ - INDICATES DEBONDED STRAND.

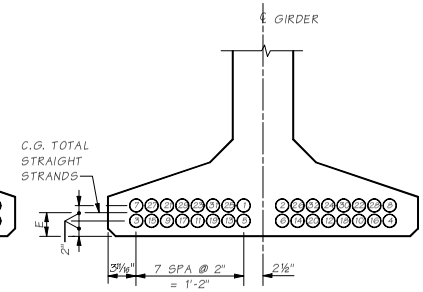

STRAND PATTERN PRECAST MID-SEGMENTS

STRAIGHT STRAND LOCATION SEQUENCE SHALL BE AS SHOWN: (1), (2), (3), ETC.

○ - INDICATES DEBONDED STRAND.

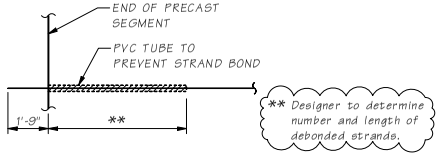

STRAND DEBONDING DETAIL

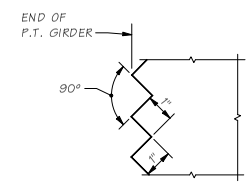

SAWTEETH DETAIL

SAWTEETH ARE FULL WIDTH ~ USE SAWTOOTH KEYS IN AREA OUTSIDE OF PT. DUCTS AS SHOWN IN VIEWS B AND E - GIRDER DETAILS 2 OF 5

GIRDER SCHEDULE

DIMENSION "A" AT ℄ BEARINGS = SEE "A" DIMENSION TABLE

		END SEGMENT 1														MID-SEGMENT											END SEGMENT 2											
		MINIMUM CONCRETE COMPR. STRENGTH									STRAIGHT		C.G. STRANDS									STRAIGHT		C.G. STRANDS										STRAIGHT		C.G. STRANDS		
SPAN	GIRDER	@ FINAL F'C (KSI)	@ RELEASE F'CI (KSI)	END 1 TYPE	END 2 TYPE	L	θ1 (DEG.)	θ2 (DEG.)	P1	PLAN LENGTH (ALONG ℄ GIRDER GRADE)	NO. OF STRANDS	JACKING FORCE (KIPS)	E	C	D @ 40 DAYS	END 1 TYPE	END 2 TYPE	L	θ1 (DEG.)	θ2 (DEG.)	PLAN LENGTH (ALONG ℄ GIRDER GRADE)	NO. OF STRANDS	JACKING FORCE (KIPS)	E	C	D	END 1 TYPE	END 2 TYPE	L	θ1 (DEG.)	θ2 (DEG.)	P2	PLAN LENGTH (ALONG ℄ GIRDER GRADE)	NO. OF STRANDS	JACKING FORCE (KIPS)	E	C	D @ 40 DAYS

"A" DIMENSION TABLE

PIER	"A" (40 DAYS) (IN.)	"A" (120 DAYS) (IN.)

NOTE:
Dimensions shall be shown in imperial units to the nearest 1/8th inch.

Bridge Design Engr.	M:\STANDARDS\Girders\PT Wide Flange\WF-PTG5.MAN				REGION NO.	STATE	FED. AID PROJ. NO.	SHEET NO.	TOTAL SHEETS
Supervisor					10	WASH.			
Designed By									
Checked By					JOB NUMBER				
Detailed By									
Bridge Projects Engr.									
Prelim. Plan By									
Architect/Specialist	DATE	REVISION	BY	APP'D					

BRIDGE AND STRUCTURES OFFICE

Washington State Department of Transportation

STANDARD PRESTRESSED CONCRETE GIRDERS

SPLICED GIRDER DETAILS 5 OF 5

BRIDGE SHEET NO. | SHEET OF SHEETS

SR JOB NO. SHEET 1

5.9-A1-5

Tue Feb 05 09:20:16 2008

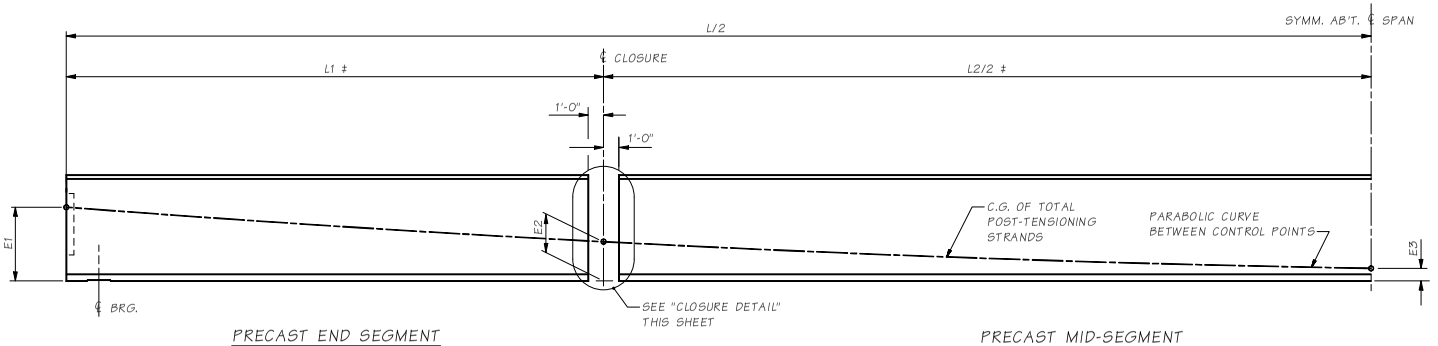

PRECAST END SEGMENT

PRECAST MID-SEGMENT

PRECAST LONGITUDINAL HALF-SECTION

SHOWING POST-TENSIONING CABLE PATHS
± MEASURED BEFORE POST-TENSIONING.

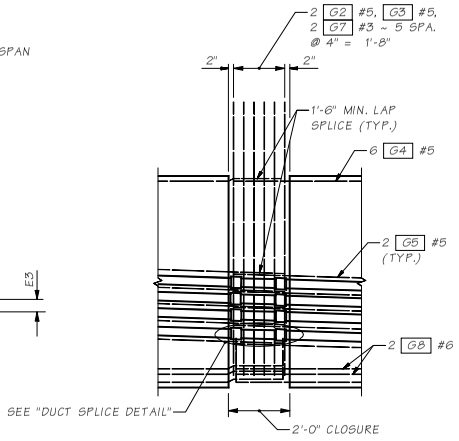

CLOSURE DETAIL

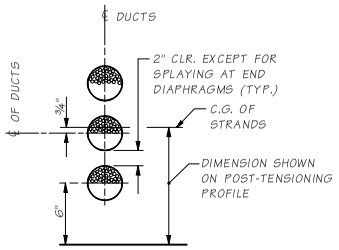

TENDON IN SAG CURVE

STRAND LOCATION DETAIL

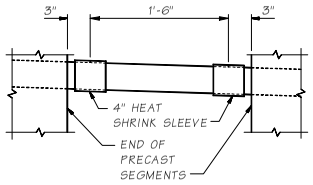

DUCT SPLICE DETAIL

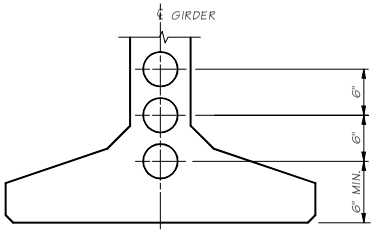

POST-TENSIONING STRAND PATTERN AT ℄ SPAN

POST-TENSIONING TABLE

SPAN	GIRDER	MIN. CONC. COMPRESSIVE STRENGTH (KSI)		NUMBER OF STRANDS	PRESTRESSING LOAD (KIPS)		TOTAL PRESTRESS LOSS (KSI)	E1 (IN.)	E2 (IN.)	E3 (IN.)	TEMPORARY STRANDS	
		GIRDER	CLOSURE		JACKING	AFTER SEATING					NUMBER OF STRANDS	JACKING FORCE (KIPS)

POST-TENSIONING NOTES

1. THE MINIMUM COMPRESSIVE STRENGTH OF THE CAST-IN-PLACE CONCRETE AT THE CLOSURE AT THE TIME OF POST-TENSIONING SHALL BE AS SHOWN IN POST-TENSIONING TABLE.
2. THE MAXIMUM OUTSIDE DIAMETER OF THE DUCT SHALL BE ??? INCHES. THE AREA OF THE DUCT SHALL BE AT LEAST 2.5 TIMES THE NET AREA OF THE PRESTRESSING STEEL IN THE DUCT.
3. THE DESIGN IS BASED ON [½"ø OR 0.6"ø] LOW RELAXATION STRANDS WITH AN ANCHOR SET OF 3/8", A CURVATURE FRICTION COEFFICIENT, μ = 0.20 AND A WOBBLE FRICTION COEFFICIENT, k = 0.0002/FT. THE ACTUAL ANCHOR SET AND JACKING FORCE USED BY THE CONTRACTOR SHALL BE SPECIFIED IN THE SHOP PLANS AND INCLUDED IN THE TRANSFER FORCE CALCULATIONS.
4. THE DESIGN IS BASED ON THE ESTIMATED PRESTRESS LOSS OF POST-TENSIONING STRANDS SHOWN IN THE POST-TENSIONING TABLE DUE TO STEEL RELAXATION, ELASTIC SHORTENING CREEP AND SHRINKAGE OF CONCRETE.
5. THE CONTRACTOR SHALL SUBMIT THE STRESSING SEQUENCE AND ELONGATION CALCULATIONS TO THE ENGINEER FOR APPROVAL. ALL LOSSES DUE TO TENDON VERTICAL AND HORIZONTAL CURVATURE MUST BE INCLUDED IN ELONGATION CALCULATIONS. THE STRESSING SEQUENCE SHALL MEET THE FOLLOWING CRITERIA:
   A. THE PRESTRESSING FORCE SHALL BE DISTRIBUTED WITH AN APPROXIMATELY EQUAL AMOUNT IN EACH WEB AND SHALL BE PLACED SYMMETRICALLY ABOUT THE CENTERLINE OF THE BRIDGE.
   B. NO MORE THAN ONE-HALF OF THE PRESTRESSING FORCE IN ANY WEB MAY BE STRESSED BEFORE AN EQUAL FORCE IS STRESSED IN THE ADJACENT WEBS. AT NO TIME DURING STRESSING OPERATION WILL MORE THAN 1/6 OF THE TOTAL PRESTRESSING FORCE IS APPLIED ECCENTRICALLY ABOUT THE CENTERLINE OF THE BRIDGE.
6. ALL TENDONS SHALL BE STRESSED FROM ONE END.
7. TEMPORARY STRANDS SHALL BE POST-TENSIONED IN ACCORDANCE WITH SECTION 6-02.3(25)L OF THE STANDARD SPECIFICATIONS. TEMPORARY STRANDS MAY BE POST-TENSIONED ON THE SAME DAY THE PRETENSIONING IS RELEASED INTO THE GIRDER.

Bridge Design Engr.	M:\STANDARDS\Girders\PT Wide Flange\WF83PTG1.man				REGION NO.	STATE	FED. AID PROJ. NO.	SHEET NO.	TOTAL SHEETS
Supervisor					10	WASH.			
Designed By					JOB NUMBER				
Checked By									
Detailed By									
Bridge Projects Engr.									
Prelim. Plan By									
Architect/Specialist	DATE	REVISION	BY	APP'D					

BRIDGE AND STRUCTURES OFFICE

Washington State Department of Transportation

STANDARD PRESTRESSED CONCRETE GIRDERS

WF83PTG SPLICED GIRDER DETAILS 1 OF 5

BRIDGE SHEET NO. / SHEET / OF / SHEETS

SR JOB NO. SHEET 5.9-A2-1

Tue Feb 05 09:20:23 2008

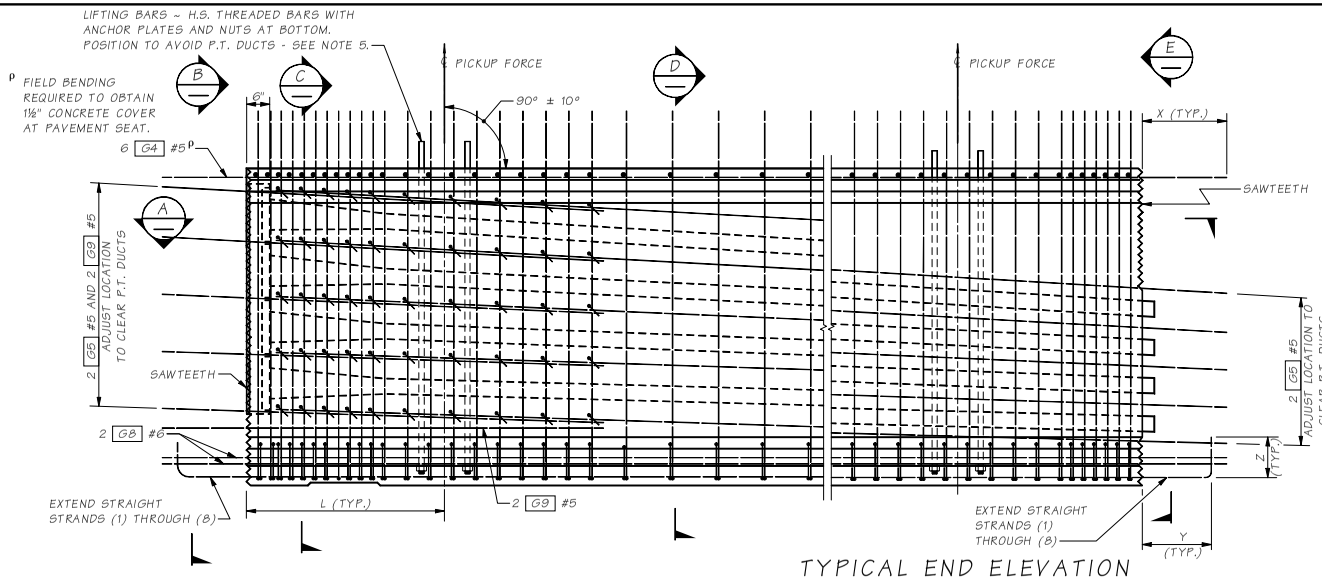

PRE-TENSIONING NOTES

1. PLAN LENGTH SHALL BE INCREASED AS NECESSARY TO COMPENSATE FOR SHORTENING DUE TO PRESTRESS AND SHRINKAGE.
2. ALL PRETENSIONED AND TEMPORARY STRANDS SHALL BE [½"ø OR 0.6"ø] LOW RELAXATION STRANDS (AASHTO M203 GRADE 270.)
3. FOR END TYPES A, C, D AND E CUT ALL STRANDS FLUSH WITH THE GIRDER ENDS AND PAINT WITH AN APPROVED EPOXY RESIN, EXCEPT FOR EXTENDED STRANDS AS SHOWN. FOR END TYPE B CUT ALL STRANDS 1" BELOW CONCRETE SURFACE AND GROUT WITH AN APPROVED EPOXY GROUT.
4. THE TOP SURFACE OF THE GIRDER FLANGE SHALL BE ROUGHENED IN ACCORDANCE WITH SECTION 6-02.3(25)H OF THE STANDARD SPECIFICATIONS.
5. LIFTING EMBEDMENTS SHALL BE INSTALLED IN ACCORDANCE WITH SECTION 6-02.3(25)L OF THE STANDARD SPECIFICATIONS. CONTRACTOR TO DESIGN OTHER LIFTING MECHANISM IF THE GIRDER SECTION WEIGHT EXCEEDS 200 KIPS.
6. CAUTION SHALL BE EXERCISED IN HANDLING AND PLACING GIRDERS. ALL GIRDERS SHALL BE CHECKED BY THE CONTRACTOR TO ENSURE THAT THEY ARE BRACED ADEQUATELY TO PREVENT TIPPING AND TO CONTROL LATERAL BENDING DURING SHIPPING. ONCE ERECTED, ALL GIRDERS SHALL BE BRACED LATERALLY TO PREVENT TIPPING UNTIL THE DIAPHRAGMS ARE CAST AND CURED.
7. FORMS FOR BEARING PAD RECESSES SHALL BE CONSTRUCTED AND FASTENED IN SUCH A MANNER AS TO NOT CAUSE DAMAGE TO THE GIRDER DURING THE STRAND RELEASE OPERATION.

TYPICAL ELEVATION AT END SEGMENT

END TYPE A SHOWN, OTHER END TYPES SIMILAR

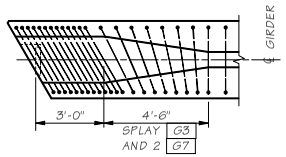

TYPICAL END ELEVATION AT CLOSURE

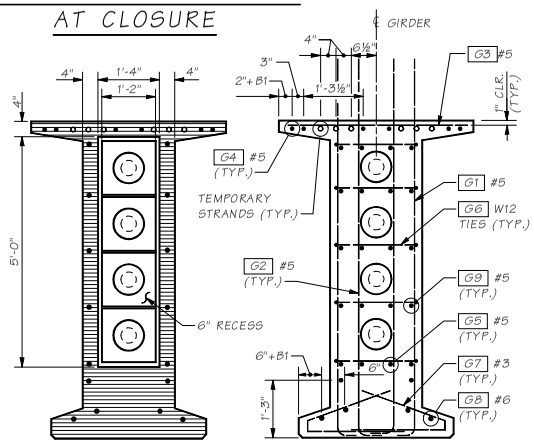

TRANSVERSE REINFORCING AT SKEWED ENDS

ONLY TRANSVERSE REINFORCING SHOWN

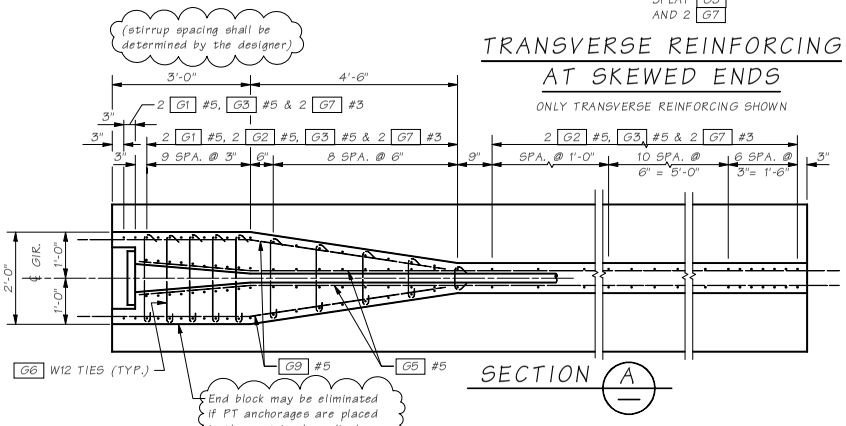

SECTION A

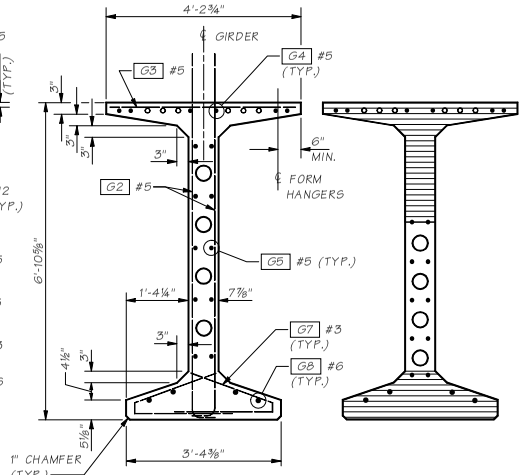

VIEW B

SAWTEETH SHOWN BY HATCHED AREA.

SECTION C

FOR "B1" SEE GIRDER DETAILS 3 OF 5

SECTION D

4

VIEW E

SAWTEETH SHOWN BY HATCHED AREA.

4

Bridge Design Engr.	M:\STANDARDS\Girders\PT Wide Flange\WF83PTG2.MAN				REGION NO.	STATE	FED. AID PROJ. NO.	SHEET NO.	TOTAL SHEETS
Supervisor					10	WASH.			
Designed By					JOB NUMBER				
Checked By									
Detailed By									
Bridge Projects Engr.									
Prelim. Plan By									
Architect/Specialist	DATE	REVISION	BY	APP'D					

BRIDGE AND STRUCTURES OFFICE

Washington State Department of Transportation

STANDARD PRESTRESSED CONCRETE GIRDERS

WF83PTG SPLICED GIRDER DETAILS 2 OF 5

BRIDGE SHEET NO. SHEET OF SHEETS

SR JOB NO. SHEET 5.9-A2-2

Tue Feb 05 09:20:28 2008

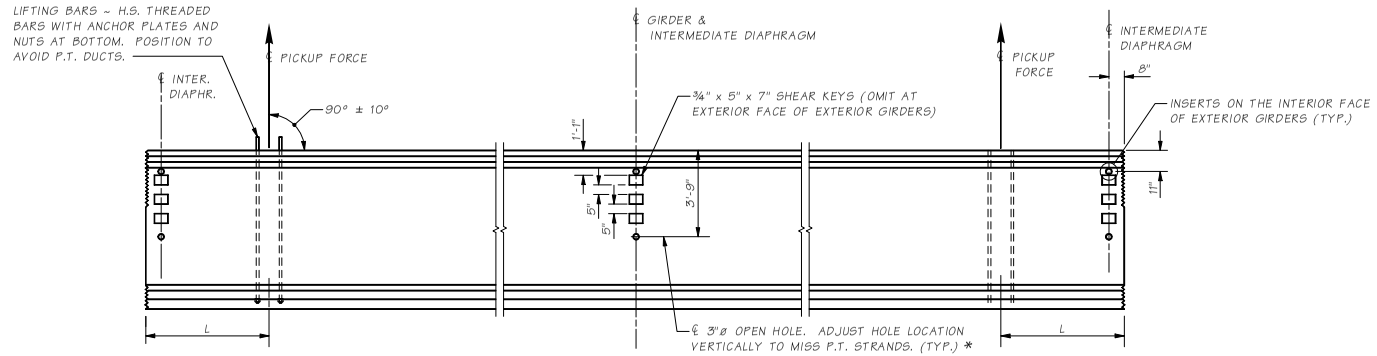

GIRDER ELEVATION
MID-SEGMENT

* OMIT HOLES AND PLACE INSERTS ON THE INTERIOR FACE OF EXTERIOR GIRDERS. PLACE HOLES AND INSERTS PARALLEL TO SKEW. INSERTS SHALL BE 1"ø BURKE HI-TENSILE, LANCASTER MALLEABLE, DAYTON-SUPERIOR F-62 FLARED THIN SLAB (1" x 4⅝") FERRULE INSERT OR APPROVED EQUAL. (TYP.)

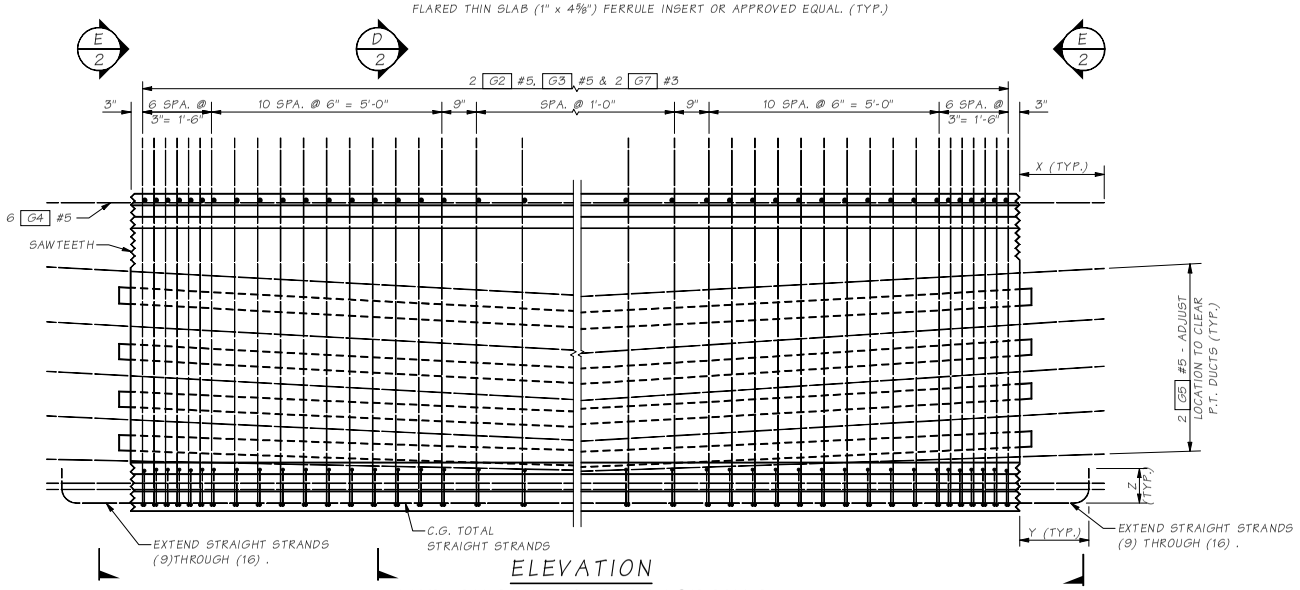

ELEVATION
MID-SEGMENT REINFORCING

Bridge Design Engr.	M:\STANDARDS\Girders\PT Wide Flange\WF83PTG4.MAN				REGION NO.	STATE	FED. AID PROJ. NO.	SHEET NO.	TOTAL SHEETS	BRIDGE AND STRUCTURES OFFICE
Supervisor					10	WASH.				Washington State Department of Transportation
Designed By					JOB NUMBER					STANDARD PRESTRESSED CONCRETE GIRDERS
Checked By										WF83PTG SPLICED GIRDER DETAILS 4 OF 5
Detailed By										BRIDGE SHEET NO. SHEET OF SHEETS
Bridge Projects Engr.										
Prelim. Plan By										
Architect/Specialist	DATE	REVISION	BY	APP'D						

SR ____ JOB NO. ____ SHEET ____

5.9-A2-4

Tue Feb 05 09:20:35 2008

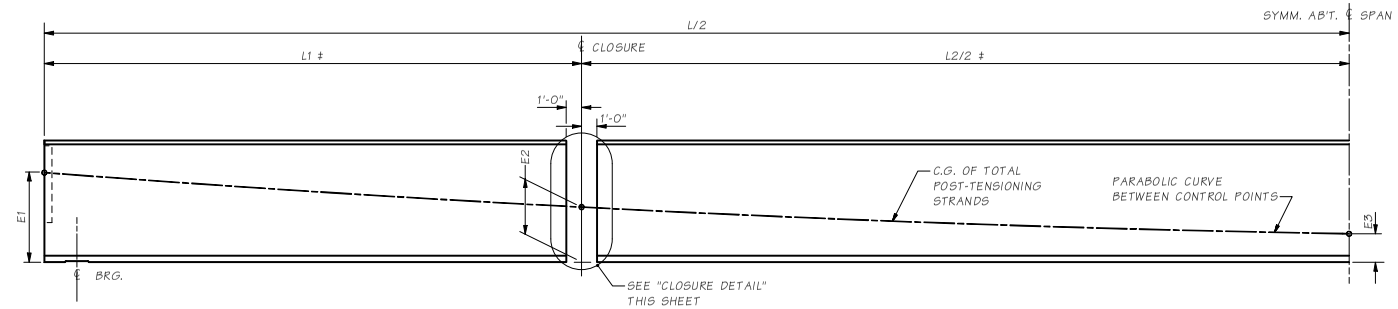

PRECAST END SEGMENT

PRECAST MID-SEGMENT

PRECAST LONGITUDINAL HALF-SECTION

SHOWING POST-TENSIONING CABLE PATHS
± MEASURED BEFORE POST-TENSIONING.

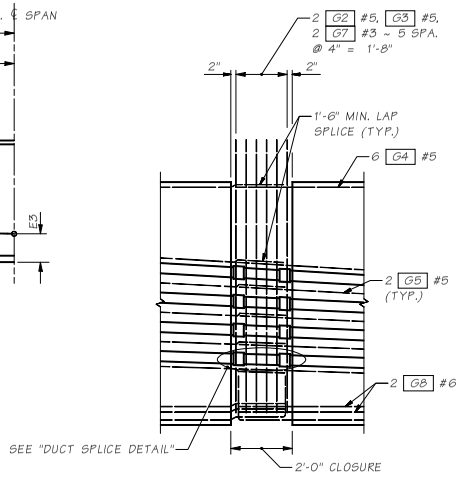

CLOSURE DETAIL

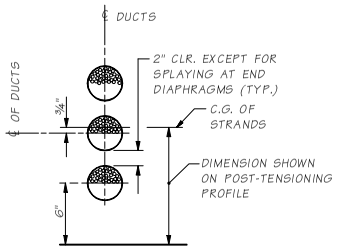

TENDON IN SAG CURVE

STRAND LOCATION DETAIL

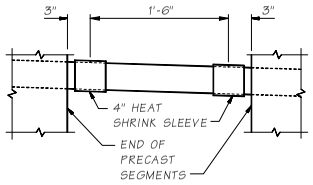

DUCT SPLICE DETAIL

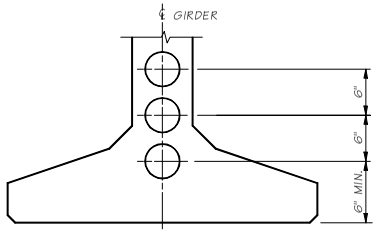

POST-TENSIONING STRAND PATTERN AT ℄ SPAN

POST-TENSIONING TABLE

SPAN	GIRDER	MIN. CONC. COMPRESSIVE STRENGTH (KSI)		NUMBER OF STRANDS	PRESTRESSING LOAD (KIPS)		TOTAL PRESTRESS LOSS (KSI)	E1 (IN.)	E2 (IN.)	E3 (IN.)	TEMPORARY STRANDS	
		GIRDER	CLOSURE		JACKING	AFTER SEATING					NUMBER OF STRANDS	JACKING FORCE (KIPS)

POST-TENSIONING NOTES

1. THE MINIMUM COMPRESSIVE STRENGTH OF THE CAST-IN-PLACE CONCRETE AT THE CLOSURE AT THE TIME OF POST-TENSIONING SHALL BE AS SHOWN IN POST-TENSIONING TABLE.
2. THE MAXIMUM OUTSIDE DIAMETER OF THE DUCT SHALL BE ??? INCHES. THE AREA OF THE DUCT SHALL BE AT LEAST 2.5 TIMES THE NET AREA OF THE PRESTRESSING STEEL IN THE DUCT.
3. THE DESIGN IS BASED ON [½"ø OR 0.6"ø] LOW RELAXATION STRANDS WITH AN ANCHOR SET OF 3/8", A CURVATURE FRICTION COEFFICIENT, μ = 0.20 AND A WOBBLE FRICTION COEFFICIENT, k = 0.0002/FT. THE ACTUAL ANCHOR SET AND JACKING FORCE USED BY THE CONTRACTOR SHALL BE SPECIFIED IN THE SHOP PLANS AND INCLUDED IN THE TRANSFER FORCE CALCULATIONS.
4. THE DESIGN IS BASED ON THE ESTIMATED PRESTRESS LOSS OF POST-TENSIONING STRANDS SHOWN IN THE POST-TENSIONING TABLE DUE TO STEEL RELAXATION, ELASTIC SHORTENING CREEP AND SHRINKAGE OF CONCRETE.
5. THE CONTRACTOR SHALL SUBMIT THE STRESSING SEQUENCE AND ELONGATION CALCULATIONS TO THE ENGINEER FOR APPROVAL. ALL LOSSES DUE TO TENDON VERTICAL AND HORIZONTAL CURVATURE MUST BE INCLUDED IN ELONGATION CALCULATIONS. THE STRESSING SEQUENCE SHALL MEET THE FOLLOWING CRITERIA:
   A. THE PRESTRESSING FORCE SHALL BE DISTRIBUTED WITH AN APPROXIMATELY EQUAL AMOUNT IN EACH WEB AND SHALL BE PLACED SYMMETRICALLY ABOUT THE CENTERLINE OF THE BRIDGE.
   B. NO MORE THAN ONE-HALF OF THE PRESTRESSING FORCE IN ANY WEB MAY BE STRESSED BEFORE AN EQUAL FORCE IS STRESSED IN THE ADJACENT WEBS. AT NO TIME DURING STRESSING OPERATION WILL MORE THAN 1/6 OF THE TOTAL PRESTRESSING FORCE IS APPLIED ECCENTRICALLY ABOUT THE CENTERLINE OF THE BRIDGE.
6. ALL TENDONS SHALL BE STRESSED FROM ONE END.
7. TEMPORARY STRANDS SHALL BE POST-TENSIONED IN ACCORDANCE WITH SECTION 6-02.3(25)L OF THE STANDARD SPECIFICATIONS. TEMPORARY STRANDS MAY BE POST-TENSIONED ON THE SAME DAY THE PRETENSIONING IS RELEASED INTO THE GIRDER.

Bridge Design Engr.	M:\STANDARDS\Girders\PT Wide Flange\WF95PTG1.MAN				REGION NO.	STATE	FED. AID PROJ. NO.	SHEET NO.	TOTAL SHEETS
Supervisor					10	WASH.			
Designed By					JOB NUMBER				
Checked By									
Detailed By									
Bridge Projects Engr.									
Prelim. Plan By									
Architect/Specialist	DATE	REVISION	BY	APP'D					

BRIDGE AND STRUCTURES OFFICE

Washington State Department of Transportation

STANDARD PRESTRESSED CONCRETE GIRDERS

WF95PTG SPLICED GIRDER DETAILS 1 OF 5

BRIDGE SHEET NO. — SHEET — OF — SHEETS

SR — JOB NO. — SHEET

5.9-A3-1

Tue Feb 05 09:20:46 2008

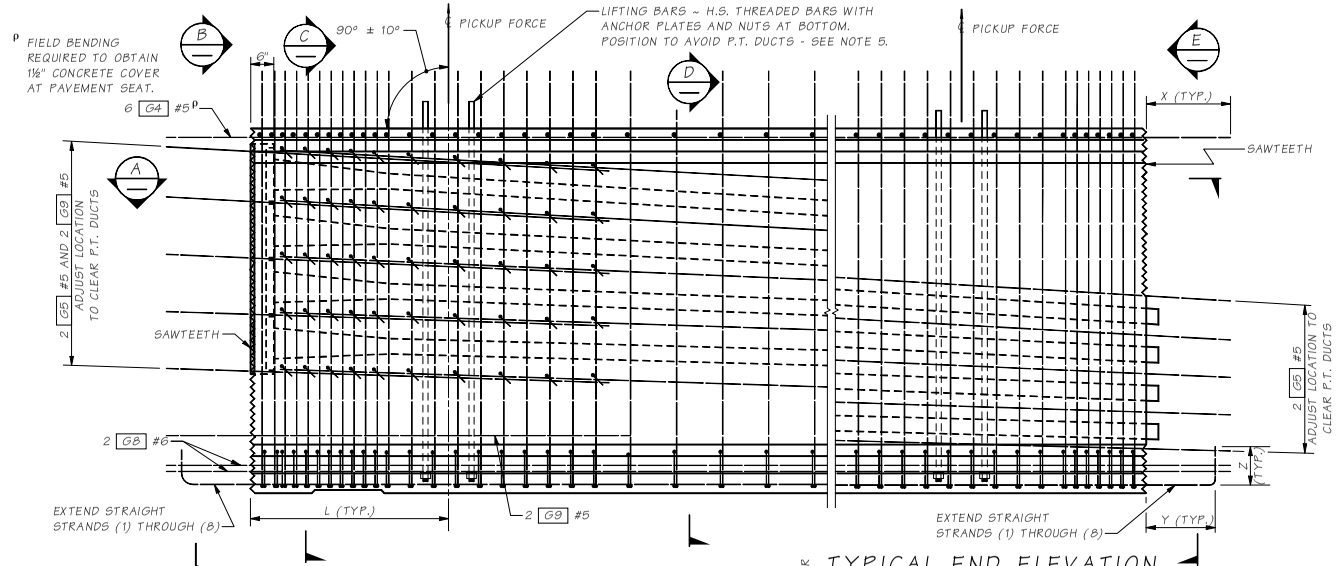

TYPICAL ELEVATION AT END SEGMENT

END TYPE A SHOWN, OTHER END TYPES SIMILAR

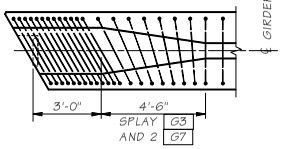

TYPICAL END ELEVATION AT CLOSURE

TRANSVERSE REINFORCING AT SKEWED ENDS

ONLY TRANSVERSE REINFORCING SHOWN

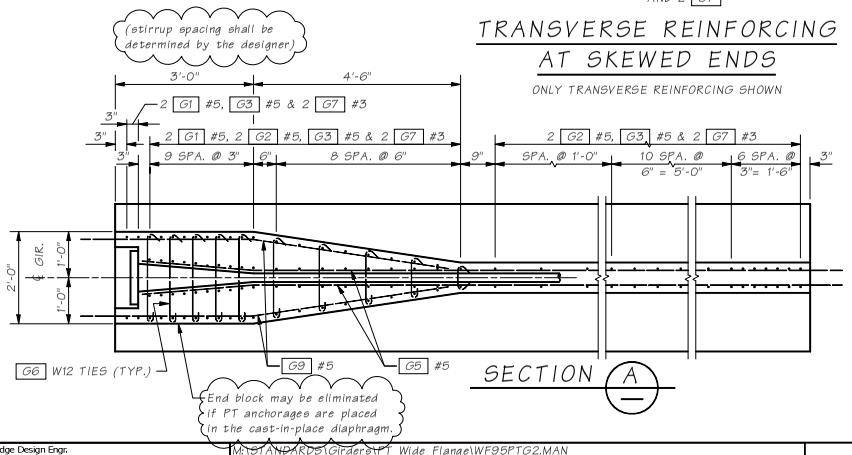

SECTION A

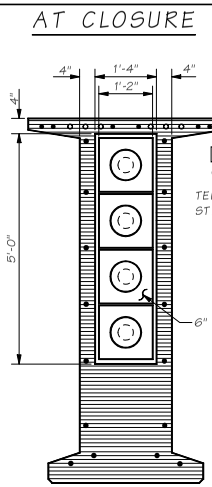

VIEW B

SAWTEETH SHOWN BY HATCHED AREA.

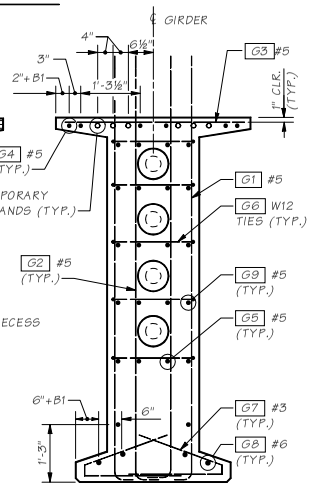

SECTION C

FOR "B1" SEE GIRDER DETAILS 3 OF 5

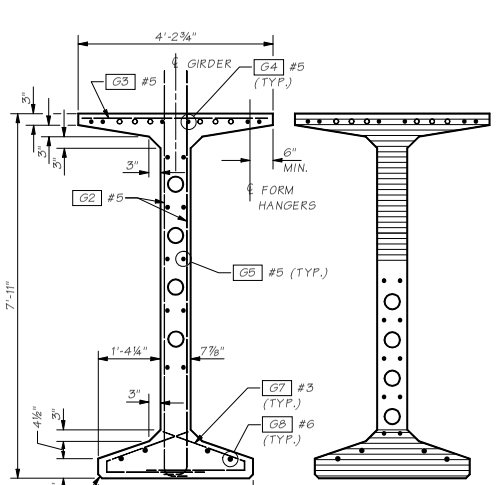

SECTION D

VIEW E

SAWTEETH SHOWN BY HATCHED AREA.

PRE-TENSIONING NOTES

1. PLAN LENGTH SHALL BE INCREASED AS NECESSARY TO COMPENSATE FOR SHORTENING DUE TO PRESTRESS AND SHRINKAGE.
2. ALL PRETENSIONED AND TEMPORARY STRANDS SHALL BE [½"ø OR 0.6"ø] LOW RELAXATION STRANDS (AASHTO M203 GRADE 270.)
3. FOR END TYPES A, C, D AND E CUT ALL STRANDS FLUSH WITH THE GIRDER ENDS AND PAINT WITH AN APPROVED EPOXY RESIN, EXCEPT FOR EXTENDED STRANDS AS SHOWN. FOR END TYPE B CUT ALL STRANDS 1" BELOW CONCRETE SURFACE AND GROUT WITH AN APPROVED EPOXY GROUT.
4. THE TOP SURFACE OF THE GIRDER FLANGE SHALL BE ROUGHENED IN ACCORDANCE WITH SECTION 6-02.3(25)H OF THE STANDARD SPECIFICATIONS.
5. LIFTING EMBEDMENTS SHALL BE INSTALLED IN ACCORDANCE WITH SECTION 6-02.3(25)L OF THE STANDARD SPECIFICATIONS. CONTRACTOR TO DESIGN OTHER LIFTING MECHANISM IF THE GIRDER SECTION WEIGHT EXCEEDS 200 KIPS.
6. CAUTION SHALL BE EXERCISED IN HANDLING AND PLACING GIRDERS. ALL GIRDERS SHALL BE CHECKED BY THE CONTRACTOR TO ENSURE THAT THEY ARE BRACED ADEQUATELY TO PREVENT TIPPING AND TO CONTROL LATERAL BENDING DURING SHIPPING. ONCE ERECTED, ALL GIRDERS SHALL BE BRACED LATERALLY TO PREVENT TIPPING UNTIL THE DIAPHRAGMS ARE CAST AND CURED.
7. FORMS FOR BEARING PAD RECESSES SHALL BE CONSTRUCTED AND FASTENED IN SUCH A MANNER AS TO NOT CAUSE DAMAGE TO THE GIRDER DURING THE STRAND RELEASE OPERATION.

Bridge Design Engr.	M:\STANDARDS\Girders\PT Wide Flange\WF95PTG2.MAN				REGION NO.	STATE	FED. AID PROJ. NO.	SHEET NO.	TOTAL SHEETS
Supervisor					10	WASH.			
Designed By					JOB NUMBER				
Checked By									
Detailed By									
Bridge Projects Engr.									
Prelim. Plan By									
Architect/Specialist	DATE	REVISION	BY	APP'D					

BRIDGE AND STRUCTURES OFFICE

Washington State Department of Transportation

STANDARD PRESTRESSED CONCRETE GIRDERS

WF95PTG SPLICED GIRDER DETAILS 2 OF 5

BRIDGE SHEET NO. SHEET OF SHEETS

SR JOB NO. SHEET 5.9-A3-2

Tue Feb 05 09:20:56 2008

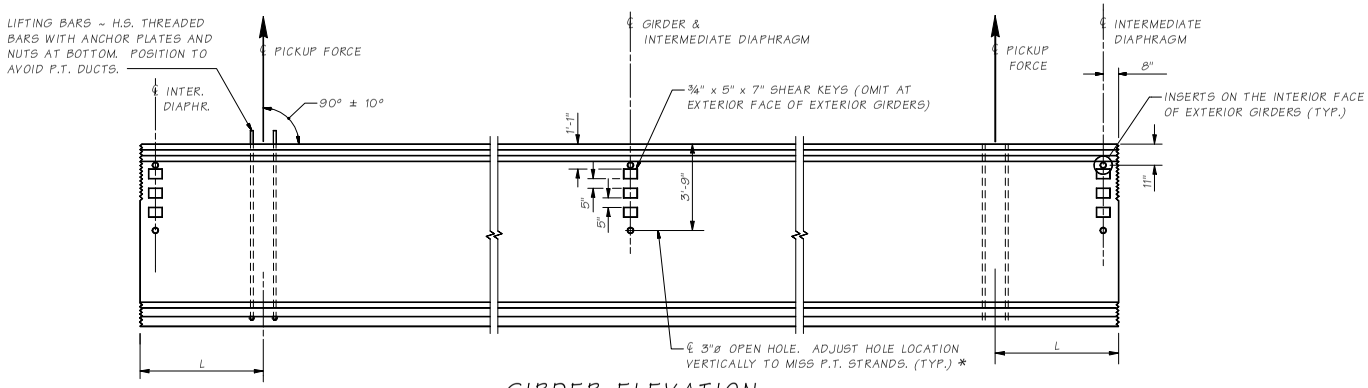

GIRDER ELEVATION
MID-SEGMENT

* OMIT HOLES AND PLACE INSERTS ON THE INTERIOR FACE OF EXTERIOR GIRDERS. PLACE HOLES AND INSERTS PARALLEL TO SKEW. INSERTS SHALL BE 1"ø BURKE HI-TENSILE, LANCASTER MALLEABLE, DAYTON-SUPERIOR F-62 FLARED THIN SLAB (1" x 4⅝") FERRULE INSERT OR APPROVED EQUAL. (TYP.)

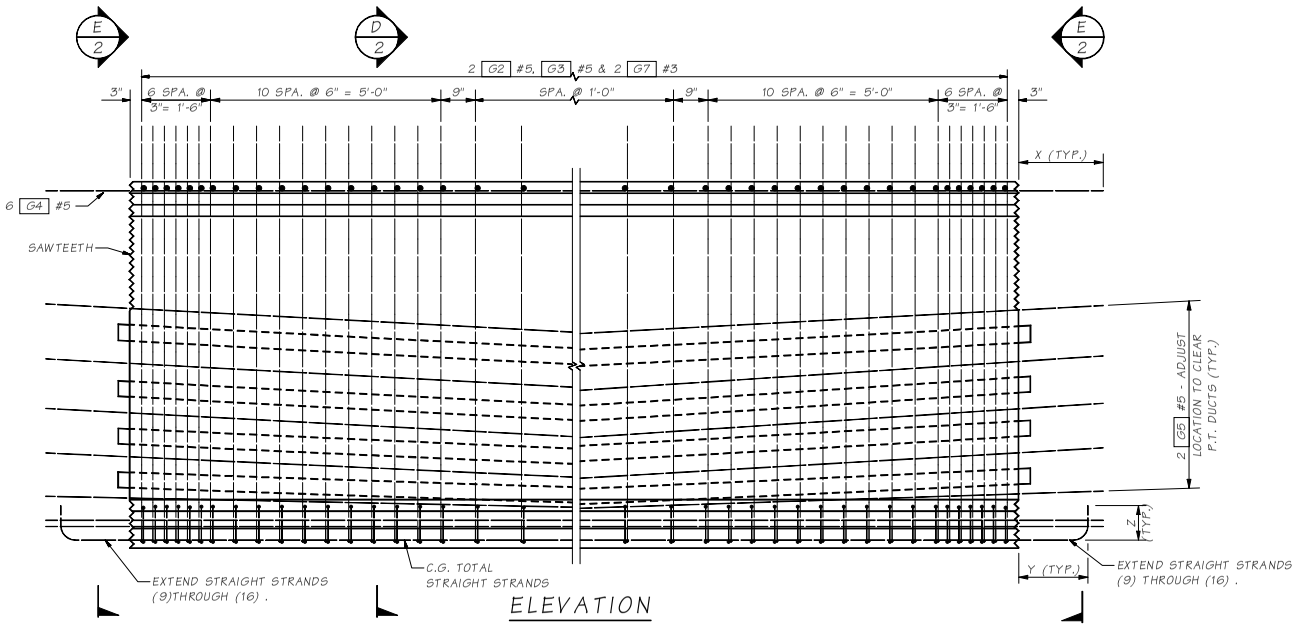

ELEVATION
MID-SEGMENT REINFORCING

Bridge Design Engr.	M:\STANDARDS\Girders\PT Wide Flange\WF95PTG4.MAN				REGION NO.	STATE	FED. AID PROJ. NO.	SHEET NO.	TOTAL SHEETS	BRIDGE AND STRUCTURES OFFICE
Supervisor					10	WASH.				Washington State Department of Transportation
Designed By					JOB NUMBER					STANDARD PRESTRESSED CONCRETE GIRDERS
Checked By										WF95PTG SPLICED GIRDER DETAILS 4 OF 5
Detailed By										
Bridge Projects Engr.										
Prelim Plan By										
Architect/Specialist	DATE	REVISION	BY	APP'D						

SR ____ SHEET ____ JOB NO. 5.9-A3-4

Tue Feb 05 09:21:07 2008

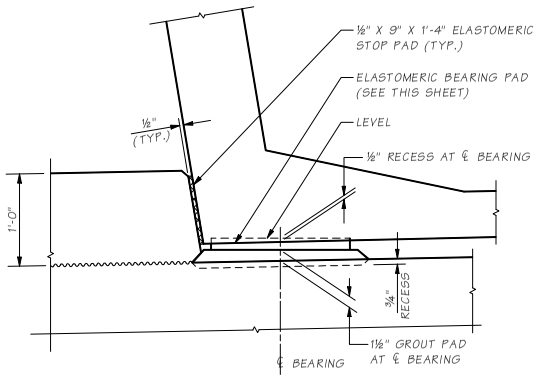

DETAIL G

NOTES:

1. GIRDER STOPS SHALL BE CONSTRUCTED AFTER GIRDER PLACEMENT.
2. ELASTOMERIC STOP PADS SHALL BE CEMENTED TO GIRDER STOP WITH APPROVED ADHESIVE.

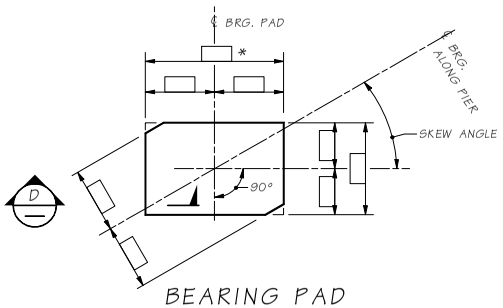

BEARING PAD

LAMINATED ELASTOMERIC BRIDGE PAD ☐ THICK (☐ SHIMS).

Skew angle shown at 30°.

* The edge of the bearing pad shall be set at 1" from the edge of the bottom flange.

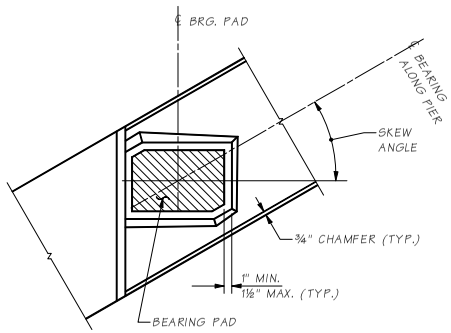

GROUT PAD DETAIL

Skew angle shown at 30°.

Bridge Design Engr.	M:\STANDARDS\Girders\PT Trapezoidal Tubs\PT_TUB MISC DETAILS.MAN				REGION NO.	STATE	FED. AID PROJ. NO.	SHEET NO.	TOTAL SHEETS	BRIDGE AND STRUCTURES OFFICE
Supervisor					10	WASH.				Washington State Department of Transportation
Designed By					JOB NUMBER					STANDARD PRESTRESSED CONCRETE GIRDERS
Checked By										TRAPEZOIDAL TUB SPLICED GIRDER MISCELLANEOUS BEARING DETAILS
Detailed By										BRIDGE SHEET NO. / SHEET / OF / SHEETS
Bridge Projects Engr.										
Prelim. Plan By										
Architect/Specialist	DATE	REVISION	BY	APP'D						

SR ____ JOB NO. ____ SHEET ____

5.9-A4-1

Wed Oct 31 09:22:51 2007

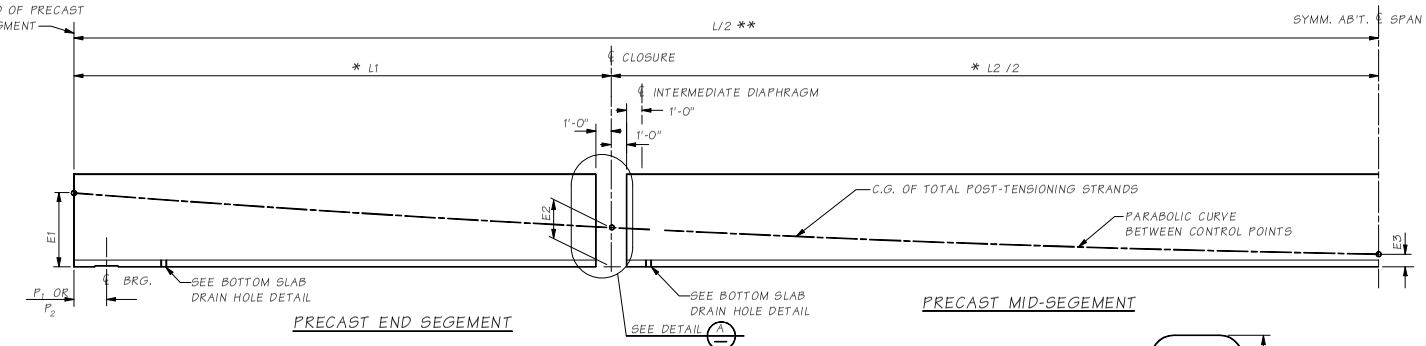

PRECAST LONGITUDINAL HALF-SECTION

SHOWING POST-TENSIONING CABLE PATHS
* MEASURED BEFORE POST-TENSIONING.

** CONTRACTOR MAY ELECT TO CAST THE PT GIRDER IN ONE PIECE IF THE SHIPPING WEIGHT IS LESS THAN 182 KIPS & THE SHIPPING ROUTE ALLOWS THE SHIPMENT OF LONG GIRDERS.

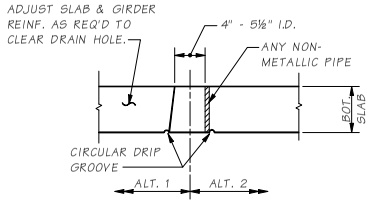

BOTTOM SLAB DRAIN HOLE

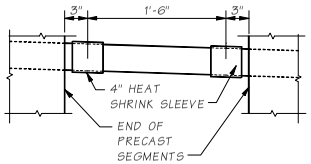

DUCT SPLICE DETAIL

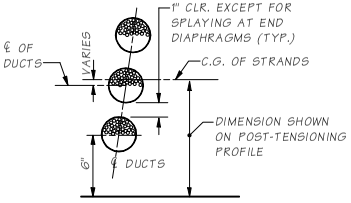

STRAND LOCATION DETAIL

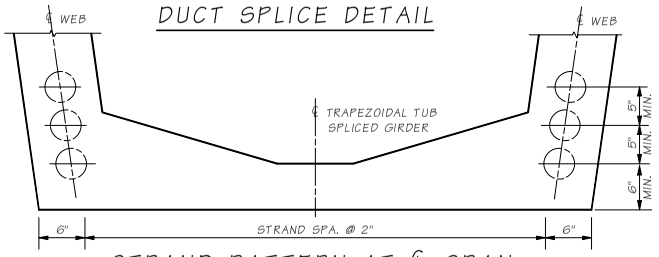

STRAND PATTERN AT ℄ SPAN

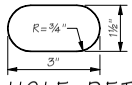

OPEN HOLE DETAIL

BOTTOM HOLE AT END TYPE "B" ONLY

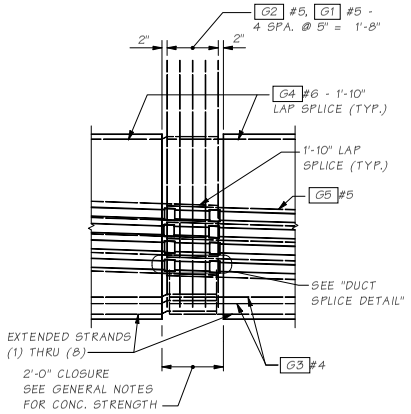

DETAIL A

POST-TENSIONING TABLE

SPAN	GIRDER	STRAND DIAMETER IN.	PRESSING LOAD PER WEB TOTAL KIPS		PRESTRESS LOSS KSI (TD+ES+FR+AS)	E_1 (IN.)	E_2 (IN.)	E_3 (IN.)
			JACKING	AFTER SEATING				

POST-TENSIONING NOTES

1. THE CAST-IN-PLACE CONCRETE IN DECK SLAB SHALL BE CLASS 4000D. THE MINIMUM COMPRESSIVE STRENGTH OF THE CAST-IN-PLACE CONCRETE AT THE WET JOINT AT THE TIME OF POST-TENSIONING SHALL BE ??? ksi.
2. THE MINIUM PRESTRESSING LOAD AFTER SEATING AND THE MINIMUM NUMBER OF PRESTRESSING STRANDS FOR EACH GIRDER SHALL BE AS SHOWN IN POST-TENSIONING TABLE.
3. THE DESIGN IS BASED ON ?? INCH DIAMETER LOW RELAXATION STRANDS WITH A JACKING LOAD FOR EACH GIRDER AS SHOWN IN POST-TENSIONING TABLE, AN ANCHOR SET OF ⅜ INCH OF CURVATURE FRICTION COEFFICIENT, μ = 0.20 AND A WOBBLE FRICTION COEFFICIENT, k = 0.0002/ft. THE ACTUAL ANCHOR SET USED BY THE CONTRACTOR SHALL BE SPECIFIED IN THE SHOP PLANS AND INCLUDED IN THE TRANSFER FORCE CALCULATIONS.
4. THE DESIGN IS BASED ON THE ESTIMATED PRESTRESS LOSS OF POST-TENSIONING STRANDS SHOWN IN POST-TENSIONING TABLE DUE TO STEEL RELAXATION, ELASTIC SHORTENING CREEP AND SHRINKAGE OF CONCRETE.
5. THE CONTRACTOR SHALL SUBMIT THE STRESSING SEQUENCE AND ELONGATION CALCULATIONS TO THE ENGINEER FOR APPROVAL. ALL LOSSES DUE TO TENDON VERTICAL AND HORIZONTAL CURVATURE MUST BE INCLUDED IN ELONGATION CALCULATIONS.
   A. THE PRESTRESSING FORCE SHALL BE DISTRIBUTED WITH AN APPROXIMATELY EQUAL AMOUNT IN EACH WEB AND SHALL BE PLACED SYMMETRICALLY ABOUT THE CENTERLINE OF THE TUB.
   B. NO MORE THAN ONE-HALF OF THE PRESTRESSING FORCE IN ANY WEB MAY BE STRESSED BEFORE AN EQUAL FORCE IS STRESSED IN THE ADJACENT WEBS. AT NO TIME DURING STRESSING OPERATION WILL MORE THAN ONE-SIXTH OF THE TOTAL PRESTRESSING FORCE IS APPLIED ECCENTRICALLY ABOUT THE CENTERLINE OF BRIDGE.
6. THE MAXIMUM OUTSIDE DIAMETER OF THE DUCT SHALL BE ??? INCHES. THE AREA OF THE DUCT SHALL BE AT LEAST 2.5 TIMES THE NET AREA OF THE PRESTRESSING STEEL IN THE DUCT.
7. ALL TENDONS SHALL BE STRESSED FROM PIER ??.
8. SIDE FORMS FROM INSIDE & OUTSDIE OF THE CLOSURES & CROSSBEAM SHALL BE REMOVED PRIOR TO POST-TENSIONING.

Bridge Design Engr.	M:\STANDARDS\Girders\PT Trapezoidal Tubs\PT_TRAPEZOIDAL TUB 1.MAN				REGION NO.	STATE	FED. AID PROJ. NO.	SHEET NO.	TOTAL SHEETS
Supervisor					10	WASH.			
Designed By					JOB NUMBER				
Checked By									
Detailed By									
Bridge Projects Engr.									
Prelim. Plan By									
Architect/Specialist	DATE	REVISION	BY	APP'D					

BRIDGE AND STRUCTURES OFFICE

Washington State Department of Transportation

STANDARD PRESTRESSED CONCRETE GIRDERS

TRAPEZOIDAL TUB SPLICED GIRDER DETAILS 1 OF 5

BRIDGE SHEET NO.

SHEET OF SHEETS

SR JOB NO. SHEET 5.9-A4-2

Wed Oct 31 09:23:54 2007

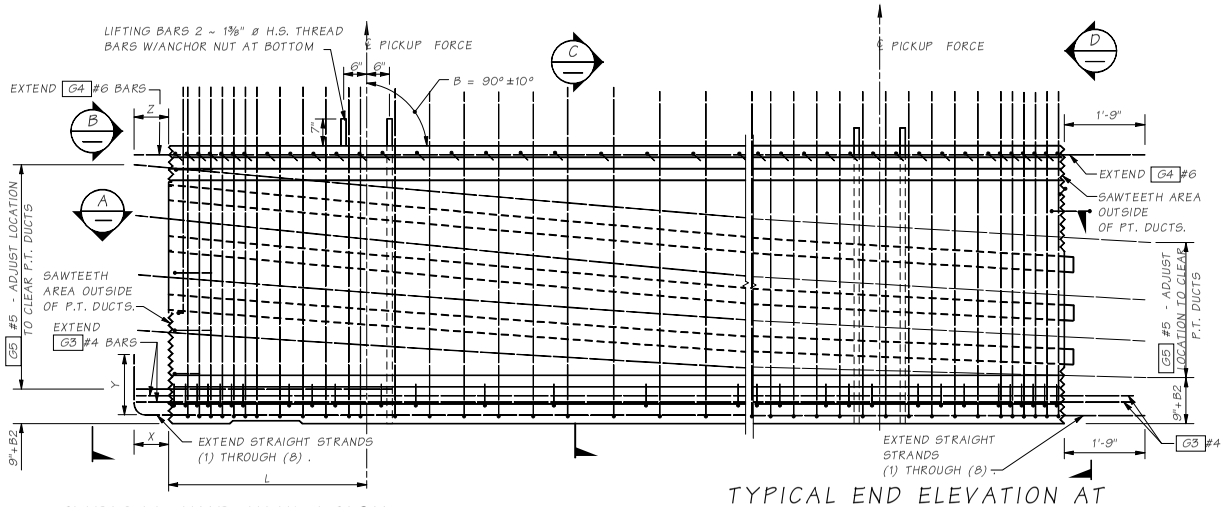

TYPICAL END ELEVATION AT END DIAPHRAGMS

TYPICAL END ELEVATION AT CLOSURE PLACEMENT

PRE-TENSIONING NOTES:

1. PLAN LENGTH SHALL BE INCREASED AS NECESSARY TO COMPENSATE FOR SHORTENING DUE TO PRESTRESS AND SHRINKAGE.
2. ALL STRAND FOR PRETENSIONING SHALL BE ??? DIAMETER LOW RELAXATION STRANDS (AASHTO M203, GRADE 270).
3. FOR END TYPES A, C AND D, CUT ALL STRANDS FLUSH WITH THE GIRDER ENDS AND PAINT WITH AN APPROVED EPOXY RESIN, EXCEPT FOR EXTENDED STRANDS AS SHOWN. FOR END TYPES B AND E CUT ALL STRANDS 1" BELOW CONCRETE SURFACE AND GROUT WITH AN APPROVED EPOXY GROUT.
4. EXTENDED STRANDS AND BARS ARE PARALLEL TO GIRDER.
5. LIFTING BARS SHALL BE 1 ⅜" DIAMETER HIGH STRENGTH THREADED BARS (AASHTO M275, GRADE 150 MINIMUM). LIFTING HARDWARE THAT CONNECTS TO THREADED BARS SHALL BE DESIGNED AND DETAILED BY THE CONTRACTOR. LIFTING FORCES ON THREAD BARS SHALL BE VERTICAL ONLY AND WITHIN 10 DEGREES OF PERPENDICULAR TO A LINE BETWEEN PICK POINTS. CONTRACTOR SHALL SUBMIT CALCULATIONS FOR APPROVAL BY THE ENGINEER IF LIFTING FORCES ARE TO BE OTHERWISE.
6. EXTRA CAUTION MUST BE EXERCISED IN HANDLING AND PLACING ALL GIRDERS. ALL GIRDERS SHALL BE CHECKED TO ENSURE THAT THEY ARE BRACED ADEQUATELY TO PREVENT TIPPING AND TO CONTROL LATERAL BENDING DURING SHIPPING.
7. THE TOP SURFACE OF THE GIRDER FLANGE SHALL BE ROUGHENED IN ACCORDANCE WITH SECTION 6-02.3(25)H.
8. FORMS FOR BEARING PAD RECESSES SHALL BE CONSTRUCTED AND FASTENED IN SUCH A MANNER AS NOT TO CAUSE DAMAGE TO THE GIRDER DURING STRAND RELEASE OPERATION.

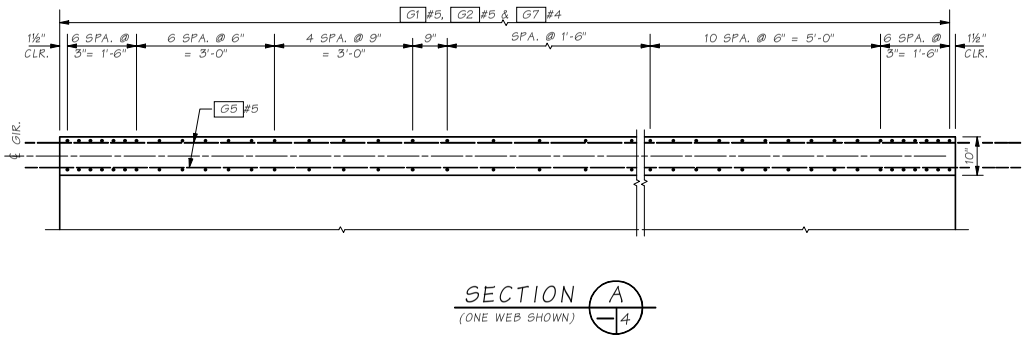

SECTION A (ONE WEB SHOWN)

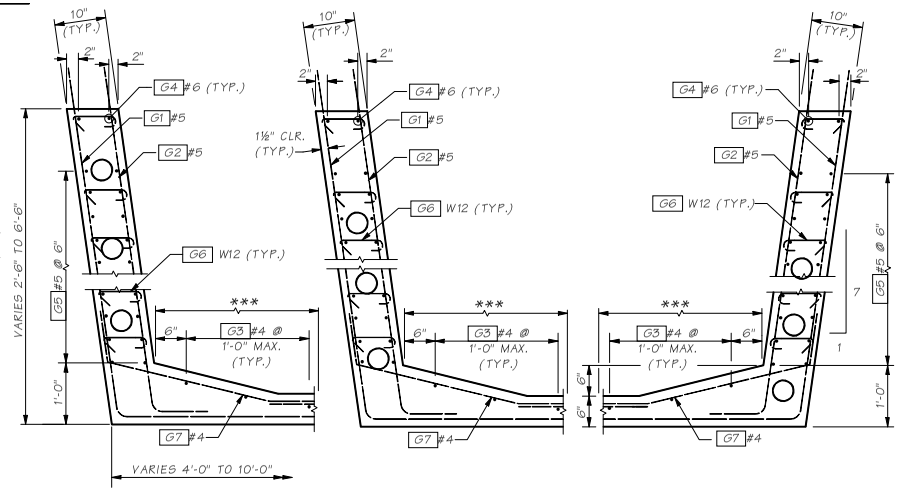

VIEW B SECTION C VIEW D

*** 1'-0" FOR BOTTOM FLANGE WIDTH LESS THAN 5'-6"
2'-0" FOR BOTTOM FLANGE WIDTH EQUAL OR GREATER THAN 5'-6"

Bridge Design Engr.	M:\STANDARDS\Girders\PT Trapezoidal Tubs\PT_TRAPEZOIDAL TUB 2.MAN								
Supervisor					REGION NO.	STATE	FED. AID PROJ. NO.	SHEET NO.	TOTAL SHEETS
Designed By					10	WASH.			
Checked By					JOB NUMBER				
Detailed By									
Bridge Projects Engr.									
Prelim. Plan By									
Architect/Specialist	DATE	REVISION	BY	APP'D					

BRIDGE AND STRUCTURES OFFICE

Washington State Department of Transportation

STANDARD PRESTRESSED CONCRETE GIRDERS

TRAPEZOIDAL TUB SPLICED GIRDER DETAILS 2 OF 5

BRIDGE SHEET NO. SHEET OF SHEETS

SR ... JOB NO. ... SHEET 2

5.9-A4-3

Wed Oct 31 09:23:49 2007

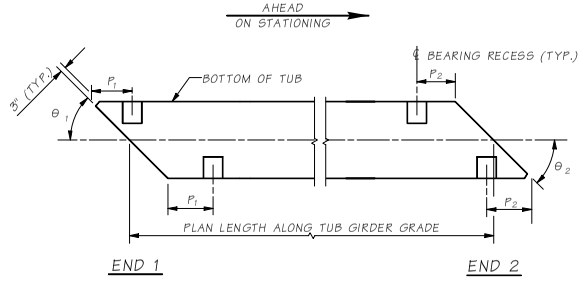

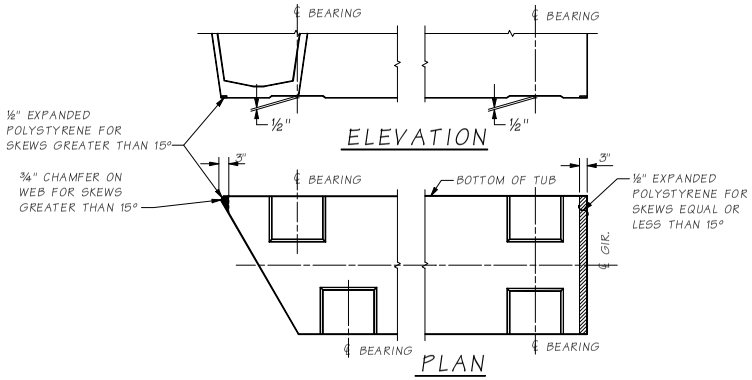

BOTTOM OF TUB SPALL PROTECTION

END TYPE "C" INTERMEDIATE HINGE DIAPHRAGM
AND END TYPE "D" INTEREMEDIATE FIXED DIAPHRAGM

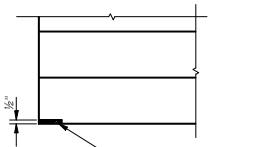

SECTION A

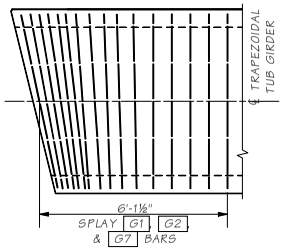

TRANSVERSE REINFORCING AT SKEWED ENDS

ONLY TRANSVERSE REINF. SHOWN

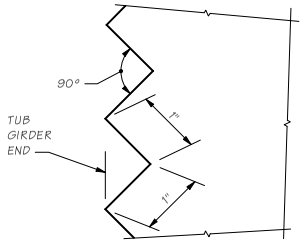

SAWTOOTH DETAILS

SAWTEETH ARE FULL WIDTH - USE SAWTEETH
FULL HEIGHT ON END SECTIONS.

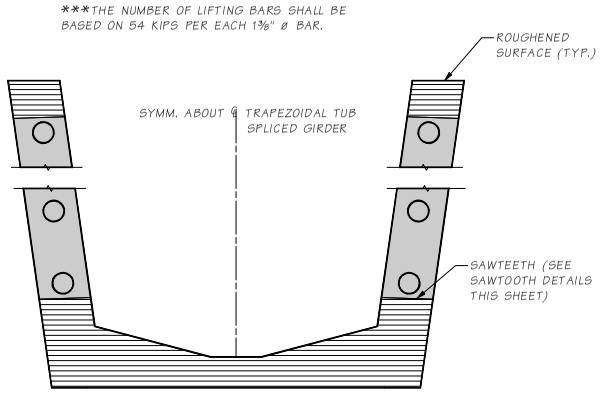

TYPICAL END ELEVATION

EXTENDED STRANDS NOT SHOWN.
USE SAWTOOTH KEYS FROM BOTTOM OF BOTTOM FLANGE
TO BOTTOM OF LOWEST HARPED STRANDS.

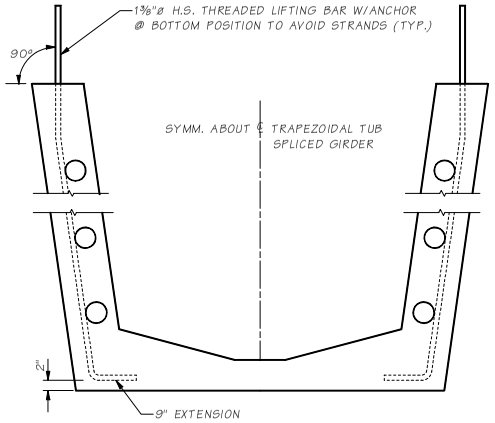

P.C. SECTION

BENDING DIAGRAM

MARK	LOCATION	SIZE	U	W	X	ALL DIMENSIONS ARE OUT TO OUT
G1	STIRRUPS, OUTSIDE WEB	5				
G2	STIRRUPS, INSIDE WEB	5				* = VARIES FOR SKEWED SPANS
G3	LONGITUDINAL BOTTOM FLANGE	4				STR.
G4	TOP WEB LONGIT.	6				STR.
G5	LONGITUDINAL WEB	5				STR.
G6	WEB TIE	W12				# #4 MAY BE SUBSTITUTED FOR W12, FIELD BENDING IS OPTIONAL
G7	WEB	4				

NOTE:
FOR DIMENSION "A", SEE "GIRDER SCHEDULE"

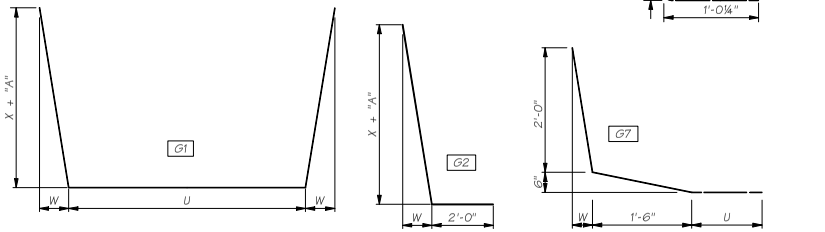

Bridge Design Engr.	M:\STANDARDS\Girders\PT Trapezoidal Tubs\PT_TRAPEZOIDAL TUB 3.MAN				REGION NO.	STATE	FED. AID PROJ. NO.	SHEET NO.	TOTAL SHEETS
Supervisor					10	WASH.			
Designed By					JOB NUMBER				
Checked By									
Detailed By									
Bridge Projects Engr.									
Prelim. Plan By									
Architect/Specialist	DATE	REVISION	BY	APPD					

BRIDGE AND STRUCTURES OFFICE

Washington State Department of Transportation

STANDARD PRESTRESSED CONCRETE GIRDERS

TRAPEZOIDAL TUB SPLICED GIRDER DETAILS 3 OF 5

BRIDGE SHEET NO. SHEET OF SHEETS

SR. 2 SHEET JOB NO. 5.9-A4-4

Wed Oct 31 09:23:44 2007

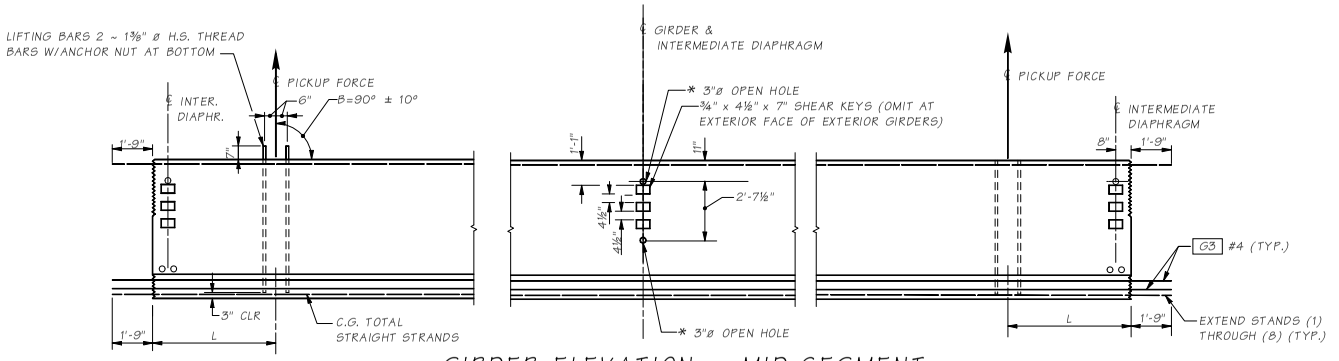

GIRDER ELEVATION ~ MID-SEGMENT

* OMIT HOLES AND PLACE INSERTS ON THE INTERIOR FACE OF EXTERIOR WEB. PLACE HOLES AND INSERTS PARALLEL TO SKEW. INSERTS SHALL BE 1" ø ROCKET/KOHLER, BURKE HI-TENSILE, LANCASTER MALLEABLE OR APPROVED EQUAL.

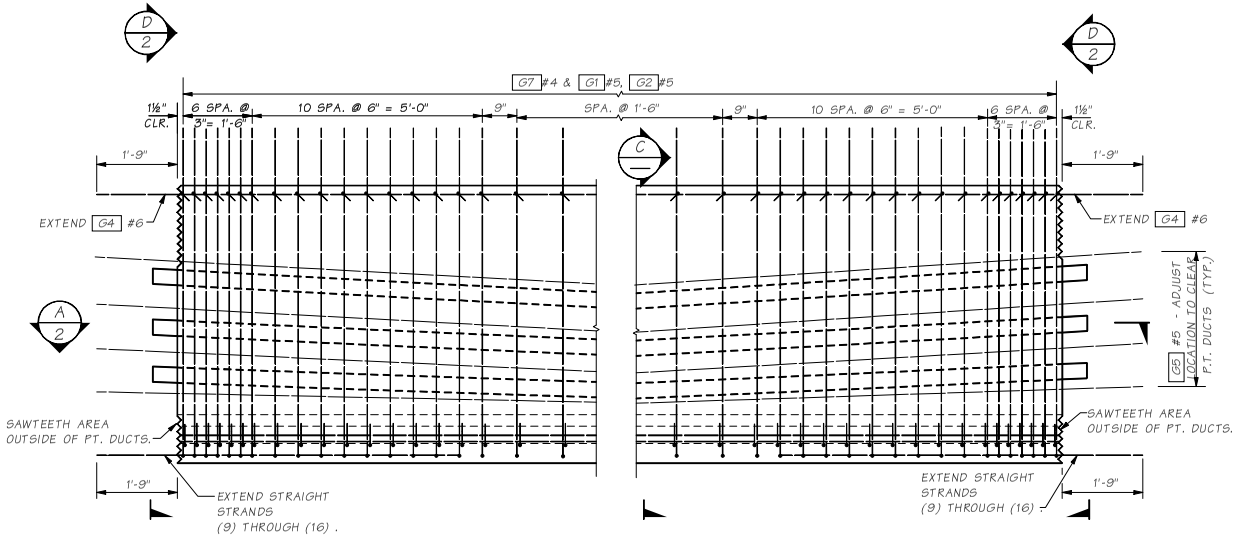

TYPICAL MID-SEGMENT ELEVATION

Bridge Design Engr.	M:\STANDARDS\Girders\PT Trapezoidal Tubs\PT_TRAPEZOIDAL TUB 4.MAN				REGION NO.	STATE	FED. AID PROJ. NO.	SHEET NO.	TOTAL SHEETS
Supervisor					10	WASH.			
Designed By					JOB NUMBER				
Checked By									
Detailed By									
Bridge Projects Engr.									
Prelim. Plan By									
Architect/Specialist	DATE	REVISION	BY	APP'D					

BRIDGE AND STRUCTURES OFFICE

Washington State Department of Transportation

STANDARD PRESTRESSED CONCRETE GIRDERS

TRAPEZOIDAL TUB SPLICED GIRDER DETAILS 4 OF 5

BRIDGE SHEET NO.

SHEET OF SHEETS

SR 5.9-A4-5 JOB NO. SHEET

Wed Oct 31 09:23:40 2007

DIMENSION "A" AT ℄ BEARINGS = SEE "A" DIMENSION TABLE

SPAN	GIRDER	END SEGMENT 1												MID-SEGMENT												END SEGMENT 2											
		MINIMUM CONCRETE COMPR. STRENGTH		END 1 TYPE	END 2 TYPE	L	θ1 (DEG.)	θ2 (DEG.)	P1	PLAN LENGTH (ALONG ℄ GIRDER GRADE)	STRAIGHT		C.G. STRANDS	Ld	END 1 TYPE	END 2 TYPE	L	θ1 (DEG.)	θ2 (DEG.)	PLAN LENGTH (ALONG ℄ GIRDER GRADE)	STRAIGHT		C.G. STRANDS	Ld	END 1 TYPE	END 2 TYPE	L	θ1 (DEG.)	θ2 (DEG.)	P2	PLAN LENGTH (ALONG ℄ GIRDER GRADE)	STRAIGHT		C.G. STRANDS	Ld
		@ FINAL F'C (KSI)	@ RELEASE F'CI (KSI)								NO. OF STRANDS	JACKING FORCE (KIPS)	E									NO. OF STRANDS	JACKING FORCE (KIPS)	E										NO. OF STRANDS	JACKING FORCE (KIPS)	E	

NOTES TO DESIGNER:

1. This strand extension detail is to be used for continuous spans at moment resisting diaphragms only.This detail is not applicable to continuous spans using hinge diaphragms.
2. Designer shall calculate the exact number of extended straight strands needed to develop the required moment capacity at the end of the girder. This calculation shall be based on the tensile strength of the strands, the stresses imposed on the anchor, and concrete bearing against the projected area of the anchor.
   The total number of extended strands shall not be less than:
3. $Nps = 12(Mc + Vc \times h - M_{SIDL}) \times Nc \frac{K}{Ng (0.9\ Aps \times fps \times d)}$

where:
Mc, Vc = The lesser of Elastic or Plastic hinging moment & shear capacity of column Ft-kips, kips respectively.
h = distance from top of column to c.g. of superstructure, Ft
Nc = number of columns
Ng = number of girders
Aps = area of each extended strand, in
fps = ultimate strength of strands, ksi
d = distance from top of slab to c.g. of extended strands, in
M = Moment due to SIDL (Traffic barrier, sidewalk, etc.)
K = 0.5 for L1 = L2
0.67 for L1 = 2L2

NOTE:
Dimensions shall be shown in imperial units to the nearest 1/8th inch.

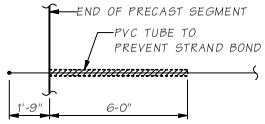

STRAND DEBONDING DETAIL

STRAND PATTERN

STRAND LOCATION SEQUENCE SHALL BE AS SHOWN (1), (2) ETC.

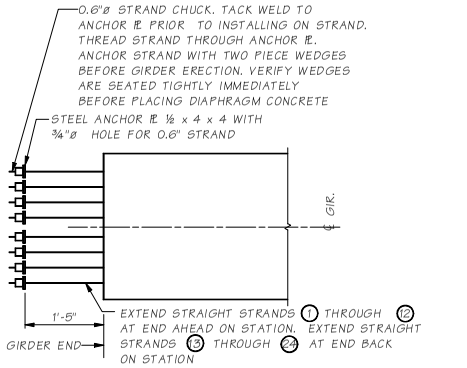

ALTERNATE # 1

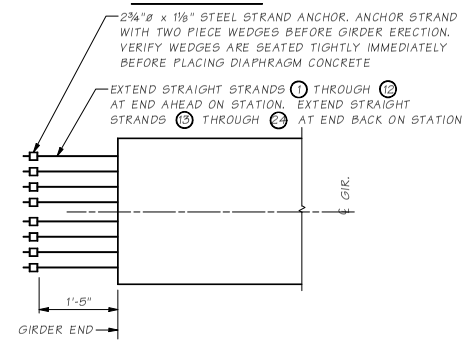

ALTERNATE # 2

STRAND EXTENSION DETAIL FOR END TYPE D

NOT ALL EXTENDED STRANDS ARE SHOWN

Bridge Design Engr.	M:\STANDARDS\Girders\PT Trapezoidal Tubs\PT_TRAPEZOIDAL TUB 5.MAN				REGION NO.	STATE	FED. AID PROJ. NO.	SHEET NO.	TOTAL SHEETS	BRIDGE AND STRUCTURES OFFICE	Washington State Department of Transportation	STANDARD PRESTRESSED CONCRETE GIRDERS	BRIDGE SHEET NO.
Supervisor					10	WASH.							
Designed By					JOB NUMBER							PRESTRESSED TRAPEZOIDAL TUB GIRDER DETAILS 5 OF 5	SHEET OF SHEETS
Checked By													
Detailed By													
Bridge Projects Engr.													
Prelim. Plan By													
Architect/Specialist	DATE	REVISION	BY	APP'D									

SR JOB NO. SHEET
5.9-A4-6
Wed Oct 31 09:23:35 2007

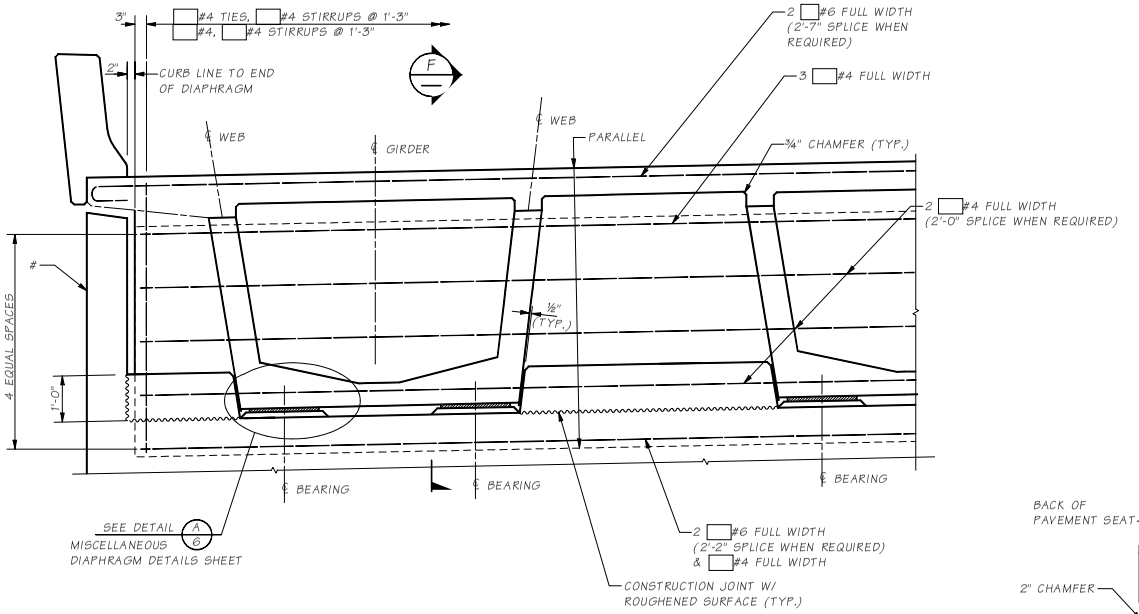

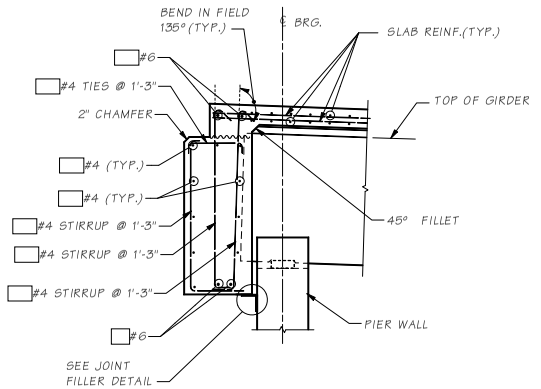

SECTION F

NOTE TO DESIGNER

If ground line is less than 2'-0" minimum below the bottom of girder at front face of abutment a curtain wall shall be provided.

TYPICAL END TYPE "A" DIAPHRAGM AT END PIERS

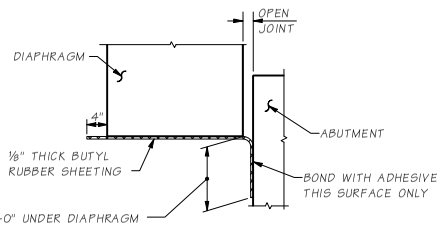

ELEVATION BUTYL RUBBER @ DIAPHRAGM

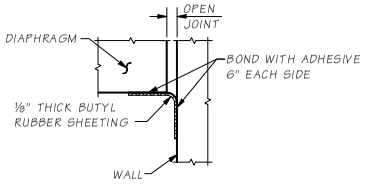

PLAN VIEW BUTYL RUBBER @ VERTICAL JOINTS

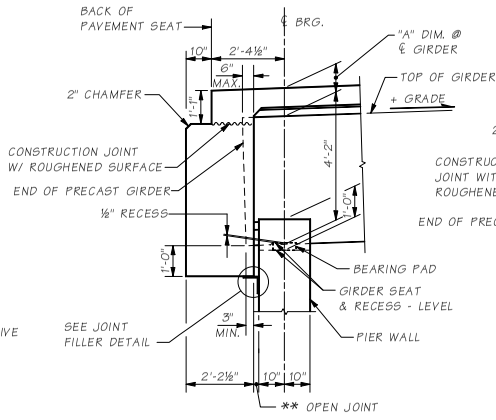

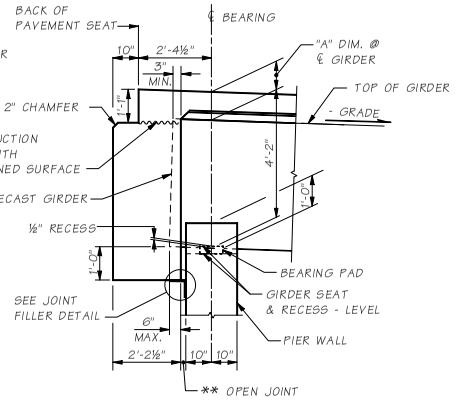

END DIAPHRAGM GEOMETRY

SECTIONS THROUGH END DIAPHRAGMS AT END PIERS
SEE "GIRDER DETAILS" SHEET FOR DIMENSION "A".
ALL LONGITUDINAL DIMENSIONS ARE NORMAL TO SKEW.

NOTE:

1. GIRDERS SHALL BE HELD RIGIDLY IN PLACE WHEN DIAPHRAGMS ARE PLACED.
2. REINFORCING BAR SHALL BE THREADED THROUGH HOLES IN GIRDERS PRIOR TO PLACING OF EXTERIOR GIRDERS. SEE PLANS FOR "TRAFFIC BARRIER" DIMENSIONS AND LOCATION. SEE "GIRDER DETAILS" SHEET FOR DIMENSION "A".
3. END DIAPHRAGM MAY BE CAST ON GRADE. IF SO, THE UPPER LEG OF THE JOINT FILLER SHALL FORM THE BOTTOM FACE FULL WIDTH.
4. JOINT FILLER TYPE 1 SHALL BE USED TO COVER ALL VERTICAL END DIAPHRAGM JOINTS. EITHER JOINT FILLER TYPE 1 OR JOINT FILLER TYPE 2 SHALL BE USED TO COVER ALL HORIZONTAL END DIAPHRAGM JOINTS.

BRIDGE LENGTH	JOINT
L≤200	** = 1.5 IN.
200<L≤300	** = 2.0 IN.
300<L≤400	** = 2.5 IN.
L>400	SPECIAL DESIGN

Bridge Design Engr.	M:\STANDARDS\Girders\PT Trapezoidal Tubs\PT_TUB_END_DIA.MAN				REGION NO.	STATE	FED. AID PROJ. NO.	SHEET NO.	TOTAL SHEETS
Supervisor					10	WASH.			
Designed By					JOB NUMBER				
Checked By									
Detailed By									
Bridge Projects Engr.									
Prelim. Plan By									
Architect/Specialist	DATE	REVISION	BY	APP'D					

BRIDGE AND STRUCTURES OFFICE

Washington State Department of Transportation

STANDARD PRESTRESSED CONCRETE GIRDERS

TRAPEZOIDAL TUB SPLICED GIRDER END DIAPHRAGM ON GIRDER DETAILS

BRIDGE SHEET NO. SHEET OF SHEETS

SR JOB NO. SHEET 5.9-A4-7

Wed Oct 31 09:23:25 2007

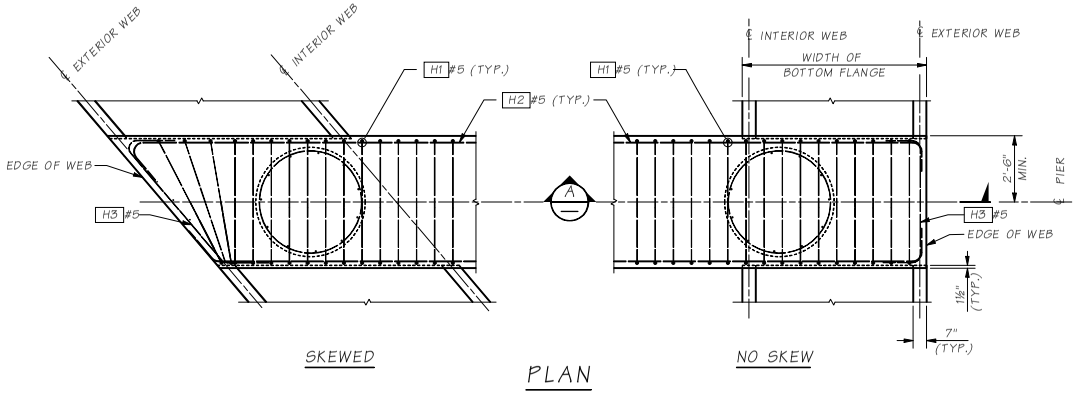

PLAN

FOR EXTENDED STRAND DETAIL SEE GIRDER SHEET 3.

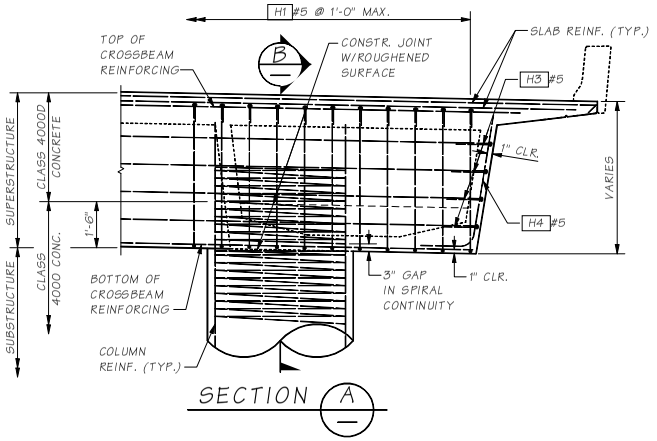

SECTION A

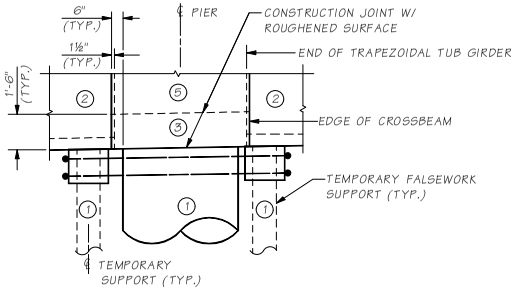

TEMPORARY SUPPORT DETAIL

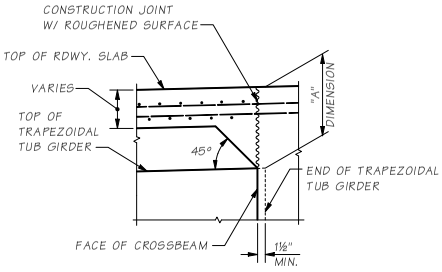

DETAIL C

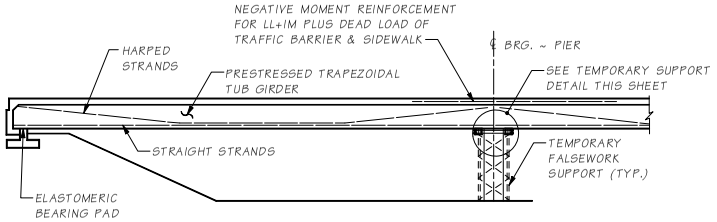

ELEVATION

CONSTRUCTION SEQUENCE

1. COLUMN & TEMP. SUPPORT
2. PLACE GIRDER ON TEMPORARY SUPPORT
3. CAST DIAPHRAGM STAGE 1
4. CAST ROADWAY SLAB
5. COMPLETE DIAPHRAGM
6. REMOVE TEMPORARY SUPPORT

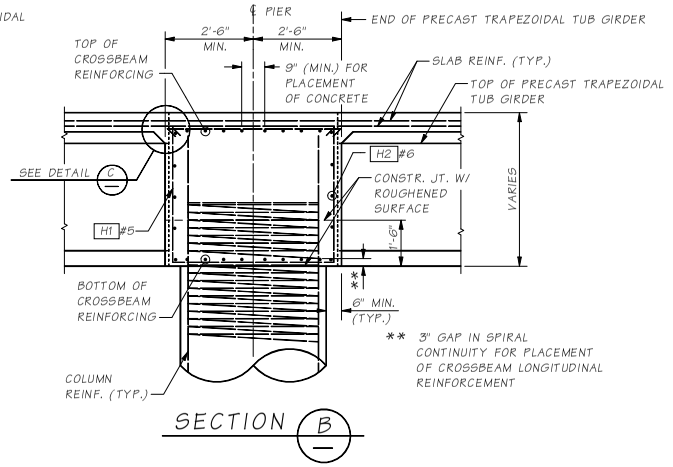

SECTION B

Bridge Design Engr.	M:\STANDARDS\Girders\PT Trapezoidal Tubs\PT_TRAPEZOIDAL TUB RAISED CROSSBEAM.MAN				REGION NO.	STATE	FED. AID PROJ. NO.	SHEET NO.	TOTAL SHEETS
Supervisor					10	WASH.			
Designed By					JOB NUMBER				
Checked By									
Detailed By									
Bridge Projects Engr.									
Prelim. Plan By									
Architect/Specialist	DATE	REVISION	BY	APP'D					

BRIDGE AND STRUCTURES OFFICE

Washington State Department of Transportation

STANDARD PRESTRESSED CONCRETE GIRDERS

TRAPEZOIDAL TUB SPLICED GIRDER RAISED CROSSBEAM DETAILS

BRIDGE SHEET NO. | SHEET | OF | SHEETS

SHEET
JOB NO. 5.9-A4-8
SR

Wed Oct 31 09:23:30 2007

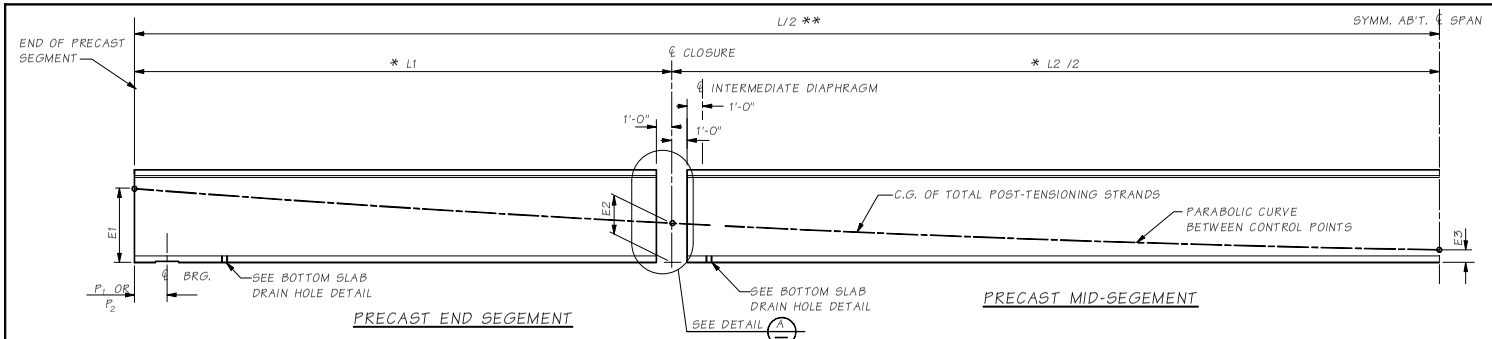

PRECAST LONGITUDINAL HALF-SECTION

SHOWING POST-TENSIONING CABLE PATHS
* MEASURED BEFORE POST-TENSIONING.

** CONTRACTOR MAY ELECT TO CAST THE PT GIRDER IN ONE PIECE IF THE SHIPPING WEIGHT IS LESS THAN 182 KIPS & THE SHIPPING ROUTE ALLOWS THE SHIPMENT OF LONG GIRDERS.

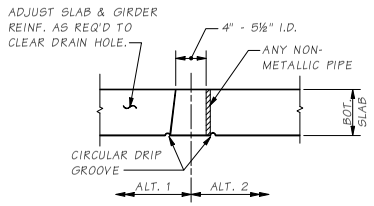

BOTTOM SLAB DRAIN HOLE

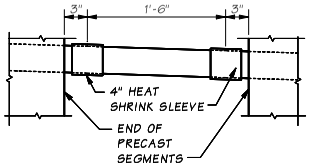

DUCT SPLICE DETAIL

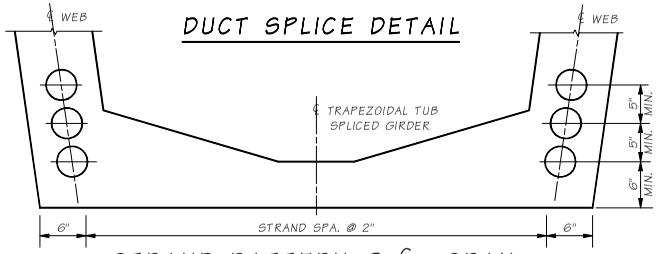

STRAND PATTERN @ ℄ SPAN

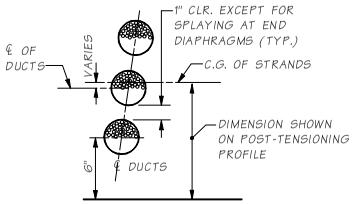

TENDON IN SAG CURVE

STRAND LOCATION DETAIL

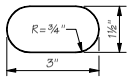

OPEN HOLE DETAIL

BOTTOM HOLE AT END TYPE "B" ONLY

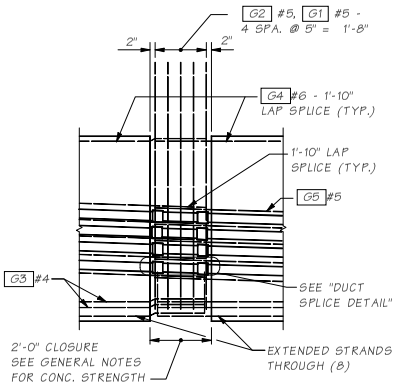

DETAIL A

POST-TENSIONING TABLE

SPAN	GIRDER	STRAND DIAMETER IN.	PRESSING LOAD PER WEB KIPS		TOTAL PRESTRESS LOSS KSI (DT+ES+FR+AS)	E_1 (IN.)	E_2 (IN.)	E_3 (IN.)
			JACKING	AFTER SEATING				

POST-TENSIONING NOTES

1. THE CAST-IN-PLACE CONCRETE IN DECK SLAB SHALL BE CLASS 4000D. THE MINIMUM COMPRESSIVE STRENGTH OF THE CAST-IN-PLACE CONCRETE AT THE WET JOINT AT THE TIME OF POST-TENSIONING SHALL BE ??? ksi.
2. THE MINIUM PRESTRESSING LOAD AFTER SEATING AND THE MINIMUM NUMBER OF PRESTRESSING STRANDS FOR EACH GIRDER SHALL BE AS SHOWN IN POST-TENSIONING TABLE.
3. THE DESIGN IS BASED ON ?? INCH DIAMETER LOW RELAXATION STRANDS WITH A JACKING LOAD FOR EACH GIRDER AS SHOWN IN POST-TENSIONING TABLE, AN ANCHOR SET OF ⅜ INCH OF CURVATURE FRICTION COEFFICIENT, μ = 0.20 AND A WOBBLE FRICTION COEFFICIENT, k = 0.0002/ft. THE ACTUAL ANCHOR SET USED BY THE CONTRACTOR SHALL BE SPECIFIED IN THE SHOP PLANS AND INCLUDED IN THE TRANSFER FORCE CALCULATIONS.
4. THE DESIGN IS BASED ON THE ESTIMATED PRESTRESS LOSS OF POST-TENSIONING STRANDS SHOWN IN POST-TENSIONING TABLE DUE TO STEEL RELAXATION, ELASTIC SHORTENING CREEP AND SHRINKAGE OF CONCRETE.
5. THE CONTRACTOR SHALL SUBMIT THE STRESSING SEQUENCE AND ELONGATION CALCULATIONS TO THE ENGINEER FOR APPROVAL. ALL LOSSES DUE TO TENDON VERTICAL AND HORIZONTAL CURVATURE MUST BE INCLUDED IN ELONGATION CALCULATIONS.
   A. THE PRESTRESSING FORCE SHALL BE DISTRIBUTED WITH AN APPROXIMATELY EQUAL AMOUNT IN EACH WEB AND SHALL BE PLACED SYMMETRICALLY ABOUT THE CENTERLINE OF THE TUB.
   B. NO MORE THAN ONE-HALF OF THE PRESTRESSING FORCE IN ANY WEB MAY BE STRESSED BEFORE AN EQUAL FORCE IS STRESSED IN THE ADJACENT WEBS. AT NO TIME DURING STRESSING OPERATION WILL MORE THAN ONE-SIXTH OF THE TOTAL PRESTRESSING FORCE IS APPLIED ECCENTRICALLY ABOUT THE CENTERLINE OF BRIDGE.
6. THE MAXIMUM OUTSIDE DIAMETER OF THE DUCT SHALL BE ??? INCHES. THE AREA OF THE DUCT SHALL BE AT LEAST 2.5 TIMES THE NET AREA OF THE PRESTRESSING STEEL IN THE DUCT.
7. ALL TENDONS SHALL BE STRESSED FROM PIER ??.
8. SIDE FORMS FROM INSIDE & OUTSDIE OF THE CLOSURES & CROSSBEAM SHALL BE REMOVED PRIOR TO POST-TENSIONING.

Bridge Design Engr.	M:\STANDARDS\Girders\PT Trapezoidal Tube\SIP PT TRAPEZOIDAL TUB 1.MAN									
Supervisor					REGION NO.	STATE	FED. AID PROJ. NO.	SHEET NO.	TOTAL SHEETS	
Designed By					10	WASH.				
Checked By					JOB NUMBER					
Detailed By										
Bridge Projects Engr.										
Prelim. Plan By										
Architect/Specialist	DATE	REVISION	BY	APP'D						

Wed Oct 31 09:25:20 2007

BRIDGE AND STRUCTURES OFFICE

Washington State Department of Transportation

STANDARD PRESTRESSED CONCRETE GIRDERS

TRAPEZOIDAL TUB S-I-P DECK PANEL SPLICED GIRDER DETAILS 1 OF 5

BRIDGE SHEET NO.

SHEET OF SHEETS

SR JOB NO. SHEET

5.9-A5-1

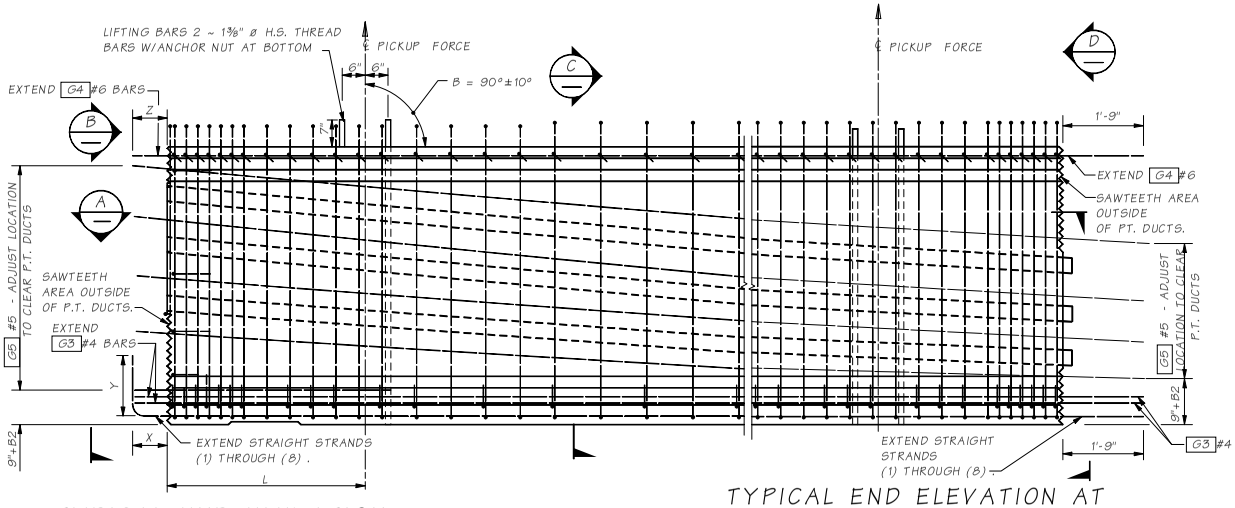

TYPICAL END ELEVATION AT END DIAPHRAGMS

TYPICAL END ELEVATION AT CLOSURE PLACEMENT

PRE-TENSIONING NOTES:

1. PLAN LENGTH SHALL BE INCREASED AS NECESSARY TO COMPENSATE FOR SHORTENING DUE TO PRESTRESS AND SHRINKAGE.
2. ALL STRAND FOR PRETENSIONING SHALL BE ??? DIAMETER LOW RELAXATION STRANDS (AASHTO M203, GRADE 270).
3. FOR END TYPES A, C AND D, CUT ALL STRANDS FLUSH WITH THE GIRDER ENDS AND PAINT WITH AN APPROVED EPOXY RESIN, EXCEPT FOR EXTENDED STRANDS AS SHOWN. FOR END TYPES B AND E CUT ALL STRANDS 1" BELOW CONCRETE SURFACE AND GROUT WITH AN APPROVED EPOXY GROUT.
4. EXTENDED STRANDS AND BARS ARE PARALLEL TO GIRDER.
5. LIFTING BARS SHALL BE 1 ⅜" DIAMETER HIGH STRENGTH THREADED BARS (AASHTO M275, GRADE 150 MINIMUM). LIFTING HARDWARE THAT CONNECTS TO THREADED BARS SHALL BE DESIGNED AND DETAILED BY THE CONTRACTOR. LIFTING FORCES ON THREAD BARS SHALL BE VERTICAL ONLY AND WITHIN 10 DEGREES OF PERPENDICULAR TO A LINE BETWEEN PICK POINTS. CONTRACTOR SHALL SUBMIT CALCULATIONS FOR APPROVAL BY THE ENGINEER IF LIFTING FORCES ARE TO BE OTHERWISE.
6. EXTRA CAUTION MUST BE EXERCISED IN HANDLING AND PLACING ALL GIRDERS. ALL GIRDERS SHALL BE CHECKED TO ENSURE THAT THEY ARE BRACED ADEQUATELY TO PREVENT TIPPING AND TO CONTROL LATERAL BENDING DURING SHIPPING.
7. THE TOP SURFACE OF THE GIRDER FLANGE SHALL BE ROUGHENED IN ACCORDANCE WITH SECTION 6-02.3(25)H.
8. FORMS FOR BEARING PAD RECESSES SHALL BE CONSTRUCTED AND FASTENED IN SUCH A MANNER AS NOT TO CAUSE DAMAGE TO THE GIRDER DURING STRAND RELEASE OPERATION.

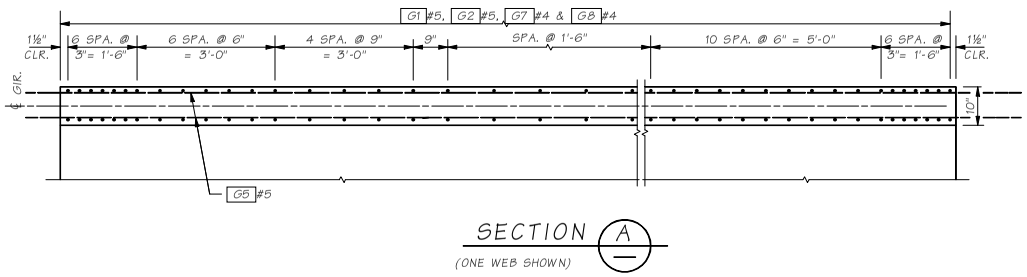

SECTION A
(ONE WEB SHOWN)

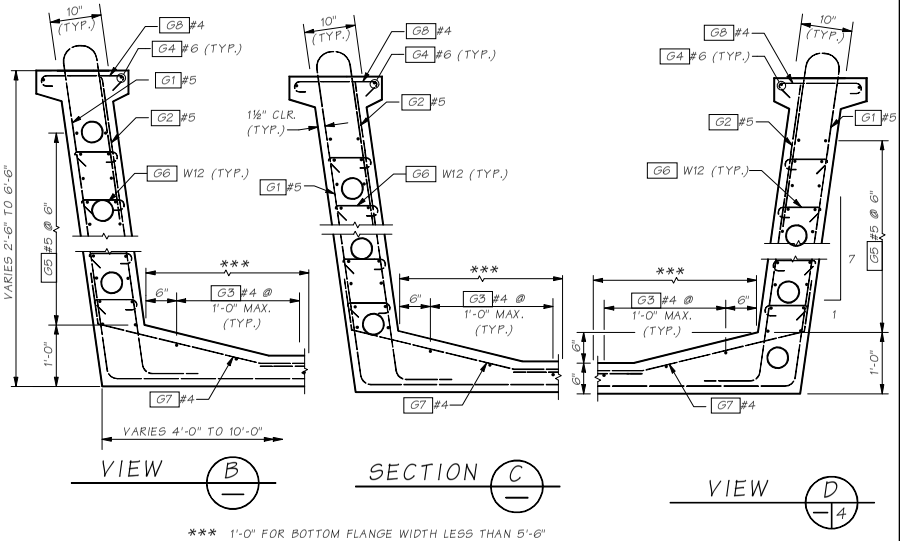

VIEW B

SECTION C

VIEW D

*** 1'-0" FOR BOTTOM FLANGE WIDTH LESS THAN 5'-6"
2'-0" FOR BOTTOM FLANGE WIDTH EQUAL OR GREATER THAN 5'-6"

Bridge Design Engr.	M:\STANDARDS\Girders\PT Trapezoidal Tubs\SIP PT TRAPEZOIDAL TUB 2.MAN				REGION NO.	STATE	FED. AID PROJ. NO.	SHEET NO.	TOTAL SHEETS	BRIDGE AND STRUCTURES OFFICE
Supervisor					10	WASH.				Washington State Department of Transportation
Designed By					JOB NUMBER					STANDARD PRESTRESSED CONCRETE GIRDERS
Checked By										
Detailed By										TRAPEZOIDAL TUB S-I-P DECK PANEL SPLICED GIRDER - DETAILS 2 OF 5
Bridge Projects Engr.										BRIDGE SHEET NO.
Prelim. Plan By										SHEET OF SHEETS
Architect/Specialist	DATE	REVISION	BY	APP'D						

SR ___ JOB NO. 5.9-A5-2 ___ SHEET

Wed Oct 31 08:25:15 2007

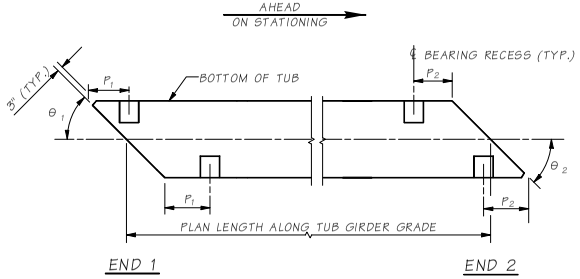

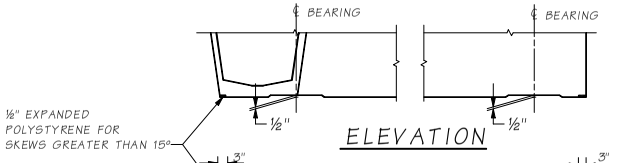

ELEVATION

PLAN

BOTTOM OF TUB SPALL PROTECTION

END TYPE "C" INTERMEDIATE HINGE DIAPHRAGM
AND END TYPE "D" INTEREMEDIATE FIXED DIAPHRAGM

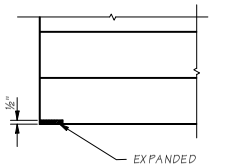

SECTION A

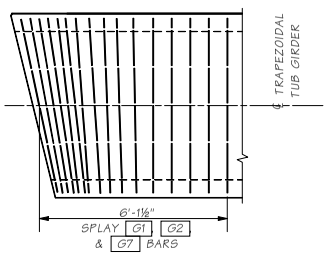

TRANSVERSE REINFORCING AT SKEWED ENDS

ONLY TRANSVERSE REINF. SHOWN

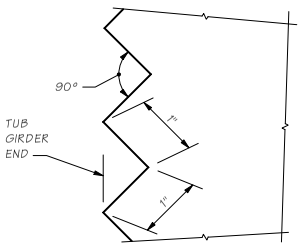

SAWTOOTH DETAILS

SAWTEETH ARE FULL WIDTH - USE SAWTEETH FULL HEIGHT ON END SECTIONS.

***THE NUMBER OF LIFTING BARS SHALL BE BASED ON 54 KIPS PER EACH 1⅜" ø BAR.

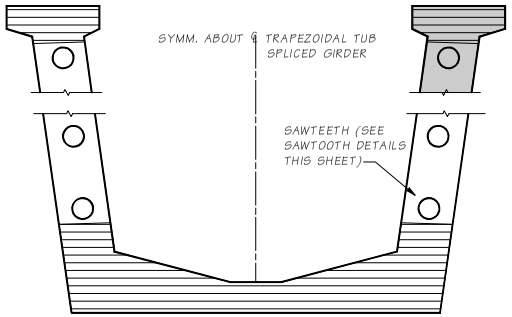

TYPICAL END ELEVATION

EXTENDED STRANDS NOT SHOWN.
USE SAWTOOTH KEYS FROM BOTTOM OF BOTTOM FLANGE TO BOTTOM OF LOWEST HARPED STRANDS.

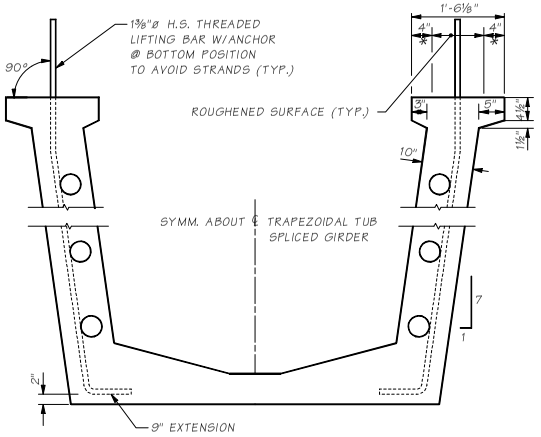

P.C. SECTION

* SMOOTH FINISH ON TOP OF GIRDER

BENDING DIAGRAM

MARK	LOCATION	SIZE	U	W	X	ALL DIMENSIONS ARE OUT TO OUT
G1	STIRRUPS, OUTSIDE WEB	5				* = VARIES FOR SKEWED SPANS
G2	STIRRUPS, INSIDE WEB	5				
G3	LONGITUDINAL BOTTOM FLANGE	4				STR.
G4	TOP WEB LONGITUDINAL	6				STR.
G5	LONGITUDINAL WEB	5				STR.
G6	WEB TIE	W12				≠ #4 MAY BE SUBSTITUTED FOR W12, FIELD BENDING IS OPTIONAL
G7	WEB	4				
G8	TOP TRANS. TIE	4				

NOTE:
FOR DIMENSION "A", SEE "GIRDER SCHEDULE"

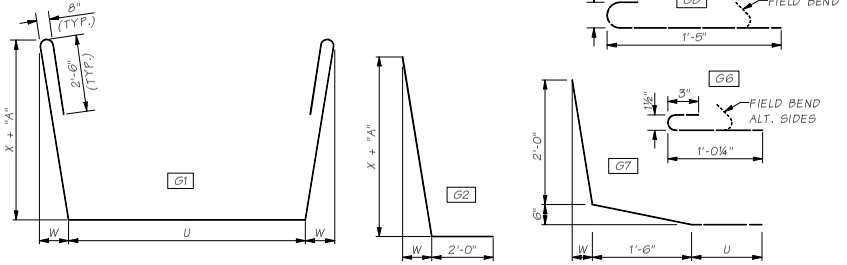

Bridge Design Engr.	M:\STANDARDS\Girders\PT Trapezoidal Tubs\SIP PT TRAPEZOIDAL TUB 3.MAN			REGION NO.	STATE	FED. AID PROJ. NO.	SHEET NO.	TOTAL SHEETS
Supervisor				10	WASH.			
Designed By				JOB NUMBER				
Checked By								
Detailed By								
Bridge Projects Engr.								
Prelim. Plan By								
Architect/Specialist	DATE	REVISION	BY	APP'D				

Wed Oct 31 09:23:10 2007

BRIDGE AND STRUCTURES OFFICE

Washington State Department of Transportation

STANDARD PRESTRESSED CONCRETE GIRDERS

TRAPEZOIDAL TUB S-I-P DECK PANEL SPLICED GIRDERS - DETAILS 3 OF 5

BRIDGE SHEET NO.

SHEET OF SHEETS

SR JOB NO. SHEET

5.9-A5-3

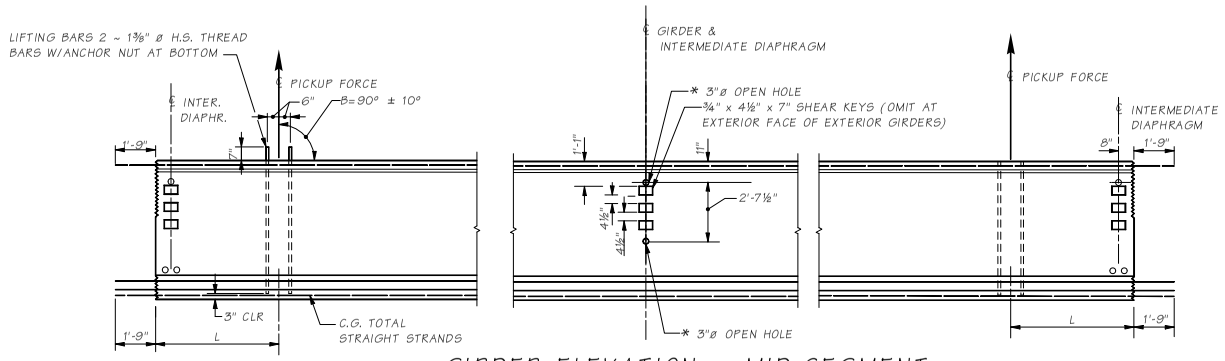

GIRDER ELEVATION ~ MID-SEGMENT

* OMIT HOLES AND PLACE INSERTS ON THE INTERIOR FACE OF EXTERIOR WEB. PLACE HOLES AND INSERTS PARALLEL TO SKEW. INSERTS SHALL BE 1" ø ROCKET/KOHLER, BURKE HI-TENSILE, LANCASTER MALLEABLE OR APPROVED EQUAL.

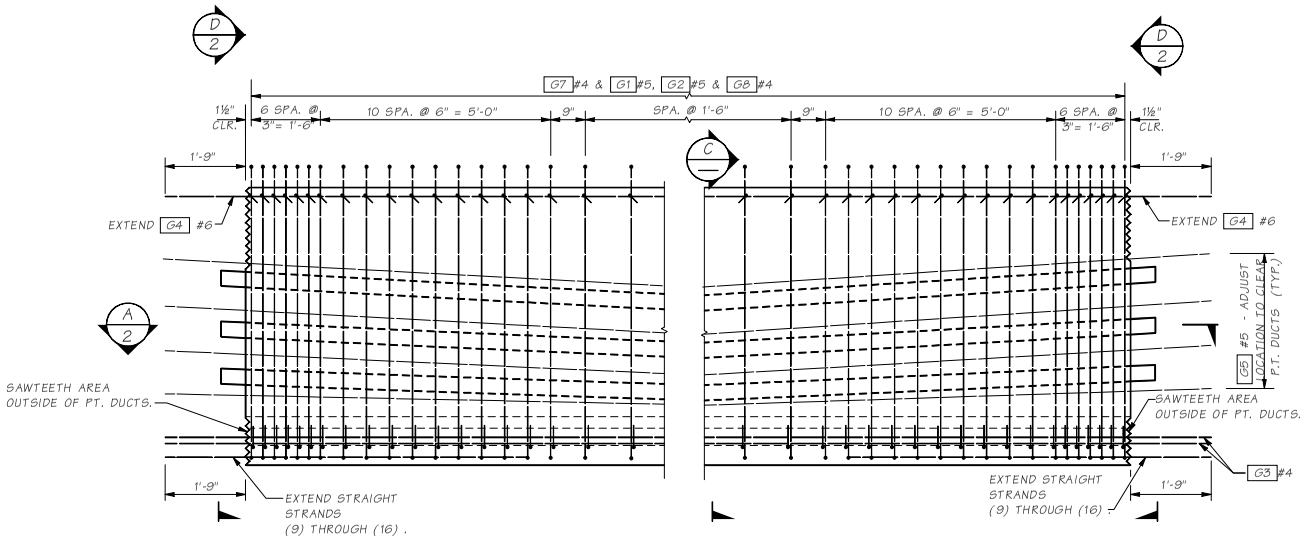

TYPICAL MID-SEGMENT ELEVATION

Bridge Design Engr.	M:\STANDARDS\Girders\PT Trapezoidal Tubs\SIP PT TRAPEZOIDAL TUB 4.MAN				REGION NO.	STATE	FED. AID PROJ. NO.	SHEET NO.	TOTAL SHEETS	BRIDGE AND STRUCTURES OFFICE
Supervisor					10	WASH.				Washington State Department of Transportation
Designed By					JOB NUMBER					STANDARD PRESTRESSED CONCRETE GIRDERS
Checked By										TRAPEZOIDAL TUB S-I-P DECK PANEL SPLICED GIRDER - DETAILS 4 OF 5
Detailed By										BRIDGE SHEET NO.
Bridge Projects Engr.										SHEET OF SHEETS
Prelim Plan By										
Architect/Specialist	DATE	REVISION	BY	APP'D						

SR 9-A5-4 JOB NO. SHEET

Wed Oct 31 09:23:06 2007

DIMENSION "A" AT ℄ BEARINGS = SEE "A" DIMENSION TABLE

SPAN	GIRDER	END SEGMENT 1													MID-SEGMENT												END SEGMENT 2											
		MINIMUM CONCRETE COMPR. STRENGTH		END 1 TYPE	END 2 TYPE	L	θ1 (DEG.)	θ2 (DEG.)	P1	PLAN LENGTH (ALONG ℄ GIRDER GRADE)	STRAIGHT		C.G. STRANDS	Ld	END 1 TYPE	END 2 TYPE	L	θ1 (DEG.)	θ2 (DEG.)	PLAN LENGTH (ALONG ℄ GIRDER GRADE)	STRAIGHT		C.G. STRANDS	Ld	END 1 TYPE	END 2 TYPE	L	θ1 (DEG.)	θ2 (DEG.)	P2	PLAN LENGTH (ALONG ℄ GIRDER GRADE)	STRAIGHT		C.G. STRANDS	Ld
		@ FINAL F'C (KSI)	@ RELEASE F'CI (KSI)								NO. OF STRANDS	JACKING FORCE (KIPS)	E									NO. OF STRANDS	JACKING FORCE (KIPS)	E										NO. OF STRANDS	JACKING FORCE (KIPS)	E	

NOTES TO DESIGNER:

1. This strand extension detail is to be used for continuous spans at moment resisting diaphragms only.This detail is not applicable to continuous spans using hinge diaphragms.
2. Designer shall calculate the exact number of extended straight strands needed to develop the required moment capacity at the end of the girder. This calculation shall be based on the tensile strength of the strands, the stresses imposed on the anchor, and concrete bearing against the projected area of the anchor.
   The total number of extended strands shall not be less than:
3. $Nps = 12(Mc + Vc \times h - M_{SIDL}) \times Nc \times \frac{K}{Ng} \quad \frac{}{(0.9\ Aps \times fps \times d)}$

where:
Mc, Vc = The lesser of Elastic or Plastic hinging moment & shear capacity of column Ft-kips, kips respectively.
h = distance from top of column to c.g. of superstructure, Ft
Nc = number of columns
Ng = number of girders
Aps = area of each extended strand, in
fps = ultimate strength of strands, ksi
d = distance from top of slab to c.g. of extended strands, in
M = Moment due to SIDL (Traffic barrier, sidewalk, etc.)
K = 0.5 for L1 = L2
0.67 for L1 = 2L2

NOTE:
Dimensions shall be shown in Imperial units to the nearest 1/8th inch.

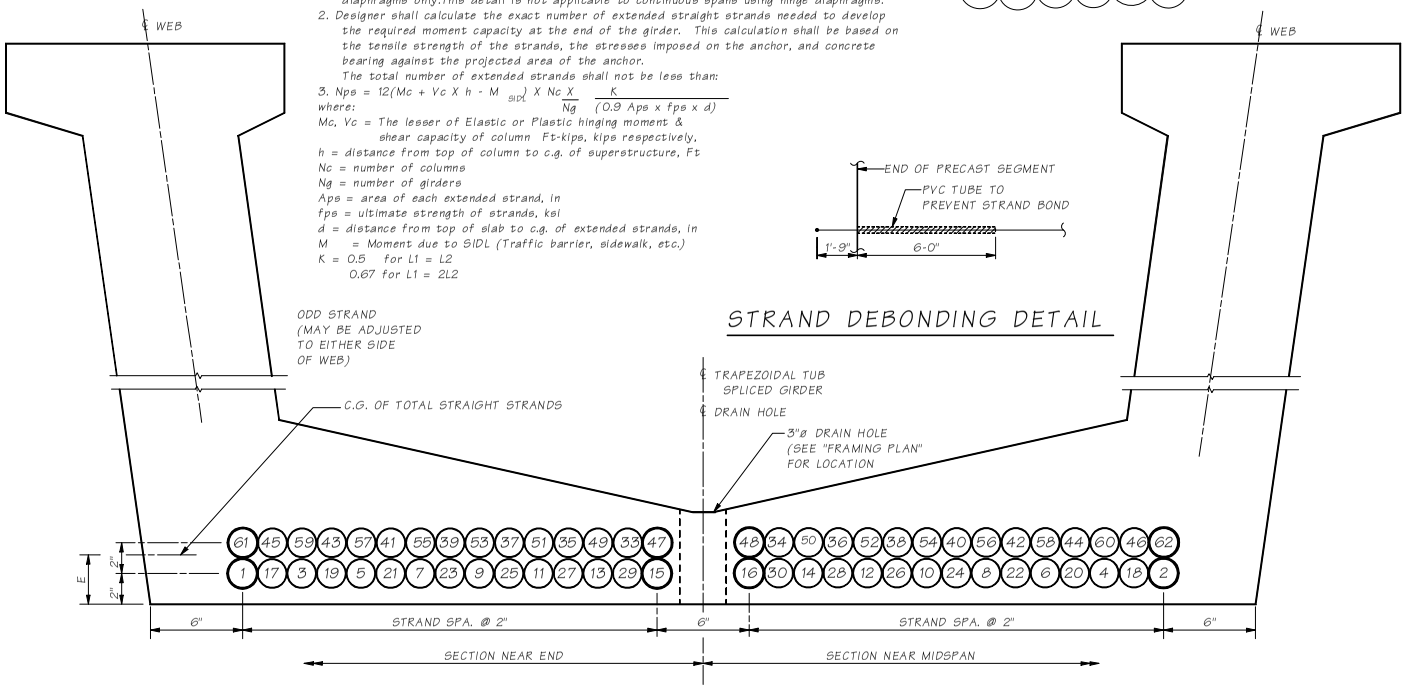

STRAND DEBONDING DETAIL

STRAND PATTERN

STRAND LOCATION SEQUENCE SHALL BE AS SHOWN (1), (2) ETC.

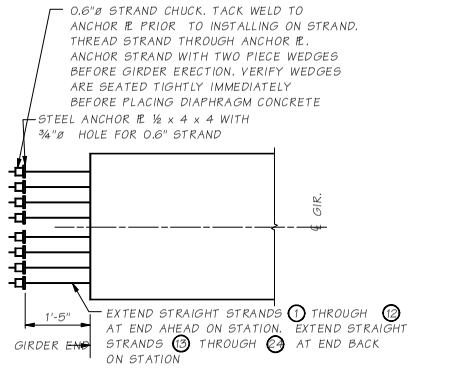

ALTERNATE # 1

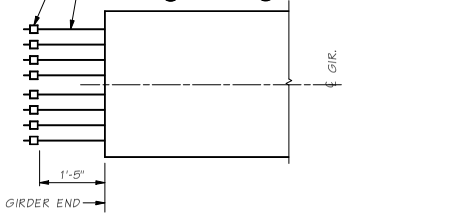

ALTERNATE # 2

STRAND EXTENSION DETAIL FOR END TYPE D

NOT ALL EXTENDED STRANDS ARE SHOWN

Bridge Design Engr.	M:\STANDARDS\Girders\PT Trapezoidal Tubs\SIP PT TRAPEZOIDAL TUB S.MAN				REGION NO.	STATE	FED. AID PROJ. NO.	SHEET NO.	TOTAL SHEETS	BRIDGE AND STRUCTURES OFFICE
Supervisor					10	WASH.				Washington State Department of Transportation
Designed By					JOB NUMBER					STANDARD PRESTRESSED CONCRETE GIRDERS
Checked By										
Detailed By										TRAPEZOIDAL TUB S-I-P DECK PANEL SPLICED GIRDER - DETAILS 5 OF 5
Bridge Projects Engr.										BRIDGE SHEET NO.
Prelim. Plan By										SHEET OF SHEETS
Architect/Specialist	DATE	REVISION	BY	APP'D						

SR JOB NO. SHEET 5.9-A5-5

Wed Oct 31 09:23:01 2007

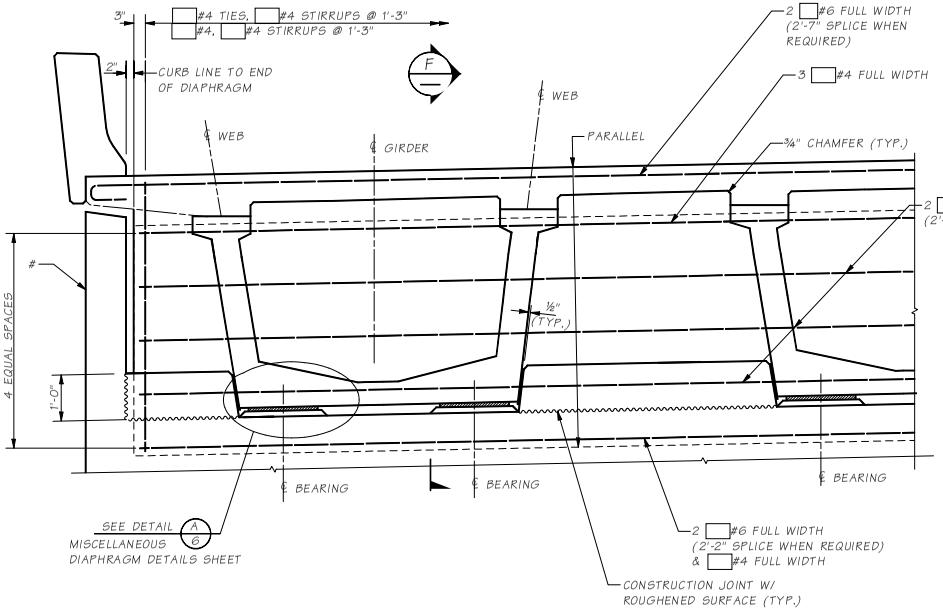

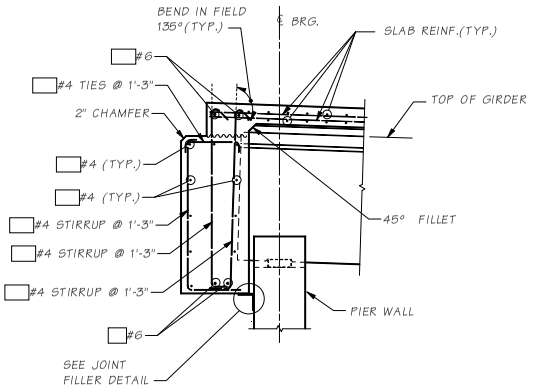

SECTION F

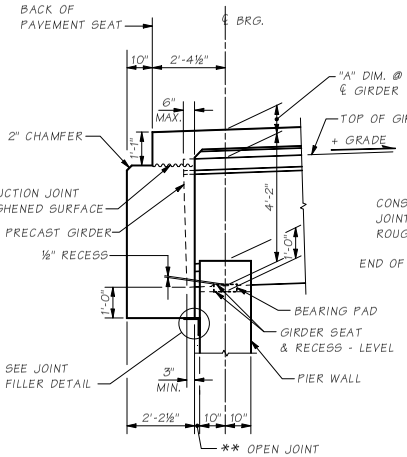

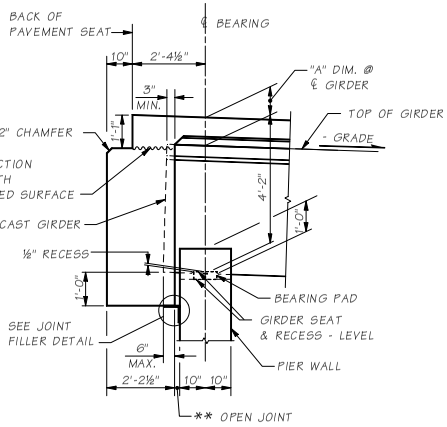

END DIAPHRAGM GEOMETRY

SECTIONS THROUGH END DIAPHRAGMS AT END PIERS
SEE "GIRDER DETAILS" SHEET FOR DIMENSION "A".
ALL LONGITUDINAL DIMENSIONS ARE NORMAL TO SKEW.

BRIDGE LENGTH	JOINT
L≤200	** = 1.5 IN.
200<L≤300	** = 2.0 IN.
300<L≤400	** = 2.5 IN.
L>400	SPECIAL DESIGN

NOTE TO DESIGNER

If ground line is less than 2'-0" minimum below the bottom of girder at front face of abutment a curtain wall shall be provided.

TYPICAL END TYPE "A" DIAPHRAGM AT END PIERS

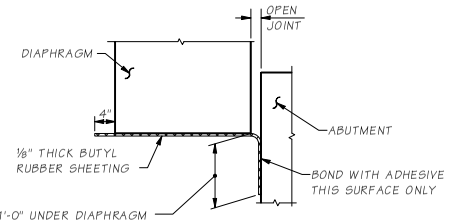

ELEVATION
BUTYL RUBBER @ DIAPHRAGM

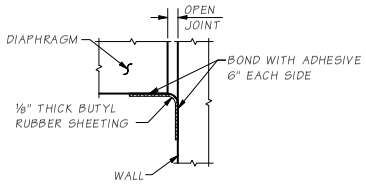

PLAN VIEW
BUTYL RUBBER @ VERTICAL JOINTS

NOTE:

1. GIRDERS SHALL BE HELD RIGIDLY IN PLACE WHEN DIAPHRAGMS ARE PLACED.
2. REINFORCING BAR SHALL BE THREADED THROUGH HOLES IN GIRDERS PRIOR TO PLACING OF EXTERIOR GIRDERS. SEE PLANS FOR "TRAFFIC BARRIER" DIMENSIONS AND LOCATION. SEE "GIRDER DETAILS" SHEET FOR DIMENSION "A".
3. END DIAPHRAGM MAY BE CAST ON GRADE. IF SO, THE UPPER LEG OF THE JOINT FILLER SHALL FORM THE BOTTOM FACE FULL WIDTH.
4. JOINT FILLER TYPE 1 SHALL BE USED TO COVER ALL VERTICAL END DIAPHRAGM JOINTS. EITHER JOINT FILLER TYPE 1 OR JOINT FILLER TYPE 2 SHALL BE USED TO COVER ALL HORIZONTAL END DIAPHRAGM JOINTS.

Bridge Design Engr.	M:\STANDARDS\Girders\PT Trapezoidal Tube\SIP PT TRAPEZOIDAL TUB END DIA ON TUB.MAN				REGION NO.	STATE	FED. AID PROJ. NO.	SHEET NO.	TOTAL SHEETS	BRIDGE AND STRUCTURES OFFICE
Supervisor					10	WASH.				Washington State Department of Transportation
Designed By					JOB NUMBER					STANDARD PRESTRESSED CONCRETE GIRDERS
Checked By										
Detailed By										TRAPEZOIDAL TUB S-I-P DECK PANEL GIRDER - END DIAPHRAGM ON GIRDER DETAILS
Bridge Projects Engr.										
Prelim. Plan By										
Architect/Specialist	DATE	REVISION	BY	APP'D						

Wed Oct 31 09:22:56 2007

SR JOB NO. SHEET 5.9-A5-6

BRIDGE SHEET NO. SHEET OF SHEETS

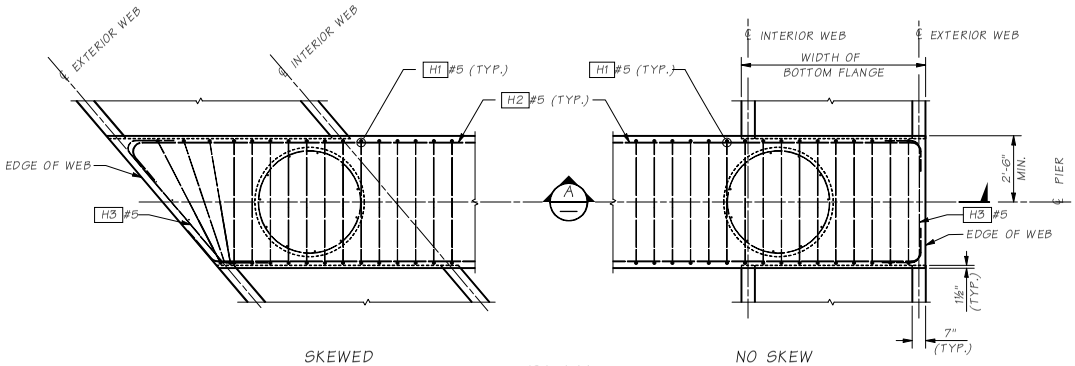

PLAN

FOR EXTENDED STRAND DETAIL SEE GIRDER SHEET 3.

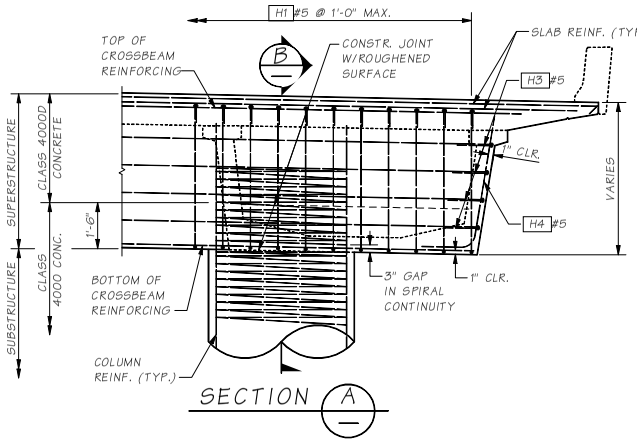

SECTION A

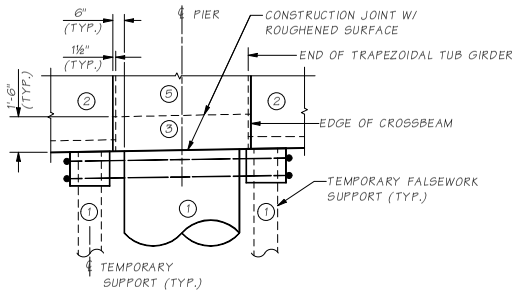

TEMPORARY SUPPORT DETAIL

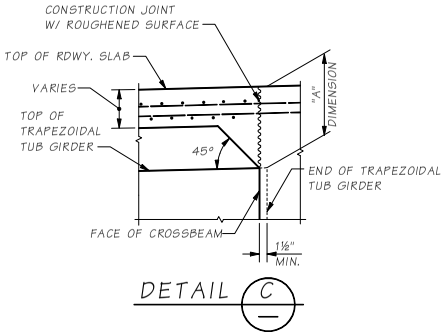

DETAIL C

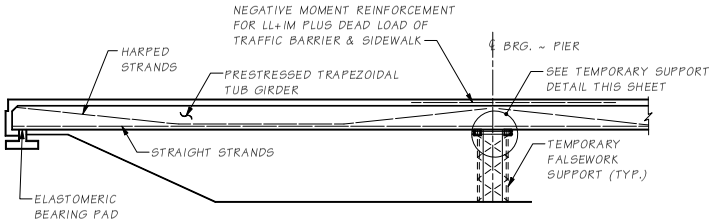

ELEVATION

CONSTRUCTION SEQUENCE

1. COLUMN & TEMP. SUPPORT
2. PLACE GIRDER ON TEMPORARY SUPPORT
3. CAST DIAPHRAGM STAGE 1
4. CAST ROADWAY SLAB
5. COMPLETE DIAPHRAGM
6. REMOVE TEMPORARY SUPPORT

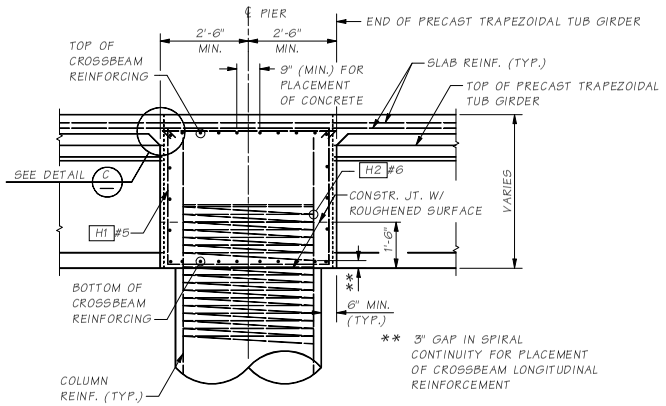

SECTION B

Bridge Design Engr.	M:\STANDARDS\Girders\PT Trapezoidal Tube\SIP PT TRAPEZOIDAL TUB RAISED CROSSBEAM.MAN				REGION NO.	STATE	FED. AID PROJ. NO.	SHEET NO.	TOTAL SHEETS
Supervisor					10	WASH.			
Designed By					JOB NUMBER				
Checked By									
Detailed By									
Bridge Projects Engr.									
Prelim. Plan By									
Architect/Specialist	DATE	REVISION	BY	APP'D					

Wed Oct 31 09:23:58 2007

BRIDGE AND STRUCTURES OFFICE

Washington State Department of Transportation

STANDARD PRESTRESSED CONCRETE GIRDERS

TRAPEZOIDAL TUB S-I-P DECK PANEL GIRDER - RAISED CROSSBEAM DETAILS

BRIDGE SHEET NO.

SHEET OF SHEETS

SR JOB NO. SHEET

5.9-A5-7

Introduction

The slab haunch is the distance between the top of a girder and the bottom of the roadway slab. The haunch varies in depth along the length of the girder accommodating the girder camber and geometric effects of the roadway surface including super elevations, vertical curves and horizontal curves.

The basic concept in determining the required "A" dimension is to provide a haunch over the girder such that the top of the girder is not less than the fillet depth (typically ¾") below the bottom of the slab at the center of the span. This provides that the actual girder camber could exceed the calculated value by 1¾" before the top of the girder would interfere with the bottom mat of slab reinforcement.

It is desirable to have points of horizontal and vertical curvature and super elevation transitions off the bridge structure as this greatly simplifies the geometric requirements on the slab haunch. However, as new bridges are squeezed into the existing infrastructure it is becoming more common to have geometric transitions on the bridge structure.

Each geometric effect is considered independently of the others. The total geometric effect is the algebraic sum of each individual effect.

Fillet Effect

The distance between the top of the girder and the top of the roadway surface, must be at least the thickness of the roadway slab plus the fillet depth.

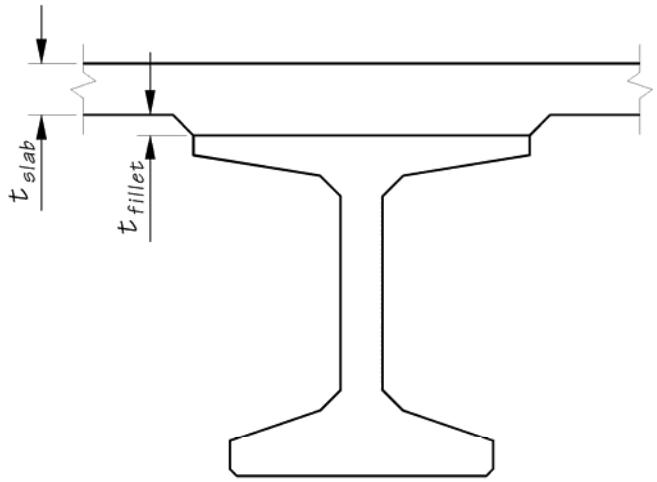

$$\Delta_{deck} = t_{slab} + t_{fillet}$$

Excessive Camber Effect

The girder haunch must be thickened to accommodate any camber that remains in the girder after slab casting. This is the difference between the "D" and "C" dimensions from the Girder Schedule Table. Use a value of 2 ½" at the preliminary design stage to determine vertical clearance.

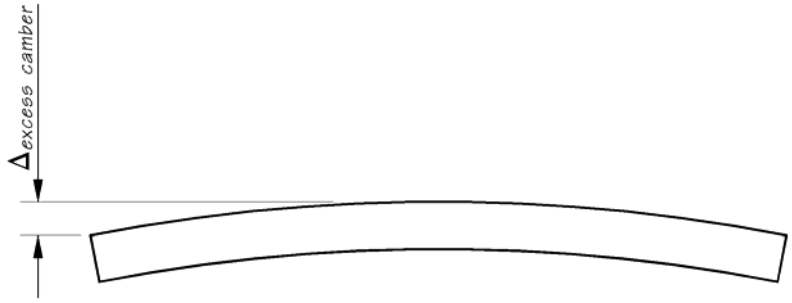

Profile Effect

The profile effect accounts for changes in the roadway profile along the length of the girder. Profile changes include grade changes, vertical curve effects, and offset deviations between the centerline of girder and the alignment caused by flared girders and/or curvature in the alignment.

When all of the girders in a span are parallel and the span is contained entirely within the limits of a vertical and/or horizontal curve, the profile effect is simply the sum of the Vertical Curve Effect and the Horizontal Curve Effect.

$$\Delta_{profile\ effect} = \Delta_{vertical\ curve\ effect} + \Delta_{horizontal\ curve\ effect}$$

The horizontal curve effect is, assuming a constant super elevation rate along the length of the span, $\Delta_{horizontal\ curve\ effect} = \frac{1.5S^2m}{R}$ where S is the length of curve in feet, R is the radius of the curve in feet, and m is the crown slope. The horizontal curve effect is in inches.

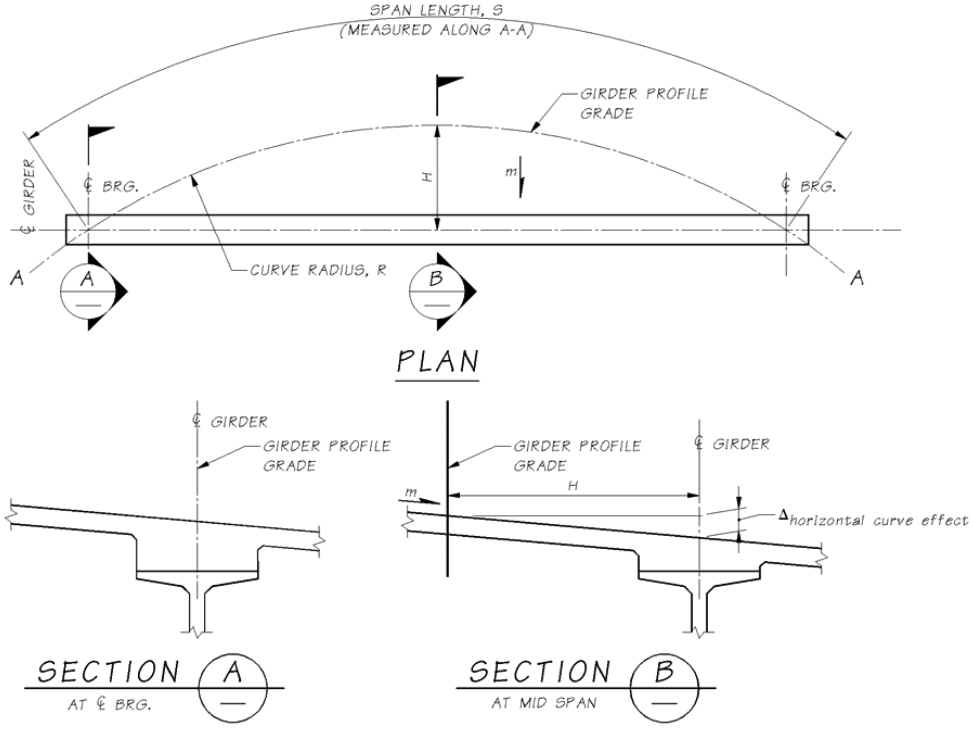

$$\Delta = \frac{S}{R}$$

$$\phi = \frac{\Delta}{4}$$

$$\phi = \frac{S}{4R}$$

$$\tan\phi \approx \phi$$

$$\tan\phi \approx \frac{2H}{S}$$

$$H = \frac{S}{2}\tan\phi \approx \frac{S}{2}\phi = \frac{S}{2}\times\frac{S}{4R} = \frac{S^2}{8R}$$

$$\Delta_{horizontal\ curve\ effect} = \frac{S^2}{8R}m\times 12\,\tfrac{in}{ft} = \frac{1.5S^2}{R}m\left(inches\right)$$

The vertical curve effect is $\Delta_{vertical\ curve\ effect} = \frac{1.5GL_g^2}{100L}$ where G is the algebraic difference in profile tangent grades ($G = g_2 - g_1$) (%), L_g is the girder length (feet), and L is the vertical curve length (feet). The vertical curve effect is in inches and is positive for sag curves and negative for crown curves.

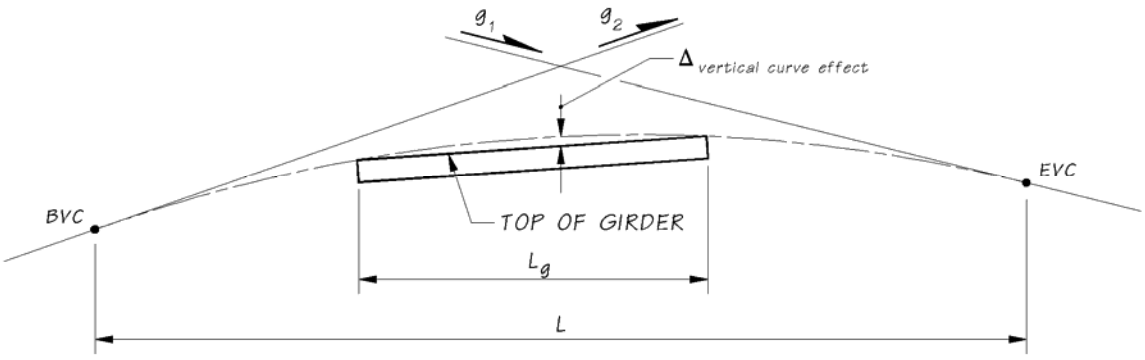

$$K = \frac{100G}{2L}$$

$$\Delta_{vertical\ curve\ effect} = K\frac{L_g^2}{40{,}000}\times 12\,\tfrac{in}{ft} = \frac{G}{2L}\times\frac{L_g^2}{400}\times 12 = \frac{1.5GL_g^2}{100L}$$

If one or more of the following roadway geometry transitions occur along the span, then a more detailed method of computation is required:

- change in the super elevation rate
- grade break
- point of horizontal curvature
- point of vertical curvature
- flared girders

The exact value of the profile effect may be determined by solving a complex optimization problem. However it is much easier and sufficiently accurate to use a numerical approach.

The figure below, while highly exaggerated, illustrates that the profile effect is the distance the girder must be placed below the profile grade so that the girder, ignoring all other geometric effects, just touches the lowest profile point between the bearings.

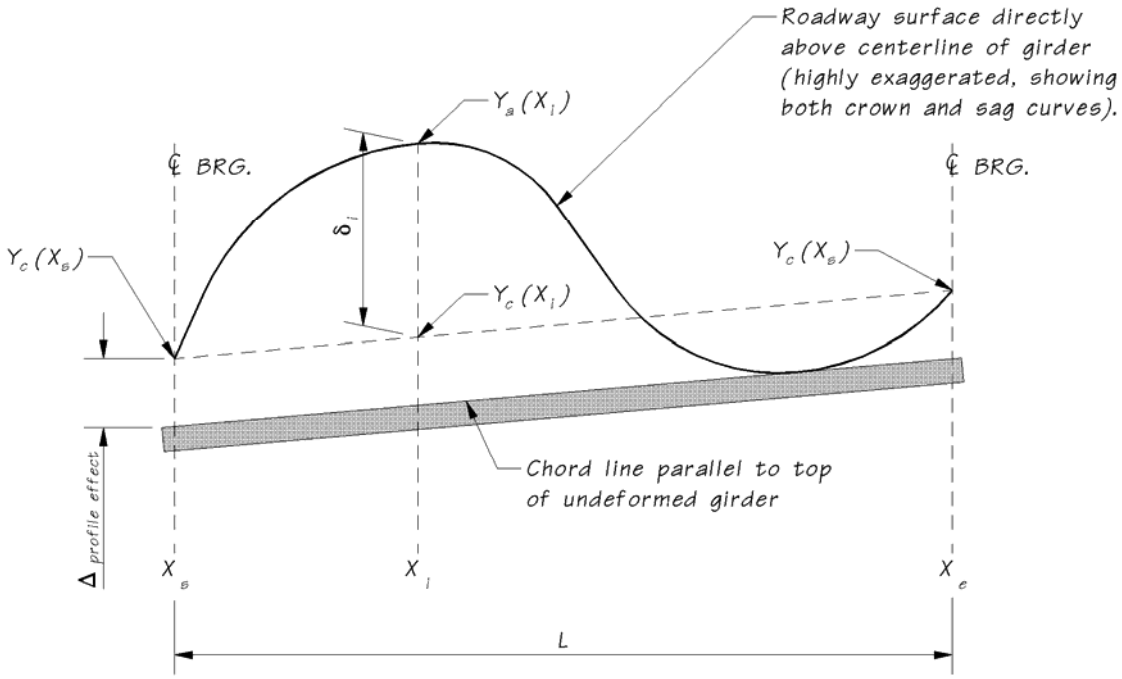

In the case of a crown curve the haunch depth may reduced. In the case of a sag curve the haunch must be thickened at the ends of the girder.

To compute the profile effect:

1. Create a chord line parallel to the top of the girder (ignoring camber) connecting the centerlines of bearing. The equation of this line is

$$y_c(x_i) = y_a(x_s, z_s) + (x_i - x_s)\left(\frac{y_a(x_e, z_e) - y_a(x_s, z_s)}{x_e - x_s}\right)$$

where

x_i = Station where the elevation of the chord line is being computed
x_s = Station at the start of the girder
x_e = Station at the end of the girder
z_s Normal offset from alignment to centerline of the girder at the start of the girder at station x_s
z_e Normal offset from the alignment to the centerline of the girder at the end of the girder at station x_e
$y_a(x_s,z_s)$ Elevation of the roadway profile at station x_s and offset z_s
$y_a(x_e,z_e)$ Elevation of the roadway profile at station x_e and offset z_e
$y_c(x_i)$ Elevation of the chord line at station x_i

2. At 10th points along the span, compute the elevation of the roadway surface directly above the centerline of the girder, $y_a(x_i,z_i)$, and the elevation of the line paralleling the top of the girder, $y_c(x_i)$. The difference in elevation is the profile effect at station x_i, $\Delta_{profile\ effect@i} = y_c(x_i)-y_a(x_i, z_i)$.

Girder Orientation Effect

The girder orientation effect accounts for the difference in slope between the roadway surface and the top of the girder. Girders such as I-beams are oriented with their Y axis plumb. Other girders such as U-beam, box beam, and slabs are oriented with their Y axis normal to the roadway surface. The orientation of the girder with respect to the roadway surface, and changes in the roadway surface along the length of the girder (super elevation transitions) define the Girder Orientation Effect.

If the super elevation rate is constant over the entire length of the span and the Y-axis of the girder is plumb, the girder orientation effect simplifies to the Top Width Effect,

$$\Delta_{girder\ orientation\ effect} = \Delta_{top\ width\ effect} = m\left(\frac{W_{top}}{2}\right).$$

If the super elevation rate varies along the span, the girder orientation effect may be computed at 10th points using this equation.

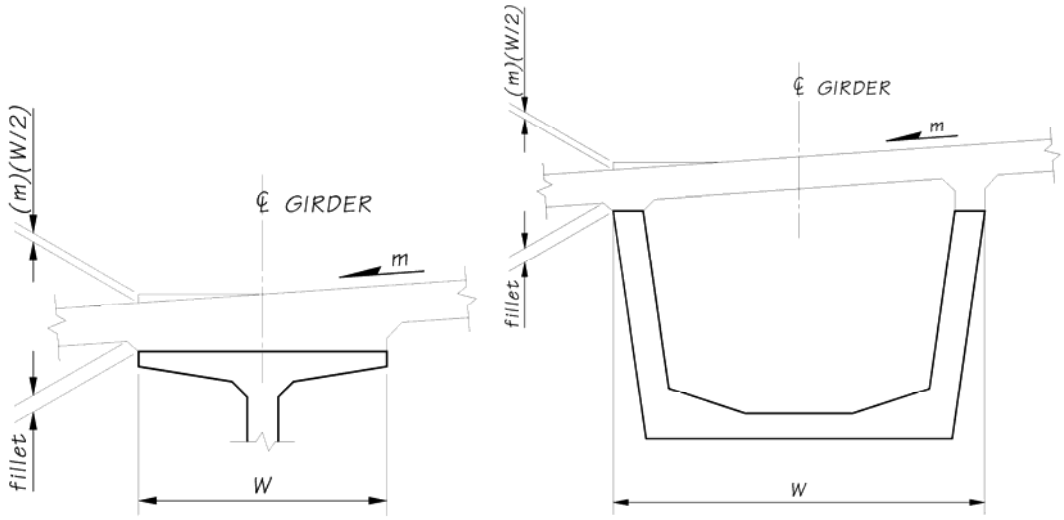

If there is a change in super elevation rate and/or the Y-axis of the girder is not plumb, then once again a more complex computation is required.

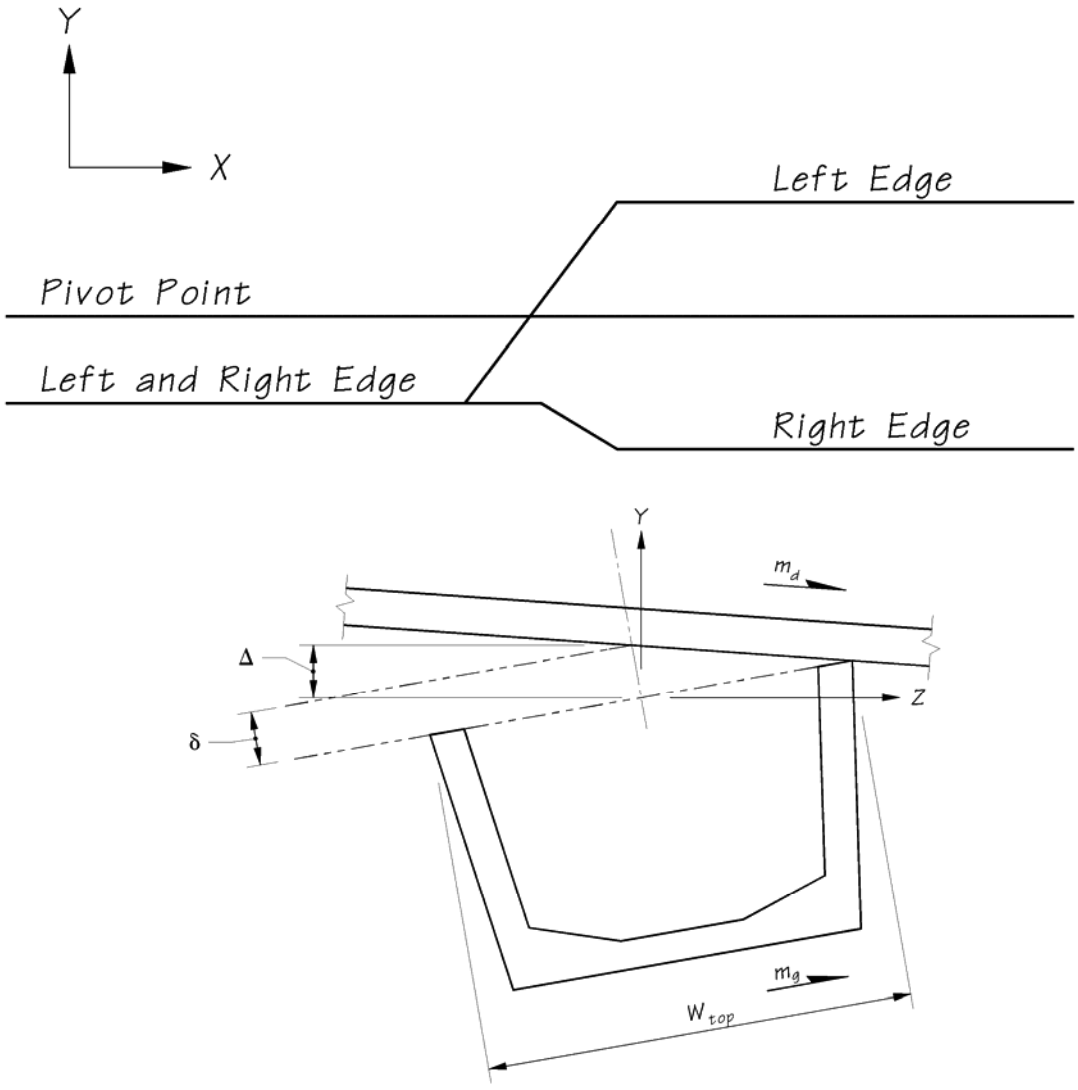

To compute the girder orientation effect at each 10th point along the girder, when the girder is not plumb:

1. Determine the cross slope, m, of the roadway surface at station x_i. If there is a crown point over the girder the cross slope is taken as

$$m(x_i, z_i) = \frac{y_a\left(x_i, z_i^{left}\right) - y_a\left(x_i, z_i^{right}\right)}{z_i^{left} - z_i^{right}}$$

where

x_i = The station where the cross slope is being computed
z_i = Normal offset from the alignment to the centerline of the girder at the end of the girder at station x_i
z_i^{left} = Offset from the alignment to the top left edge of the girder
z_i^{right} = Offset from the alignment to the top right edge of the girder
$y_a(x_i,z_i^{left})$ = Roadway surface elevation at station x_i and normal offset z_i^{left}
$y_a(x_i,z_i^{right})$ = Roadway surface elevation at station x_i and normal offset z_i^{right}

2. Determine the girder orientation effect at station $x_{i\cdot} = \frac{W_{top}}{Z}\left|\frac{m - m_g}{\sqrt{1 + m_g^2}}\right|$

"A" Dimension

The "A" dimension is the sum of all these effects.

$A = \Delta_{fillet} + \Delta_{excess\ camber} + \Delta_{profile\ effect} + \Delta_{girder\ orientation\ effect}$

If you have a complex alignment, determine the required "A" dimension for each section and use the greatest value.

Round "A" to the nearest ¼".

The minimum value of "A" is $A_{\min} = \Delta_{fillet} + \Delta_{girder\ orientation\ effect}$.

If a Drain Type 5 crosses the girder, "A" shall not be less than 9 inches.

Limitations

These computations are for a single girder line. The required haunch should be determined for each girder line in the structure. Use the greatest "A" dimension.

These computations are also limited to a single span. A different haunch may be needed for each span or each pier. For example, if there is a long span adjacent to a short span, the long span may have considerably more camber and will require a larger haunch. There is no need to have the shorter spans carry all the extra concrete needed to match the longer span haunch requirements. With the WF series girders, the volume of concrete in the haunches can add up quickly. The shorter span could have a different haunch at each end as illustrated below.

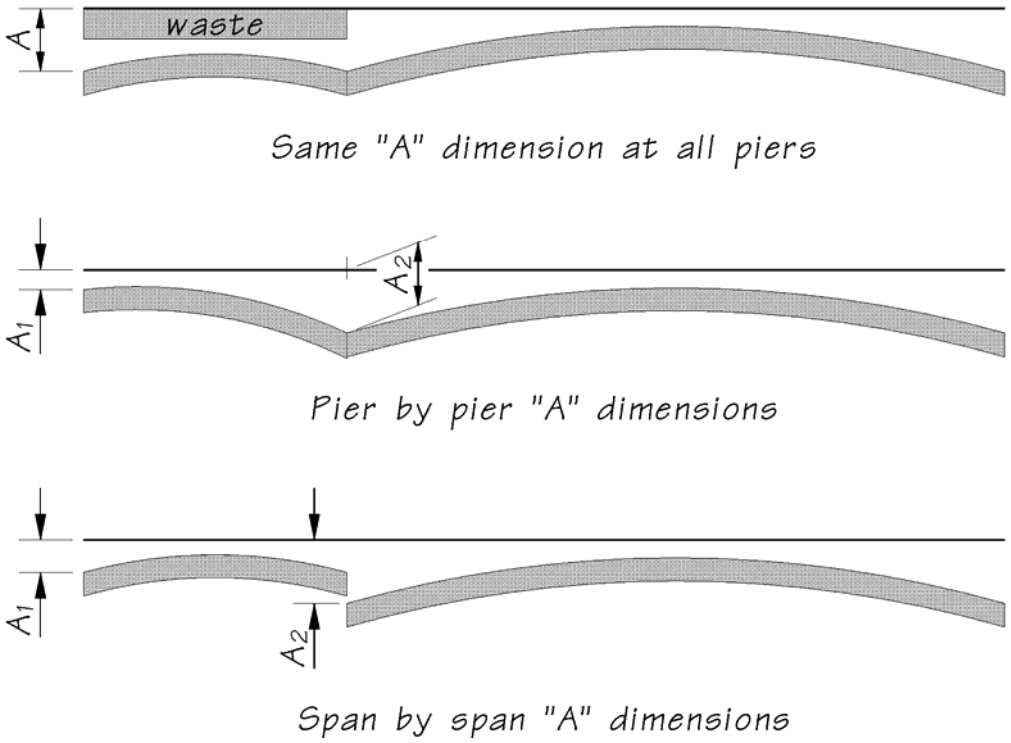

Stirrup Length and Precast Deck Leveling Bolt Considerations

For bridges on crown vertical curves, the haunch depth can become excessive to the point where the girder and diaphragm stirrups are too short to bend into the proper position. Similarly the length of leveling bolts in precast deck panels may need adjustment.

Stirrup lengths are described as a function of "A" on the standard girder sheets. For example, the G1 and G2 bars of a WF74G girder are 6'-5"+ "A" in length. For this reason, the stirrups are always long enough at the ends of the girders. Problems occur when the haunch depth increases along the length of the girder to accommodate crown vertical curves and super elevation transitions.

If the haunch depth along the girder exceeds "A" by more than 2 inches, an adjustment must be made. The haunch depth at any section can be compute as $A - \Delta_{profile\ effect} - \Delta_{excess\ camber}$.

"A" Dimension Worksheet - Simple Alignment

Fillet Effect

Slab Thickness (t_{slab}) = _____ in
Fillet Size (t_{fillet}) = _____ in
$\Delta_{fillet} = t_{slab} + t_{fillet}$ = _____ in

Excess Camber Effect

"D" Dimension from Girder Schedule (120 days) = _____ in
"C" Dimension from Girder Schedule = _____ in
$\Delta_{excess\ camber}$ = "D" - "C" = _____ in

Profile Effect

Horizontal Curve Effect, $\Delta_{horizontal\ curve\ effect} = \frac{1.5S^2m}{R}$ = _____ in

Vertical Curve Effect, $\Delta_{vertical\ curve\ effect} = \frac{1.5GL_g^2}{100L}$ = _____ in
(+ for sag, – for crown)

$\Delta profile = \Delta horizontal\ curve\ effect + \Delta vertical\ curve\ effect$ = _____ in

Girder Orientation Effect

Girder must be plumb.

$\Delta girder\ orientation$ = 0 for U-beams inclined parallel to the slab.

$\Delta girder\ orientation = \Delta top\ flange\ effect = m\left(\frac{W_{top}}{2}\right)$ = _____ in

"A" Dimension

$\Delta_{fillet} + \Delta_{excess\ camber} + \Delta_{profile\ effect} + \Delta_{girder\ orientation\ effect}$ = _____ in

Round to nearest ¼" = _____ in
Minimum "A" Dimension, $\Delta_{fillet} + \Delta_{girder\ orientation\ effect}$ = _____ in

"A" Dimension = _____ in

Example

Slab: Thickness = 7.5", Fillet = 0.75"

WF74G Girder: W_{top} = 49"

Span Length = 144.4 ft

Crown Slope = 0.04ft/ft

Camber: D = 7.55", C = 2.57"

Horizontal Curve Radius = 9500ft through centerline of bridge

Vertical Curve Data: g_1 = 2.4%, g_2 = -3.2%, L = 800ft

Fillet Effect

Slab Thickness (t_{slab})	= 7.5 in
Fillet Size (t_{fillet})	= 0.75 in
$\Delta fillet = t_{slab} + t_{fillet}$	= 8.25 in

Excess Camber Effect

"D" Dimension from Girder Schedule (120 days)	= 7.55 in
"C" Dimension from Girder Schedule	= 2.57 in
$\Delta_{excess\ camber}$ = "D" - "C"	= 4.98 in

Profile Effect

Horizontal Curve Effect,
Chord Length = 144.4ft, $C = 2R\sin\frac{\Delta}{2}$ $144.4 = 2(9500)\sin\frac{\Delta}{2}$ $\Delta = 0.87"$

Curve Length = $R\Delta\frac{\pi}{180} = 9500(0.87)\frac{\pi}{180} = 144.4\,ft$

$$\Delta_{horizontal\ curve\ effect} = \frac{1.5S^2m}{R} = \frac{1.5(144.4)^2 0.04}{9500} = 0.13in$$

Vertical Curve Effect,

$$\Delta_{vertical\ curve\ effect} = \frac{1.5GL_g^2}{100L} = \frac{1.5(-5.6)(144.4)^2}{100(800)} = -2.19in$$

(+ for sag, – for crown)

$\Delta_{profile} = \Delta_{horizontal\ curve\ effect} + \Delta_{vertical\ curve\ effect}$ = 0.13-2.19 = -2.06in

Girder Orientation Effect

$$\Delta_{girder\ orientation} = \Delta_{top\ flange\ effect} = m\left(\frac{W_{top}}{2}\right) = 0.04\frac{49}{2} = 0.98in$$

"A" Dimension

$\Delta_{fillet} + \Delta_{excess\ camber} + \Delta_{profile\ effect} + \Delta_{girder\ orientation\ effect}$ = 8.25 + 4.98 – 2.06 + 0.98 = 12.15 in
Round to nearest ¼" = 12.25 in
Minimum "A" Dimension, $\Delta_{fillet} + \Delta_{girder\ orientation\ effect}$ = 8.25 + 0.98 = 9.23 in

"A" Dimension = 12¼ in

Preapproved Post-Tensioning Anchorages

The following are the anchorages approved by the Washington State Department of Transportation. The majority of these anchorages have been approved and accepted by WSDOT on the bases of tests done by suppliers for various state and local jurisdictions outside the state of Washington.

VSL Corporation (Owned by DYWIDAG Systems International)		
Anchorage	Type	Maximum Number of Strands
E5-12	Bearing Plate	12 ½-inch strands
E5-19	Bearing Plate	19 ½-inch strands
E5-22	Bearing Plate	22 ½-inch strands
E5-31	Bearing Plate	31 ½-inch strands
E5-37	Bearing Plate	37 ½-inch strands
E6-12	Bearing Plate	12 0.6-inch strands
E6-19	Bearing Plate	19 0.6-inch strands
E6-22	Bearing Plate	22 0.6-inch strands
E6-31	Bearing Plate	22.06-inch strands
EC5-31	Casting With External and Intermediate	31 ½-inch strands
EC5-27	Casting With External and Intermediate	27 ½-inch strands
EC5-19	Casting With External and Intermediate	19 ½-inch strands
EC5-12	Casting With External and Intermediate	12 ½-inch strands
SO6-4	Casting With External Flange (for Bearing)	4 0.6-inch strands used for dock (or slab) post-tensioning
ACS-28.5	Bearing Plate	28 ½-inch strands
ACS-24.5	Bearing Plate	24 ½-inch strands
ACS-22.5	Bearing Plate	22 ½-inch strands
C-22.5	Casting With External and Intermediate	22 ½-inch strands
ES5-12	Single Plane Anchorage	12 ½-inch strands
ES5-19	Single Plane Anchorage	19 ½-inch strands
ES5-31	Single Plane Anchorage	31 ½-inch strands
ES6-7	Single Plane Anchorage	7 0.6 inch strands
ES6-12	Single Plane Anchorage	16 0.6 inch strands
ES6-19	Single Plane Anchorage	19 0.6 inch strands
ES6-22	Single Plane Anchorage	22 0.6 inch strands

AVAR Post-tensioning Systems		
Anchorage	Type	Maximum Number of Strands
SP 12.5	Single Plane System	12 ½-inch strands
SP 19.5	Single Plane System	19 ½-inch strands
SP 27.5	Single Plane System	27 ½-inch strands
SP 37.5	Single Plane System	37 ½-inch strands
MP 12.5	Multiple Plane System	12 ½-inch strands
MP 22.5	Multiple Plane System	22 ½-inch strands
MP 34.5	Multiple Plane System	34 ½-inch strands
C 12.5	Single Plane System	12 ½-inch strands
C 19.5	Single Plane System	19 ½-inch strands
C 27.5	Single Plane System	27 ½-inch strands
DYWIDAG Systems International		
Anchorage	Type	Maximum Number of Strands
MA12-0.5”	Mutiplane Anchorage	12 ½-inch strands
MA 9-.06”	Mutiplane Anchorage	9.6-inch strands
MA 15-.05”	Mutiplane Anchorage	15 ½-inch strands
MA 120-0.6”	Mutiplane Anchorage	12.6-inch strands
MA 20-.05”	Mutiplane Anchorage	20 ½-inch strands
MA 15-.6”	Mutiplane Anchorage	15.6-inch strands
MA 27-0.5”	Mutiplane Anchorage	27 ½-inch strands
MA 19-.06”	Mutiplane Anchorage	19.6-inch strands
MA 37-0.5”	Mutiplane Anchorage	37 ½-inch strands
MA 27-.06”	Mutiplane Anchorage	27.6-inch strands
MA 15-.5”	Mutiplane Anchorage	27 ½-inch strands
MA 15-.5”	Mutiplane Anchorage	27 ½-inch strands
Bar Anchorages	1-inch thread bars through $1\frac{3}{8}$ at fu of 150 ksi only.	

* Total strands include all bottom strands and top strands

** Strands are not developed fully, designer should check capacities and span lengths

The following listed bridge widenings are included as aid to the designer. These should not be construed as the only acceptable methods of widening; there is no substitute for the designer's creativity or ingenuity in solving the challenges posed by bridge widenings.

Bridge	SR	Contract No.	Type of Bridge	Unusual Features
NE 8th Street U'Xing	405	9267	Ps. Gir.	Pier replacements
Higgins Slough	536	9353	Flat Slab	
ER17 and AR17 O-Xing	5	9478	Box Girder	Middle and outside widening.
SR 538 O-Xing	5	9548	T-Beam	Unbalanced widening section support at diaphragms until completion of closure pour.
B-N O'Xing	5	9566	Box Girder	Widened with P.S. Girders, X-beams, and diaphragms not in line with existing jacking required to manipulate stresses, added enclusure walls.
Blakeslee Jct. E/W	5	9638	T-Beam and Box Girder	Post-tensioned X-beam, single web.
B-N O'Xing	18	9688	Box Girder	
SR 536		9696	T-Beam	Similar to Contract 9548.
LE Line over Yakima River	90	9806	Box Girder	Pier shaft.
SR 18 O-Xing	90	9823	P.S. Girder	Lightweight concrete.
Hamilton Road O-Xing	5	9894	T-Beam	Precast girder in one span.
Dillenbauch Creek	5		Flat Slab	
Longview Wye SR 432 U-Xing	5		P.S. Girder	Bridge lengthening.
Klickitat River Bridge	142		P.S. Girder	Bridge replacement.
Skagit River Bridge	5		Steel Truss	Rail modification.
B-N O-Xing at Chehalis	5			Replacement of thru steel girder span with stringer span.
Bellevue Access EBCD Widening and Pier 16 Modification	90	3846	Flat Slab and Box Girder	Deep, soft soil. Stradle best replacing single column.
Totem Lake/NE 124th I/C	405	3716	T-Beam	Skew = 55 degrees.
Pacific Avenue I/C	5	3087	Box Girder	Complex parallel skewed structures.
SR 705/SR 5 SB Added Lane	5	3345	Box Girder	Multiple widen structures.
Mercer Slough Bridge 90/43S		3846	CIP Conc. Flat Slab	Tapered widening of flat slab outrigger pier, combined footings.
Spring Street O-Xing No. 5/545SCD		3845	CIP Conc. Box Girder	Tapered widening of box girder with hingers, shafts.
Fishtrap Creek Bridge 546/8		3661	P.C. Units	Widening of existing P.C. Units. Tight constraints on substructure.
Columbia Drive O-Xing 395/16		3379	Steel Girder	Widening/Deck replacement using standard rolled sections.

Bridge	SR	Contract No.	Type of Bridge	Unusual Features
S 74th-72nd St. O-Xing No. 5/426		3207	CIP Haunched Con. Box Girder	Haunched P.C. P.T. Bath Tub girder sections.
Pacific Avenue O-Xing No. 5/332		3087	CIP Conc. Box Girder	Longitudinal joint between new and existing.
Tye River Bridges 2/126 and 2/127		3565	CIP Conc. Tee Beam	Stage construction with crown shift.
SR 20 and BNRR O-Xing No. 5/714		9220	CIP Conc. Tee Beam	Widened with prestressed girders raised crossbeam.
NE 8th St. U'Xing No. 405/43		9267	Prestressed Girders	Pier replacement — widening.
So. 212th St. U'Xing SR 167		3967	Prestressed Girders	Widening constructed as stand alone structure. Widening column designed as strong column for retrofit.
SE 232nd St. SR 18		5801	CIP Conc. Post-tensioned Box	Skew = 50 degree. Longitudinal "link pin" deck joint between new and existing to accommodate new creep.
Obdashian Bridge 2/275		N/A 1999	CIP Post-tensioned Box	Sidewalk widening with pipe struts.

Contract No.	Name	County	Award Date	Span	Width Curb Curb (ft.)	Span/ Depth	Skew Deg.	Remarks
8759	Kalama River Bridge SB	Cowlitz	2/70	40 200 200 40	Varies 46-53		0	6′ sidewalk on one side.
	NB		2/70	40 200 200 40	Varies 46.5	Varies	0	6′ sidewalk on one side.
8761	Valley View Road O'xing	Snohomish	2/70	88 170 88	38	25.2	0	
9102	Columbia River Bridge at Olds**	Chelan & Douglas	7/71	190 260 190	74	Varies	0	
9749	Evergreen Parkway	Thurston		100.5 145 145 114 114 87.5	26	Varies	47	Hourglass columns.
9840	W Sunset Way Ramp U'xing	King	12/74	160 159 100	26	22.9	Curved 500′R & 600′R	
1193	24F Over MD Line	Clark	8/78	129 201 129	26	Varies	0	
3794	Sen. Sam C. Guess Memorial (Division St. 2/644)		5/90	126 182 126	77	Varies	12	Replaced arch, built in two stages.

**Middle 3 spans of 7-span bridge are post-tensioned.

Contract No.	Name	County	Award Date	Span	Width Curb Curb (ft.)	Span/ Depth	Skew Deg.	Remarks
8569	Brickyard Road U'xing	King	2/69	137 155	38	22.2	45	
9122	NE 50th Avenue U'xing	Clark	7/71	124 124	44	24.8	12	
9122	NE 69th Avenue U'xing	Clark	7/71	130 130	84	23.6	0	
9289	SE 232nd Street U'xing	King	3/72	141 133	55	23.5	51	
9448	NE 18th Street U'xing	Clark	1/73	138 138	44	22.8	17	6' sidewalk on each side.
9737	Mill Plain Road I/C U'xing	Clark	5/74	167 172	84	22.2	8	5' sidewalk on each side.
0862	East Zillah I/C U'xing	Yakima	10/77	178 158	40	23.0	44	
0862	Hudson Road U'xing	Yakima	10/77	151 151	30	22.6	37	
1219	Johnson Road U'xing	Yakima & Benton	8/78	156 161	34	22.7	45	
1366	Donald Road U'xing	Yakima	12/78	142 155	55	23.8	45	
1764	148th Avenue NE U'xing	King	12/79	168 157	60	21.9	41	
1788	Gap Road U'xing	Yakima	1/80	131 131	30	22.1	37	

Contract No.	Name	County	Award Date	Span	Width Curb Curb (ft.)	Span/ Depth	Skew Deg.	Remarks
2156	14-H Line U'xing	Clark	11/81	114 114	60	22.8	0	
2156	14-D Line U'xing (North)	Clark	11/81	196 196	26	21.8	Curbed 600'R	
2217	SR 12 U'xing	Benton	2/82	147 147	55	23.3	0	
2217	Keene Road U'xing	Benton	2/82	150 150	34	21.4	Curved 11,459'R	25' counterweighted cantilever spans at each end. Transv. P.T.
2207	G Line U'xing	Benton	4/82	162.4 180.6	Varies 78.6-84.6	20.5	0	30' counterweighted cantilever spans at each end. Transv. P.T.
2207	N-S Line U'xing	Benton	4/82	155 155	38	22.1	0	
2207	SR 240 Connection U'xing (R-Line)	Benton	4/82	163.5 163.5	72	20.4	0	25' counterweighted cantilever spans at each end. Transv. P.T.
2236	Road 68 I/C U'xing	Franklin	4/82	191 191	64	23.2	35	
2236	Road 100 I/C U'xing	Franklin	4/82	183 167	55	21.5	15	
2236	SR 14 I/C U'xing (Eastbound)	Franklin	4/82	170 156	26	22.4	Curved 1600'R	
2236	SR 14 I/C U'xing (Westbound)	Franklin	4/82	159 148	38	21.8	Curved 1500'R	

Contract No.	Name	County	Award Date	Span	Width Curb Curb (ft.)	Span/ Depth	Skew Deg.	Remarks
8759	Kalama River Bridge SB	Cowlitz	2/70	40 200 200 40	Varies 46-53		0	6′ sidewalk on one side.
	NB		2/70	40 200 200 40	Varies 46.5	Varies	0	6′ sidewalk on one side.
8761	Valley View Road O'xing	Snohomish	2/70	88 170 88	38	25.2	0	
9102	Columbia River Bridge at Olds**	Chelan & Douglas	7/71	190 260 190	74	Varies	0	
9749	Evergreen Parkway	Thurston		100.5 145 145 114 114 87.5	26	Varies	47	Hourglass columns.
9840	W Sunset Way Ramp U'xing	King	12/74	160 159 100	26	22.9	Curved 500′R & 600′R	
1193	24F Over MD Line	Clark	8/78	129 201 129	26	Varies	0	
3794	Sen. Sam C. Guess Memorial (Division St. 2/644)		5/90	126 182 126	77	Varies	12	Replaced arch, built in two stages.

**Middle 3 spans of 7-span bridge are post-tensioned.

Contract No.	Name	County	Award Date	Span	Width Curb Curb (ft.)	Span/ Depth	Skew Deg.	Remarks
1439	SR 516 O'xing	King	3/79	63.5 133 63.5	42	24.2	40	
1580	Ahtanum Creek O'xing SB	Yakima	8/79	167 5@172 167	26	25.1	Curved 1200'R	
	NB		8/79	137 6@172 166	38	25.1	Curved 1200'R	
1950	Yakima River Bridges North Bridge	Benton	10/80	140+ 161 161 215 147	Varies 48'-100'	Varies	Curved 6000'R	Transverse post-tentioning.
	South Bridge			140+ 161 161 215 147	38	Varies	Curved 5900'R	Transverse post-tensioning. 10' bicycle and pedestrian path on one side.
2156	14-I Line	Clark	11/81	163 145 82	38	22.2	Curved 600'R	
2156	14 D Line (South)	Clark	11/81	128 171 128	26	24.4	Curved 625'R	
2207	GE Line Over G Line	Benton	4/82	90 188 90	38	23.5	Curved 1400'R	

Contract No.	Name	County	Award Date	Span	Width Curb Curb (ft.)	Span/ Depth	Skew Deg.	Remarks
2207	RA Line Over ER Line	Benton	4/82	47 104 47	55	17.3	20	Transverse post-tentioning.
2245	Pearl Street O'xing	Pierce	4/82	49 159 49	54	22.7	Curved 1400'R	
2245	6th Avenue O'xing	Pierce	4/82	43 125 43	Varies 87.4-102	22.7	Curved 1400'R & 400'R	
2327	Spokane River Bridge Stage 1	Spokane	6/82	175 255 175	76	Varies	0	Transverse post-tentioning.
***	Green River Bridge	King		118 150 99	74	Varies	22	
3794	Sen. Sam C. Guess Memorial (Division St. 2/644)		5/90	126 182 126	77	Varies (depth 5.5 to 8.5 at piers)	12	Replaced arch, built in two stages.

***Not yet to contract.

Appendix 5-B5 Prestressed Girder Design Example

References

1. WSDOT BDM M23-50, Jul 05
2. WSDOT Bridge Office Design Memorandums through Jun 06
3. AASHTO LRFD Bridge Design Specifications with Interim Revisions through 2006
4. PCI Design Handbook, 5th Ed
5. PG Super Theoretical Manual
6. PCI Journal, Jul-Aug 1998, New Deep WSDOT Standard Sections Extend Spans of Prestressed Concrete Girder Bridges

Design Outline

(double-click hyperlink to go to sections)

1. Material Properties
2. Structure Definition
3. Live Load Definition
4. Computation of Section Properties
5. Limit States
6. Live Load Force Effects
7. Computation of Midspan Stresses
8. Prestressing Forces and Stress Limits
9. Stresses at Service Limit State
10. Stresses at Transfer
11. Strength Limit State
12. Limit for Reinforcement
13. Shear & Longitudinal Reinf Design
14. Lifting, Shipping, and General Stability
15. Deflection and Camber
16. Minimum Strand Spacing

List of "NG" Checks

1. Material Properties

1.1 Concrete - prestressed girder

Minimum compressive strength at release $f'_{ci} := 7.5 \cdot ksi$ BDM 5.1.1 A.2

Nominal 28-day compressive strength $f'_c := 8.5 \cdot ksi$

Unit weight of concrete (for dead load) $w_c := 0.160kcf$ BDM 3.1.1; WSDOT Design Memo 4/18/00

Unit weight of concrete for elastic modulus $w_{cE} := 0.155kcf$ BDM 5.1.1 D

Concrete modulus of elasticity

$$E_c := \begin{cases} 33000 \cdot \left(\frac{w_{cE}}{kcf}\right)^{1.5} \cdot \sqrt{\frac{f'_c}{ksi}} \cdot ksi & \text{if } f'_c < 10ksi \\ 33000 \cdot \left(\frac{w_{cE}}{kcf}\right)^{1.5} \cdot \sqrt{\frac{10ksi}{ksi}} \cdot ksi & \text{otherwise} \end{cases}$$

BDM 5.1.1 D

$E_c = 5871\,ksi$

Concrete modulus of elasticity at transfer $E_{ci} := 33000 \cdot \left(\frac{w_{cE}}{kcf}\right)^{1.5} \cdot \sqrt{\frac{f'_{ci}}{ksi}} \cdot ksi$ $E_{ci} = 5515\,ksi$

Concrete modulus of rupture for flexure $f_r := 0.24 \cdot \sqrt{f'_c \div ksi} \cdot ksi$ LRFD 5.4.2.6 $f_r = 0.7\,ksi$

Concrete modulus of rupture to calculate minimum reinforcement $f_{r.Mcr.min} := 0.37 \cdot \sqrt{f'_c \div ksi} \cdot ksi$ $f_{r.Mcr.min} = 1.1\,ksi$

1.2 Concrete - slab

Nominal 28-day compressive strength $f'_{cs} := 4 \cdot ksi$ BDM 5.1.1 B

1.3 Reinforcing steel - deformed bars

Yield strength $f_y := 60 \cdot ksi$ BDM 5.1.2; LRFD 5.4.3.2

Elastic modulus $E_s := 29000 \cdot ksi$

1.4 Prestressing Steel - AASHTO M-203, uncoated, 7 wire, low-relaxation strands

Tensile strength $f_{pu} := 270 \cdot ksi$ BDM 5.1.3; LRFD 5.4.4.1

Yield strength $f_{py} := 0.90 \cdot f_{pu}$ $f_{py} = 243.0\,ksi$

Strand modulus of elasticity $E_p := 28500 \cdot ksi$

Nominal strand diameter $d_b := 0.6 \cdot in$ BDM 5.1.3 - only 0.5 in. or 0.6 in. for strands

Area of wire strand

$$A_p := \begin{cases} 0.153in^2 & \text{if } d_b = 0.5in \\ 0.217in^2 & \text{if } d_b = 0.6in \end{cases}$$

$A_p = 0.2\,in^2$

2. Structure Definition

Note: Design as simple span

2.1 Bridge Geometry

Select "interior" or "exterior" girder	girder := "interior"		girder = "interior"
Bridge width (inside curb to inside curb)	$BW := 38 \cdot ft$		
Girder spacing	$S := 6.5 \cdot ft$	BDM 5.6.4 B	
Number of girder lines	$N_b := 6$		
Skew angle (for girders round to 5 deg)	$\theta_{sk} := 30 \cdot deg$	BDM 5.6.4 D.2	
Design span, CL bearing to CL bearing	$L := 130ft$	BDM 5-A	
Girder length (see BDM end diaphragm geometry)	$GL := 133ft$	BDM 5-A	
Distance from end of girder to CL bearing (see girder schedule)	$P2 := 1ft + 3in$		$P2 = 15.0\,in$
Curb width on deck (see Standard Plans)	$cw := 10.5 \cdot in$		
Deck overhang (from CL of exterior girder to end of deck)	$overhang := \frac{BW - (N_b - 1) \cdot S}{2} + cw$		$overhang = 3.6\,ft$

2.2 Concrete Deck Slab

Slab depth for design	$t_s := 7. \cdot in$	BDM 5.2.2-A	
Depth of wearing surface	$t_{wear} := 0.5in$		
Slab depth for weight	$t_{s2} := t_s + t_{wear}$		$t_{s2} = 7.5\,in$

2.3 Prestressing

Number of harping strands	$N_h := 18$		
Number of straight strands	$N_s := 28$		
Number of temporary strands	$N_t := 6$		
Harping location from CL of bridge	$x_h := 0.4 \cdot GL - P2$	BDM 5-A	$x_h = 52.0\,ft$

2.4 Site Data

Corrosion conditions "normal" or "severe"	corrosion := "normal"	corrosion = "normal"
Average annual relative humidity	$H := 75\%$	

3. Live Load Definition

Note: HL-93 (Design truck or tandem with lane load - LRFD 3.6.1.2.1)

3.1 Design truck/tandem

HS20 heavy axle weight $HS20_{axle} := 32kip$ LRFD 3.6.1.2.2

Choose HS-type design truck (HS25, HS30, etc...) $Truck := "HS20"$ $Truck = "HS20"$

Design truck axle weight $axle := \frac{str2num(substr(Truck, 2, 2))}{20} \cdot HS20_{axle}$ $axle = 32.0\,kip$

Axle base width $axlewidth := 6ft$

Spacing between axles on design truck (min) $axle_{truck} := 14ft$ max spacing = 30 ft

Weight of each axle in Tandem set $Tandem := 25kip$ LRFD 3.6.1.2.3

Spacing between tandem axles $axle_{tand} := 4ft$

3.2 Lane load

Design lane load (no dynamic load allowance) $w_{lane} := 0.64 \cdot kip \div ft$ LRFD 3.6.1.2.4

No. of design lanes

$$N_L := \begin{cases} floor\left(\frac{BW}{12 \cdot ft}\right) & \text{if } BW > 24 \cdot ft \\ 2 & \text{if } 24 \cdot ft \geq BW \geq 20 \cdot ft \\ 1 & \text{otherwise} \end{cases}$$

$N_L = 3$ BDM 3.6.1.1.1

4. Computation of Section Properties

Stiffness Assumptions:

- Dead loads to non-composite section.
- Live load and superimposed DL (SIDL) to composite section.

4.1 Girder Properties

(collapsible region containing BDM Tables 5-70, 5-76 & Stirrups)

BDM 5.6.1

Washington standard girder	girdertype := "WF74G"	girdertype = "WF74G"
Row in BDM Table 5-70 for this girder	$row := \left(match(girdertype, data)_1\right)_1$	row = 8
Girder depth	$d_g := data_{row,2}\,in$	$d_g = 74.0\,in$
Girder cross-section area	$A_g := data_{row,3}\,in^2$	$A_g = 924.5\,in^2$
Girder moment of inertia (strong-axis)	$I_g := data_{row,4}\,in^4$	$I_g = 735675\,in^4$
Girder c.g. from girder bottom	$Y_{bg} := data_{row,5}\,in$	$Y_{bg} = 35.6\,in$
Girder Weight	$wt := data_{row,6}\,kip \div ft$	$wt = 1.0\,kip \div ft$
Girder spacing	$S_{girder} := data_{row,7}\,ft$	$S_{girder} = 6.0\,ft$
Max span capability	$span_{max} := data_{row,8}\,ft$	$span_{max} = 175.0\,ft$
check span limit	$chk_{4,1} := if\left(span_{max} > L, "OK", "NG"\right)$	$chk_{4,1} = "OK"$
Girder web width	$b_w := data_{row,10}\,in$	$b_w = 6.1\,in$
Girder top flange width	$b_f := data_{row,11}\,in$	$b_f = 73.5\,in$
Girder top flange average thickness	$t_f := data_{row,12}\,in$	$t_f = 4.5\,in$
Girder bottom flange width	$b_{f.bot} := data_{row,13}\,in$	$b_{f.bot} = 38.4\,in$
Girder bottom flange average thickness	$t_{f.bot} := data_{row,14}\,in$	$t_{f.bot} = 7.4\,in$

Standard Shear (transverse) reinforcement (BDM 5-A Girder Details - Typical End Elevation)

Vertical stirrup bar size	$bar_v := 5$
End spacing (s1)	$s1_v := 1.5in$
Length of end spacing (s1)	$l1_v := 1.5in$
Next spacing (s2)	$s2_v := 3in$
Length of spacing (s2)	$l2_v := 1.5ft$

Next spacing (s3) $s3_v := 4.5in$

Length of end spacing (s3) $l3_v := 9ft$

Next spacing (s4) $s4_v := 12in$

Length of spacing (s4) $l4_v := GL - (l1_v + l2_v + l3_v)$ $l4_v = 122.4\,ft$

Next spacing (s5) $s5_v := 12in$

Calculated section properties

Girder c.g. to girder top $Y_{tg} := d_g - Y_{bg}$ $Y_{tg} = 38.4\,in$

Section modulus to top of girder $S_{tg} := I_g \div Y_{tg}$ $S_{tg} = 19168\,in^3$

Section modulus to bottom of girder $S_{bg} := I_g \div Y_{bg}$ $S_{bg} = 20653\,in^3$

4.2 "A" Dimension (top of slab to top of girder) for Preliminary Design

Estimated "A" dimension $A := 10.75 \cdot in$ BDM App 5-B-1

Calculated "A" dimension $A_{calc} := Ceil\left(t_{s2} + \frac{3}{4}in + \frac{b_f}{2} \cdot .02 + 2.5in, \frac{1}{4}in\right)$ $A_{calc} = 11.5\,in$

4.3 Check minimum slab thickness

Minimum slab thickness (based on S) $t_{s.min} := 7.5in$ BDM Table 5-76

check slab thickness limit $chk_{4,2} := if(t_{s2} \geq t_{s.min}, "OK", "NG")$ $chk_{4,2} = "OK"$

4.4 Check span-to-depth ratio (optional criteria)

Minimum depth (for continuous prestressed girder, including deck) $depth_{min} := 0.04 \cdot GL$ LRFD 2.5.2.6.3 $depth_{min} = 63.8\,in$

check min depth $chk_{4,3} := if(depth_{min} < d_g + t_s, "OK", "NG")$ $chk_{4,3} = "OK"$

4.5 Composite Section Properties (LRFD 4.6.2.6)

Effective span (for simple span) $L_e := L$ LRFD 4.6.2.6.1 $L_e = 130.0\,ft$

Effective flange width

Temporary variable $tem := \max(b_w, 0.5b_f)$ $tem = 36.8\,in$

Effective flange width for interior girder $b_i := \min(0.25L_e, 12 \cdot t_s + tem, S)$ $b_i = 6.5\,ft$

Effective flange width for exterior girder $b_{ex} := 0.5 \cdot b_i + \min(0.125L_e, 6 \cdot t_s + 0.5 \cdot tem, overhang)$ $b_{ex} = 6.91$

Effective flange width $b_e := \begin{cases} b_i & \text{if girder} = "interior" \\ b_{ex} & \text{if girder} = "exterior" \end{cases}$ $b_e = 6.5\,ft$

Transformed Slab Properties

Modular ratio	$n := \sqrt{f'_c \div f'_{cs}}$	$n = 1.5$
Slab transformed flange width	$b_{e.trans} := b_e \div n$	$b_{e.trans} = 4.5\,ft$
Slab moment of inertia (transformed)	$I_{slab} := b_{e.trans} \cdot t_s^{\,3} \div 12$	$I_{slab} = 1529.4\,in^4$
Area of slab (transformed)	$A_{slab} := b_{e.trans} \cdot t_s$	$A_{slab} = 2.6\,ft^2$
c.g. of slab to bottom of girder	$Y_{bs} := d_g + 0.5 \cdot t_s$	$Y_{bs} = 77.5\,in$

Composite Section

c.g. to bottom of girder	$Y_b := \dfrac{A_{slab} \cdot Y_{bs} + A_g \cdot Y_{bg}}{A_{slab} + A_g}$	$Y_b = 47.7\,in$
c.g. to top of girder	$Y_t := d_g - Y_b$	$Y_t = 26.31\,in$
c.g. to top of slab	$Y_{ts} := t_s + Y_t$	$Y_{ts} = 33.31\,in$
Slab moment of inertia	$I_{slabc} := A_{slab} \cdot \left(Y_{ts} - 0.5t_s\right)^2 + I_{slab}$	$I_{slabc} = 334266\,in^4$
Girder moment of inertia	$I_{gc} := A_g \cdot \left(Y_b - Y_{bg}\right)^2 + I_g$	$I_{gc} = 870473\,in^4$
Composite section moment of inertia	$I_c := I_{slabc} + I_{gc}$	$I_c = 1204739\,in^4$
Section modulus to bottom of girder	$S_b := I_c \div Y_b$	$S_b = 25259\,in^3$
Section modulus to top of girder	$S_t := I_c \div Y_t$	$S_t = 45798\,in^3$
Section modulous to top of slab (modified due to modular ratio to get stress for correct slab effective width)	$S_{ts} := \dfrac{I_c}{Y_{ts}}\left(\dfrac{n \cdot b_e}{b_e}\right)$	$S_{ts} = 52730\,in^3$

5. Limit States

5.1 Service Limit States

Limit states relating to stress, deformation, and crack width under regular service conditions.

Service I - Load combination relating to the normal operational use of the bridge. Compression in prestressed components is investigated using this load combination.

1.0 DC + 1.0 (LL+IM)

Service III - Load combination relating only to tension in prestressed concrete structures with the objective of crack control.

1.0 DC + 0.8 (LL+IM)

Notes:
1. Force effects due to temperature, shrinkage and creep, because of the free movement at end piers, are considered to be zero.
2. Force effects due to temperature gradient, wind, friction at bearings, and settlement are ignored.

5.2 Load and Resistance Factors and Combinations

Load Combinations (LRFD 3.4.1)

- Strength I load combination - normal vehicular load without wind
- The force effects due to temperature shrinkage and creep are ignored.

Resistance factors (LRFD 5.5.4.2.1)

Flexure and tension of prestressed concrete $\phi_f := 1.0$

Flexure and tension of prestressed members - transition region (BDM 5.2.9-C.3.) $\phi_{p.t}(d_t, c) := 0.583 + 0.025 \cdot \left(\frac{d_t}{c} - 1\right)$ $\phi_{p.t}(20in, 1in) = 1.$

Flexure and tension of prestressed concrete $\phi_p(d_t, c) := \max\left(\min\left(\phi_{p.t}(d_t, c), 1.0\right), 0.75\right)$ $\phi_p(20in, 1in) = 1.0$

Shear and torsion of normal weight concrete $\phi_v := 0.90$

Axial compression with spirals or ties $\phi_c := 0.75$

Load Factors

Dead load - structure and attachments $\gamma_p := 1.25$ LRFD Table 3.4.1-1

Live load $\gamma_L := 1.75$

Load Modifier

Component and connection ductility $\eta_D := 1.00$ LRFD 1.3.3

Member redundancy $\eta_R := 1.00$ LRFD 1.3.4

Operational importance $\eta_I := 1.00$ LRFD 1.3.5

Load modifier $\eta := \max\left(\eta_D \cdot \eta_R \cdot \eta_I, 0.95\right)$ LRFD 1.3.2 $\eta = 1.0$

6. Live Load Force Effects (LRFD 3.6.1.2.2)

6.1 Shear and Bending Moment due to AASHTO Design truck

Bending moment at midspan

- under the **center** heavy axle (32 kip for HS20)
- take moments about max location on half with other heavy axle
- conservatively assumes max moment occurs @ CL span

Specified HS-truck type

$Truck = "HS20"$

c.g. of truck from the light (front) axle

$$d_{cg} := \frac{axle \cdot axle_{truck} + axle \cdot 2 \cdot axle_{truck}}{2 \cdot (axle) + axle \div 4} \qquad d_{cg} = 18.7\,ft$$

Distance from bridge midspan to c.g. of truck axles

$$e_{cg} := \left(d_{cg} - 14 \cdot ft\right) \div 2 \qquad e_{cg} = 2.3\,ft$$

Reaction at right support

$$R_r(l) := \frac{1}{l}\left(2 \cdot axle + \frac{axle}{4}\right) \cdot \left(\frac{l}{2} + e_{cg}\right) \qquad R_r(L) = 37.3\,kip$$

Bending moment under center heavy axle (peak location), per loaded lane

$$M_{truck}(l) := R_r(l) \cdot \left(\frac{l}{2} + e_{cg}\right) - axle \cdot axle_{truck}$$

$$M_{truck}(L) = 2063\,kip \cdot ft$$

Shear

- at d from interior face of support
- place live load vehicle with heavy axle at d from support
- place live load vehcile with light axle at d from support

Estimate of E for all PS

$E_{est} := 3in$ $\qquad E_{est} = 3.0\,in$

Estimate of d.p for shear calc $d_{est} := d_g - E_{est}$ $d_{est} = 71.0\,in$

LL with front axle at d from spt $V_1 := \left[axle \cdot \left(2.25L - 2.25d_{est} - 3axle_{truck}\right)\right] \div L$ $V_1 = 58.4\,kip$

LL with center axle at d from spt $V_2 := \left[axle \cdot \left(2L - 2d_{est} - axle_{truck}\right)\right] \div L$ $V_2 = 57.6\,kip$

Shear due to design truck at critical section $V_{truck} := \max(V)$ $V_{truck} = 58.4\,kip$

Shear due to design truck at harping point $V_{truck.h} := \left[axle \cdot \left(2L - 2x_h - axle_{truck}\right)\right] \div L$ $V_{truck.h} = 35.0\,kip$

6.2 Shear and Bending Moment due to AASHTO Tandem

Bending Moment

- under one axle at 1ft from the CL Span
- take moments about max location
- conservatively assumes max moment occurs @ CL span

Distance from bridge midspan to c.g. of tandem axle set $e_{cg.tand} := 1\,ft$ $e_{cg.tand} = 1.0\,ft$

Reaction at right support $R_{r.tand}(l) := \frac{Tandem}{l} \cdot \left(l + axle_{tand} - 2e_{cg.tand}\right)$ $R_{r.tand}(L) = 25\,k$

Bending moment under center heavy axle (peak location), per loaded lane $M_{tand}(l) := R_{r.tand}(l) \cdot \left(\frac{l}{2} + e_{cg.tand}\right) - axle_{tand} \cdot Tandem$

$M_{tand}(L) = 1575\,kip \cdot ft$

Critical live load case $LL_{case} := if\left(M_{truck}(L) > M_{tand}(L), "truck", "tandem"\right)$ $LL_{case} = "truck"$

Final live load bending moment $M_{LL.max} := \max\left(M_{truck}(L), M_{tand}(L)\right)$ $M_{LL.max} = 2063.0\,kip \cdot ft$

Shear

- at d from face of support
- place live load at d from support

Tandem axle shear at critical section $V_{tand} := \frac{Tandem \cdot \left(2L - 2d_{est} - axle_{tand}\right)}{L}$ $V_{tand} = 47.0\,kip$

Tandem axle shear at harping point $V_{tand.h} := \frac{Tandem \cdot \left(2L - 2 \cdot x_h - axle_{tand}\right)}{L}$ $V_{tand.h} = 29.2\,kip$

Final live load shear at critical section $V_{LL.max} := \max\left(V_{truck}, V_{tand}\right)$ $V_{LL.max} = 58.4\,ki$

Final live load shear at harping point $V_{LL.max.h} := \max\left(V_{truck.h}, V_{tand.h}\right)$ $V_{LL.max.h} = 35.0$

Bending moment for shear design

Live load bending moment for shear at critical section $M_{v.LL.max} := V_{LL.max} \cdot d_{est}$ $M_{v.LL.max} = 345.4\,kip \cdot f$

6.3 Shear and Bending Moment due to AASHTO Lane Load

Bending Moment

Function for bending moment on simple span beam $M_{ss}(w, l, x) := \frac{w \cdot x}{2} \cdot (l - x)$ $M_{ss}\left(2\frac{kip}{ft}, \sqrt{8}\,ft, \frac{\sqrt{8}}{2}\,ft\right) = 2.0\,kip \cdot f$

Bending moment due to lane load $M_{lane} := M_{ss}\left(w_{lane}, L, 0.5 \cdot L\right)$ $M_{lane} = 1352\,kip \cdot ft$

Shear

Formula for shear calc on simple spt bm with uniform load

$$V_{ss}(w, L, x) := w \cdot \left(\frac{L}{2} - x\right)$$

Shear due to lane load at critical section

$$V_{lane} := V_{ss}(w_{lane}, L, d_{est}) \qquad V_{lane} = 37.8\,kip$$

Shear due to lane load at harping point

$$V_{lane.h} := V_{ss}(w_{lane}, L, x_h) \qquad V_{lane.h} = 8.4\,kip$$

Bending moment for shear design

Bending moment at d from spt

$$M_{v.lane} := M_{ss}(w_{lane}, L, d_{est}) \qquad M_{v.lane} = 234.9\,kip\cdot$$

6.4 Dynamic Load Allowance, IM (LRFD 3.6.2)

Note: The dynamic load allowance shall not applied to pedestrian loads or to the design lane load.

All other limit states

$$IM := 33 \cdot \%$$

Total live load bending moment at midspan

$$M_{LL} := M_{LL.max} \cdot (1 + IM) + M_{lane} \qquad M_{LL} = 4096\,kip\cdot ft$$

Total live load shear at d from spt (critical section)

$$V_{LL} := V_{LL.max} \cdot (1 + IM) + V_{lane} \qquad V_{LL} = 115\,kip$$

Bending moment for shear design at critical section

$$M_{v.LL} := M_{v.LL.max} \cdot (1 + IM) + M_{v.lane} \qquad M_{v.LL} = 694.4\,kip\cdot ft$$

Total live load shear at harping point

$$V_{LL.h} := V_{LL.max.h} \cdot (1 + IM) + V_{lane.h} \qquad V_{LL.h} = 55\,kip$$

6.5 Distribution of Live Load

Distribution Factor (DF) for Moment on interior girder

Range of applicability (LRFD Table 4.6.2.2.2b-1), case k

- Width of deck is constant
- Beams are parallel
- Beams have approximately the same stiffness
- Curvature in plan is less than the limit specified in LRFD 4.6.1.2.4

Distance from exterior edge of exterior girder to interior edge of curb (LRFD 4.6.2.2)

$$d_e := overhang - cw - 0.5 \cdot b_w \qquad d_e = 2.5\,ft$$

Roadway overhang check

$$chk_{6,1} := if\left(d_e \le 3ft, "OK", "NG"\right) \qquad chk_{6,1} = "OK"$$

Girder spacing check

$$chk_{6,2} := if(3.5 \cdot ft \le S \le 16.0 \cdot ft, "OK", "NG") \qquad chk_{6,2} = "OK"$$

Slab thickness check

$$chk_{6,3} := if\left(4.5 \cdot in \le t_s \le 12.0 \cdot in, "OK", "NG"\right) \qquad chk_{6,3} = "OK"$$

Beam span check

$$chk_{6,4} := if(20 \cdot ft \le L \le 240 \cdot ft, "OK", "NG") \qquad chk_{6,4} = "OK"$$

Minimum beam count check

$$chk_{6,5} := if\left(N_b \ge 4, "OK", "NG"\right) \qquad chk_{6,5} = "OK"$$

Multiple presence factors shall not be applied except for exterior girders with special requirement (LRFD 3.6.1.1.2 & 4.6.2.2.2d).

Distance between the centers of gravity of the basic beam and deck

$$e_g := Y_{bs} - Y_{bg} \qquad e_g = 41.9\,in$$

Longitudinal sitffness parameter

$$K_g := n \cdot \left(I_g + A_g \cdot e_g^{\,2}\right) \qquad \text{LRFD 4.6.2.2.1} \qquad K_g = 3.44 \times 10^6\,in^4$$

Longitudinal sitffness parameter check $chk_{6,6} := if\left(10^4 in^4 \le K_g \le 7\cdot 10^6 in^4, "OK", "NG"\right)$ $chk_{6,6} = "OK"$

DF for interior girder

$$DF_i := \begin{cases} 0.075 + \left(\frac{S}{9.5\cdot ft}\right)^{0.6}\cdot\left(\frac{S}{L}\right)^{0.2}\cdot\left(\frac{K_g}{L\cdot t_s^{\,3}}\right)^{0.1} & \text{if } N_L > 1 \\ 0.06 + \left(\frac{S}{14\cdot ft}\right)^{0.4}\cdot\left(\frac{S}{L}\right)^{0.2}\cdot\left(\frac{K_g}{L\cdot t_s^{\,3}}\right)^{0.1} & \text{if } N_L = 1 \end{cases} \qquad DF_i = 0.6$$

Distribution Factor (DF) for Moment on exterior girder

Range of applicability (LRFD Table 4.6.2.2.2d-1), case k
Lever rule calculation (WSDOT Design Memo 2/22/99)

Minimum distance to curb from LL wheel $curb_{min.sp} := 2ft$

distance for lever rule load calc $d_1 := S + d_e - curb_{min.sp} - axlewidth$ $d_1 = 1.0\,ft$

lever rule distribution $DF_{lever} := \frac{2\cdot d_1 + axlewidth}{S}\cdot\left(\frac{1.0}{2}\right)$ $DF_{lever} = 0.6$

DFfor exterior girder

$$DF_e := \begin{cases} DF_i & \text{if } (overhang - cw) \le 0.5\cdot S \\ DF_{lever} & \text{otherwise} \end{cases} \qquad DF_e = 0.6$$

Reduction in Moment DF for Skewed Bridges (LRFD 4.6.2.2.2e, case k)

Note: Applied when the difference between skew angles of two adjacent lines of support < 10 deg.

Check on skew angle $chk_{6,7} := if\left(30\cdot deg \le \theta_{sk} \le 60\cdot deg, "OK", "NG"\right)$ $chk_{6,7} = "OK"$

Check on girder spacing $chk_{6,8} := if(3.5\cdot ft \le S \le 16.0\cdot ft, "OK", "NG")$ $chk_{6,8} = "OK"$

Check on girder span $chk_{6,9} := if(20\cdot ft \le L \le 240\cdot ft, "OK", "NG")$ $chk_{6,9} = "OK"$

Check on girder count $chk_{6,10} := if\left(N_b \ge 4, "OK", "NG"\right)$ $chk_{6,10} = "OK"$

Parameters for skew equation

$$c_1 := \begin{cases} 0.0 & \text{if } \theta_{sk} < 30\cdot deg \\ 0.25\cdot\left(\frac{K_g}{L\cdot t_s^{\,3}}\right)^{0.25}\cdot\left(\frac{S}{L}\right)^{0.5} & \text{otherwise} \end{cases} \qquad c_1 = 0.1$$

$$SK := \begin{cases} 1 - c_1\cdot(\tan(60\cdot deg))^{1.5} & \text{if } \theta_{sk} > 60\cdot deg \\ 1 - c_1\cdot\left(\tan\left(\theta_{sk}\right)\right)^{1.5} & \text{otherwise} \end{cases} \qquad SK = 1.0$$

Reduced DF for moment

$$DF := \begin{cases} SK\cdot DF_i & \text{if girder} = "interior" \\ SK\cdot DF_e & \text{if girder} = "exterior" \end{cases} \qquad DF = 0.6$$

7. Computation of Midspan Stresses

7.1 Stresses due to Weight of Girder

Weight of girder $w_g := A_g \cdot w_c$ $w_g = 1.027\,\text{kip} \div \text{ft}$

Bending moment @ CL Span $M_g := w_g \cdot L^2 \div 8$ $M_g = 2170\,\text{kip}\cdot\text{ft}$

Stress at top of girder @ CL Span $f_{tg} := -M_g \div S_{tg}$ $f_{tg} = -1.36\,\text{ksi}$

Stress at bottom of girder @ CL Span $f_{bg} := M_g \div S_{bg}$ $f_{bg} = 1.26\,\text{ksi}$

7.2 Stress due to Weight of Slab and Pad

Weight of slab

$$w_s := \begin{cases} t_{s2}\cdot(S)\cdot w_c & \text{if girder = "interior"} \\ \left[t_{s2}\cdot\left(\frac{S}{2} + \text{overhang}\right)\cdot w_c\right] & \text{if girder = "exterior"} \end{cases}$$

$w_s = 0.65\,\text{kip} \div \text{ft}$

Depth of slab pad is fillet depth @ CL Span (assume uniform distribution) $t_{pu} := A - t_{s2}$ $t_{pu} = 3.3\,\text{in}$

Weight of pad $w_{pu} := t_{pu}\cdot b_f \cdot w_c$ $w_{pu} = 0.27\,\text{kip} \div \text{ft}$

Weight of slab and pad $w_{spu} := w_s + w_{pu}$ $w_{spu} = 0.92\,\frac{\text{kip}}{\text{ft}}$

Bending moment along length of girder due to slab and (constant depth) pad $M_{sp} := M_{ss}(w_{spu}, L, 0.5\cdot L)$ $M_{sp} = 1934\,\text{kip}\cdot\text{ft}$

Stress at top of girder $f_{ts} := -M_{sp} \div S_{tg}$ $f_{ts} = -1.21\,\text{ksi}$

Stress at bottom of girder $f_{bs} := M_{sp} \div S_{bg}$ $f_{bs} = 1.12\,\text{ksi}$

Plot of (simple support) bending moment along length of girder

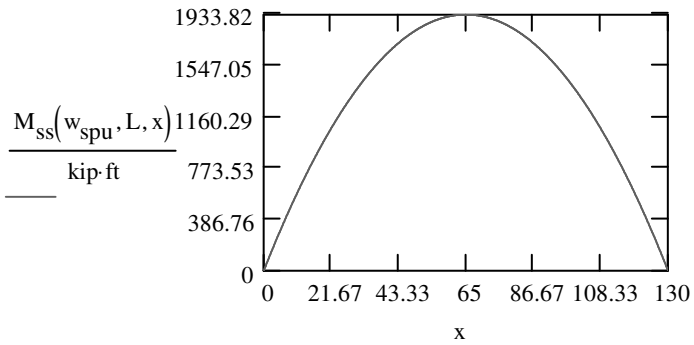

7.3 Stresses due to Weight of Diaphragm (on noncomposite section)

Intermediate diaphragms are not required (LRFD 5.13.2.2) for straight girders; but BDM 5-A (girder details) requires intermediate diaphragms @ 1/4 point of span for span over 120 ft.

Get required intermediate diaphragms by girder type and span girdertype = "WF74G"

Span of girders $L = 130.0\,ft$

Depth of girder $d_g = 74.0\,in$

Number of intermediate diaphragms (typ)

$$n_{diaph} := \begin{cases} 3 & \text{if } L > 120ft \\ 2 & \text{if } 80ft < L \le 120ft \\ 1 & \text{if } 40ft < L \le 80ft \\ 0 & \text{if } L \le 40ft \end{cases} \qquad n_{diaph} = 3$$

$360in^2 \cdot (S - b_w) w_c = 2.4\,kip$

Diaphragm thickness $t_{diaph} := 8in$ BDM 5-A

Estimate diaphragm depth or get from BDM std dwgs for girder details $d_{diaph} := 3ft + 9in$ $d_{diaph} = 45.0\,in$

Area of intermediate diaphragm $A_{intd} := t_{diaph} \cdot d_{diaph}$ $A_{intd} = 360.0\,in^2$

Disphragm point load on girder $P_d := 0.5 A_{intd} \cdot (S - b_w) \cdot w_c$ $P_d = 1.2\,kip$

Total diaphragm point load on design girder (two sides if interior girder)

$$P := \begin{cases} 2 \cdot P_d & \text{if girder = "interior"} \\ P_d & \text{if girder = "exterior"} \end{cases} \qquad P = 2.4\,kip$$

Induced bending moment in girder

$$M_d := \begin{cases} P \cdot [L - (0.3 + 0.1)L] & \text{if } n_{diaph} = 4 \\ P \cdot \left(\frac{1.5 \cdot L}{2} - \frac{L}{4}\right) & \text{if } n_{diaph} = 3 \\ P \cdot \left(\frac{L}{2} - \frac{L}{6}\right) & \text{if } n_{diaph} = 2 \\ \frac{P}{2} \cdot \left(\frac{L}{2}\right) & \text{if } n_{diaph} = 1 \\ 0 \cdot kip \cdot ft & \text{otherwise} \end{cases} \qquad M_d = 155.7\,kip \cdot ft$$

Stress at top of girder $f_{td} := -M_d \div S_{tg}$ $f_{td} = -0.1\,ksi$

Stress at bottom of girder $f_{bd} := M_d \div S_{bg}$ $f_{bd} = 0.09\,ksi$

7.4 Stresses due to Superimposed Deads Load (SIDL) on Composite Section

Weight of one traffic barrier is $tb := 0.45 \cdot kip \div ft$ BDM 3.1.1

DF for one traffic barrier: distributed over min of 1/2 of girders or 3 girders $DF_{tb} := \min\left(\text{floor}\left(\frac{N_b}{2}\right), 3\right)$ BDM 5.6.2 B.2.d $DF_{tb} = 3.0$

Weight of traffic barrier on one girder $w_b := tb \div DF_{tb}$ $w_b = 0.2\,kip \div ft$

Bending moment $M_b := M_{ss}(w_b, L, 0.5 \cdot L)$ $M_b = 316.9\,kip \cdot ft$

Stress at top of slab $f_{tsb} := -M_b \div S_{ts}$ $f_{tsb} = -0.07\,ksi$

Stress at top of girder	$f_{tb} := -M_b \div S_t$	$f_{tb} = -0.08\,ksi$
Stress at bottom of girder	$f_{bb} := M_b \div S_b$	$f_{bb} = 0.15\,ksi$

7.5 Concrete Stress due to Live Load on Composite Section

Bending moment	$M_L := M_{LL} \cdot DF$	$M_L = 2369\,kip \cdot ft$

Stresses for Limit State: Service I (compression in concrete)

Stress at top of slab	$f_{tsL} := -M_L \div S_{ts}$	$f_{tsL} = -0.54\,ksi$
Stress at top of girder	$f_{tL} := -M_L \div S_t$	$f_{tL} = -0.62\,ksi$

Stresses for Limit State: Service III (tension in concrete)

Stress at bottom of girder	$f_{bL} := (0.8 \cdot M_L) \div S_b$	$f_{bL} = 0.9\,ksi$

7.6 Summary of Stresses at Mid-span

	@ top of slab	*@ top of girder*	*@ bot. of girder*
girder		$f_{tg} = -1.36\,ksi$	$f_{bg} = 1.26\,ksi$
slab+pad		$f_{ts} = -1.21\,ksi$	$f_{bs} = 1.12\,ksi$
diaphragm		$f_{td} = -0.1\,ksi$	$f_{bd} = 0.09\,ksi$
SIDL	$f_{tsb} = -0.07\,ksi$	$f_{tb} = -0.08\,ksi$	$f_{bb} = 0.15\,ksi$
LL+IM (Service I)	$f_{tsL} = -0.54\,ksi$	$f_{tL} = -0.62\,ksi$	
LL+IM (Service III)			$f_{bL} = 0.9\,ksi$

Service I - 1.0 DC +1.0 (LL+IM) - top of girder	$f_{tgI} := f_{tg} + f_{ts} + f_{td} + f_{tb} + f_{tL}$	$f_{tgI} = -3.37\,ksi$
Service III - 1.0 DC +0.8 (LL+IM) - bottom of girder	$f_{bgIII} := f_{bg} + f_{bs} + f_{bd} + f_{bb} + f_{bL}$	$f_{bgIII} = 3.53\,ksi$

8. Prestressing Forces and Stress Limits

8.1 Stress Limits for Prestressing Strands

Service limit state after all losses	$f_{pe.lim} := 0.80 \cdot f_{py}$	LRFD Table 5.9.3-1	$f_{pe.lim} = 194.4\,ksi$
Stress limit immediately prior to transfer (after relaxation losses prior to transfer)	$f_{pbt.lim} := 0.75 \cdot f_{pu}$		$f_{pbt.lim} = 202.5\,ksi$
Initial stress in PS at jacking	$f_{pj} := f_{pbt.lim}$		$f_{pj} = 202.5\,ksi$

8.2 Allowable Concrete Stresses at Service Limit State

Compressive Stresses Limits in PS Concrete After PS Losses (LRFD 5.9.4.2.1, BDM 5.2.3-B.) - Service I

Permanent loads + effective prestress	$f_{s.DL.lim} := -0.45 \cdot f'_c$	$f_{s.DL.lim} = -3.8\,ksi$
Perm & transient loads + eff PS @ Ship and Perm	$f_{s.SH.lim} := -0.60 \cdot f'_c$	$f_{s.SH.lim} = -5.1\,ksi$
Perm & trans loads + eff PS @ transfer and lifting	$f_{s.SH.i.lim} := -0.60 \cdot f'_{ci}$	$f_{s.SH.i.lim} = -4.5\,k$
LL plus 1/2 (eff PS + perm loads)	$f_{s.LL.lim} := -0.40 \cdot f'_c$	$f_{s.LL.lim} = -3.4\,ksi$

Tensile Stress Limits in PS Concrete

Notes:
1. For the service load combinations which involves traffic loading, tension stress in members with bonded prestressing strands should be investigated using Service III load combination.
2. Tension in precompressed tensile zone assuming uncracked section

Stress at transfer and lifting (bonded reinf, other than precompressed tensile zone)	$f_{t.i.lim} := 0.19 \cdot \sqrt{f'_{ci} \div ksi} \cdot ksi$	BDM 5.2.3-B.	$f_{t.i.lim} = 0.5\,ksi$
Stress during shipping (bonded reinf, other than precompressed tensile zone)	$f_{t.lim} := 0.19 \cdot \sqrt{f'_c \div ksi} \cdot ksi$	BDM 5.2.3-B.	$f_{t.lim} = 0.6\,ksi$
Limit in precompressed tensile zone	$f_{t.pc.lim} := 0ksi$	BDM 5.2.3-B.	$f_{t.pc.lim} = 0.0\,ksi$

8.3 Jacking Forces

Jacking force for straight strands	$P_{js} := f_{pj} \cdot N_s \cdot A_p$	$P_{js} = 1230.4\,kip$
Jacking force for harped strands	$P_{jh} := f_{pj} \cdot N_h \cdot A_p$	$P_{jh} = 791.0\,kip$
Jacking force for temporary strands	$P_{jt} := f_{pj} \cdot N_t \cdot A_p$	$P_{jt} = 263.7\,kip$
Total jacking force	$P_{jack} := P_{jh} + P_{js} + P_{jt}$	$P_{jack} = 2285\,kip$

8.4 C.G. of Prestress

Final number of prestress strands	$N_p := N_s + N_h$	$N_p = 46$

Total area of prestress strands $A_{ps} := A_p \cdot N_p$ $A_{ps} = 10.0\,in^2$

Area of temporary strands $A_{temp} := A_p \cdot N_t$ $A_{temp} = 1.3\,in^2$

Area of final plus temporary strands $A_{pstemp} := A_p \cdot (N_t + N_p)$ $A_{pstemp} = 11.3\,in^2$

c.g. to straight strands from bottom of girder, E (check specific girder pattern in BDM girder details, 5-A)

$$E := \begin{cases} 2\cdot in & \text{if } N_s \le 16 \\ 2\cdot in + \dfrac{(N_s - 16)\cdot(2\cdot in)}{N_s} & \text{if } 16 < N_s \le 32 \\ 4\cdot in + \dfrac{(N_s - 32)\cdot(2\cdot in)}{N_s} & \text{if } 32 < N_s \le 42 \\ 6\cdot in + \dfrac{(N_s - 42)\cdot(2\cdot in)}{N_s} & \text{if } 42 < N_s \le 46 \\ \text{"too many"} & \text{otherwise} \end{cases}$$

$E = 2.86\,in$

girdertype = "WF74G"

$N_s = 28$

$N_h = 18$

$N_t = 6$

c.g. to harped strands from bottom of girder, E (check specific girder pattern in BDM girder details, 5-A)

$F_{CL} := \text{if}\left[N_h > 12, \dfrac{(N_h - 12)\cdot(3\cdot in)}{N_h} + 3\cdot in, 3\cdot in\right]$ $F_{CL} = 4\,in$

c.g. of straight strands to c.g. of girder $e_s := Y_{bg} - E$ $e_s = 32.76\,in$

c.g. of harped strands to c.g. of girder $e_h := Y_{bg} - F_{CL}$ $e_h = 31.62\,in$

c.g. of final strands to c.g. of girder $e_p := (e_s \cdot N_s + e_h \cdot N_h) \div N_p$ $e_p = 32.32\,in$

c.g. of temporary strands to c.g. of girder $e_{temp} := Y_{tg} - 2\cdot in$ $e_{temp} = 36.38\,in$

c.g. of final and temp strands to c.g. of girder $e_{ptemp} := (e_p \cdot N_p - e_{temp} \cdot N_t) \div (N_p + N_t)$ $e_{ptemp} = 24.39\,in$

8.5 Loss of Prestress (LRFD 5.9.5.1)

Stress in strands before prestress transfer

Time at tansfer $t_o := 1\,day$

Relaxation at transfer $f_{pR1} := -\dfrac{\log(24.0 \cdot t_o \div day)}{40} \cdot \left(\dfrac{f_{pj}}{f_{py}} - 0.55\right) \cdot f_{pj}$ $f_{pR1} = -2.0\,ksi$

Prestress at transfer $f_{pi} := f_{pj} + f_{pR1}$ $f_{pi} = 200.5\,ksi$

Initial Loss due to Elastic Shortening (BDM 5.1.4A)

Estimate of stress in strands after release from BDM $pst := 0.7 \cdot f_{pu}$ $pst = 189.0\,ksi$

Solve block for prestress after elastic shortening

Given $0 = f_{pj} + \frac{E_p}{E_{ci}} \cdot \left(-\frac{A_{pstemp} \cdot pst}{A_g} - \frac{A_{pstemp} \cdot pst \cdot e_{ptemp}^2}{I_g} + \frac{M_g \cdot e_{ptemp}}{I_g} \right) - pst$

Stress in prestress strands $p_{st} := \text{Find}(pst)$ $p_{st} = 186.4\,\text{ksi}$

Force in all strands $P_{ps} := A_{pstemp} \cdot p_{st}$ $P_{ps} = 2104\,\text{kip}$

Concrete stress at c.g. of PS due to PS force immediately after transfer (includes girder self-weight) @ CL span $f_{cgp} := -\frac{P_{ps}}{A_g} - \frac{P_{ps} \cdot e_{ptemp}^2}{I_g} + \frac{M_g \cdot e_{ptemp}}{I_g}$ $f_{cgp} = -3.1\,\text{ksi}$

Initial loss in PS due to concrete elastic shortening $\Delta f_{pES} := \frac{E_p}{E_{ci}} \cdot f_{cgp}$ $\Delta f_{pES} = -16.1\,\text{ksi}$

Check stress in prestress strands $f_{pj} + \Delta f_{pES} = 186.4\,\text{ksi}$ $p_{st} = 186.4\,\text{ksi}$

Approximate Lump Sum Estimate of Time Dependent Losses Alternate Method (BDM 5.1.4 C)

PS loss = loss due to concrete shrinkage + creep and PS relaxation $\Delta f_{pLT} = \Delta f_{pSR} + \Delta f_{pCR} + \Delta f_{pR2}$

Concrete strength criteria check $chk_{8,1} := \text{if}\left(f'_{ci} > 3.5 \cdot \text{ksi}, \text{"OK"}, \text{"NG"}\right)$ $chk_{8,1} = \text{"OK"}$

Other criteria:
- Normal density concrete
- Concrete is either steam or moist cured
- Prestressing is by low relaxation strands
- Sited in average exposure condition and temperatures

Correction factore for ambient air RH $\gamma_h := 1.7 - 0.01 \cdot (H \div \%)$ $\gamma_h = 1.0$

Correction factor for concrete strength at transfer $\gamma_{st} := 5 \div \left(1 + f'_{ci} \div \text{ksi}\right)$ $\gamma_{st} = 0.6$

Stress in PS just before transfer (after relaxation R1) $f_{pi} = 200.5\,\text{ksi}$

Approx lump sum long term PS losses $\Delta f_{pLT} := -\left(10.0 \cdot \frac{f_{pi} \cdot A_{ps}}{\text{ksi} \cdot A_g} \gamma_h \cdot \gamma_{st} + 12.0 \cdot \gamma_h \cdot \gamma_{st} + 2.5\right) \text{ksi}$ $\Delta f_{pLT} = -21.3\,\text{ksi}$

Total Prestress Losses

Total PS loss by lump sum estimate $\Delta f_{pT} := \Delta f_{pLT} + \Delta f_{pES}$ $\Delta f_{pT} = -37.39\text{ksi}$

Effective Prestress

Effective prestress $f_{pe} := f_{pj} + \Delta f_{pT}$ BDM 5.4.1A $f_{pe} = 165.1\text{ksi}$

Check effective prestress limit $chk_{8,2} := \text{if}\left(f_{pe} \le f_{pe.lim}, \text{"OK"}, \text{"NG"}\right)$ $chk_{8,2} = \text{"OK"}$

Effective prestress force $P_e := N_p \cdot A_p \cdot f_{pe}$ $P_e = 1648.1\,\text{kip}$

Tension at bottom of girder $f_{t.bg} := f_{bgIII} - \frac{P_e}{A_g} - \frac{P_e \cdot e_p}{S_{bg}}$ $f_{t.bg} = -0.8\,\text{ksi}$

Check allowable concrete tension $chk_{8,3} := \text{if}\left(f_{t.bg} > f_{t.pc.lim}, \text{"NG"}, \text{"OK"}\right)$ $chk_{8,3} = \text{"OK"}$

9. Stresses at Service Limit State

9.1 Final Stresses at Midspan

Stresses at top of slab

Permanent load + PS

$f_{tsb} = -0.1\,ksi$ $f_{s.DL.lim} = -3.8\,ksi$

$chk_{9,1} := if(f_{tsb} > f_{s.DL.lim}, "OK", "NG")$ $chk_{9,1} = "OK"$

Permanent and transient loads (traffic barrrier + LL)

$f_{tsb} + f_{tsL} = -0.6\,ksi$ $f_{s.SH.lim} = -5.1\,ksi$

$chk_{9,2} := if(f_{tsb} + f_{tsL} > f_{s.SH.lim}, "OK", "NG"$ $chk_{9,2} = "OK"$

LL + 1/2 (effective PS + permanent loads)

$f_{tsL} + 0.5 \cdot f_{tsb} = -0.6\,ksi$ $f_{s.LL.lim} = -3.4\,ksi$

$chk_{9,3} := if(f_{tsL} + 0.5 \cdot f_{tsb} > f_{s.LL.lim}, "OK", "$ $chk_{9,3} = "OK"$

Stresses at top of girder

Effective prestress

$$f_{tp} := -\frac{P_e}{A_g} + \frac{P_e \cdot e_p}{S_{tg}}$$ $f_{tp} = 1\,ksi$

Permanent loads (weight, pad, diaphragm, traffic barrier, PS)

$f_{tg} + f_{ts} + f_{td} + f_{tb} + f_{tp} = -1.8\,ksi$ $f_{s.DL.lim} = -3.8\,ksi$

$chk_{9,4} := if(f_{tg} + f_{ts} + f_{td} + f_{tb} + f_{tp} > f_{s.DL.lim}, "OK", "NC$ $chk_{9,4} = "OK"$

Permanent and transient loads

$f_{tg} + f_{ts} + f_{td} + f_{tb} + f_{tp} + f_{tL} = -2.4\,ksi$ $f_{s.SH.lim} = -5.1\,ksi$

$chk_{9,5} := if(f_{tg} + f_{ts} + f_{td} + f_{tb} + f_{tp} + f_{tL} > f_{s.SH.lim}, "OK", "N$ $chk_{9,5} = "OK"$

LL + 1/2 (effective PS + permanent loads)

$f_{tL} + 0.5 \cdot (f_{tg} + f_{ts} + f_{td} + f_{tb} + f_{tp}) = -1.5\,ksi$ $f_{s.LL.lim} = -3.4\,ksi$

$chk_{9,6} := if[f_{tL} + 0.5 \cdot (f_{tg} + f_{ts} + f_{td} + f_{tb} + f_{tp}) > f_{s.LL.lim}, "OK", "NG"$ $chk_{9,6} = "OK"$

9.2 Final Stresses at Harping Point

Stresses at top of slab (on composite section)

SIDL bending moment

$M_{bh} := M_{ss}(w_b, L, x_h)$ $M_{bh} = 304.1\,kip \cdot ft$

Stress at top of slab

$f_{tsb} := -M_{bh} \div S_{ts}$ $f_{tsb} = -0.07\,ksi$

Lane load bending moment

$M_{lane.h} := M_{ss}(w_{lane}, L, x_h)$ $M_{lane.h} = 1297.5\,k$

LL bending moment estimate, check with QConBridge (assumes HS20 wheel at harping point)

$$M_{LL.h.s} := \begin{cases} \frac{x_h \cdot axle \cdot (2.25 \cdot L - 2.25 \cdot x_h - 1.5 \cdot axle_{truck})}{L} & \text{if } L > 4 \cdot axle_{truck} \\ \frac{x_h \cdot axle \cdot (2 \cdot L - 2 \cdot x_h - axle_{truck})}{L} & \text{otherwise} \end{cases}$$

Bending moment: Service I - LL +IM $M_{LL.h} := M_{LL.h.s} \cdot (1 + IM) + M_{lane.h}$ $M_{LL.h} = 3927\,kip\cdot$

Bending moment reduced for distribution $M_{Lh} := M_{LL.h} \cdot DF$ $M_{Lh} = 2271\,kip\cdot ft$

Stress at top of slab $f_{tsL} := -M_{Lh} \div S_{ts}$ $f_{tsL} = -0.52\,ksi$

Check versus stress limits

Permanent load + PS $f_{tsb} = -0.1\,ksi$ $f_{s.DL.lim} = -3.8\,ks$

$chk_{9,7} := if\left(f_{tsb} < f_{s.DL.lim}, "NG", "OK"\right)$ $chk_{9,7} = "OK"$

Permanent and transient loads (traffic barrrier + LL) $f_{tsb} + f_{tsL} = -0.6\,ksi$ $f_{s.SH.lim} = -5.1\,ksi$

$chk_{9,8} := if\left(f_{tsb} + f_{tsL} < f_{s.SH.lim}, "NG", "OK"\right)$ $chk_{9,8} = "OK"$

LL + 1/2 (effective PS + permanent loads) $f_{tsL} + 0.5 \cdot f_{tsb} = -0.6\,ksi$ $f_{s.LL.lim} = -3.4\,ksi$

$chk_{9,9} := if\left(f_{tsL} + 0.5 \cdot f_{tsb} < f_{s.LL.lim}, "NG", "$ $chk_{9,9} = "OK"$

Stresses at top of girder (on girder only - noncomposite)

Bending moment due to self-weight $M_{gh} := M_{ss}\left(w_g, L, x_h\right)$ $M_{gh} = 2083\,kip\cdot ft$

Stress at top of girder due to self-weight $f_{tg} := -M_{gh} \div S_{tg}$ $f_{tg} = -1.3\,ksi$

Bending moment due to slab and pad $M_{sp.h} := M_{ss}\left(w_{spu}, L, x_h\right)$ $M_{sp.h} = 1855.9\,kip$

Stress at top of girder due to slab and pad $f_{ts} := -M_{sp} \div S_{tg}$ $f_{ts} = -1.21\,ksi$

Bending moment due to diaphragm

$$M_{dh} := \begin{cases} P\cdot\left[1.5\cdot x_h - \left(x_h - \frac{L}{4}\right)\right] & \text{if } n_{diaph} = 3 \\ P\cdot\left[x_h - \left(x_h - \frac{L}{3}\right)\right] & \text{if } n_{diaph} = 2 \\ \frac{P}{2}\cdot\left(x_h\right) & \text{if } n_{diaph} = 1 \\ 0\cdot kip\cdot ft & \text{otherwise} \end{cases}$$

$M_{dh} = 140.1\,kip\cdot ft$

Stress at top of girder due to diaphragm $f_{td} := -M_{dh} \div S_{tg}$ $f_{td} = -0.09\,ksi$

Stress at top of girder due to eff PS $f_{tp} := -\frac{P_e}{A_g} + \frac{P_e \cdot e_p}{S_{tg}}$ $f_{tp} = 1\,ksi$

Stresses at top of girder (on composite section)

SIDL $f_{tb} := -M_{bh} \div S_t$ $f_{tb} = -0.08\,ksi$

LL+IM (Service I) $f_{tL} := -M_{Lh} \div S_t$ $f_{tL} = -0.6\,ksi$

Check versus stress limits

Permanent load + PS

$f_{tg} + f_{ts} + f_{td} + f_{tb} + f_{tp} = -1.7\,ksi$ $f_{s.DL.lim} = -3.8\,ksi$

$chk_{9,10} := if\left(f_{tg} + f_{ts} + f_{td} + f_{tb} + f_{tp} < f_{s.DL.lim}, "NG", "OK"\right)$ $chk_{9,10} = "OK"$

Permanent and transient loads (traffic barrrier + LL) $f_{tg} + f_{ts} + f_{td} + f_{tb} + f_{tp} + f_{tL} = -2.3\,ksi$ $f_{s.SH.lim} = -5.1\,ksi$

$chk_{9,11} := if\left(f_{tg} + f_{ts} + f_{td} + f_{tb} + f_{tp} + f_{tL} < f_{s.SH.lim}, "NG", "OK"\right)$ $chk_{9,11} = "OK"$

LL + 1/2 (effective PS + permanent loads) $0.5\cdot\left(f_{tg} + f_{ts} + f_{td} + f_{tb} + f_{tp}\right) + f_{tL} = -1.4\,ksi$ $f_{s.LL.lim} = -3.4\,ksi$

$chk_{9,12} := if\left[0.5\cdot\left(f_{tg} + f_{ts} + f_{td} + f_{tb} + f_{tp}\right) + f_{tL} < f_{s.LL.lim}, "NG", "OK"\right]$ $chk_{9,12} = "OK"$

Stresses at bottom of girder (on noncomposite section)

Stress at bottom of girder due to self-weight $f_{bg} := M_{gh} \div S_{bg}$ $f_{bg} = 1.21\,ksi$

Stress at bottom of girder due to slab&pad $f_{bs} := M_{sp.h} \div S_{bg}$ $f_{bs} = 1.08\,ksi$

Stress at bottom of girder due to diaphragm $f_{bd} := M_{dh} \div S_{bg}$ $f_{bd} = 0.08\,ksi$

Stress at bottom of girder due to eff PS $f_{bp} := -\frac{P_e}{A_g} - \frac{P_e \cdot e_p}{S_{bg}}$ $f_{bp} = -4.36\,ksi$

Stresses at bottom of girder (on composite section)

SIDL $f_{bb} := M_{bh} \div S_b$ $f_{bb} = 0.14\,ksi$

LL+IM (Service III) $f_{bL} := \left(M_{Lh} \cdot 0.8\right) \div S_b$ $f_{bL} = 0.86\,ksi$

Check versus stress limit

Permanent and transient loads + eff PS $f_{bg} + f_{bs} + f_{bd} + f_{bb} + f_{bL} + f_{bp} = -1.0\,ksi$ $f_{t.pc.lim} = 0.0\,ksi$

$chk_{9,13} := if\left(f_{bg} + f_{bs} + f_{bd} + f_{bb} + f_{bL} + f_{bp} > f_{t.pc.lim}, "NG", "OK"\right)$ $chk_{9,13} = "OK"$

10. Stresses at Transfer

Note: The prestressing force may be assumed to vary linearly from 0.0 at the point where bonding commences (free end of strand maximum at the transfer length.

Transfer Length $D := 60 \cdot d_b$ BDM 5.1.3-D.1 $D = 36\,in$

10.1 Concrete Stress at Transfer at "D" from End of Girder

Note: Assume the girder is supported at both ends at transfer

Moment due to weight of girder $M_{gD} := M_{ss}(w_g, GL, D)$ $M_{gD} = 200.3\,kip \cdot ft$

Prestressing force at transfer

For straight strands $P_{sis} := p_{st} \cdot N_s \cdot A_p$ $P_{sis} = 1133\,kip$

For harped strands $P_{sih} := p_{st} \cdot N_h \cdot A_p$ $P_{sih} = 728.1\,kip$

For temporary strands $P_{sit} := p_{st} \cdot N_t \cdot A_p$ $P_{sit} = 242.7\,kip$

Total PS at transfer $P_{si} := P_{sis} + P_{sih} + P_{sit}$ $P_{si} = 2104\,kip$

Eccentricity for harped strand at "D" from end of girder

Distance from the top of girder to the c.g. of the harped strands at the end of girder

$$rows_h := floor(N_h \div 2)$$

$$F_o := 4 \cdot in + \frac{\left[\sum_{i=0}^{rows_h - 1} (2 \cdot i \cdot 2 \cdot in)\right] + (N_h - 2 \cdot rows_h) \cdot (rows_h)\, 2 \cdot in}{N_h} \qquad F_o = 12\,in$$

Harping rise $R_h := d_g - F_o - F_{CL}$ $R_h = 58\,in$

Harped strand slope $slope_h := R_h \div (x_h + P2)$ $slope_h = 0.1$

check harped strand slope, $m_{harp} :=$

$g \leftarrow girdertype$

$s \leftarrow slope_h$

$s \le 0.125$ if $(g = "W83G") \vee (g = "W95G")$

$s \le 0.166$ otherwise

$m_{harp} = 1$

Check slope of harped strands $chk_{10,1} := if(m_{harp} = 1, "OK", "NG")$ $chk_{10,1} = "OK"$

Holddown force at jacking (for shop drawing check) $P_{hd} := f_{pj} \cdot N_h \cdot A_p \cdot \sin(\operatorname{atan}(slope_h))$ $P_{hd} = 71.6\,kip$

Harped strands eccentricity at D from girder end (upward) $e_{Dh} := Y_{tg} - F_o - slope_h \cdot D$ $e_{Dh} = 23.11\,in$

Stresses at top of girder

Stress at top of girder $$f_{tg.D} := -\frac{M_{gD}}{S_{tg}} - \frac{P_{si}}{A_g} + \frac{P_{sis} \cdot e_s - P_{sih} \cdot e_{Dh} - P_{sit} \cdot e_{temp}}{S_{tg}} \qquad f_{tg.D} = -1.8\,ksi$$

Allowable short-term tension with bonded reinforcement in other than precompressed tensile zone (BDM 5.2.3)

$f_{st.bond.lim} := 0.19 \cdot \sqrt{f'_{ci} \div ksi}\, ksi$ $f_{st.bond.lim} = 0.5\,ksi$

Check stress limit

$chk_{10,2} := if\left(f_{tg.D} \le f_{st.bond.lim}, "OK", "NG"\right)$ $chk_{10,2} = "OK"$

Stress at bottom of girder

Stress at bottom of girder

$$f_{bg.D} := \frac{M_{gD}}{S_{bg}} - \frac{P_{si}}{A_g} + \frac{-P_{sis} \cdot e_s + P_{sih} \cdot e_{Dh} + P_{sit} \cdot e_{temp}}{S_{bg}} \qquad f_{bg.D} = -2.7\,ksi$$

Check stress limit

$chk_{10,3} := if\left(f_{bg.D} \ge f_{s.SH.i.lim}, "OK", "NG"\right)$ $chk_{10,3} = "OK"$

10.2 Concrete Stresses at Transfer At Harping Point

Note: f'ci at lifting is more critical at lifting due to shifting of support points into mid-span

Bending moment due to weight of girder

$M_{gth} := M_{ss}\left[w_g, L, \left(P2 + x_h\right)\right]$ $M_{gth} = 2098.6\,kip \cdot ft$

Stresses at top of girder

Stress at top of girder

$$f_{tg.h} := -\frac{M_{gth}}{S_{tg}} - \frac{P_{si}}{A_g} + \frac{P_{sis} \cdot e_s + P_{sih} \cdot e_h - P_{sit} \cdot e_{temp}}{S_{tg}} \qquad f_{tg.h} = -0.9\,ksi$$

Check tension stress limit

$chk_{10,4} := if\left(f_{tg.h} \le f_{st.bond.lim}, "OK", "NG"\right)$ $chk_{10,4} = "OK"$

Check compression stress limit

$chk_{10,5} := if\left(f_{tg.h} \ge f_{s.DL.lim}, "OK", "NG"\right)$ $chk_{10,5} = "OK"$

Stress at bottom of girder

Stress at bottom of girder

$$f_{bg.h} := \frac{M_{gth}}{S_{bg}} - \frac{P_{si}}{A_g} + \frac{-P_{sis} \cdot e_s - P_{sih} \cdot e_h + P_{sit} \cdot e_{temp}}{S_{bg}} \qquad f_{bg.h} = -3.5\,ksi$$

Check stress limit

$chk_{10,6} := if\left(f_{bg.h} \ge f_{s.SH.i.lim}, "OK", "NG"\right)$ $chk_{10,6} = "OK"$

11. Strength Limit State

11.1 Ultimate Moment

Peak dead load bending moment-CL span $M_{DC} := M_g + M_{sp} + M_d + M_b$ $M_{DC} = 4577\,kip\cdot ft$

Live load bending moment-CL span $M_L = 2368.8\,kip\cdot ft$

Factored bending moment (ultimate) $M_u := \eta\cdot\left(\gamma_p\cdot M_{DC} + \gamma_L\cdot M_L\right)$ $M_u = 9866\,kip\cdot ft$

11.2 Flexural Resistance (LRFD 5.7.3)

Note: In PGSuper, moment capacity is computed using a non-linear strain-compatibility methodology.

Find stress in prestressing steel at nominal flexural resistance

- Use rectangular stress distribution in LRFD 5.7.3.1.1

Check for validity of f.ps eqn $chk_{11,1} := \text{if}\left(f_{pe} \ge 0.5\cdot f_{pu}, \text{"OK"}, \text{"NG"}\right)$ $chk_{11,1} = \text{"OK"}$

Factor for determination of c $k := 2\cdot\left(1.04 - f_{py} \div f_{pu}\right)$ LRFD 5.7.3.1.1 $k = 0.28$

Area of mild steel longitudinal reinf in bottom of girder $A_s := 0\cdot in^2$

Area of mild steel longitudinal reinf in top of section (slab or girder) $A'_s := 0\cdot in^2$ conservatively

Depth of compression flange $h_f := t_s$ $h_f = 7.0\,in$

Distance from extreme compression fiber to the centroid of the prestressing tendons $d_p := t_s + Y_{tg} + e_p$ $d_p = 77.7\,in$

Stress block factor (LRFD 5.7.2.2)

$$\beta_1 := \max\left[\begin{cases} 0.85 & \text{if } f'_{cs} \le 4ksi \\ \left[0.85 - 0.05\cdot\left(\dfrac{f'_{cs} - 4.0\cdot ksi}{1.0\cdot ksi}\right)\right] & \text{otherwise} \end{cases}, 0.65\right]$$ β

Distance between neutral axis and compression face

For flanged (T) section (BDM 5.2.9-A.)

$$c_f := \frac{A_{ps}\cdot f_{pu} - 0.85\cdot f'_{cs}\cdot\left(b_e - b_w\right)\cdot h_f}{0.85\cdot f'_{cs}\cdot\beta_1\cdot b_w + k\cdot A_{ps}\cdot f_{pu} \div d_p}$$ $c_f = 35.91\,in$

Notes:
1. For flange section, ignore the girder top flange
2. For simplicity, neglect the modular ratio of the girder/deck concrete.

For rectangular section

$$c_r := \frac{A_{ps}\cdot f_{pu}}{0.85\cdot f'_{cs}\cdot\beta_1\cdot b_e + k\cdot A_{ps}\cdot f_{pu} \div d_p}$$ $c_r = 11.46\,in$

Neutral axis distance

$$c := \begin{cases} c_r & \text{if } 0\cdot in \le c_r \le h_f \\ c_f & \text{otherwise} \end{cases}$$ $c = 35.91\,in$

Average stress in prestressing steel at nominal flexural resistance

$$f_{ps} := f_{pu}\cdot\left(1 - k\cdot\frac{c}{d_p}\right)$$

LRFD 5.7.3.1.1

$f_{ps} = 235.1\,\text{ksi}$

Depth of equivalen stress block

$$a := \beta_1\cdot c$$

$a = 30.53\,\text{in}$

Nominal flexural resistance (BDM 5.2.9-A.)

$$M_n := \begin{cases} A_{ps}\cdot f_{ps}\cdot\left(d_p - \frac{a}{2}\right) + 0.85\cdot f'_{cs}\cdot\left(b_e - b_w\right)\cdot h_f\left(\frac{a}{2} - \frac{h_f}{2}\right) & \text{if } h_f < c \\ A_{ps}\cdot f_{ps}\cdot\left(d_p - \frac{a}{2}\right) & \text{otherwise} \end{cases}$$

$M_n = 13884\,\text{kip}\cdot\text{ft}$

Flexure resistance factor

$$\phi_p := \phi_p\left(d_p, c\right)$$

$\phi_p = 0.8$

Factored flexural resistance

$$M_r := \phi_p\cdot M_n$$

$M_r = 10413\,\text{kip}\cdot\text{ft}$

$M_u = 9866\,\text{kip}\cdot\text{ft}$

Check bending moment @ CL span

$$chk_{11,2} := \text{if}\left(M_u \le M_r, \text{"OK"}, \text{"NG"}\right)$$

$chk_{11,2} = \text{"OK"}$

12. Limit for Reinforcement

12.1 Maximum Reinforcement (LRFD 5.7.3.3.1)

Effective depth from compr fiber to c.g. tensile reinf $d_e := \frac{A_{ps} \cdot f_{ps} \cdot d_p}{A_{ps} \cdot f_{ps}}$ $d_e = 77.7\,in$

Check on max reinf (NG = over-reinforced)
- over-reinforced sections are permitted if prestressed with adequate ductility

$c \div d_e = 0.5$

$chk_{12,1} := if\left(c \div d_e \le 0.42, "OK", "NG"\right)$ $chk_{12,1} = "NG"$

12.2 Minimum Reinforcement (LRFD 5.7.3.3.2)

Compressive stress in concrete due to final effective prestress force at midspan $f_{peA} := -\frac{P_e}{A_g} - \frac{P_e \cdot e_p}{S_{bg}}$ $f_{peA} = -4.36\,ksi$

Non-composite DL moment at section $M_{dnc} := M_g + M_d + M_{sp}$ $M_{dnc} = 4259.7\,kip$

Cracking moment (based on elastic stress) $M_{cr} := \min\left[\left[\left(f_{r.Mcr.min} - f_{peA}\right) \cdot S_b - M_{dnc} \cdot \left(\frac{S_b}{S_{bg}} - 1\right)\right]\right]$

$S_b \cdot f_{r.Mcr.min}$

$M_{cr} = 2271\,kip \cdot ft$

Minimum factored flexural resistance $M_{r.lim} := \min\left(1.2 \cdot M_{cr}, 1.33 \cdot M_u\right)$ $M_{r.lim} = 2725\,kip \cdot$

Check minimum flexural resistance $chk_{12,2} := if\left(M_r \ge M_{r.lim}, "OK", "NG"\right)$ $chk_{12,2} = "OK"$

12.3 Development of Prestressing Strand (BDM 5.1.3 D.2)

Pretensioning strand development length $l_d := 1.6 \cdot \left(\frac{f_{ps}}{ksi} - \frac{2}{3} \cdot \frac{f_{pe}}{ksi}\right) \cdot d_b$ $l_d = 10\,ft$

Min span to develop full strand strength $L_{e.d} := 2 \cdot \left(D + l_d\right)$ $L_{e.d} = 26.0\,ft$

13. Shear & Longitudinal Reinf Design

13.1 Shear Design Procedure

Distance betwen applied load and supporting rxn $d := d_e$ BDM 5.2.5 A; LRFD 5.8.1.1 $d = 77.7\,in$

Check for allowable shear model $model_v := \begin{cases} "sectional" & \text{if } L \div 2 \geq 2 \cdot d \\ "strut\&tie" & \text{otherwise} \end{cases}$ $model_v = "sectiona$

13.2 Shear Force Effect (BDM 5.2.4 C)

Compute effective shear depth

Note: d.e and a need to be modified to reflect the critical section location, also at harping point location.

Distance between resultants of tensile and compressive flexure forces $d_{v.temp} := d_e - a \div 2$ $d_{v.temp} = 62.4\,in$

Section total depth $h := d_g + t_s$ $h = 81.0\,in$

Effective shear depth (LRFD 5.8.2.9) $d_v := \max(d_{v.temp}, 0.9 \cdot d_e, 0.72 \cdot h)$ $d_v = 69.9\,in$

Critical section for shear (LRFD 5.8.3.2)

Distance to critical section from internal face of suppor $d_c := d_v$ since θ is not known $d_c = 69.9\,in$

Shear at critical section - Dead Load

Girder dead load $V_g := V_{ss}(w_g, L, d_c)$ $V_g = 60.79\,kip$

Slab+pad dead load $V_{sp} := V_{ss}(w_{spu}, L, d_c)$ $V_{sp} = 54.17\,kip$

Diaphragm loads $V_d := \begin{cases} 1.5 \cdot P & \text{if } n_{diaph} = 3 \\ 1.0 \cdot P & \text{if } n_{diaph} = 2 \\ 0.5 \cdot P & \text{if } n_{diaph} = 1 \\ 0 \cdot kip & \text{otherwise} \end{cases}$ $V_d = 3.59\,kip$

SIDL - traffic barrier $V_b := V_{ss}(w_b, L, d_c)$ $V_b = 8.88\,kip$

Shear due to structure dead load $V_{DC} := V_g + V_{sp} + V_d + V_b$ $V_{DC} = 127.42\,kip$

Distribution Factor (DF) Method for Shear on interior girder

Range of applicability (LRFD Table 4.6.2.2.3a-1), case k
- If Nb = 3, use lever rule for DF

Girder spacing check $chk_{13,1} := \text{if}(3.5 \cdot ft \leq S \leq 16.0 \cdot ft, "OK", "NG")$ $chk_{13,1} = "OK"$

Beam span check $chk_{13,2} := \text{if}(20 \cdot ft \leq L \leq 240 \cdot ft, "OK", "NG")$ $chk_{13,2} = "OK"$

Slab thickness check $chk_{13,3} := \text{if}(4.5 \cdot in \leq t_s \leq 12.0 \cdot in, "OK", "NG")$ $chk_{13,3} = "OK"$

Minimum beam count check $chk_{13,4} := \text{if}\left(N_b \geq 4, \text{"OK"}, \text{"NG"}\right)$ $chk_{13,4} = \text{"OK"}$

For two or more design lanes loaded $DF_{vi} := 0.2 + \frac{S}{12 \cdot ft} - \left(\frac{S}{35 \cdot ft}\right)^{2.0}$ $DF_{vi} = 0.7$

Distribution Factor (DF) Method for Shear on exterior girder

Range of applicability (LRFD Table 4.6.2.2.3b-1), case k
- If Nb = 3, use lever rule for DF

Check overhang $chk_{13,5} := \text{if}\left(-1.0 \cdot ft \leq overhang - cw \leq 5.5 \cdot ft, \text{"OK"}, \text{"NG"}\right)$ $chk_{13,5} = \text{"OK"}$

Dist from exterior of web of exterior beam to interior edge of curb $d_{e.v} := overhang - cw - 0.5 \cdot b_w$ $d_{e.v} = 29.9\,in$

Correction factor $e_{ve} := 0.6 + d_e \div (10.0 \cdot ft)$ $e_{ve} = 1.2$

DF for exterior girder $DF_{ve} := e_{ve} \cdot DF_{vi}$ $DF_{ve} = 0.9$

Increase in DF for Skewed Bridges (LRFD Table 4.6.2.2.3c-1, case k)

Note: Applied when the difference between skew angles of two adjacent lines of support < 10 deg.

Check on skew `angle` $chk_{13,6} := \text{if}\left(30 \cdot deg \leq \theta_{sk} \leq 60 \cdot deg, \text{"OK"}, \text{"NG"}\right)$ $chk_{13,6} = \text{"OK"}$

Check on girder spacing $chk_{13,7} := \text{if}\left(3.5 \cdot ft \leq S \leq 16.0 \cdot ft, \text{"OK"}, \text{"NG"}\right)$ $chk_{13,7} = \text{"OK"}$

Check on girder span $chk_{13,8} := \text{if}\left(20 \cdot ft \leq L \leq 240 \cdot ft, \text{"OK"}, \text{"NG"}\right)$ $chk_{13,8} = \text{"OK"}$

Check on girder count $chk_{13,9} := \text{if}\left(N_b \geq 4, \text{"OK"}, \text{"NG"}\right)$ $chk_{13,9} = \text{"OK"}$

Parameters for skew equation $SK_v := 1.0 + 0.20 \cdot \left[\left(L \cdot t_s^{\,3}\right) \div K_g\right]^{0.3} \cdot \tan\left(\theta_{sk}\right)$ $SK_v = 1.1$

Increased DF for shear $DF_v := \begin{cases} SK_v \cdot DF_{vi} & \text{if girder = "interior"} \\ SK_v \cdot DF_{ve} & \text{if girder = "exterior"} \end{cases}$ $DF_v = 0.8$

Shear force effect

LL shear at critical section $V_L := V_{LL} \cdot DF_v$ $V_L = 87.05\,kip$

Factored shear force effect $V_u := \eta \cdot \left(\gamma_p \cdot V_{DC} + \gamma_L \cdot V_L\right)$ $V_u = 311.62\,kip$

13.3 Shear design at critical section at end of girder

Shear stress on concrete (LRFD 5.8.2.9)

Component of PS in direction of applied shear; positive if resisting the shear

Angle of harped strands inclination $\alpha := \text{atan}\left(slope_h\right)$ $\alpha = 5.19\,deg$

Effective PS in harped strands $P_h := f_{pe} \cdot A_p \cdot N_h$ $P_h = 644.9\,kip$

Vert component of Eff PS in harp strnds

$$V_p := P_h \cdot \sin(\alpha)$$

$V_p = 58.35\,kip$

Stress in prestressing steel when the stress in the surrounding concrete is 0.0

$$f_{po} := \begin{cases} 0.7 \cdot f_{pu} & \text{if } d_c + P2 \geq D \\ \frac{d_c + P2}{D} \cdot (0.7 \cdot f_{pu}) & \text{otherwise} \end{cases}$$

$f_{po} = 189.0\,ksi$

External axial forces

$$N_u := 0.0 \cdot kip$$

Bending moment at critical shear section

Self-weight

$$M_{g.v} := M_{ss}(w_g, L, d_c)$$

$M_{g.v} = 371.7\,kip \cdot ft$

Pad and slab

$$M_{sp.v} := M_{ss}(w_{spu}, L, d_c)$$

$M_{sp.v} = 331\,kip \cdot ft$

Diaphragms load

$$M_{d.v} := V_d \cdot d_c$$

$M_{d.v} = 20.9\,kip \cdot ft$

SIDL - traffic barrier

$$M_{b.v} := M_{ss}(w_b, L, d_c)$$

$M_{b.v} = 54.3\,kip \cdot ft$

Dead load bending moment

$$M_{DC.v} := M_{g.v} + M_{sp.v} + M_{d.v} + M_{b.v}$$

$M_{DC.v} = 778\,kip \cdot f$

Live load bending moment corresponding to critical shear loading

$$M_{LL} := M_{v.LL}$$

$M_{LL} = 694.4\,kip \cdot ft$

Distributed live load

$$M_L := M_{LL} \cdot DF$$

$M_L = 401.58\,kip \cdot ft$

Factored bending moment for shear

$$M_u := \eta \cdot (\gamma_p \cdot M_{DC} + \gamma_L \cdot M_L)$$

$M_u = 6423\,kip \cdot ft$

Minimum value for shear design moment

$$M_{u.v} := \max(M_u, V_u \cdot d_v)$$

LRFD 5.8.3.4.2

$M_u = 6423\,kip \cdot ft$

Calculate longitudinal strain at member mid-depth

Area of prestressing steel on the flexural tension side of the member

$$A_{ps} := N_s \cdot A_p$$

LRFD Fig 5.8.3.4.2-3

$A_{ps} = 6.1\,in^2$

Area of non-prestressed reinforcing steel on the flexural tension side

$$A_s := 0.0 \cdot in^2$$

Area of concrete on the flexural tension side (LRFD Fig 5.8.3.4.2-1)

$$A_c := (b_{f.bot} - b_w) \cdot t_{f.bot} + b_w \cdot 0.5(d_g + t_s)$$

$A_c = 486.9\,in^2$

Calculated Longitudinal strain (LRFD 5.8.3.4.2; WSDOT Design Memo 6/18/01)

$$\varepsilon_{xx} := \frac{\frac{M_{u.v}}{d_v} + 0.5 \cdot N_u + (V_u - V_p) - A_{ps} \cdot f_{po}}{2 \cdot (E_s \cdot A_s + E_p \cdot A_{ps})}$$

$\varepsilon_{xx} = 5.98 \times 10^{-4}$

Design longitudinal strain

$$\varepsilon_x := \begin{cases} 0.001 & \text{if } \varepsilon_{xx} \geq 0.001 \\ \varepsilon_{xx} & \text{if } 0.000 \leq \varepsilon_{xx} < 0.001 \\ \varepsilon_{xx} \cdot \frac{2 \cdot (E_s \cdot A_s + E_p \cdot A_{ps})}{2 \cdot (E_c \cdot A_c + E_s \cdot A_s + E_p \cdot A_{ps})} & \text{otherwise} \end{cases}$$

$\varepsilon_x = 0.0$

Theta and beta factors for shear (LRFD 5.8.3.4.2)

Effective girder web width $b_v := b_w$ $b_v = 6.1\,in$

Shear stress on concrete $v_u := \frac{V_u - \phi_v \cdot V_p}{\phi_v \cdot b_v \cdot d_v}$ $v_u = 0.67\,ksi$

Stress ratio $SR := v_u \div f'_c$ $SR = 0.1$

(collapsible region containing θ and β LRFD Tables 5.8.3.4.2-1 and -2)

SR value for lookup function

$$SR_{temp} := \begin{cases} 0.075 & \text{if } 0 \le SR \le 0.075 \\ Ceil(SR, 0.025) & \text{if } 0.075 < SR \le 0.25 \\ 0.25 & \text{otherwise} \end{cases}$$ $SR_{temp} = 0.1$

Lookup row in θ and β tables $row := floor\left(match\left(SR_{temp}, row_{headers}\right)_1\right)$ $row = 2$

ε value for lookup function

$$\varepsilon_{x.temp} := \begin{cases} -0.20 & \text{if } \varepsilon_x \le -0.20 \\ -0.10 & \text{if } -0.20 < \varepsilon_x \le -0.10 \\ Ceil\left(\varepsilon_x, -0.05\right) & \text{if } -0.10 < \varepsilon_x \le 0 \\ Ceil\left(\varepsilon_x, 0.125\right) & \text{if } 0 < \varepsilon_x \le 0.25 \\ Ceil\left(\varepsilon_x, 0.25\right) & \text{if } 0.25 < \varepsilon_x \le 1 \\ 1.00 & \text{otherwise} \end{cases}$$ $\varepsilon_{x.temp} = 0.1$

Lookup column in θ and β tables $col := floor\left(match\left(\varepsilon_{x.temp}, col_{headers}\right)_1\right)$ $col = 5$

Angle of inclination of diagonal compressive stresses $\theta := Table583421\_\theta_{row,col}\,deg$ $\theta = 24.9\,deg$

Factor indicating ability of diagonally cracked concrete to transmit tension $\beta := Table583422\_\beta_{row,col}$ $\beta = 2.9$

Nominal Shear Resistance

Nominal shear resistance provided by tensile stress in concrete $V_c := 0.0316 \cdot \beta \cdot \sqrt{\frac{f'_c}{ksi}} \cdot ksi \cdot b_v \cdot d_v$ $V_c = 114.82\,kip$

Check if transverse reinforcement is required (LRFD 5.8.2.4)

$$V_{s.chk} := \begin{cases} \text{"Need Vs"} & \text{if } V_u > 0.5 \cdot \phi_v \cdot \left(V_c + V_p\right) \\ \text{"No Vs Needed"} & \text{otherwise} \end{cases}$$ $V_{s.chk} = \text{"Need}$

Area of single shear steel bar $A_v := A_{bbar_v}$ $A_v = 0.3\,in^2$

Start with standard stirrup spacing in BDM 5-A, use spacing of section at d.c (modify if not adequate)

$$s := \begin{cases} s1_v & \text{if } 0 < d_c \le l1_v \\ s2_v & \text{if } l1_v < d_c \le \left(l1_v + l2_v\right) \\ s3_v & \text{if } \left(l1_v + l2_v\right) < d_c \le \left(l1_v + l2_v + l3_v\right) \end{cases}$$ $s = 4.5\,in$

Nominal shear resistance provided by transverse reinforcement (LRFD 5.8.3.3)

$$V_s := \frac{A_v \cdot f_y \cdot d_v \cdot \cot(\theta)}{s} \qquad V_s = 622.7\,\text{kip}$$

Design shear resistance

$$V_n := \min\left(\begin{pmatrix} V_c + V_s + V_p \\ 0.25 \cdot f'_c \cdot b_v \cdot d_v + V_p \end{pmatrix}\right) \qquad V_n = 795.8\,\text{kip}$$

Check adequacy in shear

$\phi_v \cdot V_n = 716.3\,\text{kip}$ $\quad V_u = 311.6\,\text{kip}$

$$chk_{13,10} := \text{if}\left(\phi_v \cdot V_n \geq V_u, \text{"OK"}, \text{"NG"}\right) \qquad chk_{13,10} = \text{"OK"}$$

Limits on Transverse Reinforcement

Min shear reinforcement (LRFD 5.8.2.5)

$$A_{v.min} := 0.0316 \cdot \sqrt{\frac{f'_c}{\text{ksi}}} \cdot \text{ksi} \cdot \frac{b_v \cdot s}{f_y} \qquad A_{v.min} = 0.0\,\text{in}^2$$

Check min reinf limit

$$chk_{13,11} := \text{if}\left(A_v \geq A_{v.min}, \text{"OK"}, \text{"NG"}\right) \qquad chk_{13,10} = \text{"OK"}$$

Max shear reinf spacing (LRFD 5.8.2.7)

$$s_{max} := \begin{cases} \min(0.8 d_v, 24\text{in}) & \text{if } v_u < 0.125 \cdot f'_c \\ \min(0.4 d_v, 12\text{in}) & \text{otherwise} \end{cases} \qquad s_{max} = 24.0\,\text{in}$$

Check max spacing

$$chk_{13,12} := \text{if}\left(s > s_{max}, \text{"NG"}, \text{"OK"}\right) \qquad chk_{13,12} = \text{"OK"}$$

If s > s.max, reassign s = s.max

$$s := \min(s, s_{max}) \qquad s = 4.5\,\text{in}$$

Longitudinal Reinforcement at Critical Section (LRFD 5.8.3.5)

Check if strands are fully developed at critical shear section (LRFD 5.8.3.5)

$$m_d := \text{if}\left(\frac{d_c + P2}{D} \geq 1, 1, \frac{d_c + P2}{D}\right) \qquad m_d = 1.0$$

Transverse steel nominal strength

$$V_{sc} := \min\left(V_s, V_u \div \phi_v\right) \qquad V_{sc} = 346.2\,\text{kip}$$

Minimum longitudinal reinf on tensile side (LRFD 5.8.3.5-2)

$$Af_{min} := \left(\frac{V_u}{\phi_v} - 0.5 \cdot V_{sc} - m_d \cdot V_p\right) \cdot \cot(\theta) \qquad Af_{min} = 247.3\,\text{kip}$$

PS strength at critical shear section

$$Af_{ps} := A_{ps} \cdot f_{ps} \cdot m_d \qquad Af_{ps} = 1428.2\,\text{kip}$$

Check minimum longitudinal steel

$$chk_{13,13} := \text{if}\left(Af_{ps} \geq Af_{min}, \text{"OK"}, \text{"NG"}\right) \qquad chk_{13,13} = \text{"OK"}$$

Area of longitudinal steel required if PS not adequate

$$A_{s.v} := \text{if}\left[Af_{ps} \geq Af_{min}, 0.0\text{in}^2, \frac{\left(Af_{min} - Af_{ps}\right)}{f_y}\right] \qquad A_{s.v} = 0.0\,\text{in}^2$$

13.4 Shear Design and Longitudinal Reinforcement at Harping Point

Shear at harping point

Girder dead load

$$V_{gh} := V_{ss}\left(w_g, L, x_h\right) \qquad V_{gh} = 13.41\,\text{kip}$$

Slab+pad dead load

$$V_{sph} := V_{ss}\left(w_{spu}, L, x_h\right) \qquad V_{sph} = 11.95\,\text{kip}$$

Diaphragm loads $x_h \div L = 0.4$

$$V_{dh} := \begin{cases} 0.5 \cdot P & \text{if } n_{diaph} = 3 \\ 0 \cdot P & \text{if } n_{diaph} = 2 \\ 0.5 \cdot P & \text{if } n_{diaph} = 1 \\ 0 \cdot kip & \text{otherwise} \end{cases} \qquad V_{dh} = 1.2\,kip$$

SIDL - traffic barrier $V_{bh} := V_{ss}(w_b, L, x_h)$ $V_{bh} = 1.96\,kip$

Shear due to structure dead load $V_{DCh} := V_{gh} + V_{sph} + V_{dh} + V_{bh}$ $V_{DCh} = 28.51\,kip$

LL shear at harping point $V_{Lh} := V_{LL.h} \cdot DF_v$ $V_{Lh} = 41.37\,kip$

Factored shear force effect $V_{uh} := \eta \cdot (\gamma_p \cdot V_{DCh} + \gamma_L \cdot V_{Lh})$ $V_{uh} = 108.03\,kip$

Shear stress on concrete

Stress in prestressing steel when the stress in the surrounding concrete is 0.0 $f_{poh} := 0.7 \cdot f_{pu}$ $f_{poh} = 189.0\,ksi$

Vertical component of prestress force $V_{ph} := 0kip$

External axial forces $N_{uh} := 0.0 \cdot kip$

Bending moment at Harping point

Dead load bending moment (critical case) $M_{DCh} := M_{gh} + M_{sp.h} + M_{dh} + M_{bh}$ $M_{DCh} = 4383\,kip \cdot f$

Factored bending moment for shear $M_{uh} := \eta \cdot (\gamma_p \cdot M_{DCh} + \gamma_L \cdot M_{Lh})$ $M_{uh} = 9453\,kip \cdot ft$

Minimum value for shear design moment $M_{u.vh} := \max(M_{uh}, V_{uh} \cdot d_v)$ LRFD 5.8.3.4.2 $M_{uh} = 9453\,kip \cdot ft$

Calculate longitudinal strain at member mid-depth

Area of prestressing steel on the flexural tension side of the member $A_{psh} := N_p \cdot A_p$ LRFD Fig 5.8.3.4.2-3 $A_{psh} = 10.0\,in^2$

Area of non-prestressed reinforcing steel on the flexural tension side $A_{sh} := 0.0 \cdot in^2$

Area of concrete on the flexural tension side (LRFD Fig 5.8.3.4.2-1) $A_{ch} := A_c$ $A_{ch} = 486.9\,in^2$

Calculated Longitudinal strain (LRFD 5.8.3.4.2; WSDOT Design Memo 6/18/01)

$$\varepsilon_{xxh} := \frac{\frac{M_{u.vh}}{d_v} + 0.5 \cdot N_{uh} + (V_{uh} - V_{ph}) - A_{psh} \cdot f_{poh}}{2 \cdot (E_s \cdot A_{sh} + E_p \cdot A_{psh})} \qquad \varepsilon_{xxh} = -2.7478 \times 10^{-4}$$

Design longitudinal strain

$$\varepsilon_{xh} := \begin{cases} 0.001 & \text{if } \varepsilon_{xxh} \geq 0.001 \\ \varepsilon_{xxh} & \text{if } 0.000 \leq \varepsilon_{xxh} < 0.001 \\ \varepsilon_{xxh} \cdot \frac{2 \cdot (E_s \cdot A_{sh} + E_p \cdot A_{psh})}{2 \cdot (E_c \cdot A_{ch} + E_s \cdot A_{sh} + E_p \cdot A_{psh})} & \text{otherwise} \end{cases} \qquad \varepsilon_{xh} = -2.4870 \times 10^{-4}$$

Theta and beta factors for shear (LRFD 5.8.3.4.2)

Shear stress on concrete

$$v_{uh} := \frac{V_{uh} - \phi_v \cdot V_{ph}}{\phi_v \cdot b_v \cdot d_v} \qquad v_{uh} = 0.28\,\text{ksi}$$

Stress ratio

$$SR_h := v_{uh} \div f'_c \qquad SR_h = 0.0$$

SR value for lookup function

$$SR_{temph} := \begin{cases} 0.075 & \text{if } 0 \le SR_h \le 0.075 \\ \text{Ceil}(SR_h, 0.025) & \text{if } 0.075 < SR_h \le 0.25 \\ 0.25 & \text{otherwise} \end{cases} \qquad SR_{temph} = 0.075$$

Lookup row in θ and β tables

$$row_h := \text{floor}(\text{match}(SR_{temph}, row_{headers})_1) \qquad row_h = 1$$

ε value for lookup function

$$\varepsilon_{x.temph} := \begin{cases} -0.20 & \text{if } \varepsilon_{xh} \le -0.20 \\ -0.10 & \text{if } -0.20 < \varepsilon_{xh} \le -0.10 \\ \text{Ceil}(\varepsilon_{xh}, -0.05) & \text{if } -0.10 < \varepsilon_{xh} \le 0 \\ \text{Ceil}(\varepsilon_{xh}, 0.125) & \text{if } 0 < \varepsilon_{xh} \le 0.25 \\ \text{Ceil}(\varepsilon_{xh}, 0.25) & \text{if } 0.25 < \varepsilon_{xh} \le 1 \\ 1.00 & \text{otherwise} \end{cases} \qquad \varepsilon_{x.temph} = 0.0$$

Lookup column in θ and β tables

$$col_h := \text{floor}(\text{match}(\varepsilon_{x.temph}, col_{headers})_1) \qquad col_h = 4$$

Angle of inclination of diagonal compressive stresses

$$\theta_h := \text{Table583421\_}\theta_{row_h, col_h}\,\text{deg} \qquad \theta_h = 21.8\,\text{deg}$$

Factor indicating ability of diagonally cracked concrete to transmit tension

$$\beta_h := \text{Table583422\_}\beta_{row_h, col_h} \qquad \beta_h = 3.8$$

Nominal Shear Resistance

Nominal shear resistance provided by tensile stress in concrete

$$V_{ch} := 0.0316 \cdot \beta_h \cdot \sqrt{\frac{f'_c}{\text{ksi}}} \cdot \text{ksi} \cdot b_v \cdot d_v \qquad V_{ch} = 147.97\,\text{kip}$$

Check if transverse reinforcement is required (LRFD 5.8.2.4)

$$V_{sh.chk} := \begin{cases} \text{"Need Vs"} & \text{if } V_{uh} > 0.5 \cdot \phi_v \cdot (V_{ch} + V_{ph}) \\ \text{"No Vs Needed"} & \text{otherwise} \end{cases} \qquad V_{sh.chk} = \text{"Need V}$$

Area of single shear steel bar

$$A_{vh} := A_v \qquad A_v = 0.3\,\text{in}^2$$

Start with standard stirrup spacing in BDM 5-A, use spacing of section at d.c (modify if not adequate)

$$s_h := \begin{cases} s1_v & \text{if } 0 < x_h \le l1_v \\ s2_v & \text{if } l1_v < x_h \le (l1_v + l2_v) \\ s3_v & \text{if } (l1_v + l2_v) < x_h \le (l1_v + l2_v + l3_v) \\ s4_v & \text{if } (l1_v + l2_v + l3_v) < x_h \le (l1_v + l2_v + l3_v + l4_v) \\ s5_v & \text{otherwise} \end{cases} \qquad s_h = 12.0\,\text{in}$$

Nominal shear resistance provided by transverse reinforcement (LRFD 5.8.3.3)

$$V_{sh} := \frac{A_{vh} \cdot f_y \cdot d_v \cdot \cot(\theta)}{s_h} \qquad V_{sh} = 233.5\,\text{kip}$$

Design shear resistance

$$V_{nh} := \min\left(\begin{pmatrix} V_{ch} + V_{sh} + V_{ph} \\ 0.25 \cdot f'_c \cdot b_v \cdot d_v + V_{ph} \end{pmatrix}\right) \qquad V_{nh} = 381.5\,\text{kip}$$

Check adequacy in shear

$\phi_v \cdot V_{nh} = 343.3\,\text{kip}$ $\qquad V_{uh} = 108.0\,\text{kip}$

$$chk_{13,14} := \text{if}\left(\phi_v \cdot V_{nh} \geq V_{uh}, \text{"OK"}, \text{"NG"}\right) \qquad chk_{13,14} = \text{"OK"}$$

Limits on Transverse Reinforcement

Min shear reinforcement (LRFD 5.8.2.5)

$$A_{vh.min} := 0.0316 \cdot \sqrt{\frac{f'_c}{\text{ksi}}} \cdot \text{ksi} \cdot \frac{b_v \cdot s_h}{f_y} \qquad A_{vh.min} = 0.11\,\text{in}^2$$

Check min reinf limit

$$chk_{13,15} := \text{if}\left(A_{vh} \geq A_{vh.min}, \text{"OK"}, \text{"NG"}\right) \qquad chk_{13,15} = \text{"OK"}$$

Max shear reinf spacing (LRFD 5.8.2.7)

$$s_{h.max} := \begin{cases} \min(0.8d_v, 24\text{in}) & \text{if } v_{uh} < 0.125 \cdot f'_c \\ \min(0.4d_v, 12\text{in}) & \text{otherwise} \end{cases} \qquad s_{h.max} = 24.0\,\text{in}$$

Check max spacing

$$chk_{13,16} := \text{if}\left(s_h > s_{h.max}, \text{"NG"}, \text{"OK"}\right) \qquad chk_{13,16} = \text{"OK"}$$

If s > s.max, reassign s = s.max

$$s_h := \min(s_h, s_{h.max}) \qquad s_h = 12.0\,\text{in}$$

Longitudinal Reinforcement at Critical Section (LRFD 5.8.3.5)

Transverse steel nominal strength

$$V_{sch} := \min(V_{sh}, V_{uh} \div \phi_v) \qquad V_{sch} = 120.0\,\text{kip}$$

Minimum longitudinal reinf on tensile side (LRFD 5.8.3.5-1)

$$Af_{h.min} := \frac{M_{u.vh}}{d_v \cdot \phi_f} + \left(\frac{V_{uh}}{\phi_v} - 0.5 \cdot V_{sch}\right) \cdot \cot(\theta_h) \qquad Af_{h.min} = 1772.3\,\text{k}$$

PS strength at critical shear section

$$Af_{psh} := A_{psh} \cdot f_{ps} \qquad Af_{psh} = 2346.3\,\text{kip}$$

Check minimum longitudinal steel

$$chk_{13,17} := \text{if}\left(Af_{psh} \geq Af_{h.min}, \text{"OK"}, \text{"NG"}\right) \qquad chk_{13,17} = \text{"OK"}$$

Area of longitudinal steel required if PS not adequate

$$A_{s.vh} := \text{if}\left[Af_{psh} \geq Af_{h.min}, 0.0\text{in}^2, \frac{\left(Af_{h.min} - Af_{psh}\right)}{f_y}\right] \qquad A_{s.vh} = 0.00\,\text{in}^2$$

13.5 Pretension Anchorage Zone

Check Jacking Force In Service

Jacking force (add force for pre-release relaxation)

$$P_j := f_{pj} \cdot N_p \cdot A_p \qquad P_j = 2021\,\text{kip}$$

Permanent dead reaction at bearing

$$V_{DC.spt} := w_g \cdot GL \div 2 \qquad V_{DC.spt} = 68.3\,\text{kip}$$

Check jacking force minimum (LRFD 3.4.3)

$$chk_{13,18} := \text{if}\left(P_j \geq 1.3 \cdot V_{DC.spt}, \text{"OK"}, \text{"NG"}\right) \qquad chk_{13,18} = \text{"OK"}$$

Factored Bursting Resistance Pr (LRFD 5.10.10.1; WSDOT Design Memorandum 6/18/01)

Length of beam for end vertical steel spacing

$$ll_v = 1.5\,\text{in}$$

End vertical steel spacing $s1_v = 1.5\,in$

Overall depth of precast member $h := d_g$

Distance from end contributing to burst resistance $l_{burst} := h \div 4$ $l_{burst} = 18.5\,in$

Check minimum end spacing $chk_{13,19} := if\left(s1_v \le l_{burst}, "OK", "NG"\right)$ $chk_{13,19} = "OK"$

End stirrup bar size $bar_{v1} := bar_v$ $bar_{v1} = 5.0$

Area of one vertical end stirrup $A_{v1} := 2 \cdot A_{b_{bar_{v1}}}$ $A_{v1} = 0.6\,in^2$

Total area of reinforcement located within l.burst $A_{s.burst} := A_{v1} \cdot floor\left(l_{burst} \div s1_v\right)$ $A_{s.burst} = 7.4\,in^2$

Maximum stress in steel $f_s := 20ksi$

Minimum resistance from end vertical steel $P_{r.min} := 0.04 \cdot f_{pj} \cdot A_{pstemp}$ $P_{r.min} = 91.4\,kip$

Required minimum spacing of vertical steel at ends

$$s1_v := \begin{cases} s1_v & \text{if } A_{s.burst} \cdot f_s \ge P_{r.min} \\ Ceil\left[l_{burst} \div \left(\frac{P_{r.min}}{A_{v1} \cdot f_s}\right), 0.25in\right] & \text{otherwise} \end{cases} \qquad 1.5\,in$$

Confinement Reinforcement (LRFD 5.10.10.2)

Note: from the end of the beams, the reinforcement shall not be less than #3 deformed bars, with spacing not exceeding 6", and sl enclose the strands in the bottom flange.

Minimum length of PS confinement in bottom flange $l_{confine} := 1.5 \cdot d_g$ $l_{confine} = 9.2\,ft$

14. Lifting, Shipping, and General Stability

14.1 Lifting

Pick location and dead load bending moment

Impact during the lifting stage $IM_l := 0\%$ BDM 5.6.2 C.2. $IM_l = 0.0\,\%$

Choose pick point from the end of girder $x_L := 15ft$ $x_L = 15.0\,ft$

Moment due to weight of girder at support $M_{g.l.s} := w_g \cdot x_L^{\,2} \div 2$ $M_{g.l.s} = 115.6\,kip\cdot ft$

Moment due to weight of girder at harping point $M_{g.l.h} := M_{ss}\left(w_g, GL - 2\cdot x_L, x_h - x_L\right) - M_{g.l.s}$ $M_{g.l.h} = 1138.0\,kip\cdot ft$

Stress in girder at harping point

Lifting stress at bottom of girder at harping point $f_{bg.l} := \frac{M_{g.l.h}}{S_{bg}} - \frac{P_{si}}{A_g} + \frac{-P_{sis}\cdot e_s - P_{sih}\cdot e_h + P_{sit}\cdot e_{temp}}{S_{bg}}$ $f_{bg.l} = -4.$

Check bottom stress at harping point $chk_{14,1} := if\left(f_{bg.l} \geq f_{s.SH.i.lim}, "OK", "NG"\right)$ $chk_{14,1} = "OK"$

Lifting stress at top of girder at harping point $f_{tg.l} := -\frac{M_{g.l.h}}{S_{tg}} - \frac{P_{si}}{A_g} + \frac{P_{sis}\cdot e_s + P_{sih}\cdot e_h - P_{sit}\cdot e_{temp}}{S_{tg}}$ $f_{tg.l} = -$

Check top stress at harping point $chk_{14,2} := if\left(f_{tg.l} \leq f_{t.i.lim}, "OK", "NG"\right)$ $chk_{14,2} = "OK"$

Stress in girder at support

Harped strand eccentricity at support (upward if positive) $e_{h.s} := Y_{tg} - F_o - slope_h\cdot x_L$ $e_{h.s} = 10.0\,in$

Lifting stress at bottom of girder at support $f_{bg.s} := \frac{M_{g.l.s}}{S_{bg}} - \frac{P_{si}}{A_g} + \frac{-P_{sis}\cdot e_s + P_{sih}\cdot e_{h.s} + P_{sit}\cdot e_{temp}}{S_{bg}}$ $f_{bg.s} = -3.2\,ksi$

Check bottom stress at support $chk_{14,3} := if\left(f_{bg.s} \geq f_{s.SH.i.lim}, "OK", "NG"\right)$ $chk_{14,3} = "OK"$

Lifting stress at top of girder at support $f_{tg.s} := -\frac{M_{g.l.s}}{S_{tg}} - \frac{P_{si}}{A_g} + \frac{P_{sis}\cdot e_s - P_{sih}\cdot e_{h.s} - P_{sit}\cdot e_{temp}}{S_{tg}}$ $f_{tg.s} = -1.25\,ksi$

Check top stress at support $chk_{14,4} := if\left(f_{tg.l} \leq f_{t.i.lim}, "OK", "NG"\right)$ $chk_{14,4} = "OK"$

Girder Stability During Lifting

References

1. PG Super Theoretical Manual - Lifting of Long Prestressed Girders
2. PCI Journal, Jul-Aug 1998, New Deep WSDOT STandard Sections Extend Spans of Prestressed Concrete Girder Bridges)
3. BDM 5.6.3-C.2

Initial eccentricity of the c.g. from the roll axis $e_i := 0.25in$ $e_i = 0.3\,in$

Vertical distance from the roll center to the c.g. $y_r := Y_{tg}$ $y_r = 38.4\,in$

Initial roll angle of a rigid beam $\theta_i := e_i \div y_r$ $\theta_i = 0.0\,rad$

Weak-axis Iy from PGSuper $I_y := 72374in^4$

Length of girder between lift points $L_l := GL - 2 \cdot x_L$ $L_l = 103.0\,ft$

Theoretical deflection at the girder c.g. assuming full weight is applied about the weak axis $z_o := \frac{w_g}{12 \cdot E_{ci} \cdot I_y \cdot GL} \cdot \left(\frac{1}{10} \cdot L_l^5 - x_L^2 \cdot L_l^3 + 3 \cdot x_L^4 \cdot L_l + \frac{6}{5} \cdot x_L^5 \right)_o$ $= 2.6\,in$

Roll angle of major axis of beam w.r.t vertical $\theta := \theta_i \cdot \left[1 \div \left(1 - z_o \div y_r \right) \right]$ $\theta = 0.0\,rad$

Lateral bending moment to cause cracking $M_{lat} := 2 \cdot \left(f_r + f_{tg.l} \right) \cdot I_y \div b_f$ $M_{lat} = 63.8\,kip \cdot ft$

Tilt angle at cracking $\theta_{max} := M_{lat} \div M_{g.l.h}$ $\theta_{max} = 0.1\,rad$

Factor of Safety against cracking during lifting $FS_{cr.l} := \left(z_o \div y_r + \theta_i \div \theta_{max} \right)^{-1}$ $FS_{cr.l} = 5.4$

Effective theoretical deflection $z'_o := z_o \cdot \left(1 + 2.5 \cdot \theta \right)$

Maximum tilt angle at which the maximum FS occurs $\theta'_{max} := \sqrt{e_i \div \left(2.5 \cdot z_o \right)}$ $\theta'_{max} = 0.2\,rad$

Maximum Factor of Safety against failure $FS_f := \frac{y_r \cdot \theta'_{max}}{z'_o \cdot \theta'_{max} + e_i}$ $FS_f = 9.8$

Factor of Safety during lifting $FS_{lift} := \min\left(FS_{cr.l}, FS_f \right)$ $FS_{lift} = 5.4$

Check lifting $chk_{14,5} := \text{if}\left(FS_{lift} > 1.0, \text{"OK"}, \text{"NG"} \right)$ $chk_{14,5} = \text{"OK"}$

14.2 Shipping

Girder weight limit for truck shipping

Total weight $W_{g.tot} := wt \cdot GL$ $W_{g.tot} = 135.7\,kip$

Check allowable shipping weight (BDM 5.6.3 D.3) $chk_{14,6} := \text{if}\left(W_{g.tot} \le 180kip, \text{"OK"}, \text{"NG"} \right)$ $chk_{14,6} = \text{"OK"}$

Support location and dead load bending moment

Choose distance from end to support $x_S := 2ft$ Std Spec 6-02.3(25)M $x_S = 2.0\,ft$

Moment due to weight of girder at shipping support $M_{g.SH.s} := w_g \cdot x_S^2 \div 2$ $M_{g.SH.s} = 2.1\,kip \cdot$

Moment due to weight of girder at harping point $M_{g.SH.h} := M_{ss}\left(w_g, GL - 2 \cdot x_S, x_h - x_S \right) - M_{g.SH.s}$ $M_{g.SH.h} = 2026.1$

Prestress Forces

Prestress loss 1-4 months (temporary) $\Delta f_{PTSH} := 0.75 \cdot \Delta f_{pT}$ BDM 5.1.4 D $\Delta f_{PTSH} = -28.0\,ks$

Total prestress force during shipping $P_{SH} := A_{pstemp} \cdot \left(f_{pj} + \Delta f_{PTSH} \right)$ $P_{SH} = 1968.6\,kip$

Prestress force in straight strands during shipping $P_{ss} := N_s \cdot A_p \cdot \left(f_{pj} + \Delta f_{PTSH} \right)$ $P_{ss} = 1060.0\,kip$

Prestress force in harped strands during shipping $P_{sh} := N_h \cdot A_p \cdot \left(f_{pj} + \Delta f_{PTSH} \right)$ $P_{sh} = 681.4\,kip$

Prestress force in straight strands during shipping $P_{st} := N_t \cdot A_p \cdot \left(f_{pj} + \Delta f_{PTSH}\right)$ $P_{st} = 227.1\,kip$

Stresses in girder during shipping

Two possible shipping conditions:
I. 20% Impact, up or down, during shipping BDM 5.6.2 C.2 (vertical stability)
II. 6% superelevation of road (lateral stability)

Impact during the lifting stage $IM_{SH} := 20\%$ BDM 5.6.2 C.2. $IM_{SH} = 20.0\,\%$

Maximum expected roadway superelevation $se := 6\%$ BDM 5.6.3 D.6 $se = 0.1$

Stress at bottom of girder due to total prestress (include DL for total stress) $f_{ps.bg} := -\frac{P_{SH}}{A_g} + \frac{-P_{ss} \cdot e_s - P_{sh} \cdot e_h + P_{st} \cdot e_{temp}}{S_{bg}}$ $f_{ps.bg} = -4.5\,ksi$

Stress at top of girder due to total prestress (include DL for total stress) $f_{ps.tg} := -\frac{P_{SH}}{A_g} + \frac{P_{ss} \cdot e_s + P_{sh} \cdot e_h - P_{st} \cdot e_{temp}}{S_{bg}}$ $f_{ps.tg} = 0.2\,ksi$

Condition I.

At bottom of girder at shipping (impact up) $f_{bg.IM.u} := \frac{\left(1 - IM_{SH}\right) \cdot M_{g.SH.h}}{S_{bg}} + f_{ps.bg}$ $f_{bg.IM.u} = -3.5\,ksi$

Check stress at bottom of girder $chk_{14,7} := \text{if}\left(f_{bg.IM.u} > f_{s.SH.lim}, \text{"OK"}, \text{"NG"}\right)$ $chk_{14,7} = \text{"OK"}$

At bottom of girder at shipping (impact down) $f_{bg.IM.d} := \frac{\left(1 + IM_{SH}\right) \cdot M_{g.SH.h}}{S_{bg}} + f_{ps.bg}$ $f_{bg.IM.d} = -3.0\,ksi$

Check stress at bottom of girder $chk_{14,8} := \text{if}\left(f_{bg.IM.d} > f_{s.SH.lim}, \text{"OK"}, \text{"NG"}\right)$ $chk_{14,8} = \text{"OK"}$

At top of girder at shipping (impact up) $f_{tg.IM.u} := \frac{-\left(1 - IM_{SH}\right) \cdot M_{g.SH.h}}{S_{tg}} + f_{ps.tg}$ $f_{tg.IM.u} = -0.8\,ksi$

Check stress at top of girder $chk_{14,9} := \text{if}\left(f_{tg.IM.u} < f_{t.lim}, \text{"OK"}, \text{"NG"}\right)$ $chk_{14,9} = \text{"OK"}$

At top of girder at shipping (impact down) $f_{tg.IM.d} := \frac{-\left(1 + IM_{SH}\right) \cdot M_{g.SH.h}}{S_{tg}} + f_{ps.tg}$ $f_{tg.IM.d} = -1.3\,ksi$

Check stress at top of girder $chk_{14,10} := \text{if}\left(f_{tg.IM.d} < f_{t.lim}, \text{"OK"}, \text{"NG"}\right)$ $chk_{14,10} = \text{"OK"}$

$f_{t.lim} = 0.6\,ksi$

Condition II.

Angle of beam inclination due to superelevation $\theta_{se} := 90deg - \text{atan}(se)$ $\theta_{se} = 86.6\,deg$

Stress at uphill bottom flange during shippin $f_{bg.se} := f_{ps.bg} + \frac{\sin\left(\theta_{se}\right) \cdot M_{g.SH.h}}{S_{bg}} - \frac{\cos\left(\theta_{se}\right) \cdot M_{g.SH.h} \cdot b_{f.bot}}{2 \cdot I_y}$

$f_{bg.se} = -3.7\,ksi$

Check stress at uphill bottom flange during shipping $chk_{14,11} := \text{if}\left(f_{bg.se} \geq f_{s.SH.lim}, \text{"OK"}, \text{"NG"}\right)$ $chk_{14,11} = \text{"OK"}$

Stress at downhill top flange during shipping $f_{tg.se} := f_{ps.tg} - \frac{\sin(\theta_{se}) \cdot M_{g.SH.h}}{S_{bg}} + \frac{\cos(\theta_{se}) \cdot M_{g.SH.h} \cdot b_f}{2 \cdot I_y}$

$f_{tg.se} = -0.2\,\text{ksi}$

Check stress at downhill top flange during shipping $chk_{14,12} := \text{if}(f_{tg.se} \le f_{t.lim}, \text{"OK"}, \text{"NG"})$ $chk_{14,12} = \text{"OK"}$

Note: If these checks fail, design mild longitudinal steel to take this load

15. Deflection and Camber

Camber Details

PGSuper Figure

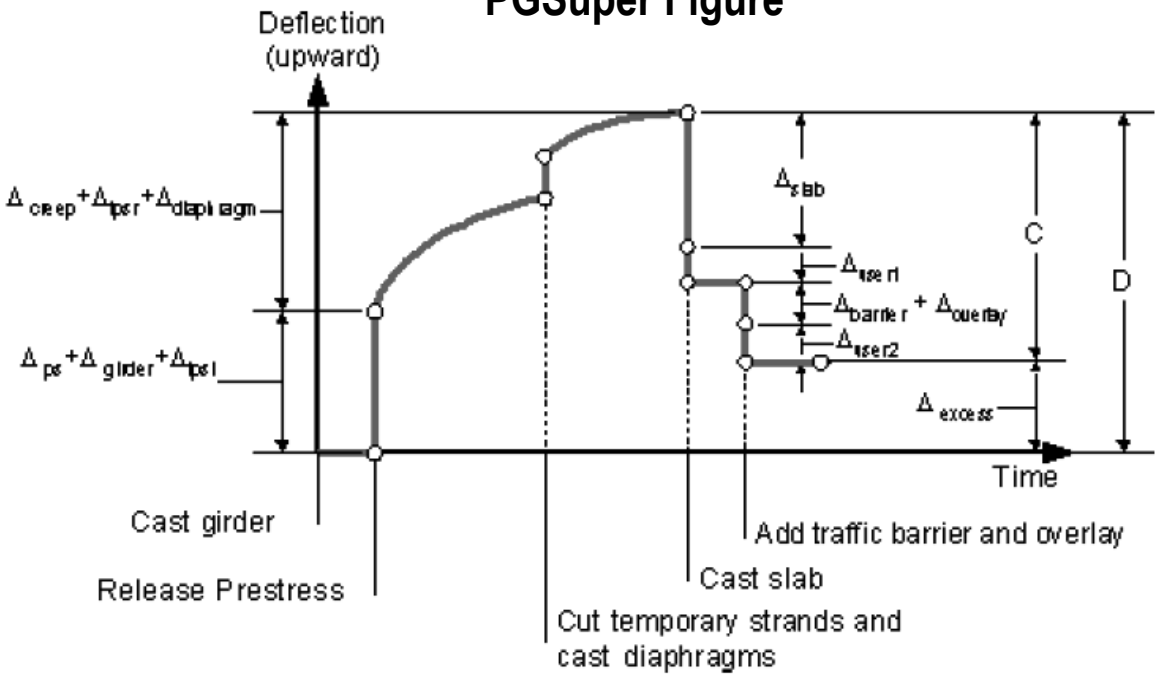

15.1 Camber Induced by Prestress at Transfer (BDM 5.2.6, LRFD 5.7.3.6.2)

Notes:
1. Calculate by moment area method.
2. Positive bending moment induces camber; positive deflection is defined upward (in direction of camber).

Bending moment induced by harped strands

C.g. of girder to CL of harped strands	$e_1 := Y_{tg} - F_o$	$e_1 = 26.4\,in$
Bending moment at end of girder	$M_a := -p_{st}\cdot A_p\cdot N_h\cdot e_1$	$M_a = -1601\,kip\cdot ft$
Bending moment at harping point	$M_b := p_{st}\cdot A_p\cdot N_h\cdot e_h$	$M_b = 1919\,kip\cdot ft$

Moment induced by straight/temporary strands

Constant bending moment due to straight strands	$M_{sc} := p_{st}\cdot A_p\cdot N_s\cdot e_s$	$M_{sc} = 3092\,kip\cdot ft$
Constant bending moment due to temp strands	$M_{tc} := -p_{st}\cdot A_p\cdot N_t\cdot e_{temp}$	$M_{tc} = -736\,kip\cdot ft$
Constant moment before release of temp strands	$M_c := M_{sc} + M_{tc}$	$M_c = 2356.6\,kip\cdot ft$

Total bending moment from prestress at transfer (permanent strands only)

Bending moment at harping point	$M_1 := M_{sc} + M_b$	$M_1 = 5011\,kip\cdot ft$
Bending moment at end of girder	$M_2 := M_{sc} + M_a$	$M_2 = 1492\,kip\cdot ft$

Camber due to prestress (elastic deflections)

Due to permanent strands, immediately after transfer, (includes elastic shortening of concrete from p.st)

$$C_{ps} := \frac{L^2}{8 \cdot E_{ci} \cdot I_g} \cdot \left[M_1 + \frac{M_2 - M_1}{3} \cdot \left(\frac{2 \cdot x_h}{GL} \right)^2 \right] \qquad C_{ps} = 3.86\,in$$

Due to temporary strands

$$C_{tps} := -\left(\frac{L^2}{8 \cdot E_{ci} \cdot I_g} \right) \cdot \left(-M_{tc} \right) \qquad C_{tps} = -0.66\,in$$

Due to permanent strands at release of temp strands

$$C_{ps.tr} := \left(\frac{L^2}{8 \cdot E_c \cdot I_g} \right) \cdot \left(-M_{tc} \right) \qquad C_{ps.tr} = 0.62\,in$$

15.2 Deflection due to Dead Load (Upward Camber is Positive)

Deflection of noncomposite section at midpsan

Due to girder dead load

$$\Delta_g := \left(-5 \cdot w_g \cdot L^4 \right) \div \left(384 \cdot E_{ci} \cdot I_g \right) \qquad \Delta_g = -1.63\,in$$

Due to slab+pad load

$$\Delta_{sp} := \left(-5 \cdot w_{spu} \cdot L^4 \right) \div \left(384 \cdot E_c \cdot I_g \right) \qquad \Delta_{sp} = -1.36\,in$$

Deflection coefficient from AISC 3rd Ed, Table 5-16

$$e_{coeff} := \begin{cases} 0.063 & \text{if } n_{diaph} \geq 4 \\ 0.050 & \text{if } n_{diaph} = 3 \\ 0.036 & \text{if } n_{diaph} = 2 \\ 0.021 & \text{if } n_{diaph} = 1 \\ 0 & \text{otherwise} \end{cases} \qquad e_{coeff} = 0.050$$

Due to diaphragm load

$$\Delta_d := \left(-e_{coeff} \cdot P \cdot L^3 \right) \div \left(E_c \cdot I_g \right) \qquad \Delta_d = -0.11\,in$$

Deflection of composite section

SIDL

$$\Delta_b := \left(-5 \cdot w_b \cdot L^4 \right) \div \left(384 \cdot E_c \cdot I_c \right) \qquad \Delta_b = -0.14\,in$$

15.3 Concrete Creep (LRFD 5.4.2.3.2)

Note: 1 day of accelerated curing is treated as 7 days for concret creep (LRFD 5.4.2.3.2)

Volume-to-surface ratio

$$VS_r := 3.18 \qquad \text{(BDM Table 5-62)}$$

Factor for the effect of volume-surface area ratio

$$k_{vs} := \max\left(1.45 - 0.13 \cdot VS_r, 1.0 \right) \qquad k_{vs} = 1.0$$

Humidity factor

$$k_{hc} := 1.56 - 0.008 \cdot (H \div \%) \qquad k_{hc} = 1.0$$

Concrete strength factor

$$k_f(f) := 5 \div (1 + f \div ksi) \qquad k_f\left(f'_{ci} \right) = 0.6$$

Time development factor

$$k_{td}(t, f) := t \div [61 - 4 \cdot (f \div ksi) + t] \qquad k_{td}\left(120, f'_{ci} \right) = 0.8$$

Creep coefficient

$$\psi_{cr}\left(f, t_i, t \right) := 1.9 \cdot k_{vs} \cdot k_{hc} \cdot k_f(f) \cdot k_{td}(t, f) \cdot t_i^{-0.118} \qquad \psi_{cr}\left(f'_{ci}, 7, 120 \right) = 0$$

15.4 Deflection parameters for design (upward deflection is positive)

BDM timeline for construction and Creep Coefficients

	Timeline (days)		
Construction type	1	2	3
Minimum timing	7	30	40
Maximum timing	7	90	120

Note: 1 day steam curing is equivalent to 7 days normal curing.

1 - Release strands
2 - Cut temporary strands and cast diaphram
3 - Composite system

Creep Coefficients for Minimum timing

$f'_{ci} = 7.5\,ksi$

$f'_{c} = 8.5\,ksi$

$\psi_{7.30} := \psi_{cr}(f'_{ci}, 7, 30)$ $\psi_{7.30} = 0.43$

$\psi_{30.40} := \psi_{cr}(f'_{c}, 30, 40)$ $\psi_{30.40} = 0.40$

$\psi_{7.40} := \psi_{cr}(f'_{ci}, 7, 40)$ $\psi_{7.40} = 0.50$

Creep Coefficients for Maximum timing

$\psi_{7.90} := \psi_{cr}(f'_{ci}, 7, 90)$ $\psi_{7.90} = 0.66$

$\psi_{90.120} := \psi_{cr}(f'_{c}, 90, 120)$ $\psi_{90.120} = 0.48$

$\psi_{7.120} := \psi_{cr}(f'_{ci}, 7, 120)$ $\psi_{7.120} = 0.70$

"D" Parameters for Minimum Timing

Net elastic deflection at release $\Delta_{rel} := C_{ps} + C_{tps} + \Delta_g$ $\Delta_{rel} = 1.58\,in$

Creep deflection until temp release $\Delta_{cr.min} := \psi_{7.40}\cdot(C_{ps} + \Delta_g) + \psi_{7.30}\cdot C_{tps} + \psi_{30.40}\cdot\Delta_c$ $\Delta_{cr.min} = 0.78\,in$

"D" dimension at 40 days $D40 := \Delta_{rel} + C_{ps.tr} + \Delta_d + \Delta_{cr.min}$ $D40 = 2.88\,in$

"D" Parameters for Maximum Timing

Creep deflection until temp release $\Delta_{cr.max} := \psi_{7.120}\cdot(C_{ps} + \Delta_g) + \psi_{7.90}\cdot C_{tps} + \psi_{90.120}\cdot\Delta_c$ $\Delta_{cr.max} = 1.09\,in$

"D" dimension at 40 days $D120 := \Delta_{rel} + C_{ps.tr} + \Delta_d + \Delta_{cr.max}$ $D120 = 3.18\,in$

Screed setting dimension "C" - elastic deflection due to slab, traffic barrier, and overlay on noncomposite $C := -(\Delta_{sp} + \Delta_b)$ $C = 1.5\,in$

Excess girder camber to find "A" dimension $\Delta_{excess} := D120 - C$ $\Delta_{excess} = 1.68\,in$

"A" dimension at 120 days (BDM App 5-B-1) $A_{dim} := Ceil\left[t_{s2} + \frac{3}{4}in + \Delta_{excess} + \left(\frac{b_f}{2}\cdot.02\right), 0.25in\right]$ $A_{dim} = 10.8\,in$

15.5 Deflection due to Live Load

Notes:

1. The vehicular load shall included the dynamic allowance (BDM 5.2.6).
2. The live load deflection should be taken as the larger of (LRFD 3.6.1.3.2):
   That resulting from the design truck alone, or
   that resulting from 25% of the design truck taken together with the design lane load
3. The provision of LRFD 3.6.1.1.2 (multiple presence of live load) shall applied.
4. For a straight multi-girder bridge, the deflection shall be taken as deflection per lane times the number of lanes divided by the nu girders (LRFD C2.5.2.6.2).

Live load deflection limit $\Delta_{LL.lim} := -L \div 800$ LRFD 2.5.2.6.2 $\Delta_{LL.lim} = -2.0\,in$

Maximum live load deflection at midspan due to design truck load

Live Load axle weight $P := axle$ $P = 32.0\,kip$

Distance to axle from end of girder span $a := 0.5\cdot\left(L - axle_{truck}\right)$ $a = 58.0\,ft$

Deflection due to 2 heavy axles centered at midspan $\Delta_1 := \frac{-P\cdot a}{24\cdot E_c\cdot I_c}\cdot\left(3\cdot L^2 - 4\cdot a^2\right)$ $\Delta_1 = -0.7\,in$

Weight of front (light) axle $P := axle \div 4$ $P = 8.0\,kip$

Distance from end of girder span to light axle $a := 0.5\cdot L + 1.5\cdot axle_{truck}$ $a = 86.0\,ft$

Deflection due to front (light) axle $\Delta_2 := \frac{-P\cdot(L-a)\cdot(0.5\cdot L)}{6\cdot E_c\cdot I_c\cdot L}\cdot\left[L^2 - (L-a)^2 - \left(\frac{L}{2}\right)^2\right]$ $\Delta_2 = -0.1\,in$

Deflection due to design truck (per lane) $\Delta_{truck.lane} := \Delta_1 + \Delta_2$ $\Delta_{truck.lane} = -0.78\,in$

Deflection due to design (per girder) $\Delta_{truck.girder} := \Delta_{truck.lane}\cdot\left(N_L \div N_b\right)\cdot(1 + IM)$ $\Delta_{truck.girder} = -0.5\,in$

Check deflection limit $chk_{15,1} := if\left(\Delta_{LL.lim} < \Delta_{truck.girder}, "OK" , "NG"\right)$ $chk_{15,1} = "OK"$

Maximum deflection due to lane load at midspan

Deflection due to lane load (per lane) $\Delta_{lane.lane} := \left(-5\cdot w_{lane}\cdot L^4\right) \div \left(384\cdot E_c\cdot I_c\right)$ $\Delta_{lane.lane} = -0.58\,in$

Deflection due to lane load (per girder) $\Delta_{lane.girder} := \Delta_{lane.lane}\cdot\left(N_L \div N_b\right)$ $\Delta_{lane.girder} = -0.29\,in$

Check deflection limit $chk_{15,2} := if\left(\Delta_{LL.lim} < \frac{\Delta_{truck.girder}}{4} + \Delta_{lane.girder}, "OK" , "NG"\right)$

$chk_{15,2} = "OK"$

16. Minimum Strand Spacing

16.1 Minimum spacing of prestressing tendons (LRFD 5.10.3.3.1)

Maximum aggregate size $d_{agg} := 0.375in$

Minimum clear distance between pretensioning strands, including shielded ones, at the end of a member with the development length:

$$sp_{lim} := \max\left[1.33 \cdot d_{agg}, \begin{pmatrix} 2in - d_b & \text{if } d_b = 0.6in \\ 1.75in - d_b & \text{if } d_b = 0.5in \end{pmatrix}\right] \quad sp_{lim} = 1.4\,in$$

Note: The clear distance between strands at the end of a member may be decreased, if justified by performance tests of full-scale prototypes.

Clear spacing used in design $sp_{des} := 2 \cdot in - d_b$ $sp_{des} = 1.4\,in$

Check strand spacing $chk_{16,1} := \text{if}\left(sp_{des} \geq sp_{lim}, \text{"OK"}, \text{"NG"}\right)$ $chk_{16,1} = \text{"OK"}$

List of "NG" checks

Rows in chk matrix $i := 1, 2 .. rows(chk)$ $rows(chk) = 16$

Columns in chk matrix $j := 1, 2 .. cols(chk)$ $cols(chk) = 19$

Design Outline

(double-click hyperlink to go to sections)

1. Material Properties
2. Structure Definition
3. Live Load Definition
4. Computation of Section Properties
5. Limit States
6. Live Load Force Effects
7. Computation of Midspan Stresses
8. Prestressing Forces and Stress Limits
9. Stresses at Service Limit State
10. Stresses at Transfer
11. Strength Limit State
12. Limit for Reinforcement
13. Shear & Longitudinal Reinf Design
14. Lifting, Shipping, and General Stability
15. Deflection and Camber
16. Minimum Strand Spacing
List of "NG" Checks

Check for NG entries $NG := match("NG", chk)$ $NG = \begin{bmatrix} \begin{pmatrix} 1 \\ 1 \end{pmatrix} \\ \begin{pmatrix} 12 \\ 1 \end{pmatrix} \end{bmatrix}$

Coordinates $\begin{pmatrix} x \\ y \end{pmatrix} = \begin{pmatrix} "section" \\ "chk \# in section" \end{pmatrix}$

Note: (1,1) provided for matrix stability

Design Example - Cast-in-Place Slab Design

1 Structure

Design span	$L := 120 \cdot ft$	
Roadway width	$BW := 43 \cdot ft$	barrier face to barrier face
Girder spacing	$S := 9 \cdot ft$	
Skew angle	$\theta := 0 \cdot deg$	
No. of girder	$N_b := 5$	
Curb width on deck,	$cw := 10.5 \cdot in$	

Deck overhang (centerline of exterior girder to end of deck)

$$overhang := \frac{BW - (N_b - 1) \cdot S}{2} + cw \qquad overhang = 4.375\ ft$$

Future overlay (2" HMA), $w_{hma} := 0.140kcf \cdot 2in$ $\qquad w_{hma} = 0.023 \frac{kip}{ft^2}$

2 Criteria and assumptions

2.1 Design Live Load for Decks

(§3.6.1.3.3, not for empirical design method) Where deck is designed using the approximate strip method, specified in §4.6.2.1, the live load shall be taken as the wheel load of the 32.0 kip axle of the design truck, without lane load, where the strips are transverse.

$$if(S \le 15 \cdot ft, "OK", "NG") = "OK" \qquad (§3.6.1.3.3)$$

The design truck or tandem shall be positioned transversely such that the center of any wheel load is not closer than (§3.6.1.3.1)

for the design of the deck overhang - 1 ft from the face of the curb or railing , and

for the design of all other components - 2 ft from the edge of the design lane.

(§3.6.1.3.4) For deck overhang design with a cantilever, not exceeding 6.0 ft from the centerline of the exterior girder to the face of a continuous concrete railing, the wheel loads may be replaced with a uniformly distributed line load of 1.0 klf intensity, located 1 ft from the face of the railing.

$$if(overhang - cw \le 6 \cdot ft, "OK", "NG") = "OK"$$

Horizontal loads on the overhang resulting from vehicle collision with barriers shall be considered in accordance with the yield line analysis.

2.2 Dynamic Load Allowance (impact)

$IM := 0.33$ (§3.6.2.1)

2.3 Minimum Depth and Cover (§9.7.1)

slab design thickness $t_{s1} := 7 \cdot in$

for D.L. calculation $t_{s2} := 7.5 \cdot in$

min. depth $if(t_{s1} \ge 7.0 \cdot in, "OK", "NG") = "OK"$

top concrete cover = 1.5 in. (up to #11 bar) (§5.12.4 & Table 5.12.3-1)
use 2.5 in. (Office Practice)
bottom concrete cover = 1 in. (up to #11 bar)
sacrificial thickness = 0.5 in. (§2.5.2.4)

2.4 Skew Deck (§9.7.1.3 and BDM §5.7.2)

The primary reinforcement shall be placed perpendicular to the main supporting components.

3 Material Properties

3.1 Concrete

$f'_c := 4 \cdot ksi$ Use **CLASS 4000D** for bridge concrete deck (BDM 5.1.1)

$f_{r2} := 0.37 \cdot \sqrt{\frac{f'_c}{ksi}} \cdot ksi$ $f_{r2} = 0.74\,ksi$ (§5.4.2.6) for use in §5.7.3.3.2

$w_c := 0.160 \cdot kcf$

$E_c := 33000 \cdot \left(\frac{w_c}{kcf}\right)^{1.5} \cdot \sqrt{\frac{f'_c}{ksi}} \cdot ksi$ $E_c = 4224.0\,ksi$ (§5.4.2.4)

3.2 Reinforcing Steel (§5.4.3)

$f_y := 60 \cdot ksi$ $E_s := 29000 \cdot ksi$

4 Methods of Analysis

Concrete deck slabs may be analyzed by using

Approximate elastic methods of analysis, or
Refined methods of analysis, or
Empirical design.

Per office practice, concrete deck slab shall be designed and detailed for both empirical and traditional design methods.

5 Empirical Design (§9.7.2)

5.1 Limit States (§9.5.1)

For other than the deck overhang, where empirical design is used, a concrete deck maybe assumed to satisfy service, fatigue and fracture and strength limit states requirements.

Empirical design shall not be applied to overhangs (§9.7.2.2).

5.2 Design Conditions (§9.7.2.4)

For the purpose of empirical design method, the effective length S_{eff} shall be taken as (§9.7.2.3),

web thickness $b_w := 6.125 \cdot in$

top flange width $b_f := 49 \cdot in$

$S_{eff} := S - b_f + \frac{b_f - b_w}{2}$ $S_{eff} = 6.7\,ft$

The design depth of the slab shall exclude the loss that is expected to occur as a result of grinding, grooving, or wear.

$if\left(18.0 \geq \frac{S_{eff}}{t_{s1}} \geq 6.0, "OK", "NG"\right) = "OK"$ $\frac{S_{eff}}{t_{s1}} = 11.491$

core depth $if\left(t_{s2} - 2.5 \cdot in - 1 \cdot in \geq 4 \cdot in, "OK", "NG"\right) = "OK"$

$if\left(S_{eff} \leq 13.5 \cdot ft, "OK", "NG"\right) = "OK"$

$if\left(t_{s1} \geq 7in, "OK", "NG"\right) = "OK"$

$if\left(overhang \geq 3 \cdot t_{s1}, "OK", "NG"\right) = "OK"$ $overhang = 52.5\,in$ $3 \cdot t_{s1} = 21\,in$

a structurally continuous concrete barrier is made composite with the overhang,

$if\left(f'_c \geq 4 \cdot ksi, "OK", "NG"\right) = "OK"$

The deck is made composite with the supporting structural components.

Composite construction **for steel girder (N/A)**

A minimum of two shear connectors at 2 ft centers shall be provided in the M- region of continuous steel superstructures.

5.3 Optional deflection criteria for span-to-depth ratio (LRFD Table 2.5.2.6.3.1)

For slabs with main reinforcement <u>parallel</u> to traffic (however, the criteria is used per Office Practice)

Min. Depth (continuous span) where $S_{eff} = 6.703\,ft$ (slab span length):

$if\left[\max\left(\left(\frac{S_{eff} + 10 \cdot ft}{30}\right)\right) \leq t_{s2}, "OK", "NG"\right] = "OK"$ $\max\left(\left(\frac{S_{eff} + 10 \cdot ft}{30}\right)\right) = 6.7\,in$

5.4 Reinforcement Requirement (§9.7.2.5)

Four layers of reinforcement is required in empirically designed slabs.

The amount of deck reinforcement shall be (§C9.7.2.5)

0.27 in²/ft for each bottom layer (0.3% of the gross area of 7.5 in. slab)

0.18 in²/ft for each top layer (0.2% of the gross area)

Try #5 @ 14 in. for bottom longitudinal and transverse, $0.31 \cdot in^2 \cdot \frac{1 \cdot ft}{14 \cdot in} = 0.27\,in^2$ per ft

#4 @ 12 in. for top longitudinal and transverse. $0.2 \cdot in^2 \cdot \frac{1 \cdot ft}{12 \cdot in} = 0.2\,in^2$ per ft

Spacing of steel shall not exceed 18 in.

$\text{if}(\theta \geq 25 \cdot deg, \text{"OK"}, \text{"NG"}) = \text{"NG"}$ if OK, double the specified reinforcement in the end zones, taken as a longitudinal distance equal to S_{eff}.

6 Traditional Design

6.1 Design Assumptions for Approx. Method of Analysis (§4.6.2)

Deck shall be subdivided into strips perpendicular to the supporting components (§4.6.2.1.1).
Continuous beam with span length as center to center of supporting elements (§4.6.2.1.6).
Wheel load may be modeled as concentrated load or load based on tire contact area.
Strips should be analyzed by classical beam theory.

6.2 Width of Equivalent Interior Strip (§4.6.2.1.3)

Strip width calculations are not needed since live load moments from Table A4-1 are used.

Spacing in secondary direction (spacing between diaphragms):

$L_d := \frac{L}{4}$ $L_d = 30.0$ ft

Spacing in primary direction (spacing between girders):

$S = 9$ ft

Since $\text{if}\left(\frac{L_d}{S} \geq 1.50, \text{"OK"}, \text{"NG"}\right) = \text{"OK"}$, where $\frac{L_d}{S} = 3.33$ (§4.6.2.1.5)

Therefore, all the wheel load shall be applied to primary strip. Otherwise, the wheels shall be distributed between intersecting strips based on the stiffness ratio of the strip to sum of the strip stiffnesses of intersecting strips.

6.3 Limit States (§5.5.1)

Where traditional design based on flexure is used, the requirements for strength and service limit states shall be satisfied.
Extreme event limit state shall apply for the force effect transmitted from the bridge railing to bridge deck (§13.6.2).
Fatigue need not be investigated for concrete deck slabs in multi-girder applications (§5.5.3.1).

6.4 Strength Limit States

Resistance factors (§5.5.4.2.1)

$\phi_f := 0.90$ for flexure and tension of reinforced concrete

$\phi_v := 0.90$ for shear and torsion

Load Modifier

$\eta_D := 1.00$ for conventional design (§1.3.3)

$\eta_R := 1.00$ for conventional level of redundancy (§1.3.4)

$\eta_I := 1.00$ for typical bridges (§1.3.5)

$\eta := \max\left(\begin{pmatrix} \eta_D \cdot \eta_R \cdot \eta_I \\ 0.95 \end{pmatrix}\right)$ $\eta = 1$ (§1.3.2)

Strength I load combination - normal vehicular load without wind (§3.4.1)

Load factors (LRFD Table 3.4.1-1&2):

$\gamma_{dc} := 1.25$ for component and attachments

$\gamma_{dw} := 1.50$ for wearing surface and utilities (max.)

$\gamma_L := 1.75$ for LL

Multiple presence factor (§3.6.1.1.2):

$M_1 := 1.20$ 1 truck

$M_2 := 1.00$ 2 trucks

$M_3 := 0.85$ 3 trucks (Note; 3 trucks never control for girder spacings up to 15.5 ft, per training notes)

6.4.1 Moment Force Effects Per Strip (§4.6.2.1.6)

The design section for negative moments and shear forces may be taken as follows:

Prestressed girder - shall be at 1/3 of flange width < 15 in.

Steel girder - 1/4 of flange width from the centerline of support.

Concrete box beams - at the face of the web.

web thickness $b_w = 6.13\,in$

top flange width $b_f = 49\,in$

Design critical section for negative moment and shear shall be at d_c, (§4.6.2.1.6)

$d_c := \min\left(\begin{pmatrix} \frac{b_f}{3} \\ 15 \cdot in \end{pmatrix}\right)$ $d_c = 15\,in$ from CL of girder (may be too conservative, see training notes)

Maximum factored moments **per unit width** based on Table A4-1: for $S = 9\ ft$

(include multiple presence factors and the dynamic load allowance)

applicability $if[\min((0.625 \cdot S \quad 6 \cdot ft)) \geq overhang - cw, "OK", "NG"] = "OK"$

$if(N_b \geq 3, "OK", "NG=") = "OK"$

$M_{LLp} := 6.29 \cdot \frac{kip \cdot ft}{ft}$

$M_{LLn} := 3.51 \cdot \frac{kip \cdot ft}{ft}$ (max. -M at d_c from CL of girder)

Dead load moments

$M_{DCp} := \frac{t_{s2} \cdot w_c \cdot S^2}{10}$ $M_{DCp} = 0.81 \frac{kip \cdot ft}{ft}$ (max. $+M_{DC}$)

$M_{DWp} := \frac{w_{hma} \cdot S^2}{10}$ $M_{DWp} = 0.189 \frac{kip \cdot ft}{ft}$ (max. $+M_{Dw}$)

$M_{DCn} := M_{DCp}$ $M_{DCn} = 0.81 \frac{kip \cdot ft}{ft}$ (max. $-M_{DC}$ at d_c at interior girder)

$M_{DWn} := M_{DWp}$ $M_{DWn} = 0.189 \frac{kip \cdot ft}{ft}$ (max. $-M_{Dw}$ at d_c at interior girder)

Factored positive moment per ft

$M_{up} := \eta \cdot (\gamma_{dc} \cdot M_{DCp} + \gamma_{dw} \cdot M_{DWp} + \gamma_L \cdot M_{LLp})$ $M_{up} = 12.3 \frac{kip \cdot ft}{ft}$

Factored negative moment

$M_{un} := \eta \cdot (\gamma_{dc} \cdot M_{DCn} + \gamma_{dw} \cdot M_{DWn} + \gamma_L \cdot M_{LLn})$ $M_{un} = 7.44 \frac{kip \cdot ft}{ft}$

6.4.2 Flexural Resistance

Normal flexural resistance of a rectangular section may be determined by using equations for a flanged section in which case b_w shall be taken as b (§5.7.3.2.3).

$\beta_1 := if\left[f'_c \le 4 \cdot ksi, 0.85, 0.85 - 0.05 \cdot \left(\frac{f'_c - 4.0 \cdot ksi}{1.0 \cdot ksi}\right)\right]$ $\beta_1 := \begin{cases} \beta_1 & \text{if } \beta_1 \ge 0.65 \\ 0.65 & \text{otherwise} \end{cases}$

$\beta_1 = 0.85$ (§5.7.2.2)

6.4.3 Design for Positive Moment Region

assume bar # $bar_p := 5$

$dia(bar) := \begin{cases} 0.5 \cdot in & \text{if } bar = 4 \\ 0.625 \cdot in & \text{if } bar = 5 \\ 0.75 \cdot in & \text{if } bar = 6 \end{cases}$

$d_p := t_{s1} - 1 \cdot in - \frac{dia(bar_p)}{2}$ $d_p = 5.7\,in$

$A_s := \frac{0.85 \cdot f'_c \cdot ft}{f_y} \cdot \left(d_p - \sqrt{d_p^2 - \frac{2 \cdot M_{up} \cdot ft}{0.85 \cdot \phi_f \cdot f'_c \cdot ft}}\right)$ $A_s = 0.52\,in^2$ per ft

use (bottom-transverse) # $bar_p = 5$ $s_p := 7.5 \cdot in$ (max. spa. 12 in. per BDM memo)

$$A_b(bar) := \begin{cases} 0.20\cdot in^2 & \text{if } bar = 4 \\ 0.31\cdot in^2 & \text{if } bar = 5 \\ 0.44\cdot in^2 & \text{if } bar = 6 \end{cases}$$

$A_{sp} := A_b(bar_p)\cdot\frac{1\cdot ft}{s_p}$ $A_{sp} = 0.5\,in^2$ per ft

Check min. reinforcement (§5.7.3.3.2),

$M_{cr} := f_{r2}\cdot\frac{1}{6}\cdot 12\cdot in\cdot t_{s2}^2$ $1.2\cdot M_{cr} = 8.325\,kip\cdot ft$ $M_{up}\cdot ft = 12.30\,kip\cdot ft$

$if(M_{up}\cdot ft \geq 1.2\cdot M_{cr}, "OK", "NG") = "OK"$

6.4.4 Design for Negative Moment Region

assume bar # $bar_n := 5$

$d_n := t_{s1} - 2.0\cdot in - \frac{dia(bar_n)}{2}$ $d_n = 4.69\,in$

$A_s := \frac{0.85\cdot f'_c\cdot ft}{f_y}\cdot\left(d_n - \sqrt{d_n^2 - \frac{2\cdot M_{un}\cdot ft}{0.85\cdot\phi_f\cdot f'_c\cdot ft}}\right)$ $A_s = 0.37\,in^2$ per ft

use (top-transverse) bar # $bar_n = 5$ $s_n := 7.5\cdot in$ (max. spa. 12 in. per BDM memo)

$A_{sn} := A_b(bar_n)\cdot\frac{1\cdot ft}{s_n}$ $A_{sn} = 0.5\,in^2$ per ft

Check min. reinforcement (§5.7.3.3.2),

$M_{cr} := f_{r2}\cdot\frac{1}{6}\cdot 12\cdot in\cdot t_{s2}^2$ $1.2\cdot M_{cr} = 8.325\,kip\cdot ft$ $M_{un}\cdot ft = 7.438\,kip\cdot ft$

$if(M_{un}\cdot ft \geq 1.2\cdot M_{cr}, "OK", "NG") = "NG"$

Design for 1.2 Mcr,

$\frac{0.85\cdot f'_c\cdot ft}{f_y}\cdot\left(d_n - \sqrt{d_n^2 - \frac{2\cdot 1.2\cdot M_{cr}}{0.85\cdot\phi_f\cdot f'_c\cdot ft}}\right) = 0.42\,in^2$ **Say OK**

6.5 Control of Cracking by Distribution of Reinforcement (§5.7.3.4)

Service I load combination is to be considered for crack width control (§3.4.1).

Combined limit state load modifier (§1.3.2)

$\eta_s := 1$

Load factors (LRFD Table 3.4.1-1):

$\gamma_{dc} := 1.00$ for component and attachments

$\gamma_{dw} := 1.00$ for wearing surface and utilities (max.)

$\gamma_L := 1.00$ for LL

$M_{sp} := \eta_s \cdot (\gamma_{dc} \cdot M_{DCp} + \gamma_{dw} \cdot M_{DWp} + \gamma_L \cdot M_{LLp})$ $M_{sp} = 7.29 \frac{kip \cdot ft}{ft}$

$M_{sn} := \eta_s \cdot (\gamma_{dc} \cdot M_{DCn} + \gamma_{dw} \cdot M_{DWn} + \gamma_L \cdot M_{LLn})$ $M_{sn} = 4.51 \frac{kip \cdot ft}{ft}$

$\gamma_{ep} := 0.75$ for Class 2 exposure condition for deck (assumed)

$\gamma_{en} := 0.75$ for Class 2 exposure condition for deck (assumed)

$h := t_{s1}$ $h = 7\,in$

$\rho_p := \frac{A_{sp}}{d_p \cdot 12 \cdot in}$ $\rho_n := \frac{A_{sn}}{d_n \cdot 12 \cdot in}$

$n := \frac{E_s}{E_c}$ $n = 6.866$ $n := \max([[\text{ceil}((n - 0.495))\ \ 6]])$

set $n = 7$ (round to nearest integer, §5.7.1, not less than 6)

$k(\rho) := \sqrt{(\rho \cdot n)^2 + 2 \cdot \rho \cdot n} - \rho \cdot n$ $k(\rho_p) = 0.272$

$j(\rho) := 1 - \frac{k(\rho)}{3}$ $j(\rho_p) = 0.909$

$f_{sa} := \frac{M_{sp} \cdot ft}{A_{sp} \cdot j(\rho_p) \cdot d_p}$ $f_{sa} = 34.1\,ksi$

for $bar_p = 5$ $s_p = 7.5\,in$

$d_c := (1 \cdot in) + \frac{dia(bar_p)}{2}$ $d_c = 1.3\,in$ (the actual concrete cover is to be used to compute d_c)

$\beta_s := 1 + \frac{d_c}{0.7(h - d_c)}$ $\beta_s = 1.33$

$\text{if}\left(s_p \le \frac{700 \cdot \gamma_{ep} \cdot in}{\beta_s \cdot \frac{f_{sa}}{ksi}} - 2 \cdot d_c, \text{"OK"}, \text{"NG"}\right) = \text{"OK"}$ where $s_p = 7.5\,in$ $\frac{700 \cdot \gamma_{ep} \cdot in}{\beta_s \cdot \frac{f_{sa}}{ksi}} - 2 \cdot d_c = 9.0\,in$

$k(\rho_n) = 0.295$ $j(\rho_n) = 0.902$

$$f_{sa} := \frac{M_{sn} \cdot ft}{A_{sn} \cdot j(\rho_n) \cdot d_n} \qquad f_{sa} = 25.8\,ksi$$

for $bar_n = 5$ $s_n = 7.5\,in$

$$d_c := 2in + \frac{dia(bar_n)}{2} \qquad d_c = 2.31\,in$$ (the actual concrete cover is to be used to compute d_c)

$$\beta_s := 1 + \frac{d_c}{0.7(h - d_c)} \qquad \beta_s = 1.705$$

$$if\left(s_n \le \frac{700 \cdot \gamma_{en} \cdot in}{\beta_s \cdot \frac{f_{sa}}{ksi}} - 2 \cdot d_c, "OK", "NG"\right) = "NG"$$ where $s_n = 7.5\,in$ $\frac{700 \cdot \gamma_{en} \cdot in}{\beta_s \cdot \frac{f_{sa}}{ksi}} - 2 \cdot d_c = 7.3\,in$

say OK

6.6 Shrinkage and Temperature Reinforcement (§5.10.8.2)

For components less than 48 in. thick,

where $A_g := t_{s2} \cdot 1 \cdot ft$

$$A_{tem} := 0.11 \cdot \frac{A_g \cdot ksi}{f_y} \qquad A_{tem} = 0.17\,in^2$$ per ft

The spacing of this reinforcement shall not exceed $3 \cdot t_{s1} = 21\,in$ or 18 in (**per BDM memo 12 in.)**

top longitudinal - $bar := 4$ $s := 12 \cdot in$ $A_s := A_b(bar) \cdot \frac{1 \cdot ft}{s}$ $A_s = 0.2\,in^2$ per ft **OK**

6.7 Distribution of Reinforcement (§9.7.3.2)

The effective span length S_{eff} shall be taken as (§9.7.2.3):

$S_{eff} = 6.70$ ft

For primary reinforcement perpendicular to traffic:

$$percent := \min\left(\left(\frac{220}{\sqrt{\frac{S_{eff}}{ft}}} \quad 67\right)\right) \qquad percent = 67$$

Bottom longitudinal reinforcement (**per BDM memo < slab thickness**): $t_{s2} = 7.5\,in$

$A_s := \frac{percent}{100} \cdot A_{sp}$ $A_s = 0.33\,in^2$ per ft

use bar # $bar := 4$ $s := 7.5 \cdot in$ $A_s := A_b(bar) \cdot \frac{1 \cdot ft}{s}$ $A_s = 0.32\,in^2$ per ft **OK**

6.8 Maximum bar spacing (§5.10.3.2)

Unless otherwise specified, the spacing of the primary reinforcement in walls and slabs shall not exceed 1.5 times the thickness of the member or 18 in.. The maximum spacing of temperature shrinkage reinforcement shall be as specified in §5.10.8.

$1.5 \cdot t_{s1} = 10.5\,in$ **OK**

6.9 Protective Coating (§5.12.4)

Epoxy coated reinforcement shall be specified for both top and bottom layer slab reinforcements except only top layer when the slab is with longitudinal post-tensioning.

7 Slab Overhang Design

(§3.6.1.3.4) Horizontal loads resulting from vehicular collision with barrier shall be considered in accordance with the provisions of LRFD Section 13.
(§13.7.3.1.2) Unless a lesser thickness can be proven satisfactory during the crash testing procedure, the min. edge thickness for concrete deck overhangs shall be taken as 8 in. for concrete deck overhangs supporting concrete parapets or barriers.

7.1 Applicable Limit States (§5.5.1)

Where traditional design based on flexure is used, the requirements for strength and service limit states shall be satisfied.

Extreme event limit state shall apply for the force effect transmitted from the bridge railing to bridge deck (§13.6.2).

7.2 Strength Limit state

Load Modifier

$\eta_D := 1.00$ for ductile components and connections (§1.3.3 & simplified)

$\eta_R := 1.00$ for redundant members (§1.3.4)

$\eta_I := 1.00$ for operationally important bridge (§1.3.5)

$\eta := \max\left(\begin{pmatrix} \eta_D \cdot \eta_R \cdot \eta_I \\ 0.95 \end{pmatrix}\right)$ $\eta = 1$ (§1.3.2)

Load factors (LRFD Table 3.4.1-1):

$\gamma_{dc} := 1.25$ for component and attachments

$\gamma_{dw} := 1.50$ for wearing surface and utilities (max.)

$\gamma_L := 1.75$ for LL

7.3 Extreme Event Limit State II

Extreme event limit state shall apply for the force effect transmitted from the vehicular collision force.

Load Modifier

$\eta_D := 1.00$ (§1.3.3)

$\eta_R := 1.00$ (§1.3.4)

$\eta_I := 1.00$ (§1.3.5)

$\eta_e := \max\left(\begin{pmatrix} \eta_D \cdot \eta_R \cdot \eta_I \\ 0.95 \end{pmatrix}\right)$ $\eta_e = 1$ (§1.3.2)

Load factors (LRFD Table 3.4.1-1):

$\gamma_{dc} := 1.25$ for component and attachments

$\gamma_{dw} := 1.50$ for wearing surface and utilities (max.)

$\gamma_{CT} := 1.00$ for collision force

7.4 Vehicular Collision Force (§13.7.2)

Railing test level TL-4 applies for high-speed highways, freeways, and interstate highways with a mixture of trucks and heavy vehicles.

The transverse and longitudinal loads need not be applied in conjunction with vertical loads (§A13.2). Design forces for railing test level **TL-4** (LRFD Table A13.2-1),

transverse	$F_t := 54 \cdot kip$
longitudinal	$F_L := 18 \cdot kip$
vertical (down)	$F_v := 18 \cdot kip$

Effective Distances:

transverse	$L_t := 3.50 \cdot ft$
longitudinal	$L_L := 3.50 \cdot ft$
vertical	$L_v := 18 \cdot ft$

Min. design height, H, 32 in. (LRFD Table A13.2-1) use $H := 32 \cdot in$

7.5 Design Procedure (§A13.3)

Yield line analysis and strength design for reinforced concrete may be used.

7.6 Nominal Railing Resistance (§A13.3)

For F-shape barriers, the approximate flexural resistance may be taken as:

Flexural capacity about vertical axis,

$M_w := 35.62 \cdot kip \cdot ft$

Additional flexural resistance of beam in addition to M_w , if any, at top of wall,

$M_b := 10.27 \cdot kip \cdot ft$

Flexural capacity about horizontal axis,

$M_c := 19.21 \cdot \frac{kip \cdot ft}{ft}$

Critical wall length, over which the yield mechanism occurs, L_c , shall be taken as:

$$L_c := \frac{L_t}{2} + \sqrt{\left(\frac{L_t}{2}\right)^2 + \frac{8 \cdot H \cdot (M_b + M_w)}{M_c}} \qquad L_c = 9.1\,ft$$

For impact within a barrier segment, the total transverse resistance of the railing may be taken as:

$$R_w := \left(\frac{2}{2 \cdot L_c - L_t}\right) \cdot \left(8 \cdot M_b + 8 \cdot M_w + \frac{M_c \cdot L_c^2}{H}\right) \qquad R_w = 131.11\,kip$$

7.7 Design Load Cases (§A13.4.1)

Case 1

Transverse and longitudinal forces at extreme event limit state.

Resistance factor (§A13.4.3.2) $\phi := 1.0$

(§C13.7.3.1.2) Presently, in adequately designed bridge deck overhangs, the major crash-related damage occurs in short sections of slab areas where the barriers is hit.

a. at inside face of parapet

$M_s := \frac{\min\left(\left(R_w \quad 1.2 \cdot F_t\right)\right) \cdot H}{L_c + 2 \cdot H}$ moment capacity of the base of the parapet (see memo),

$M_s = 11.97 \frac{kip \cdot ft}{ft}$

$M_{DCa} := 0.45 \cdot \frac{kip \cdot ft}{ft}$ DL M- at edge of curb (see deck.gts STRUDL output), cw = 0.875 ft

design moment

$$M_u := \eta_e \cdot (\gamma_{dc} \cdot M_{DCa} + \gamma_{CT} \cdot M_s) \qquad M_u = 12.5 \frac{kip \cdot ft}{ft}$$

(§A13.4.2) Deck overhang may be designed to provide a flexural resistance, M_s, which is acting in coincident with tensile force, T (see memo),

$$T := \frac{\min\left(\left(R_w \quad 1.2\cdot F_t\right)\right)\cdot ft}{L_c + 2\cdot H} \qquad T = 4.49\,kip \qquad \text{per ft}$$

min. "haunch+slab" dimension, $A = 8.25\,in$

$A := t_{s2} + 0.75\cdot in$

d_s, flexural moment depth at edge of curb,

assume bar # $bar_o := 5$

$$d_s := \left(7\cdot in + \frac{A - 7\cdot in}{overhang - 0.5\cdot b_f}\cdot cw\right) - 2.5\cdot in - \frac{dia\left(bar_o\right)}{2} \qquad d_s = 4.7\,in$$

A_s required for M_u and T,

$$A_s := \frac{0.85\cdot f'_c\cdot ft}{f_y}\cdot\left(d_s - \sqrt{{d_s}^2 - \frac{2\cdot M_u\cdot ft}{0.85\cdot\phi\cdot f'_c\cdot ft}}\right) + \frac{T}{f_y} \qquad A_s = 0.67\,in^2 \qquad \text{per ft} \qquad (1)$$

Check max. reinforcement (§5.7.3.3.1)

The max. amount of prestressed and non-prestressed reinforcement shall be such that

where d_e $\qquad d_e := d_s \qquad d_e = 4.7\,in$

$$c := \frac{A_s\cdot f_y - T}{0.85\cdot\beta_1\cdot f'_c\cdot 1\cdot ft} \qquad c = 1\,in$$

$$if\left(\frac{c}{d_e} \le 0.42, "OK", "NG"\right) = "OK" \qquad \frac{c}{d_e} = 0.221$$

The section is not over-reinforced. Over-reinforced reinforced concrete sections shall not be permitted.

b. at design section in the overhang

Design critical section for negative moment and shear shall be at d_c, (§4.6.2.1.6)

$$d_c := \min\left(\left(\frac{b_f}{3} \quad 15\cdot in\right)\right) \qquad d_c = 15\,in$$

from CL of girder (may be too conservative, see training notes)

At the inside face of the parapet, the collision forces are distributed over a distance L_c for the moment and $L_c + 2H$ for the axial force. Similarly, assume the distribution length is increased in a 30 degree angle from the base of the parapet,

Collision moment at design section,

$$M_{se} := \frac{M_s \cdot L_c}{L_c + 2 \cdot 0.577 \cdot (overhang - cw - d_c)} \qquad M_{se} = 9.31 \frac{kip \cdot ft}{ft}$$

dead load moment @ d_c **from CL of exterior girder** (see deck.gts STRUDL output)

$overhang - d_c = 3.125$ ft from edge of deck

$$M_{DCb} := 1.96 \cdot \frac{kip \cdot ft}{ft} \qquad M_{DWb} := 0.06 \cdot \frac{kip \cdot ft}{ft}$$

design moment

$$M_u := \eta_e \cdot (\gamma_{dc} \cdot M_{DCb} + \gamma_{dw} \cdot M_{DWb} + \gamma_{CT} \cdot M_{se}) \qquad M_u = 11.85 \frac{kip \cdot ft}{ft}$$

(§A13.4.2) design tensile force, T,

$$T := \frac{\min((R_w \quad 1.2 \cdot F_t)) \cdot ft}{L_c + 2 \cdot H + 2 \cdot 0.577 \cdot (overhang - cw - d_c)} \qquad T = 3.81 \text{ kip} \qquad \text{per ft}$$

d_s, flexural moment depth at design section in the overhang.

$$d_s := A - 2.5 \cdot in - \frac{dia(bar_o)}{2} \qquad d_s = 5.4 \text{ in}$$

A_s required for M_u and T,

$$\frac{0.85 \cdot f'_c \cdot ft}{f_y} \cdot \left(d_s - \sqrt{d_s^2 - \frac{2 \cdot M_u \cdot ft}{0.85 \cdot \phi \cdot f'_c \cdot ft}} \right) + \frac{T}{f_y} = 0.53 \text{ in}^2 \qquad \text{per ft} \qquad \text{(doesn't control)} \qquad (2)$$

c. at design section in first interior span

The collision moment per unit width at the section under consideration can then be determined using the 30° distribution.

$$M_s = 11.97 \frac{kip \cdot ft}{ft}$$

Collision moment at at d_c from the exterior girder, (see deck.gts output, barrierM factor for 1 kip-ft of Ms),

$$M_{si} := M_s \cdot 0.824 \qquad M_{si} = 9.87 \frac{kip \cdot ft}{ft}$$

Using the 30° angle distribution, design moment

$$M_{si} := \frac{M_{si} \cdot L_c}{L_c + 2 \cdot 0.577 \cdot (overhang - cw + d_c)} \qquad M_{si} = 6.16 \frac{kip \cdot ft}{ft}$$

dead load moment @ this section (see deck.gts output) $d_c = 1.25$ ft

$$M_{DCi} := 2.11 \cdot \frac{kip \cdot ft}{ft} \qquad M_{DWi} := 0.03 \cdot \frac{kip \cdot ft}{ft}$$

design moment

$$M_u := \eta_e \cdot (\gamma_{dc} \cdot M_{DCi} + \gamma_{dw} \cdot M_{DWi} + \gamma_{CT} \cdot M_{si}) \qquad M_u = 8.84 \frac{kip \cdot ft}{ft}$$

d_s, flexural moment depth at the design section,

$$d_s := t_{s1} - 2.0 \cdot in - \frac{dia(bar_o)}{2} \qquad d_s = 4.69\,in$$

A_s required for M_u,

$$\frac{0.85 \cdot f'_c \cdot ft}{f_y} \cdot \left(d_s - \sqrt{d_s^2 - \frac{2 \cdot M_u \cdot ft}{0.85 \cdot \phi \cdot f'_c \cdot ft}} \right) = 0.4\,in^2 \qquad \text{per ft (doesn't control)} \qquad (3)$$

Case 2 Vertical collision force

For concrete parapets, the case of vertical collision never controls.

Case 3 Check DL + LL

Resistance factor (§1.3.2.1) $\phi_f := 0.9$

For deck overhangs, where applicable, the §3.6.1.3.4 may be used in lieu of the equivalent strip method (§4.6.2.1.3).

a. at design section in the overhang

moment arm for 1.0 kip/ft live load (§3.6.1.3.4)

$$x := overhang - cw - 1 \cdot ft - d_c \qquad x = 15\,in$$

live load moment without impact,

$$w_L := 1.0 \cdot \frac{kip}{ft}$$

$$M_{LL} := M_1 \cdot w_L \cdot x \qquad M_{LL} = 1.5 \frac{kip \cdot ft}{ft}$$

factored moment

$$M_u := \eta \cdot \left[\gamma_{dc} \cdot M_{DCb} + \gamma_{dw} \cdot M_{DWb} + \gamma_L \cdot M_{LL} \cdot (1.0 + IM) \right] \qquad M_u = 6.03 \frac{kip \cdot ft}{ft}$$

d_s, flexural moment depth at edge of curb,

$$d_s := A - 2.5 \cdot in - \frac{dia(bar_o)}{2} \qquad d_s = 5.44\,in$$

A_s required for M_u,

$$\frac{0.85\cdot f'_c\cdot ft}{f_y}\cdot\left(d_s-\sqrt{d_s^{\,2}-\frac{2\cdot M_u\cdot ft}{0.85\cdot\phi_f\cdot f'_c\cdot ft}}\right)=0.26\,in^2 \qquad \text{per ft} \qquad \text{(doesn't control)} \qquad (4)$$

b. at design section in first span

Assume slab thickness at this section, $t_{s1}=7\,in$

use the same D.L. + L.L moment as in previous for design (approximately)

factored moment $M_u=6.03\,\frac{kip\cdot ft}{ft}$

d_s, flexural moment depth at edge of curb,

$$d_s:=t_{s1}-2.0\cdot in-\frac{dia(bar_o)}{2} \qquad d_s=4.7\,in$$

A_s required for M_u,

$$\frac{0.85\cdot f'_c\cdot ft}{f_y}\cdot\left(d_s-\sqrt{d_s^{\,2}-\frac{2\cdot M_u\cdot ft}{0.85\cdot\phi_f\cdot f'_c\cdot ft}}\right)=0.3\,in^2 \qquad \text{(doesn't control)} \qquad (5)$$

The largest of (1) to (5), As required, $A_s=0.67\,in^2$ per ft

use bar # $bar_o=5$ @ $s:=22.5\cdot in$ $bar_n=5$ $s_n=7.5\,in$ **(top transverse) at edge of curb, put 1 #5 between every other top bar in the deck overhang region**

$$A_s:=A_b(bar_o)\cdot\frac{1\cdot ft}{s}+A_b(bar_n)\cdot\frac{1\cdot ft}{s_n} \qquad A_s=0.66\,in^2 \qquad \textbf{say OK}$$

Determine the point in the first bay of the deck where the additional bars are no longer needed,

$$A_s:=A_b(bar_n)\cdot\frac{1\cdot ft}{s_n} \qquad A_s=0.5\,in^2$$

$$c:=\frac{A_s\cdot f_y}{0.85\cdot\beta_1\cdot f'_c\cdot 1\cdot ft} \qquad c=0.9\,in$$

$$d_e:=t_{s1}-2.0\cdot in-\frac{dia(bar_n)}{2} \qquad d_e=4.7\,in$$

$a:=\beta_1\cdot c \qquad a=0.7\,in$

For the strength limit state,

$$M_{cap}:=\phi_f\cdot A_s\cdot f_y\cdot\left(d_e-\frac{a}{2}\right) \qquad M_{cap}=9.65\,kip\cdot ft \qquad \text{per ft}$$

For the extreme event limit state,

$$M_{cap} := \phi \cdot A_s \cdot f_y \cdot \left(d_e - \frac{a}{2} \right) \qquad M_{cap} = 10.72\,\text{kip}\cdot\text{ft} \qquad \text{per ft}$$

By inspection of (1) to (5), no additional bar is required beyond design section of the first bay.

Cut off length requirement (§5.11.1.2)

$15 \cdot \text{dia}(\text{bar}_o) = 0.781$ ft (controls by inspection)

8 Reinforcing Details

8.1 Development of Reinforcement (§5.11.2.1.1)

basic development length for #11 bar and smaller,

$$L_{db}(d_b, A_b) := \max\left(\begin{pmatrix} 1.0\cdot\text{ft} \\ \dfrac{1.25 \cdot A_b \cdot f_y \cdot \sqrt{\text{ksi}}}{\text{in}\cdot\text{ksi}\cdot\sqrt{f'_c}} \\ 0.4 \cdot d_b \cdot \dfrac{f_y}{\text{ksi}} \end{pmatrix} \right)$$

For **#5** bars, $L_{db}\left(0.625\cdot\text{in}, 0.31\cdot\text{in}^2\right) = 15\,\text{in}$

For **#6** bars, $L_{db}\left(0.75\cdot\text{in}, 0.44\cdot\text{in}^2\right) = 18\,\text{in}$

For **epoxy coated** bars (§5.11.2.1.2),

with cover less than $3d_b$ or with clear spacing less than $6d_b$ .....times 1.5

not covered above .....times 1.2

For **widely spaced** bars..... times 0.8 (§5.11.2.1.3)

bars spaced laterally not less than 6 in. center-to-center, with not less than 3. in clear cover measured in the direction of spacing.

For **bundled** bars..... times 1.2 for a three-bar bundle (§5.11.2.3)

Lap Splices in Tension (§5.11.5.3.1)

The length of lap for tension lap splices shall not be less than either 12 in. or the following for Class A, B, or C splices:

Class A splice ..... times 1.0
Class B splice ..... times 1.3
Class C splice ..... times 1.7

Flexural Reinforcement (§5.11.1.2)

Except at supports of simple-spans and at the free ends of cantilevers, reinforcement shall be extended beyond the point at which it is no longer required to resist flexure for a distance not less than:

the effective depth of the member,
15 times the nominal diameter of bar, or
1/20 of the clear span.

No more than 50% of the reinforcement shall be terminated at any section, and adjacent bars shall not be terminated in the same section.

Positive moment reinforcement (§5.11.1.2.2)

At least 1/3 the positive moment reinforcement in simple-span members, and 1/4 the positive moment reinforcement in continuous members, shall extend along the same face of the member beyond the centerline of the support. In beams, such extension shall not be less than 6 in.

Negative moment reinforcement (§5.11.1.2.3)

At least 1/3 of the total tension reinforcement provided for negative moment at a support shall have an embedment length length beyond the point of inflection (DL + LL) not less than:

the effective depth of the member, d
12.0 d_b, and
0.0625 times the clear span.

Moment resisting joints (§5.11.1.2.4)

In Seismic Zones 3 and 4, joint shall be detailed to resist moments and shears resulting from horizontal loads through the joint.

Q.E.D.

Precast Concrete Stay-In-Place (SIP) Deck Panel

Design Criteria

Loading: HL-93

Concrete:

SIP Panel, $f'_{ci} := 4.0 \cdot ksi$

$f'_c := 5.0 \cdot ksi$ (f'ci + 1 ksi)

CIP slab, $f'_{cs} := 4 \cdot ksi$

Reinforcing Steel: (§5.4.3)

AASHTO M-31, Grade 60, $f_y := 60 \cdot ksi$ $E_s := 29000 \cdot ksi$

Prestressing Steel:

AASHTO M-203, uncoated 7 wire, low-relaxation strands (§5.4.4.1)

Nominal strand diameter, $d_b := 0.375 \cdot in$ $A_p := 0.085 \cdot in^2$

(Trends now are toward the use of 3/8 in. diameter strand, per PCI J., 33(2), pp.67-109)

$f_{pu} := 270 \cdot ksi$

$f_{py} := 0.90 \cdot f_{pu}$ $f_{py} = 243\,ksi$

$f_{pe} := 0.80 \cdot f_{py}$ $f_{pe} = 194.4\,ksi$ @ service limit state after all losses (LRFD Table 5.9.3-1)

$E_p := 28500 \cdot ksi$

Design Method: LRFD

Mechanical shear ties on the top of panels are not required per PCI, special report, PCI J., 32(2), pp. 26-45.

Structure

Design span $L := 89.07 \cdot ft$

Roadway width $BW := 53.0 \cdot ft$ barrier face to barrier face

Girder spacing $S := 6.75 \cdot ft$

Skew angle $\theta := 14.65 \cdot deg$

no. of girder $N_b := 8$

curb width on deck, $cw := 10.5 \cdot in$

Deck overhang (CL. of exterior girder to end of deck) $overhang := \frac{BW - (N_b - 1) \cdot S}{2} + cw$ $overhang = 3.75\,ft$

slab design thickness $t_{s1} := 8.0 \cdot in$

for D.L. calculation $t_{s2} := 8.5 \cdot in$

Panel dimensions : $W_{sip} := 8.0 \cdot ft$ $L_{sip} := 6.34 \cdot ft$ $t_{sip} := 3.5 \cdot in$

CIP composite slab: $t_{cs1} := t_{s1} - t_{sip}$ $t_{cs1} = 4.5\,in$ (used for structural design)

$t_{cs2} := t_{s2} - t_{sip}$ $t_{cs2} = 5\,in$ (actual thickness)

$w_c := 0.160 \cdot kcf$

Future overlay (2" HMA), $w_{dw} := 0.140kcf \cdot 2in$ $w_{dw} = 0.023 \frac{kip}{ft^2}$

Minimum Depth and Cover (§9.7.1)

Min. Depth $if\left(t_{s2} \geq 7.0 \cdot in, "OK", "NG"\right) = "OK"$

Min. SIP thickness $if\left(0.55 \cdot t_{s2} > t_{sip} \geq 3.5 \cdot in, "OK", "NG"\right) = "OK"$

top cover for epoxy-coated main reinforcing steel = 1.5 in. (up to #11 bar)
= 2.0 in. (#14 & #18 bars) (§5.12.4 & Table 5.12.3-1)
bottom concrete cover (unprotected main reinforcing) = 1 in. (up to #11 bar)
= 2 in. (#14 & #18 bars)
sacrificial thickness = 0.5 in. (§2.5.2.4)

Optional deflection criteria for span-to-depth ratio (LRFD Table 2.5.2.6.3-1)

Min. Depth (continuous span) where $S = 6.75\,ft$ (slab span length):

$$if\left[\max\left(\left(\frac{S + 10 \cdot ft}{30}\right)\right) \leq t_{s1}, "OK", "NG"\right] = "OK" \qquad \max\left(\left(\frac{S + 10 \cdot ft}{30}\right)\right) = 6.7\,in$$

Skew Deck (§9.7.1.3)

$\theta \leq 25 \cdot deg = 1$ it true, the primary reinforcement may be placed in the direction of the skew; otherwise, it shall be placed perpendicular to the main supporting components.

Loads The precast SIP panels support their own weight, any construction loads, and the weight of the CIP slabs. For superimposed dead and live loads, the precast panels are analyzed assuming that they act compositely with the CIP concrete.

Dead load per foot

SIP panel $w_{sip} := t_{sip} \cdot w_c$ $w_{sip} = 0.047 \frac{kip}{ft^2}$

CIP slab $w_{cs} := t_{cs2} \cdot w_c$ $w_{cs} = 0.067 \frac{kip}{ft^2}$

Weight of one traffic barrier is $tb := 0.52 \cdot \frac{kip}{ft}$

Weight of one sidewalk is $tside := 0.52 \cdot \frac{kip}{ft}$

Wearing surface & construction loads

future wearing surface $w_{dw} = 0.023 \frac{kip}{ft^2}$

construction load (applied to deck panel only) $w_{con} := 0.050 \cdot \frac{kip}{ft}$ (§9.7.4.1)

Note that load factor for construction load is 1.5 (§3.4.2).

Live loads

(§3.6.1.3.3, not for empirical design method) Where deck is designed using the approximate strip method, specified in §4.6.2.1, the live load shall be taken as the wheel load of the 32.0 kip axle of the design truck, without lane load, where the strips are transverse.

$if(S \le 15 \cdot ft, "OK", "NG") = "OK"$ (§3.6.1.3.3)

Multiple presence factor: $M1 := 1.2$ $M2 := 1.0$ (§3.6.1.1.1.2)

Dynamic Load Allowance (impact) $IM := 0.33$ (§3.6.2.1)

Maximum factored moments **per unit width** based on Table A4-1: for $S = 6.75\ ft$

(include the effect of multiple presence factors and the dynamic load allowance)

applicability $if[min((0.625 \cdot S \quad 6 \cdot ft)) \ge overhang - cw, "OK", "NG"] = "OK"$

$if(N_b \ge 3, "OK", "NG") = "OK"$

$M_{LLp} := 5.10 \cdot \frac{kip \cdot ft}{ft}$

(§3.6.1.3.4) For deck overhang design with a cantilever, not exceeding 6.0 ft from the centerline of the exterior girder to the face of a continuous concrete railing, the wheel loads may be replaced with a uniformly distributed line load of 1.0 KLF intensity, located 1 ft from the face of the railing.

$if(overhang - cw \le 6 \cdot ft, "OK", "NG") = "OK"$

Load combination

Where traditional design based on flexure is used, the requirements for strength and service limit states shall be satisfied.
Extreme event limit state shall apply for the force effect transmitted from the bridge railing to bridge deck (§13.6.2).
Fatigue need not be investigated for concrete deck slabs in multi-girder applications (§5.5.3.1).

Strength Limit States

Load Modifier

$\eta_D := 1.00$ for conventional design (§1.3.3)

$\eta_R := 1.00$ for conventional level of redundancy (§1.3.4)

$\eta_I := 1.00$ for typical bridges (§1.3.5)

$\eta := \max\left(\begin{pmatrix} \eta_D \cdot \eta_R \cdot \eta_I \\ 0.95 \end{pmatrix}\right)$ $\eta = 1$ (§1.3.2)

Strength I load combination - normal vehicular load without wind (§3.4.1)

Load factors (LRFD Table 3.4.1-1&2):

$\gamma_{dc} := 1.25$ for component and attachments

$\gamma_{dw} := 1.50$ for DW

$\gamma_L := 1.75$ for LL

Section Properties

Non-composite section per foot

$A_{sip} := t_{sip} \cdot 12 \cdot in$ $A_{sip} = 42\,in^2$

$I_{sip} := \frac{12 \cdot in \cdot t_{sip}^{3}}{12}$ $I_{sip} = 42.875\,in^4$

$Y_{bp} := \frac{t_{sip}}{2}$ $Y_{bp} = 1.75\,in$

$Y_{tp} := t_{sip} - Y_{bp}$ $S_{tp} := \frac{I_{sip}}{Y_{tp}}$ $S_{bp} := \frac{I_{sip}}{Y_{bp}}$

$Y_{tp} = 1.75\,in$ $S_{tp} = 24.5\,in^3$ $S_{bp} = 24.5\,in^3$

$E_c := 33000 \cdot \left(\frac{w_c}{kcf}\right)^{1.5} \cdot \sqrt{\frac{f'_c}{ksi}} \cdot ksi$ $E_c = 4722.6\,ksi$ (§5.4.2.4)

$E_{ci} := 33000 \cdot \left(\frac{w_c}{kcf}\right)^{1.5} \cdot \sqrt{\frac{f'_{ci}}{ksi}} \cdot ksi$ $E_{ci} = 4224.0\,ksi$

Composite Section Properties (§4.6.2.6)

$E_{cs} := 33000 \cdot \left(\frac{w_c}{kcf}\right)^{1.5} \cdot \sqrt{\frac{f'_{cs}}{ksi}} \cdot ksi$ $E_{cs} = 4224.0\,ksi$ (§5.4.2.4)

modular ratio, $n := \sqrt{\frac{f'_c}{f'_{cs}}}$ $n = 1.118$

$b := 12 \cdot in$

$A_{slab} := \frac{b}{n} \cdot t_{cs1}$ $Y_{bs} := t_{sip} + \frac{t_{cs1}}{2}$ $AY_{bs} := A_{slab} \cdot Y_{bs}$

	Area	Y_b	$A \cdot Y_b$
CIP slab	$A_{slab} = 48.3\,in^2$	$Y_{bs} = 5.75\,in$	$A_{slab} \cdot Y_{bs} = 277.7\,in^3$
SIP panel	$A_{sip} = 42\,in^2$	$Y_{bp} = 1.75\,in$	$A_{sip} \cdot Y_{bp} = 73.5\,in^3$

$Y_b := \frac{A_{slab} \cdot Y_{bs} + A_{sip} \cdot Y_{bp}}{A_{slab} + A_{sip}}$ $Y_b = 3.89\,in$ @ bottom of panel

$Y_t := t_{sip} - Y_b$ $Y_t = -0.39\,in$ @ top of panel

$Y_{ts} := t_{sip} + t_{cs1} - Y_b$ $Y_{ts} = 4.11\,in$ @ top of slab

$I_{slabc} := A_{slab} \cdot \left(Y_{ts} - \frac{t_{cs1}}{2}\right)^2 + \frac{\left(\frac{b}{n}\right) \cdot t_{cs1}^{\,3}}{12}$ $I_{slabc} = 248.7\,in^4$

$I_{pc} := A_{sip} \cdot \left(Y_b - Y_{bp}\right)^2 + I_{sip}$ $I_{pc} = 235.1\,in^4$

$I_c := I_{slabc} + I_{pc}$ $I_c = 483.8\,in^4$

Section modulous of the composite section

$S_b := \frac{I_c}{Y_b}$ $S_b = 124.4\,in^3$ @ bottom of panel

$S_t := \frac{I_c}{|Y_t|}$ $S_t = 1242.1\,in^3$ @ top of panel

$S_{ts} := n \cdot \frac{I_c}{Y_{ts}}$ $S_{ts} = 131.6\,in^3$ @ top of slab

Required Prestress

Assume the span length conservatively as the panel length, $L_{sip} = 6.34\ ft$

$M_{sip} := \frac{w_{sip} \cdot L_{sip}^{\,2}}{8}$ $M_{sip} = 0.234\,\frac{ft \cdot kip}{ft}$

$M_{cip} := \frac{w_{cs} \cdot L_{sip}^{\,2}}{8}$ $M_{cip} = 0.335\,\frac{ft \cdot kip}{ft}$

For the superimposed dead and live loads, the force effects should be calculated based on analyzing the strip as a continuous beam supported by infinitely rigid supports (§4.6.2.1.6)

$M_{DW} := 0.10 \cdot \frac{ft \cdot kip}{ft}$

$M_b := 0.19 \cdot \frac{kip \cdot ft}{ft}$ (see Strudl s-dl output)

$f_b := \frac{(M_{sip} + M_{cip})ft}{S_{bp}} + \frac{(M_{DW} + M_b + M_{LLp}) \cdot ft}{S_b}$ $f_b = 0.799\,ksi$

Tensile Stress Limits

$0.190 \cdot \sqrt{\frac{f'_c}{ksi}} \cdot ksi = 0.42\,ksi$ (§5.9.4.2.2)

$0 \cdot ksi$ WSDOT design practice

Required precompression stress at bottom fiber,

$f_{creq} := f_b - 0 \cdot ksi$ $f_{creq} = 0.799\,ksi$

If P_{se} is the total effective prestress force after all losses, and the center of gravity of stands is concentric with the center of gravity of the SIP panel:

$P_{se} := f_{creq} \cdot W_{sip} \cdot t_{sip}$ $P_{se} = 268.43\,kip$ per panel

Assume stress at transfer,

$f_{pi} := 0.75 \cdot f_{pu}$ $f_{pi} = 202.5\,ksi$ (LRFD Table 5.9.3-1)

Assume 15% final losses, the final effective prestress,

$p_{se} := f_{pi} \cdot (1 - 0.15)$ $p_{se} = 172.12\,ksi$

The required number of strands, $N_{req} := \frac{P_{se}}{p_{se} \cdot A_p}$ $N_{req} = 18.35$ $N_p := ceil(N_{req})$

Try $N_p := 19$

Prestress Losses

Loss of Prestress (§5.9.5)

$\Delta f_{pT} = \Delta f_{pES} + \Delta f_{pLT}$

where, Δf_{pLT} = long-term prestress loss due to creep of concrete, shrinkage of concrete, and relaxation of steel.

steel relaxation at transfer (Office Practice)

Curing time for concrete to attain f'ci is approximately 12 hours: set $t := 0.75$ day

$f_{pj} := 0.75 \cdot f_{pu}$ $f_{pj} = 202.5\,ksi$ immediately prior to transfer+steel relax.

(LRFD Table 5.9.3-1)

$$\Delta f_{pR0} := \frac{\log(24.0 \cdot t)}{40.0} \cdot \left(\frac{f_{pj}}{f_{py}} - 0.55 \right) \cdot f_{pj}$$

$\Delta f_{pR0} = 1.80\,ksi$

Given: $A_p = 0.085\,in^2$

straight strands $N_p = 19$ jacking force, $f_{pj} \cdot N_p \cdot A_p = 327.04\,kip$

(note: these forces include initial prestress relaxation loss, see §C5.9.5.4.4b)

$A_{ps} := A_p \cdot N_p$ $A_{ps} = 1.615\,in^2$ per panel

$A_{psip} := A_{ps} \cdot \frac{ft}{W_{sip}}$ $A_{psip} = 0.202\,in^2$ per ft

c.g. of all strands to c.g. of girder, $e_p := 0 \cdot in$

Elastic Shortening, Δf_{pES} ***(§5.9.5.2.3a)***

f_{cgp}: concrete stress at c.g. of prestressing tendons due to the prestressing force immediately after transfer and the self-weight of the member at the sections of maximum moment.

Guess values: $p_{si} := 194.4 \cdot ksi$ prestress tendon stress at transfer (LRFD Table 5.9.3-1)

Given $\left(f_{pj} - \Delta f_{pR0} - p_{si}\right) \cdot \frac{E_{ci}}{E_p} = -\frac{-\left(p_{si} \cdot A_{psip}\right)}{A_{sip}}$ (note: used only when $e_p = 0$ in)

$p_{si} := \text{Find}(p_{si})$ $p_{si} = 194.4\,ksi$

$f_{cgp} := \frac{-\left[p_{si} \cdot \left(A_{psip}\right)\right]}{A_{sip}}$ $f_{cgp} = -0.93\,ksi$

$\Delta f_{pES} := f_{pj} - \Delta f_{pR0} - p_{si}$ $\Delta f_{pES} = 6.3\,ksi$

Approximate Estimate of Time Dependent Losses (§5.9.5.3)

Criteria: Normal-weight concrete
Concrete is either steam or moist cured
Prestressing is by low relaxation strands
Are sited in average exposure condition and temperatures

$H := 75$ the average annual ambient relative humidity (%)

$\gamma_h := 1.7 - 0.01H$ $\gamma_h = 0.95$

$\gamma_{st} := \frac{5}{1 + \frac{f'_{ci}}{ksi}}$ $\gamma_{st} = 1$

$\Delta f_{pR} := 2.5ksi$ an estimate of relaxation loss for low relaxation strand

Then,

$$\Delta f_{pLT} := 10.0\frac{f_{pi} \cdot A_{psip}}{A_{sip}} \cdot \gamma_h \cdot \gamma_{st} + (12.0ksi)\gamma_h \cdot \gamma_{st} + \Delta f_{pR} \qquad \Delta f_{pLT} = 23.1\,ksi$$

Total loss Δf_{pT},

$$\Delta f_{pT} := \Delta f_{pR0} + \Delta f_{pLT} + \Delta f_{pES} \qquad \Delta f_{pT} = 31.25\,ksi$$

$f_{pe} := f_{pj} - \Delta f_{pT}$ $f_{pe} = 171.25\,ksi$

$\text{if}\left(f_{pe} \le 0.80 \cdot f_{py}, \text{"OK"}, \text{"NG"}\right) = \text{"OK"}$ (LRFD Table 5.9.3-1)

$P_e := \frac{N_p \cdot A_p \cdot f_{pe}}{W_{sip}}$ $P_e = 34.57\frac{kip}{ft}$ per foot

Stresses in the SIP Panel at Transfer

Stress Limits for Concrete

Compression: $-0.60 \cdot f'_{ci} = -2.4\,ksi$

Tension: Allowable tension with bonded reinforcement which is sufficient to resist 120% of the tension force in the cracked concrete computed on the basis of an uncracked section (§5.9.4.1.2).

$$0.24 \cdot \sqrt{\frac{f'_{ci}}{ksi}} \cdot ksi = 0.48\,ksi$$

or w/o bonded reinforcement,

$$\min\left(\begin{pmatrix} 0.0948 \cdot \sqrt{\frac{f'_{ci}}{ksi}} \cdot ksi \\ 0.200 \cdot ksi \end{pmatrix}\right) = 0.19\,ksi \qquad \text{(Controls)}$$

Because the strand group is concentric with the precast concrete panel, the midspan section is the critical section that should be checked.

Stress at Midspan

Effective stress after transfer,

$$P_{si} := \frac{N_p \cdot A_p \cdot p_{si}}{W_{sip}} \qquad P_{si} = 39.244 \frac{kip}{ft}$$

Moment due to weight of the panel,

$$M_{sip} = 0.234 \frac{kip \cdot ft}{ft}$$

At top of the SIP panel,

$$\left(-\frac{M_{sip} \cdot ft}{S_{tp}} - \frac{P_{si} \cdot ft}{A_{sip}} \right) = -1.05\,ksi \qquad < \text{allowable} \quad -0.60 \cdot f'_{ci} = -2.4\,ksi \qquad \textbf{OK}$$

At bottom of the SIP panel,

$$\left(\frac{M_{sip} \cdot ft}{S_{bp}} - \frac{P_{si} \cdot ft}{A_{sip}} \right) = -0.82\,ksi \qquad < \text{allowable} \quad -0.60 \cdot f'_{ci} = -2.4\,ksi \qquad \textbf{OK}$$

Stresses in SIP Panel at Time of Casting Topping Slab

The total prestress after all losses,

$$P_e = 34.57 \frac{kip}{ft}$$

Stress Limits for Concrete

Flexural stresses due to unfactored construction loads shall not exceed 65% of the 28-day compressive strength for concrete in compression or the modulus of rupture in tension for prestressed concrete form panels (§9.7.4.1).

The construction load shall be taken to be less than the weight of the form and the concrete slab plus 0.050 KSF.

For load combination Service I:

Compression: $-0.65 \cdot f'_c = -3.25\,ksi$

Tension: Modulous of rupture,

$$f_r := 0.24 \cdot \sqrt{\frac{f'_c}{ksi}} \cdot ksi \qquad f_r = 0.54\,ksi$$

Stresses at Midspan after all Non-Composite Loads

$$M_{sip} = 0.23 \frac{ft \cdot kip}{ft}$$

$$M_{cip} = 0.33\ \frac{ft \cdot kip}{ft}$$

$$M_{const} := 0.050 \cdot \frac{kip}{ft^2} \cdot \frac{L_{sip}^{\ 2}}{8} \qquad M_{const} = 0.25\ \frac{ft \cdot kip}{ft}$$

At top of the SIP panel,

$$\left[-\frac{\left(M_{sip} + M_{cip} + M_{const}\right) \cdot ft}{S_{tp}} - \frac{P_e \cdot ft}{A_{sip}} \right] = -1.23\ ksi \quad < \text{allowable} \quad -0.65 \cdot f'_c = -3.25\ ksi \qquad \textbf{OK}$$

At bottom of the SIP panel,

$$\left[\frac{\left(M_{sip} + M_{cip} + M_{const}\right) \cdot ft}{S_{bp}} - \frac{P_e \cdot ft}{A_{sip}} \right] = -0.42\ ksi \quad < \text{allowable} \quad -0.65 \cdot f'_c = -3.25\ ksi \qquad \textbf{OK}$$

Elastic Deformation (§9.7.4.1)

Deformation due to

$$\Delta := \frac{5}{48} \cdot \frac{\left(M_{sip} + M_{cip}\right) \cdot ft \cdot L_{sip}^{\ 2}}{E_c \cdot I_{sip}} \qquad \Delta = 0.02\ in$$

$$\text{if}\left[\Delta \le \left\| \begin{array}{l} \min\left(\left(\frac{L_{sip}}{180} \quad 0.25 \cdot in\right)\right) \quad \text{if } L_{sip} \le 10 \cdot ft \quad , \text{"OK"} , \text{"NG"} \\ \min\left(\left(\frac{L_{sip}}{240} \quad 0.75 \cdot in\right)\right) \quad \text{otherwise} \end{array} \right. \right] = \text{"OK"}$$

Stresses in SIP Panel at Service Loads

Compression:

- Stresses due to permanent loads

  $-0.45 \cdot f'_c = -2.25\ ksi$ for SIP panel

  $-0.45 \cdot f'_{cs} = -1.8\ ksi$ for CIP panel

- Stresses due to permanent and transient loads

  $-0.60 \cdot f'_c = -3\ ksi$ for SIP panel

  $-0.60 \cdot f'_{cs} = -2.4\ ksi$ for CIP panel

- Stresses due to live load + one-half of the permanent loads

  $-0.40 \cdot f'_c = -2\ ksi$ for SIP panel

  $-0.40 \cdot f'_{cs} = -1.6\ ksi$ for CIP panel

Tension:

$$0.0948\cdot\sqrt{\frac{f'_c}{ksi}}\cdot ksi = 0.21\,ksi \qquad (\S 5.9.4.2.2)$$

$0\cdot ksi$ WSDOT design practice

Service Load Stresses at Midspan

- *Compressive stresses at top of CIP slab*

  Stresses due to permanent load + prestressing

$$-\frac{(M_{DW} + M_b)\cdot ft}{S_{ts}} = -0.026\,ksi \qquad < \text{allowable} \quad -0.45\cdot f'_{cs} = -1.8\,ksi \qquad \textbf{OK}$$

  Stresses due to permanent and transient loads,

$$-\frac{(M_{DW} + M_b + M_{LLp})\cdot ft}{S_{ts}} = -0.49\,ksi \qquad < \text{allowable} \qquad -0.60\cdot f'_{cs} = -2.4\,ksi \qquad \textbf{OK}$$

- *Compressive stresses at top of the SIP panel*

  Stresses due to permanent load + prestressing

$$-\frac{P_e\cdot ft}{A_{sip}} - \frac{(M_{sip} + M_{cip})\cdot ft}{S_{tp}} - \frac{(M_{DW} + M_b)\cdot ft}{S_t} = -1.1\,ksi \qquad < \text{allowable} \quad -0.45\cdot f'_c = -2.25\,ksi \qquad \textbf{OK}$$

  Stresses due to permanent and transient loads,

$$-\frac{P_e\cdot ft}{A_{sip}} - \frac{(M_{sip} + M_{cip})\cdot ft}{S_{tp}} - \frac{(M_{DW} + M_b + M_{LLp})\cdot ft}{S_t} = -1.15\,ksi \qquad < \text{allowable} \quad -0.60\cdot f'_c = -3\,ksi \quad \textbf{OK}$$

  Stresses due to live load + one-half the sum of effective prestress and permanent loads,

$$-0.5\cdot\left(\frac{P_e\cdot ft}{A_{sip}}\right) - \frac{0.5\cdot(M_{sip} + M_{cip})\cdot ft}{S_{tp}} - \frac{(0.5\cdot M_{DW} + 0.5\cdot M_b + M_{LLp})\cdot ft}{S_t} = -0.6\,ksi$$

$$< \text{allowable} \quad -0.40\cdot f'_c = -2\,ksi \qquad \textbf{OK}$$

- *Tensile stresses at bottom of the SIP panel*

  Stresses due to permanent and transient loads,

$$-\frac{P_e\cdot ft}{A_{sip}} + \frac{(M_{sip} + M_{cip})\cdot ft}{S_{bp}} + \frac{(M_{DW} + M_b + M_{LLp})\cdot ft}{S_b} = -0.02\,ksi$$

$$< \text{allowable} \qquad 0.0948\cdot\sqrt{\frac{f'_c}{ksi}}\cdot ksi = 0.21\,ksi \qquad \textbf{OK}$$

$0\cdot ksi$ (BDM)

Flexural Strength of Positive Moment Section

Resistance factors (§5.5.4.2.1)

$\phi_f := 0.90$ for flexure and tension of reinforced concrete

$\phi_p := 1.00$ for flexure and tension of prestressed concrete

$\phi_v := 0.90$ for shear and torsion

Ultimate Moment Required for Strength I

Dead load moment,

$M_{DC} := M_{sip} + M_{cip} + M_b$ $\quad M_{DC} = 0.76 \frac{kip \cdot ft}{ft}$

Wearing surface load moment,

$M_{DW} = 0.1 \frac{kip \cdot ft}{ft}$

Live load moment,

$M_{LLp} = 5.1 \frac{kip \cdot ft}{ft}$

$M_u := \eta \cdot (\gamma_{dc} \cdot M_{DC} + \gamma_{dw} \cdot M_{DW} + \gamma_L \cdot M_{LLp})$ $\quad M_u = 10.02 \frac{kip \cdot ft}{ft}$

Flexural Resistance (§5.7.3)

Find stress in prestressing steel at nominal flexural resistance, f_{ps} (§5.7.3.1.1)

$f_{pe} = 171.249\,ksi$ $\quad 0.5 \cdot f_{pu} = 135\,ksi$

$if(f_{pe} \geq 0.5 \cdot f_{pu}, "OK", "NG") = "OK"$

$k := 2 \cdot \left(1.04 - \frac{f_{py}}{f_{pu}}\right)$ $\quad k = 0.28$ (LRFD Eq. 5.7.3.1.1-2)

$A_s := 0 \cdot in^2$

$A'_s := 0 \cdot in^2$ (conservatively)

d_p, distance from extreme compression fiber to the centroid of the prestressing tendons,

$d_p := t_{s1} - 0.5 \cdot t_{sip}$ $\quad d_p = 6.25\,in$

$W_{sip} = 96\,in$ effective width of compression flange

$\beta_1 := if\left[f'_{cs} \leq 4 \cdot ksi, 0.85, 0.85 - 0.05 \cdot \left(\frac{f'_{cs} - 4.0 \cdot ksi}{1.0 \cdot ksi}\right)\right]$ $\quad \beta_1 := \begin{cases} \beta_1 & \text{if } \beta_1 \geq 0.65 \\ 0.65 & \text{otherwise} \end{cases}$

$\beta_1 = 0.85$ (§5.7.2.2)

Assume rectangular section,

$$c := \frac{A_{ps} \cdot f_{pu}}{0.85 \cdot f'_{cs} \cdot \beta_1 \cdot W_{sip} + k \cdot A_{ps} \cdot \frac{f_{pu}}{d_p}} \qquad c = 1.47\,in$$

Stress in prestressing steel at nominal flexural resistance, f_{ps} (§5.7.3.1.1),

$$f_{ps} := f_{pu} \cdot \left(1 - k \cdot \frac{c}{d_p}\right) \qquad f_{ps} = 252.24\,ksi$$

Check stress in prestressing steel according to available development length, l_d

Available development length at midspan of the SIP panel,

$$l_d := 0.5 \cdot L_{sip} \qquad l_d = 3.17\ ft$$

rearranging LRFD eq. 5.11.4.1-1

$$f_{psld} := \frac{l_d}{1.6 \cdot d_b} \cdot ksi + \frac{2}{3} \cdot f_{pe} \qquad f_{psld} = 177.57\,ksi \qquad \text{(may be too conservative)}$$

$$f_{ps} := \min\left(\left(f_{ps} \quad f_{psld}\right)\right) \qquad f_{ps} = 177.57\,ksi$$

Flexural Resistance (§5.7.3.2.2 & 5.7.3.2.2),

$$a := \beta_1 \cdot c \qquad a = 1.25\,in \qquad A_{ps} = 1.615\,in^2 \quad \text{per panel}$$

$$M_n := A_{ps} \cdot f_{ps} \cdot \left(d_p - \frac{a}{2}\right)$$

$$M_n = 134.4\,kip \cdot ft$$

$$M_r := \phi_p \cdot M_n \qquad M_r = 134.4\,kip \cdot ft \qquad \text{per panel}$$

$$M_r := \frac{M_r}{W_{sip}} \qquad M_r = 16.81\,\frac{kip \cdot ft}{ft} \qquad \text{per ft}$$

$$M_u \le M_r = 1 \qquad \textbf{OK} \qquad \text{where} \qquad M_u = 10.02\,\frac{kip \cdot ft}{ft}$$

Limits of Reinforcement

Minimum Reinforcement (§5.7.3.3.2)

Compressive stress in concrete due to effective prestress force (after all losses) at midspan

$$f_{peA} := \frac{P_e \cdot ft}{A_{sip}} \qquad f_{peA} = 0.82\,ksi \qquad \text{(compression)}$$

Non-composite dead load moment at section, M_{dnc},

$M_{dnc} := M_{cip} + M_{sip}$ $M_{dnc} = 0.57 \frac{kip \cdot ft}{ft}$

$f_r = 0.54\,ksi$ use SIP panel

$M_{cr} := \left(f_r + f_{peA}\right) \cdot \frac{S_b}{ft} - M_{dnc} \cdot \left(\frac{S_b}{S_{bp}} - 1\right)$ $1.2 \cdot M_{cr} = 14.13 \frac{kip \cdot ft}{ft}$

$M_r \geq 1.2 \cdot M_{cr} = 1$ **OK** where $M_r = 16.81 \frac{kip \cdot ft}{ft}$

Negative Moment Section Over Interior Beams

Deck shall be subdivided into strips perpendicular to the supporting components (§4.6.2.1.1).
Continuous beam with span length as center to center of supporting elements (§4.6.2.1.6).
Wheel load may be modeled as concentrated load or load based on tire contact area.
Strips should be analyzed by classical beam theory.

Spacing in secondary direction (spacing between diaphragms):

$L_d := \frac{L}{1.0}$ $L_d = 89.07\ ft$

Spacing in primary direction (spacing between girders):

$S = 6.75\ ft$

Since $\frac{L_d}{S} \geq 1.50 = 1$, where $\frac{L_d}{S} = 13.2$ (§4.6.2.1.5)

therefore, all the wheel load shall be applied to primary strip. Otherwise, the wheels shall be distributed between intersecting strips based on the stiffness ratio of the strip to sum of the strip stiffnesses of intersecting strips.

Critical Section

The design section for negative moments and shear forces may be taken as follows:

Prestressed girder - shall be at 1/3 of flange width < 15 in.

Steel girder - 1/4 of flange width from the centerline of support.

Concrete box beams - at the face of the web.

top flange width $b_f := 15.06 \cdot in$

Design critical section for negative moment and shear shall be at d_c, (§4.6.2.1.6)

$d_c := \min\left(\left(\frac{1}{3} \cdot b_f \quad 15 \cdot in\right)\right)$ $d_c = 5\ in$ from CL of girder (may be too conservative, see training notes)

Maximum factored moments **per unit width** based on Table A4-1: for $S = 6.75\ ft$

(include multiple presence factors and the dynamic load allowance)

applicability $\text{if}[\min((0.625\cdot S\ \ 6\cdot ft)) \geq \text{overhang} - cw, \text{"OK"}, \text{"NG"}] = \text{"OK"}$

$\text{if}(N_b \geq 3, \text{"OK"}, \text{"NG"}) = \text{"OK"}$

$M_{LLn} := 4.00\cdot\frac{kip\cdot ft}{ft}$ (max. -M at d_c from CL of girder)

Dead load moment (STRUDL s-dl output)

$M_{DCn} := 0.18\cdot\frac{kip\cdot ft}{ft}$ (dead load from deck overhang and sidl only, max. -M at d_c at interior girder, conservative) $\frac{d_c}{S} = 0.062$

$M_{DWn} := 0.10\cdot\frac{kip\cdot ft}{ft}$

Service negative moment

$M_{sn} := M_{DCn} + M_{DWn} + M_{LLn}$ $M_{sn} = 4.28\frac{kip\cdot ft}{ft}$

Factored negative moment

$M_{un} := \eta\cdot(\gamma_{dc}\cdot M_{DCn} + \gamma_{dw}\cdot M_{DWn} + \gamma_L\cdot M_{LLn})$ $M_{un} = 7.38\frac{kip\cdot ft}{ft}$

Design of Section

Normal flexural resistance of a rectangular section may be determined by using equations for a flanged section in which case b_w shall be taken as b (§5.7.3.2.3).

$\beta_1 := \text{if}\left[f'_{cs} \leq 4\cdot ksi, 0.85, 0.85 - 0.05\cdot\left(\frac{f'_{cs} - 4.0\cdot ksi}{1.0\cdot ksi}\right)\right]$ $\beta_1 := \begin{cases}\beta_1 & \text{if } \beta_1 \geq 0.65\\ 0.65 & \text{otherwise}\end{cases}$

$\beta_1 = 0.85$ (§5.7.2.2) conservatively use CIP slab concrete strength

assume bar # $bar_n := 5$

$$dia(bar) := \begin{cases}0.5\cdot in & \text{if } bar = 4\\ 0.625\cdot in & \text{if } bar = 5\\ 0.75\cdot in & \text{if } bar = 6\\ 0.875\cdot in & \text{if } bar = 7\end{cases}$$

$d_n := t_{s2} - 2.5\cdot in - \frac{dia(bar_n)}{2}$ $d_n = 5.69\ in$

$$A_s := \frac{0.85 \cdot f'_{cs} \cdot ft}{f_y} \cdot \left(d_n - \sqrt{d_n^{\,2} - \frac{2 \cdot M_{un} \cdot ft}{0.85 \cdot \phi_f \cdot f'_{cs} \cdot ft}} \right) \qquad A_s = 0.3\,in^2 \qquad \text{per ft}$$

use (top-transverse) bar # $bar_n = 5$ $s_n := 9 \cdot in$

$$A_b(bar) := \begin{cases} 0.20 \cdot in^2 & \text{if } bar = 4 \\ 0.31 \cdot in^2 & \text{if } bar = 5 \\ 0.44 \cdot in^2 & \text{if } bar = 6 \\ 0.60 \cdot in^2 & \text{if } bar = 7 \end{cases}$$

$$A_{sn} := A_b(bar_n) \cdot \frac{1 \cdot ft}{s_n} \qquad A_{sn} = 0.41\,in^2 \qquad \text{per ft}$$

Maximum Reinforcement (§5.7.3.3.1)

The max. amount of prestressed and non-prestressed reinforcement shall be such that

where $d_e := d_n$

$$c := \frac{A_{sn} \cdot f_y}{0.85 \cdot \beta_1 \cdot f'_{cs} \cdot 1 \cdot ft} \qquad c = 0.72\,in$$

$$\text{if}\left(\frac{c}{d_e} \le 0.42, \text{"OK"}, \text{"NG"} \right) = \text{"OK"} \qquad \frac{c}{d_e} = 0.126$$

The section is not over-reinforced. Over-reinforced reinforced concrete sections shall not be permitted.

Minimum Reinforcement (§5.7.3.3.2)

$$f_{rs} := 0.24 \cdot \sqrt{\frac{f'_{cs}}{ksi}} \cdot ksi \qquad f_{rs} = 0.48\,ksi$$ use SIP panel concrete strength

$$n := \frac{E_s}{E_{cs}} \qquad n = 6.866 \qquad n := \max[[\,\text{ceil}((n - 0.495)) \quad 6\,]]$$

$n = 7$ set $n = 7$ (round to nearest integer, §5.7.1, not less than 6)

$(n - 1)A_{sn} = 2.48\,in^2$

$A_{gc} := t_{s2} \cdot ft \qquad A_{gc} = 102\,in^2$

$d_s := 2.5in + 0.625 \cdot in + 0.5 \cdot 0.75 \cdot in$ c.g. of reinforcement to top of slab $d_s = 3.5\,in$

$$Y_{ts} := \frac{A_{gc} \cdot 0.5 \cdot t_{s2} + (n - 1) \cdot A_{sn} \cdot d_s}{A_{gc} + (n - 1) \cdot A_{sn}} \qquad Y_{ts} = 4.23\,in$$

$$I_{cg} := \frac{ft \cdot t_{s2}^{3}}{12} + A_{gc} \cdot \left(0.5 \cdot t_{s2} - Y_{ts}\right)^2 + (n-1) A_{sn} \cdot \left(Y_{ts} - d_s\right)^2 \qquad I_{cg} = 615.49\,in^4$$

$$M_{cr} := \frac{f_{rs} \cdot I_{cg}}{Y_{ts}} \qquad M_{cr} = 5.817\,kip \cdot ft \qquad 1.2 \cdot M_{cr} = 6.98\,kip \cdot ft$$

$$if\left(M_{un} \cdot ft \geq 1.2 \cdot M_{cr}, "OK", "NG"\right) = "OK"$$

Crack Control (§5.7.3.4)

$\gamma_e := 0.75$ for Class 2 exposure condition for deck (assumed)

$$d_c := 2.0 \cdot in + 0.5 \cdot dia\left(bar_n\right) \qquad d_c = 2.31\,in$$

$$h := t_{s1} \qquad h = 8\,in$$

$$\beta_s := 1 + \frac{d_c}{0.7\left(h - d_c\right)} \qquad \beta_s = 1.581$$

$$M_{sn} = 4.28\,\frac{kip \cdot ft}{ft}$$

$$n := \frac{E_s}{E_{cs}} \qquad n = 6.866 \qquad n := ceil((n - 0.495)) \qquad \text{use slab concrete strength}$$

set $n = 7$ (round to nearest integer, §5.7.1)

$$\rho := \frac{A_{sn}}{ft \cdot d_n} \qquad \rho = 6.056 \times 10^{-3}$$

$$k(\rho) := \sqrt{(\rho \cdot n)^2 + 2 \cdot \rho \cdot n} - \rho \cdot n \qquad k(\rho) = 0.252$$

$$j(\rho) := 1 - \frac{k(\rho)}{3} \qquad j(\rho) = 0.916$$

$$f_{sa} := \frac{M_{sn} \cdot ft}{A_{sn} \cdot j(\rho) \cdot d_n} \qquad f_{sa} = 23.85\,ksi$$

$$if\left(s_n \leq \frac{700 \cdot \gamma_e \cdot in}{\beta_s \cdot \frac{f_{sa}}{ksi}} - 2 \cdot d_c, "OK", "NG"\right) = "OK" \qquad \text{where} \qquad s_n = 9\,in \qquad \frac{700 \cdot \gamma_e \cdot in}{\beta_s \cdot \frac{f_{sa}}{ksi}} - 2 \cdot d_c = 9.3\,in$$

Shrinkage and Temperature Reinforcement (§5.10.8.2)

For components less than 48 in. thick,

where $A_g := t_{s2} \cdot 1 \cdot ft$

$$A_{tem} := 0.11 \cdot \frac{A_g \cdot ksi}{f_y} \qquad A_{tem} = 0.19\,in^2 \quad \text{per ft}$$

The spacing of this reinforcement shall not exceed $3 \cdot t_{s1} = 24\,in$ or 18 in.

top longitudinal - $bar := 4$ $s := 12 \cdot in$ $A_s := A_b(bar) \cdot \frac{1 \cdot ft}{s}$ $A_s = 0.2\,in^2$ per ft **OK**

Distribution of Reinforcement (§9.7.3.2)

The effective span length S_{eff} shall be taken as (§9.7.2.3):

web thickness $b_w := 7 \cdot in$

top flange width $b_f = 15.06\,in$

$$S_{eff} := S - b_f + \frac{b_f - b_w}{2} \qquad S_{eff} = 5.83\,ft$$

For primary reinforcement perpendicular to traffic:

$$percent := \min\left(\left(\frac{220}{\sqrt{\frac{S_{eff}}{ft}}} \quad 67\right)\right) \qquad percent = 67$$

Bottom longitudinal reinforcement (convert to equivalent mild reinforcement area):

$$A_s := \frac{percent}{100} \cdot \frac{A_{ps}}{W_{sip}} \cdot \frac{f_{py}}{f_y} \qquad A_s = 0.55 \frac{in^2}{ft} \quad \text{per ft}$$

use bar # $bar := 5$ $s := 6.0 \cdot in$ $A_s := A_b(bar) \cdot \frac{1 \cdot ft}{s}$ $A_s = 0.62\,in^2$ per ft **OK**

Maximum bar spacing (§5.10.3.2)

Unless otherwise specified, the spacing of the primary reinforcement in walls and slabs shall not exceed 1.5 times the thickness of the member or 18 in.. The maximum spacing of temperature shrinkage reinforcement shall be as specified in §5.10.8.

$1.5 \cdot t_{s1} = 12\,in$ **OK**

Protective Coating (§5.12.4)

Epoxy coated reinforcement shall be used for slab top layer reinforcements except when the slab is overlayed with HMA.

W35DG Deck Bulb Tee, 48" Wide

Flexural Design Example, LRFD 2005

Units

$kip := 1000lb$

$ksi := \frac{kip}{in^2}$

$kcf := \frac{kip}{ft^3}$

1.0 Material Properties

Precast Concrete

$f_c := 8.0ksi$ $\rho := 0.160kcf$

$f_{ci} := 6.0ksi$ $\mu := 0.2$

$E_c := 33000ksi \cdot \left(\frac{\rho}{kcf}\right)^{\frac{3}{2}} \cdot \sqrt{\frac{f_c}{ksi}}$ $E_c = 5974\ ksi$

$E_{ci} := 33000ksi \cdot \left(\frac{\rho}{kcf}\right)^{\frac{3}{2}} \cdot \sqrt{\frac{f_{ci}}{ksi}}$ $E_{ci} = 5173\ ksi$

Rupture Modulus

$f_r := 0.24ksi \cdot \sqrt{\frac{f_c}{ksi}}$ $f_r = 0.679\ ksi$

Prestressing Steel (low-relaxation)

$f_{pu} := 270ksi$

$f_{py} := 243ksi$

$E_p := 28500ksi$

$A_{strand} := 0.217in^2$

$d_{strand} := 0.6in$

$n := \frac{E_p}{E_c}$

2.0 Geometric Properties

Span Length (bearing to bearing)

$L := 85ft$

Top flange width (i.e. girder spacing)

$b := 48in$ $t_s := 6in$

Section depth

$h := 35in$

Gross area (used for dead weight calculations)

$A_g := 669in^2$

Section Properties

$y_b := 20.9in$

$I_g := 100096in^4$

$I_p := 169341in^4$

$J := 29572in^4$

$S_b := \frac{I_g}{y_b}$ $S_b = 4789\,in^3$

$S_t := \frac{I_g}{(h - y_b)}$ $S_t = 7099\,in^3$

3.0 Permanent Loads

DC: Girder self-weight

$w_{dl} := A_g \cdot \rho$ $w_{dl} = 0.743 \frac{kip}{ft}$

DC: Diaphragms (at 1/3 points)

$P_{dia} := 8in \cdot (b - 6in) \cdot (h - 12in) \cdot \rho$ $P_{dia} = 0.716\,kip$

DC: Traffic Barriers (1/3 of F-shape)

$w_{sdl} := \frac{0.450}{3} \frac{kip}{ft}$ $w_{sdl} = 0.150 \frac{kip}{ft}$

DW:Overlay (3" ACP)

$w_{dw} := 3in \cdot b \cdot 0.140kcf$ $w_{dw} = 0.140 \frac{kip}{ft}$

4.0 Live Loads

HL-93 loading is travelling in 2 traffic lanes; for the maximum force effect taken at midspan:

$M_{HL} := \left(0.08 \cdot L^2 + 24 \cdot L \cdot ft - \frac{1120}{3} \cdot ft^2\right) \cdot \frac{kip}{ft}$ $M_{HL} = 2245\,kip \cdot ft$

this includes a 33% dynamic load allowance and a multiple presence factor of 1.0

Live Load Distribution Factor (design for interior beam):

Number of lanes

$N_L := 2$

From AASHTO Table 4.6.2.2.2b-1

$e_g := h - y_b - \frac{t_s}{2}$ $e_g = 11.100\,in$

$K_g := \left(I_g + A_g \cdot e_g^2\right)$ $K_g = 182523\,in^4$

The moment distribution factor is:

$g_{LL} := 0.075 + \left(\frac{b}{9.5ft}\right)^{0.6} \cdot \left(\frac{b}{L}\right)^{0.2} \cdot \left(\frac{K_g}{12L \cdot t_s^3}\right)^{0.1}$ $g_{LL} = 32.2\%$

5.0 Flexural Load Combinations

DC; Component load effects

$$M_{dl} := \frac{w_{dl}}{8} \cdot L^2 \qquad M_{dl} = 671\,kip \cdot ft$$

$$M_{sdl} := \frac{w_{sdl}}{8} \cdot L^2 + \frac{P_{dia}}{3} \cdot L \qquad M_{sdl} = 156\,kip \cdot ft$$

$$M_{DC} := M_{dl} + M_{sdl} \qquad M_{DC} = 827\,kip \cdot ft$$

Dead load moment at harping point (for stress at release)

$$M_{harp} := \frac{3 \cdot w_{dl} L^2}{25} \quad \textit{(at 0.4L point)} \qquad M_{harp} = 644\,kip \cdot ft$$

DW; Overlay load effects

$$M_{DW} := \frac{w_{dw}}{8} \cdot L^2 \qquad M_{DW} = 126\,kip \cdot ft$$

LL+I; Live load effects

$$M_{LL} := g_{LL} \cdot M_{HL} \qquad M_{LL} = 723\,kip \cdot ft$$

Conservatively, the design moment will be the maximum dead and live load moments at midspan

Service I

$$M_{serviceI} := M_{DC} + M_{DW} + M_{LL} \qquad M_{serviceI} = 1677\,kip \cdot ft$$

Service III

$$M_{serviceIII} := M_{DC} + M_{DW} + 0.8 \cdot M_{LL} \qquad M_{serviceIII} = 1532\,kip \cdot ft$$

Strength I

$$M_u := 1.25 \cdot M_{DC} + 1.5 \cdot M_{DW} + 1.75 M_{LL} \qquad M_u = 2489\,kip \cdot ft$$

6.0 Prestress Layout

Prestressed strand layout:

$N_{st} := 16$

$N_{harp} := 6$

$F_o := 9in$

$$F_{cl} := \begin{cases} (4.0in) & \text{if } N_{harp} \le 12 \\ \left[\frac{12 \cdot 4.0in + (N_{harp} - 12) \cdot 8.0in}{N_{harp}}\right] & \text{if } N_{harp} > 12 \end{cases} \qquad F_{cl} = 4.00\,in$$

$$E := \begin{cases} 2 \cdot in & \text{if } N_{st} \le 10 \\ \left[4 \cdot in \cdot \frac{(N_{st} - 5)}{N_{st}}\right] & \text{if } 10 < N_{st} \le 18 \\ \frac{(6 \cdot in \cdot N_{st} - 56 \cdot in)}{N_{st}} & \text{if } 18 < N_{st} \le 22 \\ \left[4 \cdot in \cdot \frac{(N_{st} - 3)}{N_{st}}\right] & \text{if } 22 < N_{st} \le 24 \\ \left[6 \cdot in \cdot \frac{(N_{st} - 10)}{N_{st}}\right] & \text{if } 24 < N_{st} \le 26 \end{cases} \qquad E = 2.75\,in$$

Distance to the prestressing steel C.G. measured from the bottom of the girder at midspan:

$A_{harp} := A_{strand} \cdot N_{harp}$

$A_{st} := A_{strand} \cdot N_{st}$

$A_{ps} := A_{st} + A_{harp}$

$N_{strand} := N_{harp} + N_{st}$ $\qquad A_{ps} = 4.774\,in^2$

$$y_{bps} := \frac{N_{harp} \cdot F_{cl} + N_{st} \cdot E}{N_{strand}} \qquad y_{bps} = 3.091\,in$$

Which gives a midspan strand eccentricity:

$e := y_b - y_{bps}$ $e = 17.8\,in$

The prestressing geometry at end of girder is:

Transfer Length

$l_t := 60 \cdot d_{strand}$ $l_t = 36.0\,in$

Self-weight moment at transfer point

$M_{lt} := w_{dl} \cdot \frac{l_t \cdot (L - l_t)}{2}$ $M_{lt} = 91\,kip \cdot ft$

Prestress offset of harped strands at bottom of girder end

$y_{bhend} := h - F_o$ $y_{bhend} = 26.0\,in$

Prestress offset at transfer point

Offset of harped strands from girder bottom

$y_{bhlt} := y_{bhend} - \frac{l_t}{0.4L} \cdot (y_{bhend} - F_{cl})$ $y_{bhlt} = 24.1\,in$

Offset of the C.G. of all strands from girder bottom

$y_{bslt} := \frac{y_{bhlt} \cdot N_{harp} + E \cdot N_{st}}{N_{strand}}$ $y_{bslt} = 8.6\,in$

Prestress eccentricity at transfer point

$e_{lt} := y_b - y_{bslt}$ $e_{lt} = 12.3\,in$

:

7.0 Prestress Force and Losses

Jacking PS force:

$f_{pi} := 0.75 \cdot f_{pu}$

$P_{jack} := A_{ps} \cdot f_{pi}$ $P_{jack} = 967\,kip$

Estimate of initial PS force after release, P_{sr} :

$P_{si} := 0.69 \cdot f_{pu} \cdot A_{ps}$ $P_{si} = 889\,kip$

Elastic Shortening Losses

$$f_{cgp} := \left(\frac{P_{si}}{A_g}\right) + \left(P_{si} \cdot \frac{e^2}{I_g}\right) - \left(M_{dl} \cdot \frac{e}{I_g}\right) \qquad f_{cgp} = 2.714\,ksi$$

$$\Delta f_{pES} := \left(\frac{E_p}{E_{ci}}\right) \cdot f_{cgp} \qquad \Delta f_{pES} = 14.95\,ksi$$

Steel Relaxation Losses (for low-relaxation strands)

$t := 1$ *(days before transfer)*

$$\Delta f_R := \frac{\log(24 \cdot t)}{40} \cdot \left(\frac{f_{pi}}{f_{pu}} - 0.55\right) f_{pi} \qquad \Delta f_R = 1.40\,ksi$$

$\Delta f_{pinstant} := \Delta f_{pES} + \Delta f_R$ $\Delta f_{pinstant} = 16.4\,ksi$

Release PS force

$P_{sr} := \left(f_{pi} - \Delta f_{pinstant}\right) \cdot A_{ps}$ $\boxed{P_{sr} = 889\,kip}$

Time Dependent Losses (for low-relaxation strands)

$\Delta f_{td} := 33ksi \cdot \left[1 - 0.15 \cdot \frac{\left(f_c - 6ksi\right)}{6ksi}\right] + 6ksi - 8ksi$ $\Delta f_{td} = 29.35\,ksi$

Total prestress loss

$\Delta f_{total} := \Delta f_{pinstant} + \Delta f_{td}$ $\Delta f_{total} = 45.70\,ksi$

Effective PS force

$P_{se} := \left(f_{pi} - \Delta f_{total}\right) \cdot A_{ps}$ $\boxed{P_{se} = 749\,kip}$

8.0 Concrete Stresses at Release

Allowable stresses:

Compression:

$0.6 \cdot f_{ci} = 3.600\,ksi$

Tension:

$\max\left(-0.2ksi, -\sqrt{f_{ci} \cdot ksi}\right) = -0.200\,ksi$

Stress at transfer point:

$f_{tlt} := P_{sr} \cdot \left(\frac{1}{A_g} - \frac{e_{lt}}{S_t}\right) + \frac{M_{lt}}{S_t}$ $f_{tlt} = -0.06\,ksi$ **OK**

$$f_{blt} := P_{sr}\cdot\left(\frac{1}{A_g} + \frac{e_{lt}}{S_b}\right) - \frac{M_{lt}}{S_b} \qquad f_{blt} = 3.39\,ksi \qquad \textbf{OK}$$

Stress at harp point:

$$f_{tharp} := P_{sr}\cdot\left(\frac{1}{A_g} - \frac{e}{S_t}\right) + \frac{M_{harp}}{S_t} \qquad f_{tharp} = 0.19\,ksi \qquad \textbf{OK}$$

$$f_{bharp} := P_{sr}\cdot\left(\frac{1}{A_g} + \frac{e}{S_b}\right) - \frac{M_{harp}}{S_b} \qquad f_{bharp} = 3.02\,ksi \qquad \textbf{OK}$$

9.0 Concrete and Steel Stresses at Service

Allowable concrete stress at midpsan

Compression; Cases I, II, and III:

$0.45\cdot f_c = 3.600\,ksi$ *(Under total dead load)*

$0.4\cdot f_c = 3.200\,ksi$ *(Under half of permanent loads and full live load)*

$0.6\cdot f_c = 4.800\,ksi$ *(Under full Service I load)*

Tension (per BDM):

0ksi *(Tension check under Service III load)*

Concrete stress at midspan:

$$f_{tI} := P_{se}\cdot\left(\frac{1}{A_g} - \frac{e}{S_t}\right) + \frac{M_{DC} + M_{DW}}{S_t} \qquad f_{tI} = 0.85\,ksi \qquad \textbf{OK}$$

$$f_{tII} := \frac{1}{2}\cdot\left[P_{se}\cdot\left(\frac{1}{A_g} - \frac{e}{S_t}\right) + \left(\frac{M_{DC} + M_{DW}}{S_t}\right)\right] + \frac{M_{LL}}{S_t} \qquad f_{tII} = 1.65\,ksi \qquad \textbf{OK}$$

$$f_{tIII} := P_{se}\cdot\left(\frac{1}{A_g} - \frac{e}{S_t}\right) + \frac{M_{serviceI}}{S_t} \qquad f_{tIII} = 2.08\,ksi \qquad \textbf{OK}$$

$$f_b := P_{se}\cdot\left(\frac{e}{S_b} + \frac{1}{A_g}\right) - \left(\frac{M_{serviceIII}}{S_b}\right) \qquad f_b = 0.06\,ksi \qquad \textbf{OK}$$

Steel stress at service

Allowable steel stress; AASHTO LRFD 5.9.3:

$$0.8\cdot f_{py} = 194\,ksi$$

$$\Delta f_{ps} := n\cdot\left(\frac{e}{y_b}\right)\cdot\frac{\left(M_{sdl} + M_{DW} + M_{LL}\right)}{S_b} \qquad \Delta f_{ps} = 10.2\,ksi$$

$$f_{psservice} := f_{pi} - \Delta f_{total} + \Delta f_{ps} \qquad \boxed{f_{psservice} = 167\,ksi} \qquad \textbf{OK}$$

10.0 Flexural Strength Check

As calculated above, the factored load is:

$$M_u = 2489\,kip\cdot ft$$

Bonded Steel Stress

$\beta_1 := 0.65$ $k := 0.28$

$$c_{rec} := \frac{\left(A_{ps}\cdot f_{pu}\right)}{0.85\cdot\beta_1\cdot f_c\cdot b + k\cdot A_{ps}\cdot\frac{f_{pu}}{\left(h - y_{bps}\right)}} \qquad c_{rec} = 5.768\,in$$

$$c_{flange} := \frac{A_{ps}\cdot f_{pu} - 0.85\cdot\beta_1\cdot f_c\cdot(b - 6in)\cdot t_s}{0.85\cdot\beta_1\cdot f_c\cdot 6in + k\cdot A_{ps}\cdot\frac{f_{pu}}{\left(h - y_{bps}\right)}} \qquad c_{flange} = 4.630\,in$$

$$c := \begin{cases} c_{rec} & \text{if } c_{rec} \le t_s \\ c_{flange} & \text{otherwise} \end{cases} \qquad a := \beta_1\cdot c$$

$$f_{ps} := f_{pu}\cdot\left[1 - k\cdot\frac{c}{\left(h - y_{bps}\right)}\right] \qquad f_{ps} = 256.3\,ksi$$

Moment capacity at midspan

$\phi := 1.0$

$$\phi M_n := \begin{cases} \phi\cdot A_{ps}\cdot f_{ps}\cdot\left(h - y_{bps} - \frac{a}{2}\right) & \text{if } c_{rec} \le 6in \\ \phi\cdot\left[A_{ps}\cdot f_{ps}\cdot\left(h - y_{bps} - \frac{a}{2}\right) + 0.85\cdot\beta_1\cdot f_c\cdot(b - 6\cdot in)\cdot 6\cdot in\cdot\left(\frac{a}{2} - \frac{6in}{2}\right)\right] & \text{otherwise} \end{cases}$$

3063 kip·ft

OK

11.0 Reinforcement Limits

Maximum RF

$$\frac{c}{\left(h - y_{bps}\right)} = 0.181$$

0.42 maxmimum **(LRFD 5.7.3.3.1-1)** **OK**

Mimumum RF

$$f_{cpe} := P_{se}\cdot\left(\frac{1}{A_g} + \frac{e}{S_b}\right) \qquad f_{cpe} = 3.902\,ksi$$

$$M_{cr} := S_b\cdot\left(f_{cpe} + f_r\right) \qquad M_{cr} = 1828\,kip\cdot ft$$

ϕM_n must be greater than the lesser of 1.2 M_{cr} and 1.33 M_u ***(LRFD 5.7.3.3.2)***

$1.2M_{cr} = 2194\,kip\cdot ft$

$1.33\cdot M_u = 3311\,kip\cdot ft$

$\phi M_n = 3063\,kip\cdot ft$ **OK**

12.0 Camber and Deflection

Self-Weight Effect:

$$\Delta_{dc} := -\frac{5 \cdot w_{dl} \cdot L^4}{384 \cdot E_{ci} \cdot I_g} \qquad \Delta_{dc} = -1.686\,in$$

Prestress Effect:

$$a_c := 0.4 \cdot L$$

$$e_h := e - \left[y_b - \left(\frac{y_{bhend} \cdot N_{harp} + E \cdot N_{st}}{N_{strand}} \right) \right]$$

$$\Delta_{ps} := \frac{P_{sr}}{E_{ci} \cdot I_g} \cdot \left[\frac{e \cdot L^2}{8} - \frac{e_h \cdot (a_c)^2}{6} \right] \qquad \Delta_{ps} = 3.689\,in$$

Superimposed Loads

$$\Delta_{sdl} := \frac{-5 \cdot (w_{sdl} + w_{dw}) \cdot L^4}{384 \cdot E_c \cdot I_g} - \frac{23 P_{dia} \cdot L^3}{648 \cdot E_c \cdot I_g} \qquad \Delta_{sdl} = -0.615\,in$$

Long-term deflections from BDM multiplier method (Table 5-20):

Camber at Transfer

$$C_i := \Delta_{ps} + \Delta_{dc} \qquad C_i = 2.00\,in$$

Camber at 2000 days

$$C_{final} := 2.50 \cdot \Delta_{dc} + 2.25 \cdot \Delta_{ps} \qquad C_{final} = 4.09\,in$$

Deflection from barrier and overlay

$$C_{sidl} := 2.75 \cdot \Delta_{sdl} \qquad C_{sidl} = -1.69\,in$$

Final Camber

$$C_{fsidl} := C_{final} + C_{sidl} \qquad C_{fsidl} = 2.39\,in$$



Prestressed Voided Slab with Cast-in-Place Topping

General Input									AASHTO LRFD Specifications	Specification Reference
Girder type:		18							Prestressed Precast Flat Slab	Prelim.Plan, Sh 1
Span Length:	L =	58.00	ft						C.L. to C.L. Bearing	BDM 5.6.2-A
Girder Length:	L_g =	58.83	ft						End to End	BDM fig. 5-A-XX
Bridge Width:	W =	42.75	ft						Deck Width	Prelim.Plan, Sh 1
Number of Lanes		2								"
Skew Angle:	q_{skew} =	0.00	degrees							"
Girder Section Properties										
Girder Width:	b =	4.00	ft	=	48.00	in				BDM fig. 5-A-XX
Girder Depth:	d =	18.00	in	=	1.50	ft				"
Height	h =	23.00	in							
Top Flange Thickness	t_{tf} =	4.50	in	(from top of void to bottom of slab).						"
Bottom Flange Thickness	t_{bf} =	4.50	in	(from bottom of void to bottom of girder).						"
$h_f = t_d + t_{tf}$ =		9.50								
Width of each Void	b_{eachV} =	9.00	in							"
Net Width of Girder	bw =	21.00	in		A_{actual} =	5.25	in^2			
Number of Voids	N_v =	3			A_{design}=	5.50	in^2			"
Area of Each Void	$A_{each\ v}$ =	63.62	in^2							"
Void Area:	A_v =	190.85	in^2	Void Perimeter each=	28.27	in				"
Area of Girder	A_g =	673.15	in^2							"
Area of Deck + Leg	A_d =	240.00	in^2							
Area of Comp. Sect.	A_{comp} =	913.15	in^2							
Number of girders	N_g =	10		W/b =	10.69					Prelim.Plan, Sh 2
Wt of barrier	w_{TB} =	0.50	k/ft							
Thickness of deck	t_d =	5.00	in							
Wt of Concrete	w_c=	0.155	kcp	for calculating E_c						BDM 5.1.1-D
Wt of Concrete	w_{cd} =	0.160	kcp	for dead load calculations						BDM 3.1.1
Strength of Concrete										
Deck	f_c' =	4.0	ksi							BDM 5.1.1-A.1
Final	f_c' =	8.5	ksi	Transfer	f_{ci}' =	7.0	ksi			BDM 5.1.1-A.2
*Modulus of Elasticity (girder),	$E_c = 33000 w_c^{1.5} \sqrt{f_c'}$ =	5871.1	ksi							
*Modulus of Elasticity (deck),	$E_c = 33000 w_c^{1.5} \sqrt{f_c'}$ =	4027.6	ksi							BDM 5.1.1-D LRFD 5.4.2.4-1
*Modulus of Elasticity (transfer),	$E_{ci} = 33000 w_c^{1.5} \sqrt{f_{ci}'}$ =	3328.0								
nc =	1.46	ratio for transformed section								LRFD 5.7.1
Modulus of Rupture,	$f_r = 0.24\sqrt{f_c'}$ =	0.700	ksi							LRFD 5.4.2.6
Modulus of Rupture to calculate min. reinforcement,	$f_{rMcr\ min} = 0.37\sqrt{f_c'}$ =	1.08	ksi							"
Poisson's ratio =	m =	0.2								LRFD 5.4.2.5

							Reference
Reinforcing Steel - deformed bars							LRFD 5.4.3
Yield strength	f'_y =	60.00	ksi				BDM 5.1.2
Elastic modulus	E_s =	29000.00	ksi				LRFD 5.4.3.2
Prestressing Input							
Strand diam.	d_b =	0.60	in	Area =	0.217	in^2	BDM 5.1.3-A
Ultimate Strength	f_{pu} =	270.00	ksi				LRFD Table 5.4.4.1-1
Yield Strength	f_{py} = .9 f_{pu} =	243.00	ksi				"
Prior to Transfer	f_{pbt} = 0.75 f_{pu} =	202.50	ksi				LRFD Table 5.9.3-1
Effective Stress Limit	f_{pe} = 0.8 f_{py} =	194.40	ksi				"
Modulus of elasticity,	E_p =	28500	ksi.				LRFD 5.4.4.2
Number of Bonded Strands ~2 in from Bottom		14					BDM fig. 5-A-XX
Number of Bonded Strands ~4 in from Bottom		6		Eccentricity (E)			"
Number of Bonded Strands ~6 in from Bottom		0		**E =**	**4.71**	**in**	"
Number of Debonded Strands ~2 in from Bottom		4		**OK**	**OK**		"
Number of Debonded Strands ~4 in from Bottom		0		**OK**			"
Total Number of Bottom Strands		24		≤	50		**OK**
Total Number of Top Strands		4		≤	6		**OK**
Eccentricities of Prestress Strands							
C. G. of bottom strands to bottom of girder =				2.50	in.		BDM fig. 5-A-XX
C. G. of top strands to bottom of girder =				15.00	in.		"
C. G. of bonded bottom strands to C.G. of girder,	e_{bb} =			6.40	in.		"
C. G. of debonded strands to C.G. of girder,	e_{db} =			7.00	in.		"
C. G. of all bottom strands to C.G. of girder,	e_b =			6.50	in.		"
C. G. of top strands to C.G. of girder,	e_t =			6.00	in.		"
E = C. G. of all strands to C.G. of girder =				**4.71**	**in.**		

Output

HS20-44 Force Effect:	**Jacking Force, P_j =**	**1230.4**	**kips**	
Live Load Force Effect:	Moment =	1294.23	ft-kips per lane	See Section 7
	Reaction =	95.69	kips per lane	"

Service Limit State

Concrete Stresses at Transfer		**Top of Girder**		**Bottom of Girder**		**Check**
	Load Case	Calculated	Allowable	Calculated	Allowable	
At d_v	DL+P/S	0.099	0.503	-3.021	-4.200	**OK**
At mid-span	DL+P/S	-1.031	0.503	-2.378	-4.200	**OK**
Concrete Stresses at const.	Load Case	Calculated	Allowable	Calculated	Allowable	
At mid-span	DL+P/S	-1.639	0.503	-1.463	-4.200	**OK**
Concrete Stresses at Service		**Limit State I**		**Limit State III**		
At mid-span	DL+LL+P/S	-2.430	-5.100	-2.584	0.000	**OK**
		-	-	-0.146	0.000	**OK**
	DL+P/S	-1.639	-3.825	-	-	**OK**
	LL+1/2DL+1/2P/S	-1.556	-3.400	-	-	**OK**

Strength Limit State

Moment at Mid-span, ft-kips	Mu =	1386	f Mn =	1856.9	**OK**

Table of Contents

Content

1 Structure:
Single Span Bridge
2 Live load
HL-93
3 Material Properties
Concrete
4 Allowable Concrete Stresses at Service Limit State
Tensile stress limit
Compressive stress limits after all losses
5 Computation of Section Properties
Girder and Composite Section Properties (Table 5-1)
Transformed Section Properties (Table 5-2)
6 Limit State
Service limit state
Load combinations and load factors
7 Vehicular Live Load
Design vehicular live load
Maximum live load force effect
Dynamic load allowance (Impact, IM)
Distribution of Live Load, Dfi (Beam Slab Bridges)
Shear Distribution Factor
Table 7-2: Summary of Live Load Distribution Factors:
Table 7-3: Distributed Live Loads
8 Computation of Stresses
Stresses Due to Weight of Girder (Table 8-1 thru 8-5)
Concrete Stresses Due to Traffic Barrier (Table 8-6 thru 8-8)
Concrete Stresses Due to Concrete Deck and Legs (Table 8-9 thru 8-11)
Concrete Stresses Due to LL+IM (Composite Section) (Table 8-12)
Summary of Stresses at dv (Table 8-13)
Summary of Stresses at Mid-Span (Table 8-14)
9 Approximate Evaluation of Pre-Stress Losses
Time Dependent Losses
Loss due to Strand Relaxation
Loss due to elastic shortening
10 Stresses at Service Limit State
Stresses After Elastic Shortening and Relaxation (Table 10-1)
Stresses After Losses (Noncomposite) (Table 10-2)
Summary of Stresses at Service Limit State (Table 10-3)
Tensile Stress Limit in Areas Without Bonded Reinforcement (at dv)
Compressive Stress Limit at Service - I Load Combination
Tensile Stress Limit at Service - III Load Combination
Stresses at transfer

11 Strength Limit State

Resistance factors

Flexural forces **NG Mu No Check**

Flexural resistance **OK for rectangular section**

Nominal flexural resistance

Minimum reinforcement

Development of prestressing strand **OK developed**

12 Shear Design

Design procedure

Effective Web Width, bv, and Effective Shear Depth, dv

Component of Prestressing Force in Direction of Shear Force, Vp

Shear Stress Ratio

Factored shear force

fpo

Factored moment

Longitudinal Strain (Flexural Tension)

Determination of **b** **and** **q**

Shear strength

Required shear strength

Maximum spacing of shear reinforcement

Minimum shear reinforcement **OK for Min. Transverse Reinf.**

Longitudinal reinforcement **OK for Longitudinal Reinforcement**

13 Deflection and Camber

Deflection due to prestressing forces at Transfer

Deflection due to weight of Girder

Deflection due to weight of Traffic Barrier TB

Deflection due to weight of Deck and Legs

Deflection (Camber) at transfer, Ci

Creep Coefficients (Table 13-1)

Final Deflection Due to All Loads and Creep **OK for deflection**

Time Verses Deflection Curve (fig. 13-1)

References

Prestressed Voided Slab Design
AASHTO LRFD Specifications

Specification Reference

1 Structure: Project XL2526, Name Br #539/858E

Single Span Bridge

Span Length:	58.00	ft	C.L. / C.L. Bearing /	Prelim Plan, Sh 1
Girder Length:	58.83	ft		
Bridge Width:	42.75	ft	Deck between curbs &/or barriers	"
Girder Width:	4.00	ft		BDM fig. 5-A-XX
Number of girders:	10			Prelim Plan, Sh 1

2 Live load

BDM 3.1.2-A
LRFD 3.6.1

HL-93

Vehicular live load designated as " HL-93 " shall consist of a combination of : LRFD 3.6.1.2.1

Design truck or design tandem, plus
Design lane load

Design truck is equivalent to AASHTO HS20-44 truck. LRFD 3.6.1.2.2

The design lane shall consist of a 0.64 klf, uniformly distributed in the longitudinal direction. Design lane load shall be assumed to be uniformly distributed over 10 ft width in the transverse direction. LRFD 3.6.1.2.4

Design tandem shall consist of a pair of 25.0 kip axles spaced at 4'-0" apart LRFD 3.6.1.2.3

Number of design lanes: LRFD 3.6.1.1.1

Integer part of : Width / (12 ft lane) = 3 Lanes
and 2 lanes if width is 20-24ft.

3 Material Properties

Concrete

LRFD Specifications allows a concrete compressive strength with a range of 2.4 to 10.0 ksi at 28 days. Compressive strength for prestressed concrete and decks shall not be less than 4.0 ksi. LRFD 5.4.2.1

4 Allowable Concrete Stresses at Service Limit State

LRFD 5.9.4

Tensile stress limit

LRFD 5.9.4.2.2

For service loads which involve traffic loading, tensile stress in members with bonded or unbonded prestressing strands shall be investigated using Service - III load combination.

Tension in other than precompressed tensile zone assuming uncracked section:

$f_t = 0.19\sqrt{f'_{ci}}$ Transfer & Lifting BDM 5.2.3-B

$f_t = 0.19\sqrt{f'_c}$ Shipping "

Tension in precompressed tensile zone:

f_t = 0.00 ksi "

Compressive stress limits after all losses

Compression shall be investigated using Service - I load combination: LRFD 5.9.4.2

$f_c = 0.45\ f'_c$	Due to permanent loads	BDM 5.2.3-B
$f_c = 0.60\ f'_c$	To all load combinations	"
$f_c = 0.40\ f'_c$	Due to transient loads and one-half of permanent loads	"

5 Computation of Section Properties

Girder and Composite Section Properties

Table 5-1: Moment of Inertia, I

	Area (in^2)	Y_b (in)	Ix` (in^4)	d (in)	Ad^2 (in^4)	Ix (in^4)
Girder	673.15	9.00	22021.6	3.0	6149.6	28171.2
Legs	0.00	0.00	0.0	0.0	0.0	0.0
Deck	240.00	20.50	500.0	-8.5	17248.3	17748.3
Composite	913.1	12.02	-	-	-	45919.5

Ybg = 9.00 in Ytg = 9.0 in

Ybc = 12.02 in Ytgc = 6.0 in

Ytsc = 11.0 in

Torsional Moment of Inertia

J = 55820 in^4 LRFD C4.6.2.2.1-3

Section Modulus: Girder

(Bottom) $S_b = \frac{I_g}{y_{bg}} =$ 2446.8 in^3

(Top) $S_t = \frac{I_g}{y_{tg}} =$ 2446.8 in^3

Composite

(Bottom) $S_b = \frac{I_{comp}}{y_{bc}} =$ 3819.5 in^3

(Top girder) $S_t = \frac{I_{comp}}{y_{tgc}} =$ 7682.1 in^3

(Top slab) $S_t = \frac{I_{comp}}{y_{tsc}} =$ 4183.06 in^3

Transformed section properties

Deck

b_e = b/nc = 32.93 in

Legs

A_{lege} = 0.00 in^2

Y_{blege} = 0.00 in

I_{xlege} = 0.0 in^4

Table 5-2: Moment of Inertia Transformed section, I

	Area (in^2)	Y_b (in)	Ix` (in^4)	d (in)	Ad^2 (in^4)	Ix (in^4)
Girder	673.15	9.00	22021.6	2.3	3438.0	25459.6
Legs	0.00	0.00	0.0	0.0	0.0	0.0
Deck	164.64	20.50	500.0	-9.2	14056.6	14556.6
Composite	837.8	11.26	-	-	-	40016.2

Ybgt = 9.00 in Ytgt = 9.0 in

Ybct = 11.26 in Ytgct = 6.7 in

Ytsct = 11.7 in

Composite (Bottom) $S_{bt} = \frac{I_{compt}}{y_{bct}} =$ 3553.9 in^3

(Top girder) $S_{ttg} = \frac{I_{compt}}{y_{tgct}} =$ 5937.1 in^3

(Top slab) $S_{tts} = \frac{I_{compt}}{y_{tsct}} =$ 3408.52 in^3

6 Limit State

Each component and connection shall satisfy the following equation for each limit state :

LRFD Eqn. 1.3.2.1-1

$$\sum \eta_i \gamma_i Q_i \le \phi R_n = R_r$$

Where:

Load Modifier for Ductility, Redu for loads which a max. value of g_i is appropriate

h_i = $\eta_i \eta_R \eta_I \ge 0.95$ LRFD 1.3.2.1-2

h_i = $\frac{1}{\eta_D \eta_R \eta_I} \le 1.00$ for loads which a min. value of g_i is appropriate LRFD 1.3.2.1-3

h_D = Ductility factor LRFD 1.3.3

h_R = Redundancy factor LRFD 1.3.4

h_I = Operational Importance factor LRFD 1.3.5

h_i = 1.00 for any ordinary structure

Therefore the Limit State Equation simplifies to:

$$\sum \gamma_i Q_i \le \phi R_n = R_r$$

Where:

g_i = Load Factor, statistically based multiplier applied to force effects LRFD 1.3.2.1

Q_i = Force Effect (Moment or Shear) "

f = Resistance Factor "

R_n = Nominal Resistance "

R_r = Factored Resistance "

Service limit state

Service limit state shall be taken as restriction on stress, deformation and crack width under regular service conditions. LRFD 1.3.2.2

Load combinations and load factors

The Total Factored Force Effect shall be taken as:

$$Q = \sum \gamma_i Q_i$$ LFRD 3.4.1-1

Where:

g_i = Load Factors specified in Tables 1 & 2

Q_i = Force Effects from loads specified in LRFD

Strength-I load combination relating to the normal vehicle use of the bridge without wind. LRFD 3.4.1

Service-I load combination relating to the normal operational use of the bridge. "

Service-III load combination relating only to tension in prestressed concrete structures with the objective of crack control. "

$$Q_{Strength-I} = \gamma_{DC} DC + \gamma_{DW} DW + 1.75(LL + IM)$$ LRFD Tables 3.4.1-1 & 2

$Q_{Service-I}$ = 1.0 (DC + DW) + 1.0 (LL + IM) "

$Q_{Service-III}$ = 1.0 (DC + DW) + 0.8 (LL + IM) "

Effects due to shrinkage and creep are not considered. BDM 5.6.2

7 Vehicular Live Load

LRFD 3.6.1.2

Design vehicular live load

LRFD 3.6.1.2.1

Design live load designated as HL-93 shall be taken as:

LL = [Truck or tandem] (1 + IM) + Lane

Single Span Length =		58.00	ft		
HS-20 Truck Axles	32.00	32.00	8.00	kips	LRFD 3.6.1.2.2
HS-20 Truck Axle Spacing		14.00	14.00	ft	"
Tandem Truck Axles	25.00	25.00	kips		LRFD 3.6.1.2.3
Tandem Truck Axle Spacing		4.00	ft		"
Lane load density, w_L	0.64	k/ft			LRFD 3.6.1.2.4

Maximum live load force effect

LRFD5.8.2.9

Max Shear, V_{max}, occurs at the horizontal distance of d_v from the face of support where d_v is the effective depth between the tensile and compressive resultant forces in the member and is **≥ Max [.72 h or .9de].** LRFD5.8.3.2, & BDM 5.2.4-6

Max Moment, Mmax, occurs near midspan (CL) underneath the nearest concentrated load (P1) when that load is the same distance to midspan as the center of gravity (+ CG) is to midspan. Use the Truck or Tandem (Near Midspan) and the Lane (At Midspan) maximum moments together to be conservative.

So the	**HL-93 Live Load, LL = HS-20 Truck(1+IM)+Lane Load Governs**					
Near Center line						
Mmax =	**770.759**	**ft-kips**	**Corresponding V@Mmax =**	**25.10**	**kips**	
At dv						
Vmax =	**58.67**	**kips**	**Corresponding M@Vmax =**	**82.35**	**ft-kips**	LRFD 5.8.3.2
Lane Loading						
M@dv =	**25.4199**	**ft-kips**	**Corresponding V@dv =**	**17.66**	**kips**	
M@CL	**269.12**	**ft-kips**	**Corresponding V@CL =**	**0.00**	**Kips**	

Dynamic load allowance (Impact, IM)

LRFD 3.6.2.1

The static effect of Design Truck LL shall be increased by the following percentage : IM = 33% For bridge components (girder) LRFD Table 3.6.2.1-1

	At dv	3'	6'	9'	At CL	
M(LL+IM)=	134.9	279.0	522.5	730.5	1294.2	k-ft
V(LL+IM)=	95.7	92.0	85.2	78.3	32.5	**kips**

Distribution of Live Load, Df_i (Beam Slab Bridges)

LRFD 4.6.2.2

For Multibeam deck bridges with conditions as follows, the approximate method of live load distribution applies with the following conditions :

Width of deck is constant	LRFD 4.6.2.2.1
Number of Beams,	"
Beams are parallel $N_b \geq 4$	"
Beams have approximately the same stiffness	"
Roadway overhang, $d_e \leq 3.0\,ft$	"
Curvature in plane is less than 12 degree	"
X-section is one consistent with one listed in LRFD Table 4.6.2.2.1-1	"

The multiple presence factor shall not be applied in conjunction with approximate load distribution except for exterior beams. LRFD 3.6.1.1.2

The typical x-section **g** applies to voided and solid slabs w P.T. the composite deck makes the section significantly connected to act as a unit. LRFD Table 4.6.2.2.1-1

Distribution Factor for Moment Interior Girder, DF_{MInt}

LRFD 4.6.2.2.2b

For Multibeam deck bridges within the range of applicability and conditions as follows, the approximate method of live load distribution applies :

Range of applicability:	Width of beam (b),	35 ≤	48	≤ 60 in	LRFD Table 4.6.2.2.2b-1
	Span length (L),	20 ≤	58.00	≤ 120 ft	"
	Number of Beams (N_b),	5 ≤	10.00	≤ 20	"
	$k = 2.5\,N_b^{-0.2} \geq 1.5$ =		1.58		"
	$Df_i = k(b/305)^{0.6}(b/12L)^{0.2}(I/J)^{0.06}$ =		0.301		"

Skew Reduction Factor for Moments

Range of applicability: Skew (q_{skew}), $0 \leq$ 0.00 $\leq 60^o$ LRFD 4.6.2.2.2e-1

if θ_{skew} is $\geq 60^o$ then use $\theta_{skew} = 60^o$ "

Reduction Factor = 1.05 - 0.25 tan(q) $\leq$ 1.0 "

Reduction Factor = 1.000 "

Moment Distribution Factor for Skewed Interior girder,

DF_{MInt} = 0.301

Moment Distribution Factor for Exterior girder, DF_{MExt} LRFD 4.6.2.2.2d

For Multibeam deck bridges within the range of applicability and conditions as follows, the approximate method of live load distribution applies : LRFD 4.6.2.2.1

$DF_{MExt} = e \times DF_{MInt}$

Where Skew Reduction Factor is included in DF_{MInt} and Correction Factor LRFD Table 4.6.2.2.2d-1

$$e = 1.04 + \frac{d_e}{25} \geq 1.0$$ "

barrier footprint = 18.50 in LRFD 4.6.2.2.2d

de = 2.00 ft

e = 1.12

Moment Distribution Factor for Skewed Exterior Girder,

DF_{MExt} = 0.337

Shear Distribution Factors

Shear Distribution Factor for Interior Girder, DF_{VInt} LRFD 4.6.2.2.3a

For Multibeam deck bridges within the range of applicability and conditions as follows, the approximate method of live load distribution applies :

Range of applicability:	Width of beam (b), 35 $\leq$	48	$\leq$ 60 in	LRFD Table 4.6.2.2.3a-1
	Span length (L), 20 $\leq$	58.00	$\leq$ 120 ft	"
	Number of Beams (N_b), 5 $\leq$	10	$\leq$ 20	"
	St Venant Torsional Inertia (J), 25000 $\leq$	55820	$\leq$ 610000 in^4	"
	Net Moment of Inertia (I_c), 40000 $\leq$	45919	$\leq$ 610000 in^4	"

By substituting the above pre-determined values, the approximate live load distribution factor for shear may be taken as the greater of:

One design Lane Loaded:

$$DF_{VInt} = \left(\frac{b}{130L}\right)^{0.15}\left(\frac{I_c}{J}\right)^{0.05} = 0.447$$ LRFD Table 4.6.2.2.3a-1

Two or more Lanes Loaded:

$$DF_{VInt} = \left(\frac{b}{156}\right)^{0.4}\left(\frac{b}{12.0L}\right)^{0.1}\left(\frac{I_c}{J}\right)^{0.05}\left(\frac{b}{48}\right) = 0.456$$ "

Skew Reduction Factor for Shear

Range of applicability:	Skew (q_{skew}),	$0 \leq$	0.00	$\leq 60^o$	LRFD Table 4.6.2.2.3c-1
	Span length (L),	$20 \leq$	58.00	≤ 120 ft	"
	Depth of beam or stringer (d),	$17 \leq$	18	≤ 60 in	"
	Width of beam (b),	$35 \leq$	48	≤ 60 in	"
	Number of Beams (N_b),	$5 \leq$	10	≤ 20	"

$$RF_\theta = 1.0 + \frac{12.0L}{90d}\sqrt{\tan\theta} = \quad 1.000$$ "

Shear Distribution Factor for Skewed Interior Girder,

DF_{VInt} = 0.456

Shear Distribution Factor for Skewed Exterior Girder LRFD 4.6.2.2.3b

For Multibeam deck bridges within the range of applicability and conditions as follows, the approximate method of live load distribution applies : LRFD 4.6.2.2.1

Range of applicability:	Overhang, d_e =		2.00	≤ 2.0 ft	LRFD Table 4.6.2.2.3b-1
	Width of Beam (b),	$35 \leq$	48.00	≤ 60	"

One design lane loaded:

$$e = 1.25 + \frac{d_e}{20} \geq 1.0 = \quad 1.06$$ "

$DF_{VExt} = e \times DF_{VInt}$ "

Two or more lanes loaded:

48/b =	1	≤ 1.0	"

$$e = 1 + \left(\frac{d_e + b/12 - 2}{40}\right)^{0.5} \geq 1.0 = 1.32$$ "

DFVExt = e x DFVInt (48/b) "

Shear Distribution Factor for Skewed Exterior Girder,

DF_{VExt} = 0.600

Table 7-2: Summary of Live Load Distribution Factors:

		Moment		Shear
Girder	Interior Girder	DF_{MInt} = 0.301	DF_{VInt} =	0.456
	Exterior Girder	DF_{MExt} = 0.337	DF_{VExt} =	0.600

Table 7-3: Distributed Live Load

Simple span	Moment, ft-kips				
	dv	3'	6'	9'	0.5 L
Interior Girder	40.63	84.01	157.34	219.98	389.72
Exterior Girder	45.51	94.09	176.22	246.38	436.49

Simple span	Shear, kips				
	dv	3'	6'	9'	0.5 L
Interior Girder	43.63	41.96	38.83	35.70	14.80
Exterior Girder	57.43	55.23	51.11	46.98	19.49

8 Computation of Stresses

Sign convention: + Tensile stress
- Compressive stress

Stresses due to Weight of Girder

LRFD 3.3.2

Unit weight girder, w_g = 0.72 k/ft

Transfer Length = d_b (60) = 36.00 in LRFD 5.11.4.1

$$V_G = w_G\left(\frac{L}{2} - x\right) =$$

AISC LRFD p 5-162

Table 8-1

	x (ft)	V_G (kips)
dv =	1.38	20.01
	3.00	18.84
	6.00	16.67
	9.00	14.49
mid-span =	29.00	0.00

$$M_G = \frac{w_G x}{2}(L - x) =$$

"

Table 8-2

	x (ft)	M_G (ft-kips)
dv =	1.38	28.31
	3.00	59.78
	6.00	113.03
	9.00	159.77
mid-span =	29	304.68

At Transfer Using Full Length of the Girder

$$V_G = w_G\left(\frac{L}{2} - x\right) =$$

"

Table 8-3

	x (ft)	V_G (kips)
dv =	1.80	20.01
	3.00	19.14
	6.00	16.97
	9.00	14.79
mid-span =	29.42	0.00

$$M_G = \frac{w_G x}{2}(L - x) =$$

AISC LRFD p 5-162

Table 8-4

	x (ft)	M_G (ft-kips)
dv =	1.80	37.13
	3.00	60.68
	6.00	114.84
	9.00	162.48
mid-span =	29.4167	313.50

Table 8-5: Stresses due to Girder Dead Load, s_G

	dv	3 ft	6 ft	9 ft	0.5 L
Top of girder ksi	-0.139	-0.293	-0.554	-0.784	-1.494
Bottom of girder ksi	0.139	0.293	0.554	0.784	1.494
Top of girder at transfer ksi	-0.182	-0.298	-0.563	-0.797	-1.537
Bottom of girder at transfer ksi	0.182	0.298	0.563	0.797	1.537

Concrete stresses due to Traffic Barrier (DC)

Weight of Traffic Barrier over three girders, $w_{TB3G} = \frac{w_{TB}}{3} =$ 0.17 k/ft BDM 5.6.2-B.2.d

$$V_{TB} = w_{TB}\left(\frac{L}{2} - x\right) =$$

Table 8-6

	x (ft)	V_{TB} (kips)
dv =	1.38	4.60
	3.00	4.33
	6.00	3.83
	9.00	3.33
mid-span =	29.00	0.00

$$M_{TB} = \frac{w_{TB}x}{2}(L - x) =$$

Table 8-7

	x (ft)	M_{TB} (ft-kips)
dv =	1.38	6.51
	3.00	13.75
	6.00	26.00
	9.00	36.75
mid-span =	29.00	70.08

Table 8-8: Stresses due to Traffic Barrier, s_{TB} Comp.

		dv	3 ft	6 ft	9 ft	0.5 L
Top of slab	ksi	-0.019	-0.039	-0.075	-0.105	-0.201
Top of girder	ksi	-0.010	-0.021	-0.041	-0.057	-0.109
Bottom of girder	ksi	0.020	0.043	0.082	0.115	0.220

Concrete stresses due to Concrete Deck and Legs (D+L)

Area of deck + Legs = 240.00 in^2

Extra Concrete from A dimension = 24.00 in^2

Total Deck = 264.00 in^2

Weight of Concrete Deck, w_{SIDL} = 0.29 k/ft

$$V_{D+L} = w_{D+L}\left(\frac{L}{2} - x\right) =$$

Table 8-9

	x (ft)	V_{D+L} (kips)
dv =	1.38	8.10
	3.00	7.63
	6.00	6.75
	9.00	5.87
mid-span =	29.00	0.00

$$M_{D+L} = \frac{w_{D+L}x}{2}(L-x) =$$

Table 8-10

	x (ft)	M_{SIDL} (ft-kips)
dv =	1.38	11.46
	3.00	24.20
	6.00	45.76
	9.00	64.68
mid-span =	29.00	123.35

Table 8-11: Stresses due to Deck and Legs, s_{DW}

		dv	3 ft	6 ft	9 ft	0.5 L
Top of girder	ksi	-0.056	-0.119	-0.224	-0.317	-0.605
Bottom of girder	ksi	0.056	0.119	0.224	0.317	0.605

Stresses in Girder due to LL+IM (composite section):

Table 8-12:

		dv	3 ft	6 ft	9 ft	0.5 L
Top of Slab	ksi	-0.131	-0.270	-0.506	-0.707	-1.252
Top of Girder	ksi	-0.071	-0.147	-0.275	-0.385	-0.682
Bottom of Girder	ksi	0.143	0.296	0.554	0.774	1.371

Summary of stresses at dv

Table 8-13:

Stresses, ksi	Top of girder	Bottom of girder	Top of slab @	Top of girder @	Bottom of girder @
Weight of Girder	-0.139	0.139			
Weight Traffic Barrier	--	--	-0.019	-0.010	0.020
Weight of Deck	-0.056	0.056			
Live Load plus Impact Service - I	--	--	-0.131	-0.071	0.143
Live Load plus Impact Service - III	--	--	-0.104	-0.057	0.114

Summary of stresses at Mid-Span

Table 8-14:

Stresses, ksi	Top of girder	Bottom of girder	Top of slab @	Top of girder @	Bottom of girder @
Weight of Girder	-1.494	1.494			
Weight Traffic Barrier	--	--	-0.201	-0.109	0.220
Weight of Deck	-0.605	0.605			
Live load plus impact Service - I	--	--	-1.252	-0.682	1.371
Live load plus impact Service - III	--	--	-1.002	-0.545	1.097

9 Approximate Evaluation of Pre-Stress Losses

LRFD 5.9.5

For Prestress losses in members constructed and prestressed in a single stage, relative to the stress immediately before transfer, in pretensioned members, with low relaxation strands, the **Total Lump Sum Losses** may be taken as:

$$\Delta f_{pT} = \Delta f_{pES} + \Delta f_{pLT}$$

LRFD 5.9.5.1

Time Dependent Losses

LRFD 5.9.5.3

For normal weight concrete pretensioned by low-relaxation strands, approximate lump-sum time dependent losses resulting from creep and shrinkage of concrete and relaxation of prestressing steel may be used as follows:

$$\Delta f_{pLT} = 10\frac{F_{pi}A_{ps}}{A_g}\gamma_h\gamma_{st} + 12\gamma_h\gamma_{st} + \Delta f_{pR} = \quad 19.53 \quad \text{ksi}$$ LRFD 5.9.5.3-1

$Y_h = 1.7\text{-}.01H = 0.9$ LRFD 5.9.5.3-2

$Y_{st} = 5/(1+fci) = 0.625$ LRFD 5.9.5.3-3

Losses due to elastic shortening should be added to time-dependent losses to determine the total losses.

Loss due to strand relaxation

$\Delta f_{pR} =$ 2.50 LRFD 5.9.5.3

Loss due to elastic shortening

$f_{cgp} =$ Stress due to prestressing and girder weight at Centroid of prestressing strands, at section of maximum moment LRFD 5.9.5.2.3a

Concrete stress at Centroid of prestressing

$P_i = N\ A_{ps}\ .7f_{pu} =$ 1148.4 kips BDM 5.1.4-A

$$f_{ps} = -\frac{P_i}{A_g} - \frac{P_i e^2}{I_g} = -2.86 \quad \text{ksi}$$

$$f_g = \frac{M_g e}{I_g} = 0.78 \quad \text{ksi}$$

$f_{cgp} = f_g + f_{ps} =$ -2.08 ksi BDM 5.1.4-3

Elastic shortening loss,

$$\Delta f_{pES} = \left(\frac{E_p}{E_{ci}}\right) f_{cgp} = \quad \mathbf{11.14} \quad \mathbf{ksi}$$ LRFD 5.9.5.2.3a-1

$\Delta f_{pT} = \Delta f_{pES} + \Delta f_{pLT} =$ **30.67** **ksi** LRFD 5.9.5.1-1

Above relaxation losses not added to Time Dependent Losses, but will be used for Service Limit State Total Transfer PS Losses, Section 10.

10 Stresses at Service Limit State

Stresses after elastic shortening and relaxation :

Force per strand P / N = $A_{ps}(f_{pbt}-Df_{pES}-\Delta_{fpR})$ = 40.98 kips

Table 10-1:

	No. of strands	Force per Strand, kips	Total force	Eccent. in.	Moment in-kip
Bottom Strands	20	40.98	819.66	6.40	5246
Debonded Strands @ 3'	0	40.98	0.00	7.00	0
Debonded Strands @ 6'	2	40.98	81.97	7.00	574
Debonded Strands @ 9'	2	40.98	81.97	7.00	574
Top Strands	4	40.98	163.93	-6.00	-984
	dv	P (kips)=	984	Mp(in-k) =	4262
	3	P (kips)=	984	Mp(in-k) =	4262
	6	P (kips)=	984	Mp(in-k) =	4262
	9	P (kips)=	1066	Mp(in-k) =	4836
	mid	P (kips)=	1148	Mp(in-k) =	5410

Prestressing stress (using the full length of the girder)

	dv				mid-span
	1.40	3.00	6.00	9.00	29.00
$f_{p(top)} = -\frac{P}{A_c} + \frac{M_{ps}}{S_t}$ = ksi	0.28	0.28	0.28	0.39	0.51
$f_{p(bottom)} = -\frac{P}{A_c} - \frac{M_{ps}}{S_b}$ = si	-3.20	-3.20	-3.20	-3.56	-3.916

Stresses after Losses (noncomposite section)

Force per strand P / N = $A_{ps}(f_{pbt}-Df_{pT})$ = 37.29 kips BDM 5.1.4-A.1

Table 10-2:

	No. of strands	Force per Strand, kips	Total force	Eccent. in.	Moment in-kip
Bottom Strands	20	37.29	745.74	6.40	4773
Debonded Strands @ 3'	0	37.29	0.00	7.00	0
Debonded Strands @ 6'	2	37.29	74.57	7.00	522
Debonded Strands @ 9'	2	37.29	74.57	7.00	522
Top Strands	4	37.29	149.15	-6.00	-895
	dv	P (kips)=	895	Mp(in-k) =	3878
	3	P (kips)=	894.89	Mp(in-k) =	3878
	6	P (kips)=	895	Mp(in-k) =	3878
	9	P (kips)=	969	Mp(in-k) =	4400
	mid	P (kips)=	1044	Mp(in-k) =	4922

Prestressing stress after all losses (noncomposite)

	dv	3.00	6.00	9	mid-span
$f_{p(top)} = -\frac{P}{A} + \frac{M_{ps}}{S_t}$ = ksi	0.26	0.26	0.26	0.36	0.46
$f_{p(bottom)} = -\frac{P}{A_c} - \frac{M_{ps}}{S_b}$ = ksi	-2.91	-2.91	-2.91	-3.24	-3.563

Summary of Stresses at Service Limit States

Table 10-3:

	dv	3'	6'	9'	mid-span	
Prestressing stress + self wt of girder (using full length of girder)						girder + ps
$f_{g(topDL+PS)}$ (ksi) =	0.10	-0.02	-0.28	-0.40	-1.03	
$f_{g(botDL+PS)}$ (ksi) =	-3.02	-2.91	-2.64	-2.76	-2.38	
Construction stress at top & bottom of girder (noncomposite)						gir + ps + deck
$f_{g(topDL+PS)}$ =	0.06	-0.16	-0.52	-0.74	-1.64	
$f_{g(botDL+PS)}$ =	-2.72	-2.50	-2.14	-2.14	-1.46	
Stresses due to all loads plus prestressing :						gir+ps+deck+barr+(LL+im)
$f_{g(topDL+LL+PS)}$ =	-0.02	-0.32	-0.84	-1.19	-2.43	
$f_{g(botDL+LL+PS)}$ =	-2.56	-2.16	-1.50	-1.25	0.13	
Stresses due to Transient loads and one-half of permanent loads plus prestressing: .5(gir+ps+deck+barr)+(LL+im)						
$f_{g[topLL+(1/2DL+PS)]}$ =	-0.05	-0.24	-0.56	-0.78	-1.56	
$f_{g[botLL+(1/2(DL+PS))]}$ =	-1.21	-0.93	-0.47	-0.24	0.75	
Stresses due at service III load combination:						gir+ps+deck+barr+.8(LL+im)
$f_{g[bot.8*LL+(DL+PS)]}$ =	-2.58	-2.22	-1.61	-1.40	-0.15	

Tensile stress limit in areas without bonded reinforcement (at dv) :

$f_t = 0.0948\sqrt{(f'_{ci})} \leq$ 0.200 ksi > 0.099 ksi BDM 5.2.3-B

Compressive stress limit in pretensioned components :

$f_{ci} = 0.60f'_{ci}$ = -4.20 ksi > -3.02 ksi "

Compressive stress limit at service - I load combinations

BDM 5.2.3-B;

Due to permanent loads (DL + PS) :

$f_{comp.}$ =0.45 f'_c = -3.83 ksi "

Due to permanent loads and transient loads (DL + PS + LL):

$f_{comp.}$ = 0.60 f'_c = -5.10 ksi "

Due to transient loads and one-half of permanent loads (LL + 1/2DL + 1/2PS):

$f_{comp.}$ = 0.40 f'_c = -3.40 ksi "

Tensile stress limit at service - III load combination

f_{tens} = 0.00 ksi > -0.146 ksi "

Stresses at transfer

The prestressing force may be assumed to vary linearly from zero at free end to a maximum at transfer length, l_t.

$l_t = 60 \times d_{strand}/12$ = 3.00 ft = 36.00 in. LRFD 5.5.4.1

11 Strength Limit State

Strength limit state shall be considered to satisfy the requirements for strength and stability.

$$\eta \Sigma (\gamma_i Q_i) < \phi R_n = R_r$$ LRFD Eqn. 1.3.2.1-1

Resistance factors

ϕ =	0.90	Flexural in reinforced concrete	LRFD 5.5.4.2.1
ϕ =	1.00	Flexural in prestressed concrete	"
ϕ =	0.90	Shear	"
ϕ =	0.75	Axial Compression	"

Flexural forces

Strength - I load combination is to be considered for normal vehicular load without wind. LRFD 3.4.1

Load factors :

γ_{DC} =	1.25	Components and attachments (Girder + TB + Deck)	LRFD TABLE 3.4.1-1
γ_{DW} =	1.50	Wearing surface (SIDL or ACP)	"
γ_{LL} =	1.75	Vehicular load (LL + Impact)	"

Flexural moment = 1.0 [1.25 DC + 1.5 DW + 1.75 (LL+IM)]

M_u = 1386.5 ft.-kips

Checked using QConBridge program, QConBridge 101-145MuChk.qcb Report p 4of 5

M_u =	**200.0**	**ft.-kips**	**NG Mu No Check**

Flexural resistance

LRFD 5.7.3

For practical design an equivalent rectangular compressive stress distribution of 0.85 f'_c overall depth of $a = b_1 c$ may be considered. LRFD 5.7.2.2

β_1 = 0.65 for f'_c = 8.5 ksi "

The average stress in prestressing strands, f_{ps}, may be taken as: LRFD 5.7.3

$$f_{ps} = f_{pu}\left(1 - k\frac{c}{d_p}\right)$$ LRFD 5.7.3.1.1-1

$$k = 2\left(1.04 - \frac{f_{py}}{f_{pu}}\right) = 0.28$$ LRFD 5.7.3.1.1-2

Location of neutral axis of composite transformed section :

For rectangular section without mild reinforcement :

$$c = \frac{A_{ps} f_{pu} + A_s f_y + A'_s f'_y}{0.85 f'_c \beta_1 b + k A_{ps} \frac{f_{pu}}{d_p}}$$ LRFD 5.7.3.1.1-4

$A_s = A'_s$ =	0.00	$in.^2$	with no partial prestressing considered
A_{ps} =	6.08	$in.^2$	Area prestressing strands
d_p =	18.71	in.	Distance from extreme compression fiber to Centroid of prestressing strands.
c1 =	9.156	in	

Deck Thickness + Top Flange = 9.50 in **OK for rectangular section**

For T-section without mild reinforcement :

$$c=\frac{A_{ps}f_{pu}+A_s f_y+A_s' f_y'-0.85f_c`(b-b_w)h_f}{0.85f_c'\beta_1 b_w+kA_{ps}\frac{f_{pu}}{d_p}}$$ LRFD 5.7.3.1.1-3

bwe = 21.00 in
h_f = 9.50 in
c2 = 6.67 in

c = 9.156 in
a = β_1 c = 5.95 in < t_f = 9.50 in. LRFD 5.7.3.2.2

Average stress in prestressing steel :

$$f_{ps}=f_{pu}\left(1-k\frac{c}{d_p}\right)=$$ 233.0 ksi. LRFD 5.7.3.1.1-1

Tensile stress limit at strength limit state, f_{pu} = 270.0 ksi LRFD Table 5.4.4.1-2

Nominal flexural resistance

LRFD 5.7.3.2

Rectangular: $M_n=A_{ps}f_{ps}\left(d_p-\frac{a}{2}\right)=$ 1857 ft.-kips LRFD 5.7.3.2.2-1

T-shaped: $M_n=A_{ps}f_{ps}\left(d_p-\frac{a}{2}\right)+0.85f`_c(b-b_w)h_f(a/2-h_f/2)=$ "

1583 ft.-kips
M_n = 1857 ft.-kips

Flexural resistance, $M_r = \Phi M_n$ = 1857 > M_u = 1386 ft.-kips LRFD 5.7.3.2.1-1

Minimum reinforcement

LRFD 5.7.3.3.2

The amount of prestressing and non-prestressing steel shall be adequate to develop flexural resistance greater than or equal to the least 1.2 times the cracking moment or 1.33 times the factored moment required by Strength Limit State 1. "

Flexural resistance,

Mr = Φ Mn ≥ The Lesser of : $1.2M_{cr}$ = 613.4 ft-kips **governs**
$1.33M_u$ = 1844.0 ft-kips

$$M_{cr}^{*}=S_c\left(f_r+f_{pe}\right)-M_{d/nc}\left(\frac{S_c}{S_b}-1\right)$$: $S_c f_r$ = 222.71 ft-kips LRFD 5.7.3.3.2-1

f_{pe} = -3.56 Stress at extreme fiber due to prestressing LRFD 5.4.2.6
M_{cr} = 511 ft.-kips
M_r = 1857 >1.2 Mcr = 613.4 ft.-kips LRFD 5.7.3.3.2

Development of prestressing strand

Pretension strand shall be bonded beyond the critical section for a development length taken as : 5.11.4.2

$$l_d \geq K\left(f_{ps} - \frac{2}{3} f_{pe}\right) d_b \qquad K = 1.0 \qquad \text{LRFD 5.11.4.2-1}$$

f_{ps} = 233.01 ksi
f_{pe} = 171.83 ksi
d_b = 0.60 in.

$l_d \geq$ 5.92 ft

l_d = 5.92 ft < 1/2 Span L/2 = 29.00 **OK developed**

12 Shear Design

Design procedure

The shear design of prestressed members shall be based on the general procedure of AASHTO - LRFD Bridge Design Specifications article 5.8.3.4.2 using the Modified Compression Field Theory. WSDOT Design Memo LRFD Shear Design, 3/19/02

Shear design for prestressed girder will follow the (replacement) flow chart for LRFD Figure C.5.8.3.4.2-5. This procedure eliminates the need for q angle and b factor iterations. WSDOT Design Memo, Shear Design 6/18/01

Effective Web Width, b_v, and Effective Shear Depth, d_v LRFD 5.8.2.9

Effective web width shall be taken as the minimum web width, measured parallel to the neutral axis, between the resultants of the compressive and tensile forces due to flexure "

b_v = Net Web = Width - Voids "
b_v = 21.0 in.

Effective shear depth shall be taken as the distance between resultant of tensile and compressive forces due to flexure but it need not to be taken less than the greater of : 0.9de OR 0.72h. "

$d_v = d_e - a/2$ = 15.7 in. "
$d_v = 0.9de$ = 16.8 in. **governs** "
$d_v = 0.72h$ = 16.6 in. "

use d_v = 16.8 or 1.40 ft

Component of Prestressing Force in Direction of Shear Force, V_p LRFD 5.8.3.3

The prestressing in PCPS Slabs are horizontal only, there is no vertical component

V_p = 0.00 kips

Shear Stress Ratio

Where the Shear Stress (ksi) on the concrete is,

$$v_u = \frac{V_u - \phi V_p}{\phi b_v d_v} =$$ 0.444 ksi LRFD 5.8.2.9-1

$$\frac{v_u}{f_c'} =$$ **0.0522** LRFD Figure C.5.8.3.4.2-5

Where the

Factored shear force

$V_u = S (h_i \, g_i \, V_i)$ LRFD 3.4.1-1

h_i =	1.00	Limit state factor for any ordinary structure	LRFD TABLES 3.4.1-1 & 3.4.1-2
g_{DC} =	1.25	Components and attachments (Girder + TB + Deck)	"
g_{DW} =	1.50	Wearing surface (SIDL or ACP)	"
g_{LL+IM} =	1.75	Vehicular load (LL + Impact)	"

Girder, V_g =	20.0	kips
Traffic Barrier, V_{tb} =	4.6	kips
Deck + Legs, V_{D+L} =	8.1	kips
V_{DC} =	32.7	kips
V_{LL+IM} x DF_{VExt} =	57.4	kips

Shear force effect,

$V_u = 1.00(1.25\ V_{DC} + 1.5\ V_{DW} + 1.75\ V_{LL+IM})$

V_u = **141.36** **kips**

f_{po}

If the (critical) section (for shear) is within the transfer length of any (prestress) strands, calculate the effective value of f_{po}, the parameter taken as modulus of elasticity of prestressing tendons multiplied by the locked in difference in strain between the prestressing tendons and the surrounding concrete. LRFD Figure C.5.8.3.4.2-5

$f_{po} = 0.70 f_{pu}$ LRFD 5.8.3.4.2

$$f_{po} = \left[\frac{x + d_v}{l_t}\right] 0.70 f_{pu}$$ **governs, dv is within the transfer length of the prestressed strands** "

Where the distance between the edge of girder (or beginning of prestress) and the CL of Bearing (BRG)

x = 5.00 in.

accounting for bridge skew gives a long. distance from the face of girder as,

x = 5.00 in.

f_{po} = **114.68** **ksi**

Factored Moment

Where: **Factored moment** is not to be taken less than $V_u d_v$ LRFD 5.8.3.4.2

$M_u = \Sigma (\eta_i \gamma i M_i)$ LRFD 1.3.2.1-1

Ultimate moment at d_v from support, M_u

Girder, M_g =	28.8	ft-kips
Traffic Barrier, M_{tb} =	6.6	ft-kips
Deck + Legs, M_{D+L} =	11.7	ft-kips
M_{DC} =	47.0	ft-kips
M_{LL+IM} x DF_{MExt} =	45.5	ft-kips

Moment Force Effect,

$M_u = 1.00(1.25M_{DC} + 1.50M_{DW} + 1.75M_{LL+IM})$ LRFD TABLE 3.4.1-1

M_u = 138.5 ft-kips = 1661.5 in - kips

Check which value governs:

$V_u d_v$ = 2381.0 in - kips **governs**

M_u = 1661.5 in - kips

Longitudinal Strain (Flexural Tension)

WSDOT Design Memo Shear Design, 6/18/2001 & LRFD 5.8.3.4.2-1

The section contains at least the minimum transverse reinforcement as specified in Article 5.8.2.5. Longitudinal strain in the "web reinforcement" on the flexural tension side of the member,

$$\varepsilon_x = \frac{\left[\frac{M_u}{d_v} + 0.5N_u + \left|V_u - V_p\right| - A_{ps} f_{po}\right]}{2(E_s A_s + E_p A_{ps})} \leq 0.002$$

Applied Factored Axial forces,

N_u = [0.00] kips

Factored Shear,

V_u = 141.36 kips

Vertical Component of Prestress Forces,

V_p = 0.00

Area of prestressing steel on the flexural tension side of the member,

$A_{ps(T)} = N_{bb}$ x A_{ps} = 4.34 $in.^2$

Prestress/Concrete Modulus of Elasticity Parameter

f_{po} = 114.68 ksi

Modulus of Elasticity of Mild Reinforcement,

E_s = 29000 ksi

Area of Mild Reinforcement in flexural tension side of the member,

$A_{s(bottom)} = n_{s(bottom)} A_s$

Where there are [4] No. [4] bars BDM fig. 5-A-XX

$A_{s(bottom)}$ = 0.80 $in.^2$

Modulus of Elasticity of Prestress Strands,

E_p = 28500 ksi

Substitution gives,

ε_x = -0.0007317 **< 0, so use the following Equation 3:** LRFD 5.8.3.4.2-1

If the value of e_x from LRFD Equations 5.8.3.4.2-1 or 2 is negative, the strain shall be taken as:

$$\varepsilon_x = \frac{\left[\frac{M_u}{d_v} + 0.5N_u + (V_u - V_p) - A_{ps}f_{po}\right]}{2(E_cA_c + E_sA_s + E_pA_{ps})}$$

WSDOT Design Memo Shear Design, 6/18/2001 & LRFD Eqn. 5.8.3.4.2-**3**

Where: Modulus of Elasticity of Concrete,

E_c = 5871.1 ksi

Area of concrete on the flexural tension side of the member,

A_c = 216.00 $in.^2$

Substitution gives,

e_x = -0.0000760 **Equation 3 Governs**

e_x = -0.0000760

Determination of β and θ

Shear Stress Ratio of:	0.052	Is a value just	≤	0.075
1000 x the Long. Strain:	-0.076	Is a value just	≤	-0.05

From Table 1: **θ = 21.00 deg.** **β = 4.10**

LRFD Table 5.8.3.4.2-1 & See Theta and Beta Worksheet

Shear strength

LRFD 5.8.3.3

$V_r = fV_n$ LRFD 1.3.2.1-1

Nominal shear strength shall be taken as:

$V_n = V_c + V_s + V_p$ LRFD 5.8.3.3-1

Shear resistance provided by concrete :

$$V_c = 0.0316\beta\sqrt{f_c'}b_v d_v$$ LRFD 5.8.3.3-3

Shear taken by shear reinforcements :

$V_s = V_n - V_c - V_p$

f = 0.90 for shear LRFD 5.5.4.2

V_n = Nominal shear strength

Required shear strength

LRFD 5.8.3.3

Nominal shear strength shall be taken as the lesser of :

$V_n = V_c + V_si + V_p$ = 221.4 kips **governs** LRFD 5.8.3.3-1

$V_n = 0.25f'_cb_vd_v + V_p$ = 751.6 kips LRFD 5.8.3.3-2

Initial Shear from stirrups, based on 12" spacing of #4 bars

$$V_s i = \frac{A_v f_y d_v \cot\theta}{s_{gov}} = 87.75 \quad \text{kips}$$ LRFD C5.8.3.3-1

Shear resistance provided by concrete :

$$V_c = 0.0316\beta\sqrt{f_c'}\, b_v d_v = \quad 133.6 \quad \text{kips}$$ LRFD 5.8.3.3-3

Shear taken by shear reinforcement:

$V_{sreq} = V_u/\phi - V_c - V_p =$ 23.5 kips LRFD 5.8.3.3-1

Spacing of shear reinforcements :

Try 2 legs of # **4** Av = 0.40 $in.^2$

Required Spacing, $s_{req'd} = \frac{A_v f_y d_v \cot\theta}{V_s} = 44.87$ in. LRFD C5.8.3.3-1

Maximum spacing of shear reinforcement

if $v_u < 0.125\ f'_c$ then $s_{max} = 0.8\ dv <$ ~~24 in.~~ 18 in. LRFD 5.8.2.7-1

Maximum spacing of shear reinforcement, WSDOT Practice = 18.00 in

if $v_u >= 0.125\ f'c$ then $s < 0.4\ dv < 12$ in.

$v_u =$ 0.444 ksi LRFD 5.8.2.7-2

0.125 f'c = 1.063 ksi > $v_u =$ 0.444 ksi

Maximum spacing, s_{max} =	**13.5**	**in.**	**Governs spacing**
Governing spacing, s_{gov} =	**13.0**	**in.**	

$A_{v(provided)} =$ 0.40 $in.^2$ Assuming two #4 legs

$$V_s = \frac{A_v f_y d_v \cot\theta}{s_{gov}} = 81.00 \quad \text{kips}$$ LRFD C5.8.3.3-1

Shear reinforcement is required if : $0.5f(V_c+V_p) < V_u$ LRFD 5.8.2.4-1

$0.5f(V_c+V_p) =$ 60.1 < Vu = 141.4 kips

Yes, Shear/Transverse Reinf. Is Required

Minimum shear reinforcement

LRFD 5.8.2.5

When shear reinforcement is required by design, the area of steel provided,

$A_{v(provided)} \geq 0.0316\sqrt{f_c'}\,\frac{b_v s_{gov}}{f_y}$ Use Spacing: 12.00 in ≤ 13.0 in LRFD 5.8.2.5-1

OK

where :

s = 12.0 in.

Required Area of Steel,

$0.0316\ \sqrt{f_c'}\,\frac{b_v s_{gov}}{f_y} =$ 0.39 $in.^2$

0.40 > 0.39 $in.^2$ **OK for Min. Transverse Reinf.**

Longitudinal reinforcement

LRFD 5.8.3.5

Longitudinal reinforcement shall be provided so that at each section the following equations are satisfied :

$$A_s f_y + A_{ps} f_{ps}\left(\frac{d_v}{l_t}\right) \geq T = \frac{M_u}{d_v \phi} + \frac{0.5N_u}{\phi} + \left(\frac{V_u}{\phi} - 0.5V_s - V_p\right)\cot\theta$$ LRFD 5.8.3.5-1

A_s =	0.80	in^2		BDM fig. 5-A-XX
f_y =	60.00	ksi		
A_{ps} =	4.34	in^2	Area of prestressing steel on the flexural tension side of the member (w/o unbonded)	
f_{ps} =	233.01	ksi	f_{ps} multiplied by d_v/l_t ratio to account for lack of prestress development	
d_v =	16.84	in.		
l_t =	3.00	ft =	36.00 in	
M_u =	198.4	ft-kips		
f =	1.00		Flexural in prestressed concrete	LRFD 5.5.4.2
f =	0.90		Shear	"
f =	0.75		Axial Compression	"
N_u =	0.00			
V_u =	141.36	kips		
V_s =	81.00	kips		
V_p =	0.00	kips		
q =	21.00	degree		

by substitution:

521.135 ≥ 445.0 kips **OK for Longitudinal Reinforcement**

13 Deflection and Camber

LRFD 5.7.3.6.2

Let downward Deflection be Positive +

Let upward Deflection, Camber, be Negative -

Deflection due to prestressing forces at Transfer

Deflection due to bottom strands is computed from a combination of fully bonded strands and the partially bonded or "debonded" strands which are sleeved at the ends of the girder. Each type has their own eccentricity.

$$\Delta ps_{bot.} = \Delta ps_{bb} + \Delta ps_{db}$$

$$\Delta ps_{bb} + \Delta ps_{db} = \left(P_{bb} e_{bb} + k_{db} P_{db} e_{db}\right)\frac{L^2}{8E_{ci} I_c}$$

Force and eccentricity due to the bonded bottom prestress strands are:

P_{bb} = 819.66 kips e_{bb} = 6.40 in

Reduction factor for the partially bonded or debonded strands

$$k_{db} = \frac{L - 2l_{db}}{L} = 0.847$$

The average sleeved length of the debonded strands,

l_{db} = 4.5 ft = 54.0 in

Force and eccentricity due to the debonded bottom prestress strands are:

P_{db} = 0.00 kips e_{db} = 7.00 in

$Dps_{bot.}$ = -2.786 in. upward

Deflection due to top strands is computed from :

$$\Delta ps_{top} = \frac{P_t e_t L^2}{8 E_{ci} I_c}$$

Prestressing force and eccentricity of top strands.

P_t = 163.9 kips e_t = -6.00 in.

Δps_{top} = 0.522 in. downward

Total deflection due to prestressing :

$\Sigma \Delta_{ps}$ = -2.79 + 0.52 = -2.263 in. upward

Deflection due to weight of Girder

$$\Delta_g = \frac{5 w_g L^4}{384 E_{ci} I_c} = 1.66 \text{ in. downward}$$

AISC LRFD page 4-190

Deflection due to weight of Traffic Barrier TB

$$\Delta_{tb} = \frac{5 w_{tb(3G)} L^4}{384 E_c I_c} = 0.18 \text{ in. downward}$$

"

Deflection due to weight of Deck and Legs

$$\Delta_{SIDL} = \frac{5 w_{SIDL} L^4}{384 E_c I_c} = 1.58 \text{ in. downward}$$

"

Deflection (Camber) at transfer, C_i

Deflection accounted at transfer are due to prestressing and weight of girder :

At transfer : $\sum \Delta i$ = -2.26 + 1.66 = -0.60 in

Creep Coefficients

$C_F = -[(\Delta_{ps}+\Delta_g)(\psi_{(t,ti)}+1)]$

Creep Coefficient :

$\Psi_{(t,ti)} = 1.9\ k_{vs}k_{hc}k_fk_{ta}t_i^{-0.118}$ LRFD 5.4.2.3.2-1

$k_{vs} = 1.45 - .13(v/s) \geq 1.0$ LRFD 5.4.2.3.2-2

$k_{hc} = 1.56 - .008H$ H = **80.00** average humidity (AASHTO fig. 5.4.2.3.3-1) LRFD 5.4.2.3.2-3

$k_f = 5/(1+f'_{ci})$ LRFD 5.4.2.3.2-4

$k_{td} = t/(61-4*f'_{ci}+t)$ LRFD 5.4.2.3.2-5

V/S = 4.03 in Void end from end of girder = 15 in. LRFD 5.4.2.3.2

Table 13-1:

	t_i	t	k_{vs}	khc	k_f	k_{td}	$\Psi_{(t,ti)}$
$\Psi_{(7,30)}$	7.00	30.00	1.00	0.92	0.63	0.48	0.41
$\Psi_{(30,40)}$	30.00	40.00	1.00	0.92	0.63	0.55	0.40
$\Psi_{(7,40)}$	7.00	40.00	1.00	0.92	0.63	0.55	0.48
$\Psi_{(7,90)}$	7.00	90.00	1.00	0.92	0.63	0.73	0.64
$\Psi_{(90,120)}$	90.00	120.00	1.00	0.92	0.63	0.78	0.50
$\Psi_{(7,120)}$	7.00	120.00	1.00	0.92	0.63	0.78	0.68

Assume 1 Day of accelerated cure by radiant heat or steam. 1 Day accelerated cure = 7 normal Days of cure. Age of Concrete when load is initially applied, LRFD 5.4.2.3.2

Final Deflections Due to All Loads and Creep

"D" Parameters for Minimum Timing

$\Delta cr.min = \Psi(7,40)*(\Delta psbot+\Delta pstop+\Delta g) =$ -0.28 in

$D40 = \Delta psbot+\Delta pstop+\Delta g+\Delta cr.min =$ -0.88 in

"D" Parameters for Maximum Timing

$\Delta cr.max = \Psi(7,120)*(\Delta psbot+\Delta pstop+\Delta g) =$ -0.41 in

$D120 = \Delta psbot+\Delta pstop+\Delta g+\Delta cr.max =$ -1.01 in

Elastic deflection due to slab and Traffic barrier

$C = \Delta sidl+\Delta tb =$ 0.76 in

Excess girder camber

Δexcess = D40 + C =	-0.13	in
Δexcess = D120 + C =	-0.25	in

Time period to display (40, 120) = 40.00 Deck thickness at Piers = **5.13** in.

Fig. 13-1 Time Vs. Deflection Curve

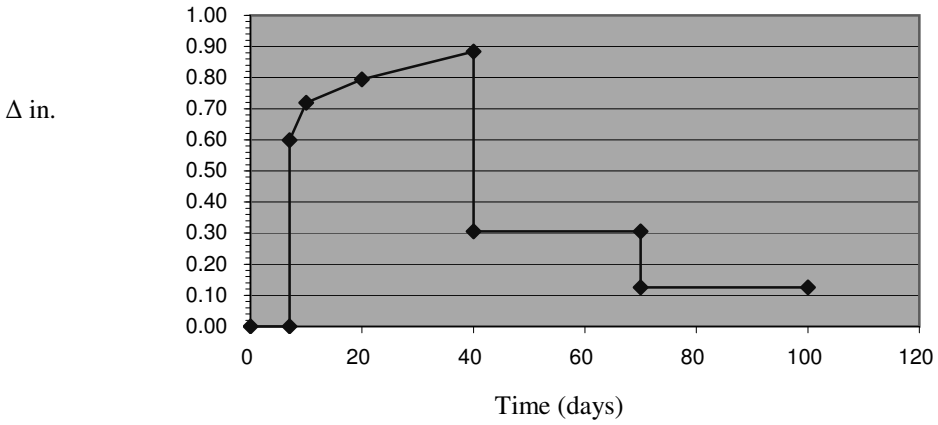

Appendix 5-B10 Positive EQ Reinforcement at Interior Pier of a Prestressed Girder

Design Specifications:

AASHTO LRFD Bridge Design Specifications 4th Edition dated 2007 and Interims Through 2008.

Strand for Positive EQ Moment:

For girders made continuous for live load, extended bottom prestress strands are used to carry positive EQ load, creep, and other restrained moments from one span to another.

Strands used for this purpose must be developed in the short distance between the two girder ends. The strand end anchorage device used, per WSDOT Standard Plan, is a 2'-0" strand extension with strand chuck and steel anchor plate.

The number of strands to be extended cannot exceed the number of straight strands available in the girder and shall not be less than four.

The design moment at the center of gravity of superstructure is calculated using the following:

$$M_{po}^{CG} = M_{po}^{top} + \frac{\left(M_{po}^{top} + M_{po}^{Base}\right)}{L_c} h$$

where:

M_{po}^{top} = plastic overstrength moment at top of column, kip-ft.

M_{po}^{Base} = plastic overstrength moment at base of column, kip-ft.

h = distance from top of column to c.g. of superstructure, ft.

L_c = column clear height used to determine overstrength shear associated with the overstrength moments, ft.

This moment is resisted by the bent cap through torsion forces. The torsion in the bent cap is distributed into the superstructure based on the relative flexibility of the superstructure and the bent cap.

Hence, the superstructure does not resist column overstrength moments uniformly across the width. To account for this, an effective width approximation is used, where the maximum resistance per unit of superstructure width of the actual structure is distributed over an equivalent effective width to provide an equivalent resistance.

It has been suggested that for concrete bridges, with the exception of box girders and solid superstructure, this effective width should be calculated as follows:

$B_{eff} = D_c + D_s$

where:

D_c = diameter of column

D_s = depth of superstructure including cap beam

Based on the structural testing conducted at the University of California at San Diego La Jolla, California in the late 1990's (Holombo 2000), roughly two-thirds of the column plastic moment to be resisted by the two girders adjacent to the column (encompassed by the effective width) and the other one-third to be resisted by the non-adjacent girders.

Based on the effective width, the moment per girder line is calculated as follows:

adjacent girders (encompassed by the effective width):

$$M_{sei}^{Int} = \frac{2M_{po}^{CG}}{3N_g^{\text{int}}}$$

non-adjacent girders:

$$M_{sei}^{Ext} = \frac{M_{po}^{CG}}{3N_g^{ext}}$$

Seismic Moment:

if $M_{sei}^{Int} \geq M_{sei}^{Ext}$

$$M_{sei} = M_{sei}^{Int}$$

if $M_{sei}^{Int} < M_{sei}^{Ext}$

$$M_{sei} = \frac{M_{po}^{CG}}{N_g^{\text{int}} + N_g^{ext}}$$

where:

N_g^{int} = Number of girder encompassed by the effective width.

N_g^{ext} = Number of girder outside the effective width.

Number of extended straight strands needed to develop the required moment capacity at the end of girder is based on the yield strength of the strands.

$$N_{ps} = 12[M_{sei} \cdot K - M_{SIDL}] \cdot \frac{1}{0.9\phi A_{ps} f_{py} d}$$

where:

A_{ps} = area of each extended strand, in^2

f_{py} = yield strength of prestressing steel specified in LRFD Table 5.4.4.1-1

d = distance from top of slab to c.g. of extended strands, in.

M_{SIDL} = moment due to SIDL (traffic barrier, sidewalk, etc.) per girder

K = span moment distribution factor use maximum of (K1 and K2)

ϕ = flexural resistance factor

Assume EI is constant and Girders have fixed-fixed supports for both spans.

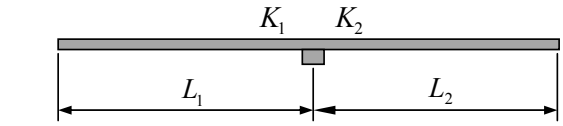

$$K_1 = \frac{L_1}{L_1 + L_2} \qquad K_2 = \frac{L_2}{L_1 + L_2}$$

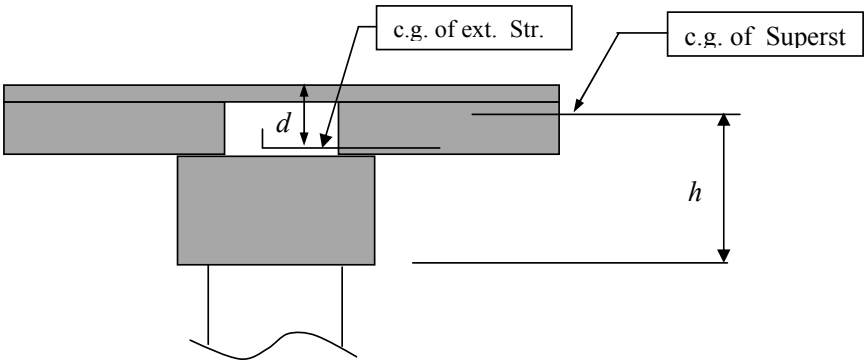

References:

Holombo, J., M.J.N. Priestley, and F. Seible, "Continuity of Precast Prestressed Spliced-Girder Bridge Under Seismic Loads", PCI Journal, 45(2), 40-63, March-April, 2000.

Given:

D_c	=	5.00 ft. diameter of column
D_s	=	12.93 ft. depth of superstructure including cap beam
B_{eff}	=	5 + 12.93 = 17.93 ft.
f'_c	=	4.00 ksi, specified compressive strength of deck concrete, Class 4000D.
d_b	=	0.6" nominal strand diameter =0.217 in^2
f_{pu}	=	270 ksi specified tensile strength of prestressing strands. LRFD Table 5.4.4.1-1
f_{py} =		243 ksi ksi for low relaxation strand
ϕ	=	1.00 resistance factor (LRFD C 1.3.2.1, for extreme event limit state)
N_g^{int}	=	3 number of girders encompassed by the effective width
N_g^{ext}	=	2 number of prestressed girders in the pier
GTYP	=	W83G H = 82.625" girder depth
A	=	9.50 " "A" Dimension including 1/2" Integral W.S.
t_s	=	7.50 " effective slab thickness (not including 1/2" Integral W.S.)
$Y_{t\ slab}$	=	36.86 " c.g. of superstructure to top of slab (see PGSuper output)
b	=	81.00 " effective flange width (PGSuper Output & LRFD 4.6.2.6.1)
h	=	116.64 " distance from top of column to c.g. of superstructure
L_1	=	176.63 ft. Span length of span 1. Factor = 1.33

L_2 = 180.00 ft. Span length of span 2. Factor = 1.00

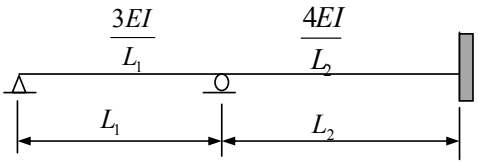

Far End Condition	
Pin	1.33
Fixed	1.00

L_c = 25.00 ft. column clear height used to determine overstrength shear associated with the overstrength moments, ft.

M_{po}^{top} = 16000.0 plastic overstrength moment at top of column, kip-ft

M_{po}^{Base} = 16500.0 plastic overstrength moment at base of column, kip-ft.

M_{SIDL} = 517.0 moment due to SIDL (traffic barrier, sidewalk, etc.) per girder, kip-ft (see QconBridge Output)

γ_P = 0.90

Design Steps:

Step 1:

Calculate the design moment at the center of gravity of superstructure

M_{po}^{CG} = 16000 + (16000 + 16500) / 25 * 116.64 / 12 = 28636 kip-ft

Step 2:

Calculate the design moment per girder.

M_{sei}^{Int} = 2/3 * 28636 / 3 = 6363.56 kip-ft

M_{sei}^{Ext} = 1/3 * 28636 / 2 = 4772.67 kip-ft

M_{sei}^{Avg} = 28636 / (3 + 2)= 5727.2 kip-ft = 6363.56 kip-ft.

L_1 = 234.92 ft. (Modified) K_1 = 180 / (234.92 + 180) = 0.434

L_2 = 180.00 ft. (Modified) K_2 = 234.92 / (234.92 + 180) = 0.566

K = 0.566

Design Moment per girder

M_{des} = 0.566 * 6363.56 - 0.9 * 517 = 3137.61 ft-kips per girder

Step 3:

Calculate the number of extended strand required

cs = 3.00" c.g. of extended strands to bottom of girder

d = 9.5 - 0.5 + 82.625 - 3 = 88.625 "

assume f_{py} = 243 ksi

Number of extended strand required =
12 * 3137.61/(0.9 * 1 * 0.217 * 243 * 88.625) = 9 strands

Use = N_{ps} 10 extend strands - Use even number of strands

Step 4:

Check moment capacity of extended strands

cs = 3.00" c.g. of extended strands to bottom of girder

Per LRFD 5.7.3.2 The factored flexural resistance

$M_r = \phi M_n$ $M_n = A_{ps} f_{py} (d_p - \frac{a}{2})$

where:

A_{ps} = area of prestressing steel, in^2. =10 * 0.217 = 2.17 in^2

d_p = distance from extreme compression fiber to the centroid of prestressing tendons (in.)

d_p = 9.5 - 0.5 + 82.625 - 3 = 88.625"

Assume rectangular behavior:

$$c = \frac{A_{ps} f_{py}}{0.85 f'_{ce} \beta_1 b}$$

$\beta_1 = 0.85$ for $f'_{ce} \le 4000\ psi$

$\beta_1 = 0.85 - 0.05 \frac{f'_{ce} - 4000}{1000} \ge 0.65$ for $f'_{ce} > 4000\ psi$

f_c = 4.00 ksi = 1.3 * 4 = 5.2 ksi = 0.79

c = 2.17 * 243/0.85 * 5.2 * 0.79 * 81 = 1.864 "

a = 0.79 * 1.864 = 1.473" depth of the equivalent stress block (in.)

M_n = 2.17 * 243 * (88.625 - 1.473/2)/12 = 3862.04 kip-ft.

M_r = 1 * 3862.04 = 3862.04 kip-ft. > = 3137.61 ft-kips OK

LRFD Wingwall Design - Vehicle Collision

Problem Description: A wingwall with traffic barrier is to be checked for moment capacity at a vertical section at the abutment for a vehicular impact.

AASHTO LRFD Specifications Extreme Event-II Limit State (Test Level TL-4)

$L := 15ft$	Wingwall Length	
$h := 2.5ft$	Height of wingwall at end away from pier.	
$S := 2ft$	Traffic surcharge (given in height of soil above road). See LRFD Tables 3.11.6.4-1 and 3.11.6.4-2.	
$GroundSlope := 2$	to 1	
$W := 45 \cdot \frac{lbf}{ft^2 \cdot ft}$	Lateral Earth Pressure (equilivant fluid pressure per foot)	
$F_t := 54kip$	Transverse Collision Load	§ Table A13.2-1 LRFD AASHTO
$L_t := 3.5ft$	Collision Dist. Width	§ Table A13.2-1 LRFD AASHTO
$\gamma_{CT} := 1$	Collision Load Factor	§ Table 3.4.1-1 LRFD AASHTO
$\gamma_{EH} := 1.35$	Horizontal Earth Load Factor	§ Table 3.4.1-2 LRFD AASHTO
$\gamma_{LS} := 0.5$	Live Load Surcharge Load Factor for Extreme Event II	§ Table 3.4.1-2 LRFD AASHTO

Transverse Collision Force Moment Arm

$$MomentArm := L - \frac{L_t}{2} \qquad MomentArm = 13.25\,ft$$

Wall Height at Abutment

$$H := h + \left(\frac{L}{GroundSlope}\right) \qquad H = 10.00\,ft$$

Flexural Moment due to Collision Load and Earth Pressure

$$FlexuralMoment := \gamma_{CT} \cdot F_t \cdot MomentArm + \gamma_{EH} \cdot \frac{W \cdot L^2}{24} \cdot \left[3 \cdot h^2 + \left(H + 4 \cdot S \cdot \frac{\gamma_{LS}}{\gamma_{EH}}\right) \cdot (H + 2 \cdot h)\right]$$

$$FlexuralMoment = 836.92\,kip \cdot ft$$

$$M_u := \frac{FlexuralMoment}{H} \qquad M_u = 83.69 \frac{kip \cdot ft}{ft}$$

Determine Required Wall Thickness and Reinforcement

$\phi := 1$ Resistance Factor (1.0 for Extreme Event and 0.9 for Strength as per LRFD 1.3.2.1 and 5.5.4.2)

$f_y := 60 \cdot ksi$

$f'c := 4 \cdot ksi$

$\beta_1 := .85$ § 5.7.2.2 LRFD AASHTO

$b := 1ft$

$\rho := .01848$ Vary this ratio to pass LRFD Maximum Reinforcement check below

$d_{bar} := 1.00in$ Diameter of #8 Bar

$A_{bar} := .786in^2$ Area of #8 Bar

$R_n := \rho \cdot f_y \cdot \left(1 - .5 \cdot \rho \cdot \frac{f_y}{.85 \cdot f'c}\right)$ $R_n = 0.93 \frac{kip}{in^2}$

$d := \sqrt{\frac{M_u \cdot 1ft}{b \cdot \phi \cdot R_n}}$ $d = 9.50\,in$

$MinCover := 2.0in + \frac{d_{bar}}{2}$ $MinCover = 2.50\,in$ To c.g. of reinforcement

$ReqWallThickness := d + MinCover$ $ReqWallThickness = 12.00\,in$

$LongReinfSpacing := \frac{A_{bar}}{\rho \cdot d}$ $LongReinfSpacing = 4.48\,in$ For #8 Bar

Check Maximum Reinforcement for LRFD: § 5.7.3.3.1 LRFD AASHTO

$c := \frac{\rho \cdot b \cdot d \cdot f_y}{.85 f'c \cdot \beta_1 \cdot b}$ $c = 3.64\,in$ § 5.7.3.1.1 LRFD AASHTO

$\frac{c}{d} = 0.38$ OK Must be less than or equal to .42

Define Units $ksi \equiv 1000 \cdot psi$ $kip \equiv 1000 \cdot lbf$ $kcf \equiv kip \cdot ft^{-3}$ $klf \equiv 1000 \cdot lbf \cdot ft^{-1}$

$MPa \equiv Pa \cdot 10^{6}$ $N \equiv 1 \cdot newton$ $kN \equiv 1000 \cdot N$

Find the flexural strength of a W83G girder made composite with a 7.50 in. thick cast-in-place deck, of which the top 0.50 in. is considered to be a sacrificial wearing surface. The girder spacing is 6.0 ft. To simplify the calculations, ignore the contribution of any non-prestressed reinforcing steel and the girder top flange. The girder configuration is shown in **Figure 1** with 70-0.6 in. diameter strands, and concrete strengths of 6000 psi in the deck and 15000 psi in the girder.

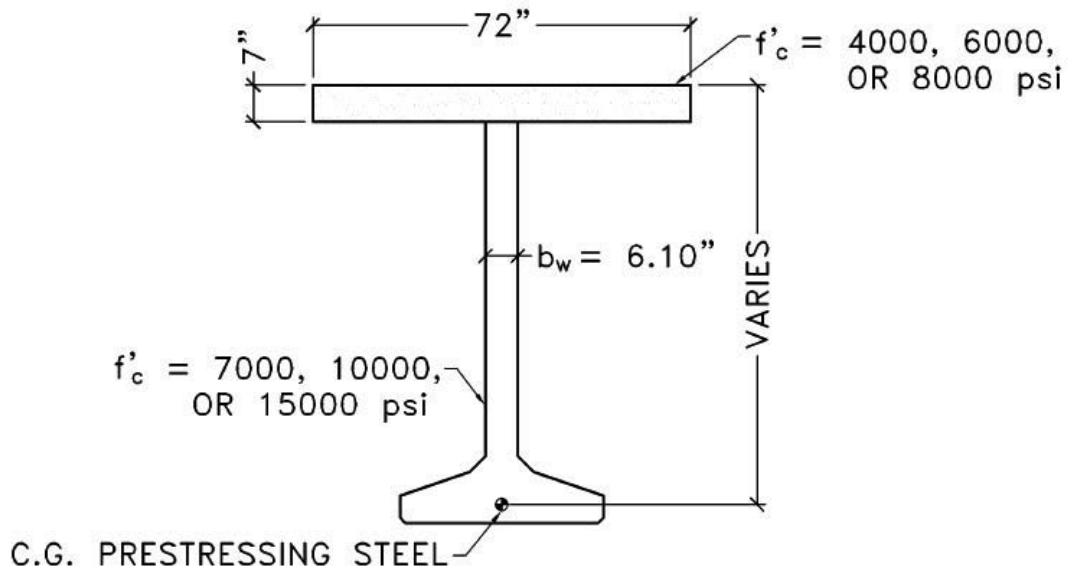

Figure 1

Bare W83G Bridge Girder Data

Depth of girder	h = 82.68 in.
Width of girder web	b_w = 6.10 in.
Area of prestressing steel	A_{ps} = 15.19 in.^{2}
Specified tensile strength of prestressing steel	f_{pu} = 270.00 ksi
Initial jacking stress	f_{pj} = 202.50 ksi
Effective prestress after all losses	f_{pe} = 148.00 ksi
Modulus of Elasticity of prestressing steel	E_p = 28,600 ksi

Design concrete strength $f_c' = 15000$ psi

Composite W83G Bridge Girder Data

Overall composite section depth $H = 89.68$ in.

Deck slab width $b = 72.00$ in.

Deck slab thickness $t = 7.50$ in.

Structural deck slab thickness $h_f = 7.00$ in.

Depth to centroid of prestressing steel $d_p = 85.45$ in.

Design concrete strength $f_c' = 6000$ psi

$$\varepsilon_{ps} = 0.003\left(\frac{d_p}{c} - 1\right) + \left(\frac{f_{pe}}{E_p}\right) = 0.003\left(\frac{85.45}{30.75} - 1\right) + \left(\frac{148.00}{28{,}600}\right)$$

$$f_{si} = \varepsilon_{ps}\left[887 + \frac{27{,}613}{\left(1 + \left(112.4\varepsilon_{ps}\right)^{7.36}\right)^{1/7.36}}\right] \leq$$

$$= (0.010511)\left[887 + \frac{27{,}613}{\left(1 + \left(112.4(0.010511)\right)^{7.36}\right)^{1/7.36}}\right]$$

$$\sum A_{si}F_{si} = A_{ps}f_{si} = (15.19)(246.56)\ \ a = \beta_{1(ave)}c = (0.719)(30.75)$$

$$\beta_{1(ave)} = \sum_j \left(f_c' A_c \beta_1\right)_j \Big/ \sum_j \left(f_c' A_c\right)_j = \frac{[(6)(7)(72)(0.75) + (15)(22.1-7)(6.10)(0.65)]}{[6(7)(72) + (15)(22.1-7)(6.10)]}$$

$$\sum F_{cj} = 0.85 f'_{c(deck)} h_f b + 0.85 f'_{c(girder)}\left(a - h_f\right) b_w$$
$$= 0.85(6)(7)(72) + 0.85(15)(22.10-7)(6.10)$$

$$M_n = 0.85 f'_{c(deck)} h_f b\left(d_p - \frac{h_f}{2}\right) + 0.85 f'_{c(girder)}\left(a - h_f\right) b_w\left(d_p - h_f - \frac{\left(a - h_f\right)}{2}\right)$$

$$= 0.85(6)(7)(72)\left(85.45 - \frac{7}{2}\right) + 0.85(15)(22.1-7)(6.10)\left(85.45 - 7 - \frac{(22.1-7)}{2}\right)$$

$$d_t = H - 2 = 89.68 - 2\ \ \phi = 0.5 + 0.3\left(\frac{d_t}{c} - 1\right) = 0.5 + 0.3\left(\frac{87.68}{30.75} - 1\right)$$

$$\phi M_n = 1.00(293{,}931)\ \varepsilon_{ps} = 0.003\left(\frac{d_p}{c} - 1\right) + \left(\frac{f_{pe}}{E_p}\right) = 0.003\left(\frac{85.45}{32.87} - 1\right) + \left(\frac{148.00}{28{,}600}\right)$$

$$f_{si} = \varepsilon_{ps}\left[887 + \frac{27{,}613}{\left(1 + \left(112.4\varepsilon_{ps}\right)^{7.36}\right)^{1/7.36}}\right] \leq$$

$$= (0.009974)\left[887 + \frac{27{,}613}{\left(1 + (112.4(0.009974))^{7.36}\right)^{1/7.36}}\right]$$

$$\sum A_{si}F_{si} = A_{ps}f_{si} = (15.19)(242.83)\ a = \beta_1 c = (0.65)(32.87)$$

$$\sum F_{cj} = 0.85f'_{c(deck)}h_f b + 0.85f'_{c(girder)}\left(a - h_f\right)b_w$$
$$= 0.85(6)(7)(72) + 0.85(15)(21.37 - 7)(6.10)$$

$$M_n = 0.85f'_{c(deck)}h_f b\left(d_p - \frac{h_f}{2}\right) + 0.85f'_{c(girder)}\left(a - h_f\right)b_w\left(d_p - h_f - \frac{\left(a - h_f\right)}{2}\right)$$

$$= 0.85(6)(7)(72)\left(85.45 - \frac{7}{2}\right) + 0.85(15)(21.37 - 7)(6.10)\left(85.45 - 7 - \frac{(21.37 - 7)}{2}\right)$$

$$d_t = H - 2 = 89.68 - 2\ \phi = 0.5 + 0.3\left(\frac{d_t}{c} - 1\right) = 0.5 + 0.3\left(\frac{87.68}{32.87} - 1\right)$$

$$\phi M_n = 1.00(290{,}323)$$

Flexural Strength – Strain Compatibility with Non-Linear Concrete Stress Block

The concrete stress-strain curves for both the deck and girder concrete are taken from Collins and Mitchell (see BDM 5.1.1).. The “power formula” of the PCI BDM (se BDM 5.1.3) is used to determine the stress in the prestressing steel for each iteration.

The concrete compression block is divided into (100) slices, (21) equal slices in the flange and (79) equal slices in the web for this case. The strain at the center of each slice was used to determine the average stress within that slice, which was multiplied by the area of the slice to determine the force in each slice.

The product of these forces and the distance to the center of each force from the top of the deck was used to calculate the resultant forces and eccentricities in the flange and

web. Example calculations for the stresses in the slice at the top of the deck, at the interface between the deck and girder, and the prestressing steel are as follows:

For the deck concrete,

$$E_c = \frac{\left(40{,}000\sqrt{f_c'} + 1{,}000{,}000\right)}{1000} = \frac{\left(40{,}000\sqrt{6000} + 1{,}000{,}000\right)}{1000}$$

= 4098 ksi

$$n = 0.8 + \frac{f_c'}{2500} = 0.8 + \frac{6000}{2500} = 3.20$$

$$k = 0.67 + \frac{f_c'}{9000} = 0.67 + \frac{6000}{9000} = 1.337$$

$$\varepsilon_c' \times 1000 = \frac{f_c'}{E_c}\frac{n}{n-1} = \frac{6000}{4098}\frac{3.2}{3.2-1} = 2.129$$

For the top slice of deck,

$$y = \frac{7}{21(2)} = 0.167 \text{ in.}$$

$$\varepsilon_{cf} = \frac{0.003}{c}(c - y) = \frac{0.003}{34.42}(34.42 - 0.167) = 0.002985$$

$$f_c = (f_c')\frac{n(\varepsilon_{cf}/\varepsilon_c')}{n - 1 + (\varepsilon_{cf}/\varepsilon_c')^{nk}} = (6)\frac{3.2(0.002985/0.002129)}{3.2 - 1 + (0.002985/0.002129)^{3.2(1.337)}}$$

= 4.18 ksi (28.8 MPa)

The contribution of this slice to the overall resultant compressive force is

$$C_1 = (4.18ksi)(72in)\left(\frac{7}{21}in\right) = 100.32kip$$

For bottom slice of deck,

$$y = \frac{7}{21}(20) + \frac{7}{21(2)} = 6.833 \text{ in.}$$

$$\varepsilon_{cf} = \frac{0.003}{c}(c - y) = \frac{0.003}{34.42}(34.42 - 6.833) = 0.002404$$

$$f_c = (f_c')\frac{n(\varepsilon_{cf}/\varepsilon_c')}{n - 1 + (\varepsilon_{cf}/\varepsilon_c')^{nk}} = (6)\frac{3.2(0.002404/0.002129)}{3.2 - 1 + (0.002404/0.002129)^{3.2(1.337)}}$$

= 5.59 ksi

The contribution of this slice to the overall resultant compressive force is

$$C_{21} = (5.59ksi)(72in)\left(\frac{7}{21}in\right) = 134.16kip$$

For girder concrete,

$$E_c = \frac{\left(40{,}000\sqrt{f_c'} + 1{,}000{,}000\right)}{1000} = \frac{\left(40{,}000\sqrt{15000} + 1{,}000{,}000\right)}{1000}$$

= 5899 ksi (40674 MPa)

$$n = 0.8 + \frac{f_c'}{2500} = 0.8 + \frac{15000}{2500} = 6.80$$

$$k = 0.67 + \frac{f_c'}{9000} = 0.67 + \frac{15000}{9000} = 2.337$$

$$\varepsilon_c' \times 1000 = \frac{f_c'}{E_c}\frac{n}{n-1} = \frac{15000}{5899}\frac{6.8}{6.8-1} = 2.981$$

For the top slice of girder,

$$y = 7 + \frac{27.42}{79(2)} = 7.174 \text{ in.}$$

$$\varepsilon_{cf} = \frac{0.003}{c}(c - y) = \frac{0.003}{34.42}(34.42 - 7.174) = 0.002375$$

Since $\varepsilon_{cf}/\varepsilon_c' = 0.002375/0.002981 = 0.797 < 1.0,\ k = 1.0$

$$f_c = (f_c')\frac{n(\varepsilon_{cf}/\varepsilon_c')}{n-1+(\varepsilon_{cf}/\varepsilon_c')^{nk}} = (15)\frac{6.8(0.002375/0.002981)}{6.8-1+(0.002375/0.002981)^{6.8(1.0)}}$$

= 13.51 ksi

The contribution of this slice to the overall resultant compressive force is

$$C_{22} = (13.51ksi)(6.10in)\left(\frac{34.42-7.0}{79}in\right) = 28.60kip$$

For the prestressing steel:

$$\varepsilon_{ps} = 0.003\left(\frac{d_p}{c} - 1\right) + \left(\frac{f_{pe}}{E_p}\right) = 0.003\left(\frac{85.45}{34.42} - 1\right) + \left(\frac{148}{28500}\right) = 0.00964$$

$$f_{ps} = \varepsilon_{ps}\left[887 + \frac{27{,}613}{\left(1+\left(112.4\varepsilon_{ps}\right)^{7.36}\right)^{1/7.36}}\right] \le 270\,ksi$$

$$f_{ps} = (0.00964)\left[887 + \frac{27{,}613}{\left(1+\left(112.4\times 0.00964\right)^{7.36}\right)^{1/7.36}}\right] = 239.93ksi$$

The resultant force in the prestressing steel is

$$T = (239.93ksi)(15.19in^2) = 3644.6kip$$

The overall depth to the neutral axis, c, was varied until the sum of the compressive force in all the concrete slices equaled the tension force in the prestressing steel. Equilibrium was achieved at a compressive force in the slab of 2473 kip, 3.68" below the top of slab and a compressive force in the girder of 1169kip, 16.20" below the top of slab. Summing moments about the centroid of the prestressing steel,

$$M_n = 2473(85.45 - 3.68) + 1169(85.45 - 7 - 9.20) = 283{,}170 \text{ kip-in.}$$

To calculate ϕ,

Assume the lowest row of prestressing strands is located 2" from the bottom of the girder. The depth to the extreme strands is

$$d_t = H - 2 = 89.68 - 2 = 87.68 \text{ in.}$$

$$\phi = 0.5 + 0.3\left(\frac{d_t}{c} - 1\right) = 0.5 + 0.3\left(\frac{87.68}{34.42} - 1\right) = 0.96$$

$$\phi M_n = 0.96(283{,}170) = 273{,}034 \text{ kip-in.}$$

Effects of Refinement – Strain Compatibility Analysis

A significant amount of additional capacity may be realized for this member by including the top flange of the W83G girder. The top flange is 49" wide and approximately 6" deep. The large area and high strength of the top flange provide a considerable compression contribution to the capacity analysis. The resulting depth to neutral axis, c, is 13.6" and the nominal capacity, Mn, is 321,362 kip-in. The capacity reduction factor is 1.0. Accounting for the top flange results in 14% additional capacity.

Appendix 5-B13 — Strut-and-Tie Model Design Example for Hammerhead Pier

The hammerhead pier shown in Figure 5.1 consists of a rectangular pier and a variable depth cap beam that supports 5 lines of precast, pretensioned girders. The girders sit on neoprene pads, which in turn are supported by concrete bearing blocks having dimensions of 18 x 36 in. The Strength I factored loads acting on the 5 bearing blocks include allowances for the factored self-weight of the cap beam.

The specified concrete compressive strength, f_c', is 4 ksi and the specified yield strength of the reinforcing steel is 60 ksi.

Design the hammerhead pier using the AASHTO LRFD Specifications.

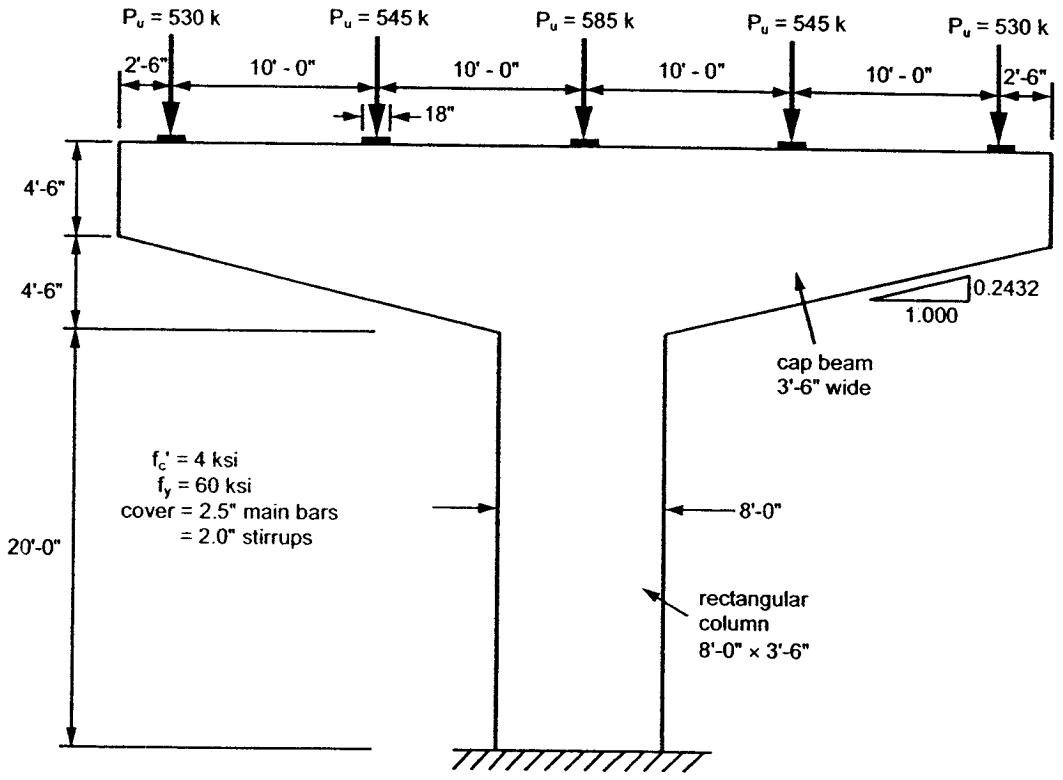

Figure 5.1. Details of hammerhead pier.

The three central loads are located at a distance which is less than twice the member depth from the supporting reaction. Hence the central 20 ft of the hammerhead pier is a D-Region and will be designed using the strut-and-tie method. The outer portions of the hammerhead pier are flexural regions (B-Regions) which can be designed for shear using either the sectional model or the strut-and-tie model. For this example, the strut-and-tie model will be used.

§5.6.3

§5.8.1.1

Step 1 - Draw Idealized Truss Model and Solve for Member Forces

The idealized truss model shown in Figure 5.2 represents the flow of forces in the hammerhead pier. The dashed lines coincide with the centerlines of the compressive struts that represent compressive stresses in different areas of the concrete. The solid lines coincide with the centroids of tension ties, which represent tension forces in different groups of reinforcing bars.

Under the action of the girder loads the ends of the cap beam will bend down causing tension near the top face of the hammerhead pier and compression near the sloping bottom faces. To allow appropriate room for placement of the longitudinal reinforcement, it has been assumed that the centroid of the tension tie near the top face is located 6 in. below the top face. To provide an appropriate space for the concrete compression zone, it has been assumed that the centerline of the bottom compression strut is located 9 in. above the sloping bottom face and is parallel to this face. The compression force in the pier is represented by 3 vertical struts. The central strut carries the 585 kip load, while the outer two struts carry 1075 kips each. Assuming that the pier is subjected to uniform compressive stresses, the width of each outer strut must be:

$$\frac{1075}{585+2\times1075}\times 8 = 3.14 \text{ ft}$$

Hence the centerline of the outer struts will be $0.50\times 3.14 = 1.57$ ft from the outer faces of the pier.

The distributed stirrups in the cap beam are represented by the vertical tension Ties AB, CD, EF, and GH. To solve the statics of the truss model it is convenient to know the lengths of these 4 truss members. As can be seen from Figure 5.1 and Figure 5.2, the vertical distance between the top tie, ACEG, and the bottom strut, BDFH, increases by 0.2432 ft for every additional foot travelled away from the free end of the cantilever. As shown in Figure 5.2, the resulting lengths of the 4 vertical ties are 3.858 ft, 5.074 ft, 6.29 ft., and 8.132 ft.

The member forces shown in Figure 5.2 were determined by the method of joints. Thus at Joint A, the vertical component from Member AD must push the joint upwards with 530 kips. The member must also push the joint to the left with a force of $530\times 5.00/5.074 = 522$ kips. The square root of the sum of the squares of these two components is the force in Member AD, namely a compression of 744 kips. Member AC must have a tension force of 522 kips to balance the horizontal component of Member AD. Considering horizontal and vertical equilibrium for Joints D, C, F, E, H, and G enables all of the member forces to be computed.

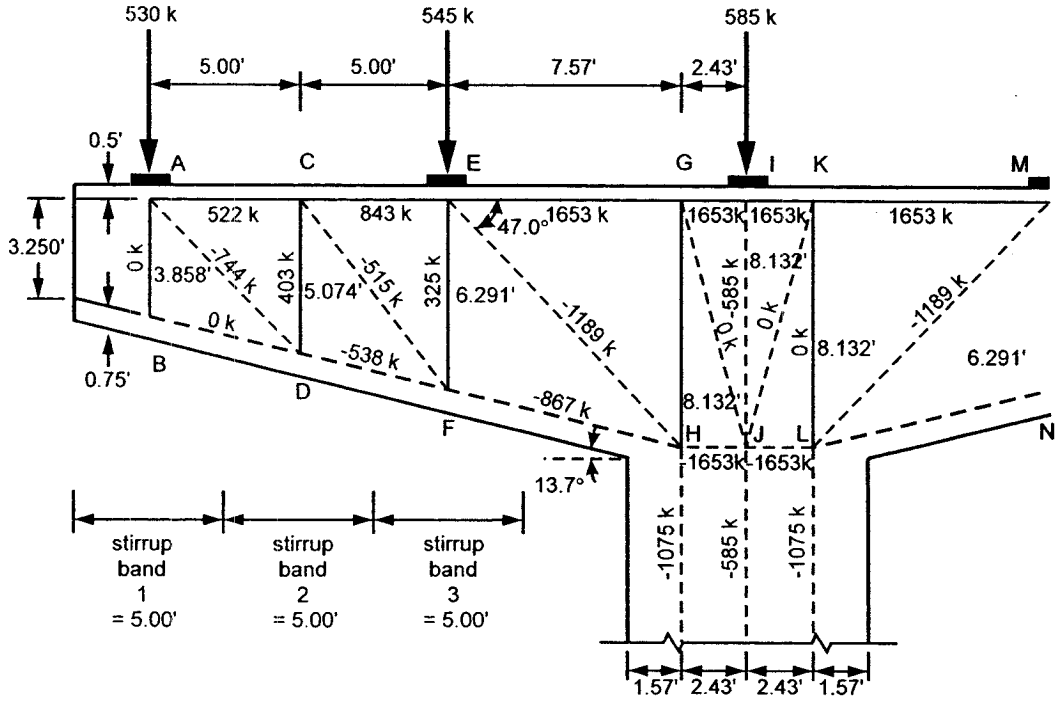

Figure 5.2. Truss idealization.

It is of interest to note that the vertical component of the compression force in the sloping bottom strut, BDFH, carries a significant portion of the vertical shear force. Thus if Member BDFH were horizontal, the forces in Members CD and EF, which represent the tensions in the stirrups, would both be 530 kips, rather than 403 kips and 325 kips, respectively.

Step 2 – Check Size of Bearings

The concrete in the vicinity of Joint E, that is nodal region E, must anchor vertical Tie EF and horizontal Ties EC and EG. The bearing stress on such a region (CTT node) is limited to $0.65\phi f_c'$. Hence the minimum bearing area required to support the 545 kip load is: *§5.6.3.5*

$$\text{bearing area required} = \frac{P_u}{0.65\phi f_c'} = \frac{545}{0.65 \times 0.70 \times 4} = 299 \text{ in.}^2$$

Therefore, the bearing area chosen, 18 x 36 in., is satisfactory (648 in.^{2}).

Step 3 – Design Reinforcement for Main Tension Tie ACEGI

(a) At the highest tension locations, EGI

The required area of tension tie reinforcement, A_{st}, is:

$$A_{st} = \frac{P_u}{\phi f_y} = \frac{1653}{0.9 \times 60} = 30.61 \text{ in.}^2$$ *§5.6.3.4.1*

Use 20 No. 11 bars, $A_{st} = 20 \times 1.56 = 31.2 \text{ in.}^2$

As shown in Figure 5.3, the required 20 No. 11 bars can be provided in 2 layers of 10 bars. If No. 5 stirrups are used the centroid of the 20 No. 11 bars will be about 4.7 in. from the top face. Hence the assumption that the centroid of the tension tie would be 6 in. below the top face was conservative.

(b) At lowest tension location, AC

The required area of tension tie reinforcement is: *§5.6.3.4.1*

$$A_{st} = \frac{P_u}{\phi f_y} = \frac{522}{0.9 \times 60} = 9.67 \text{ in.}^2$$

Therefore, use 8 No. 11 bars, $A_{st} = 8 \times 1.56 = 12.48 \text{ in.}^2$.

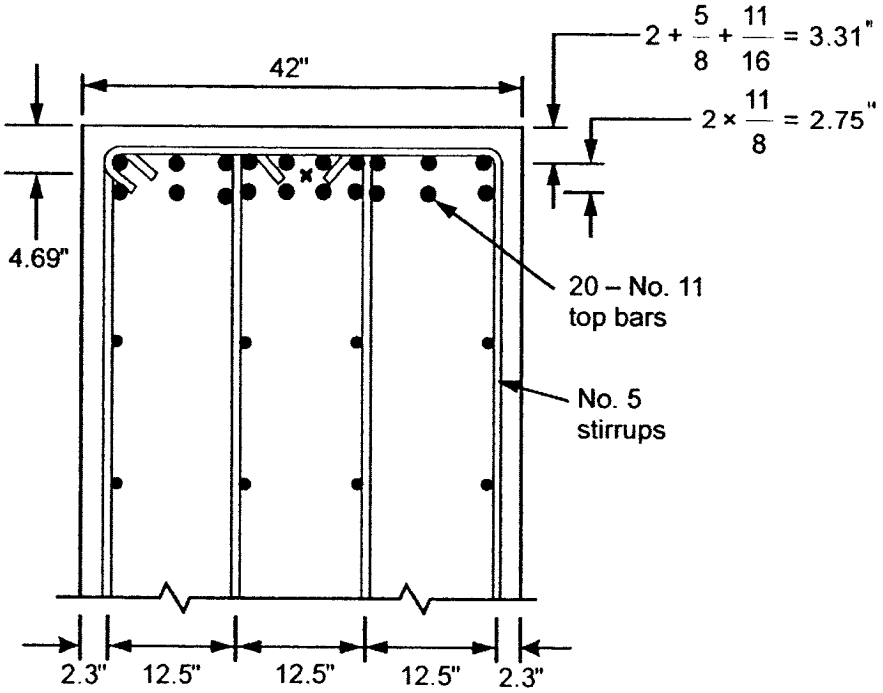

Figure 5.3. Layout of 20 – No. 11 top bars near pier.

(c) Development of bars

The development length for a straight top horizontal No. 11 bar with $f_y = 60$ ksi and $f'_c = 4$ ksi is 82 in. If 90° hooks with at least 2.5 in. of side cover are used the development length is reduced to 19 in. Hence terminate the 10 bars in the lower layer at a location 19 in. beyond point E. Terminate the remaining 10 bars with 90° hooks at a location 27 in. beyond point A. *§5.11.2.1* *§5.11.2.4*

Step 4 – Design Tension Ties Representing Stirrups

Try using No. 5 stirrups with 4 legs (see Figure 5.3).

(a) Stirrup spacing required for Tie CD

Vertical Tie CD has the highest tension. Hence the number of stirrups required in stirrup band 2 (see Figure 5.2), is:

$$n = \frac{P_u}{\phi A_{st} f_y} = \frac{403}{0.9 \times 4 \times 0.31 \times 60} = 6.02$$ *§5.6.3.4.1*

Hence, the required spacing, s, within the 5-ft band is:

$$s \le \frac{60}{6.02} = 9.97 \text{ in.}$$

Try a spacing of 9 in.

In the flexural region between A and E the minimum transverse reinforcement, assuming a stirrup spacing of 9 in., is:

$$A_v = 0.0316\sqrt{f'_c}\,\frac{b_v s}{f_y} = 0.0316 \times \sqrt{4} \times \frac{42 \times 9}{60} = 0.39 \text{ in.}^2$$ *§5.8.2.5*

Since $A_v = 4 \times 0.31 = 1.24 \text{ in.}^2$, an amount greater than minimum has been provided in stirrup band 2 (see Figure 5.2). While No. 5 stirrups with 2 legs could be used in stirrup band 1, which will be governed by the minimum area requirement, it would be more practical to continue the 4-legged No. 5 stirrups at a spacing of 9 in. throughout this region.

(b) Stirrup spacing required for Tie EF

Vertical Tie EF must resist a tension of 325 kips. Hence the number of stirrups required in stirrup band 3 (see Figure 5.2), is:

$$n = \frac{P_u}{\phi A_{st} f_y} = \frac{325}{0.9 \times 4 \times 0.31 \times 60} = 4.85$$ §5.6.3.4.1

Hence, the required spacing, s, within the 5-ft band is:

$$s \le \frac{60}{4.85} = 12.37 \text{ in.}$$

Try a spacing of 12 in.

For crack control in this disturbed region, the ratio of reinforcement area to cross-sectional area shall not be less than 0.003 in both the vertical and horizontal directions. Hence: §5.6.3.6

$$\frac{A_{st}}{bs} \ge 0.003$$

Therefore:

$$s \le \frac{A_{st}}{0.003\, b} = \frac{4 \times 0.31}{0.003 \times 42} = 9.84 \text{ in.}$$

Thus use No. 5 stirrups with 4 legs spaced at 9 in. throughout the length of the beam.

Step 5 – Check Capacity of Bottom Strut BDFH

The highest compressive force in the bottom Strut BDFH is 867 kips in Member FH (see Figure 5.2).

As this strut will be crossed by vertical stirrups, the compressive capacity of this strut may need to be reduced. The area of Tie EF is $(60/9) \times 4 \times 0.31 = 8.27 \text{ in.}^2$. Hence the strain in this stirrup under the 325 kip tension is:

$$\varepsilon_s = \frac{P_u}{A_{st} E_s} = \frac{325}{8.27 \times 29{,}000} = 1.36 \times 10^{-3}$$

As the smallest angle between the strut and the tension tie is 90 - 13.7 = 76.3°, the principal strain, ε_1, can be determined as: §5.6.3.3.3

$$\varepsilon_1 = \varepsilon_s + (\varepsilon_s + 0.002)\cot^2 \alpha_s = 1.36 \times 10^{-3} + (1.36 \times 10^{-3} + 0.002)\cot^2 76.3^0 = 1.56 \times 10^{-3}$$

And, the limiting compressive stress, f_{cu}, in the strut is: §5.6.3.3.3

$$f_{cu} = \frac{f_c'}{0.8 + 170\,\varepsilon_1} \le 0.85 f_c' = \frac{4}{0.8 + 170 \times 1.56 \times 10^{-3}} = 3.76 \text{ ksi} \le 0.85 \times 4 = 3.40 \text{ ksi}$$

The centroid of the strut was assumed to be at 9 in. vertically from the bottom face (see Figure 5.2); hence the thickness of the strut perpendicular to the sloping bottom face is $2 \times 9 \times \cos 13.7^\circ = 17.5$ in. The nominal resistance of the strut is:

$$P_n = f_{cu} A_{cs} = 3.40 \times 42 \times 17.5 = 2499 \text{ kips}$$ §5.6.3.3.1

The factored resistance of the strut is:

$$P_r = \phi P_n = 0.70 \times 2499 = 1749 \text{ kips}$$ §5.6.3.2

As the factored resistance exceeds the 867 kip compression due to factored loads, the strut capacity is adequate.

While the truss geometry could be adjusted by reducing the thickness of the bottom strut and the member forces recalculated, the changes in forces will be rather small, resulting in perhaps the saving of only one bar in the main tension tie. Thus the original conservative assumptions are acceptable.

Step 6 – Check Capacity of Diagonal Struts of AD, CF, and EH

Of the three diagonal struts crossing the web, AD, CF, and EH, Member EH has the highest compression. The details of the member at end E, where it crosses the tension ties, are shown in Figure 5.4.

The strains in Ties CE and EG due to factored loads are shown in Figure 5.3. For determining the strut capacity, the average value of these two strains has been assumed, giving $\varepsilon_s = 1.85 \times 10^{-3}$.

The principal strain, ε_1, can be determined as: §5.6.3.3.3

$$\varepsilon_1 = \varepsilon_s + (\varepsilon_s + 0.002)\cot^2 \alpha_s = 1.85 \times 10^{-3} + (1.85 \times 10^{-3} + 0.002)\cot^2 47.0^0 = 5.20 \times 10^{-3}$$

and the limiting compressive stress, f_{cu}, in the strut is: §5.6.3.3.3

$$f_{cu} = \frac{f_c'}{0.8 + 170\,\varepsilon_1} \le 0.85 f_c' = \frac{4}{0.8 + 170 \times 5.20 \times 10^{-3}} = 2.38 \text{ ksi} \le 0.85 \times 4 = 3.40 \text{ ksi}$$

The cross-sectional dimension of strut EH in the plane of the pier is 19.6 in. (see Figure 5.4), while the effective thickness of the strut at end E could be conservatively taken as 36 in. which is the width of the bearing block. However, the good anchorage conditions provided by the No. 11 bars in the corner of the stirrups enable the effective thickness of the strut to be increased. §5.6.3.3.2

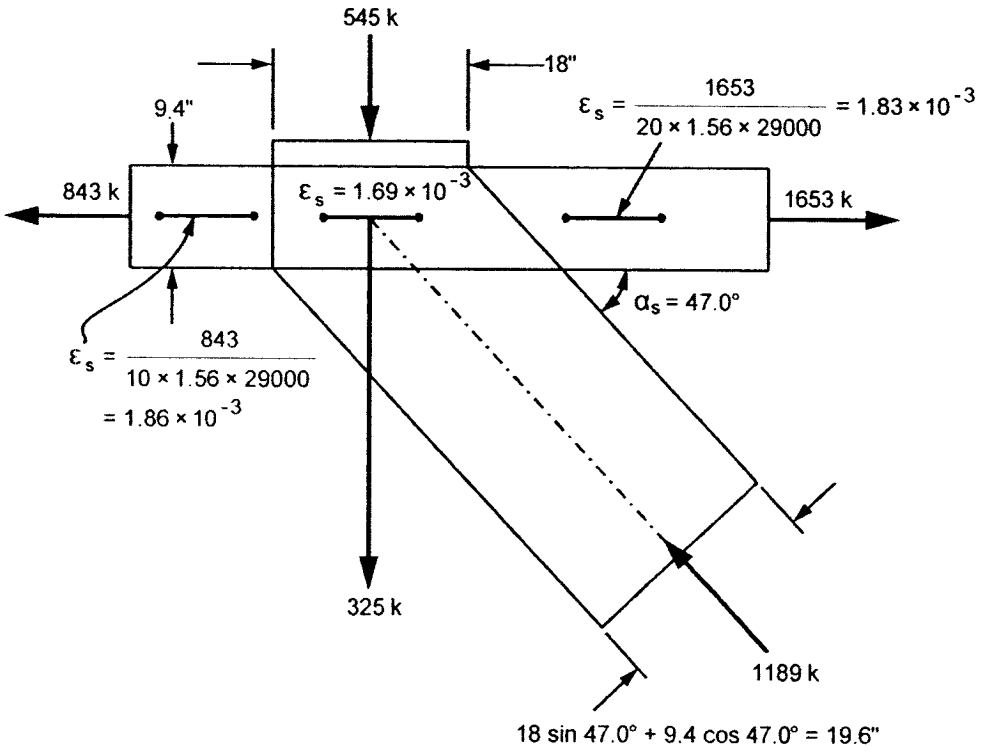

Figure 5.4. Details of Strut EH near Node E.

As can be seen from Figure 5.3, the center-to-center distance of the vertical stirrups across the 42-in. width of the hammerhead pier is 12.5 in. As this distance is less than $2 \times 6d_{ba} = 2 \times 6 \times 1.410 = 16.9$ in., the full 42-in. width of the pier cap is effective. Hence the nominal resistance of the strut is:

$$P_n = f_{cu} A_{cs} = 2.38 \times 42 \times 19.6 = 1959 \text{ kips}$$ §5.6.3.3.1

The factored resistance of the strut is:

$$P_r = \phi P_n = 0.70 \times 1959 = 1357 \text{ kips} \geq 1189 \text{ kips required}$$

Therefore, the strut capacity is adequate.

Step 7 – Provide Crack Control Reinforcement

In Step 4, the stirrup spacing was adjusted to satisfy the crack control requirements for reinforcement in the vertical direction, but crack control reinforcement also must be provided in the horizontal direction. The vertical spacing between these horizontal bars must not exceed 12 in. If this maximum spacing is used, the area of horizontal bars in each layer needs to be: *§5.6.3.6*

$$A_{st} = 0.003bs = 0.003 \times 12 \times 42 = 1.51 \text{ in.}^2$$

Therefore, use 4 No. 6 horizontal bars at 12 in. spacing ($4 \times 0.44 = 1.76$ in.^{2} provided), arranged as shown in Figure 5.5.

Step 8 – Sketch the Required Reinforcement

The resulting reinforcement for the hammerhead pier is shown in Figure 5.5. For clarity the pier reinforcement is not shown.

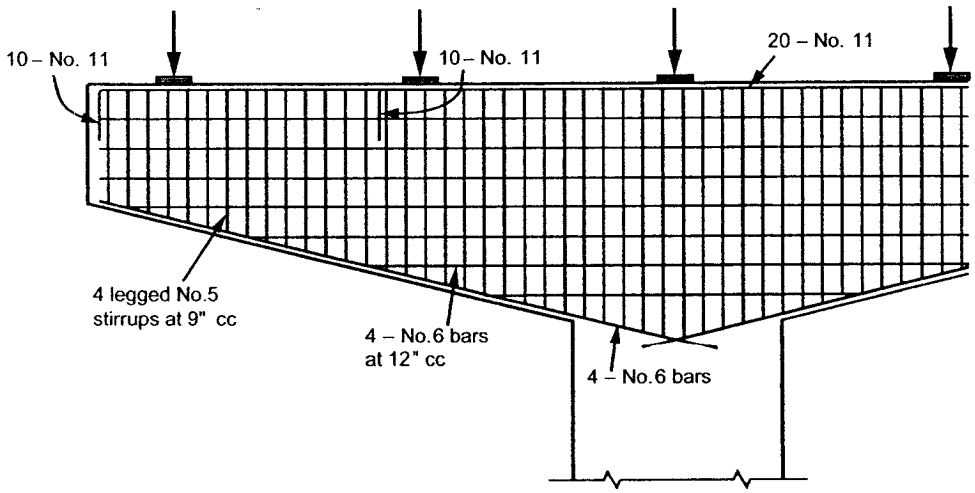

Figure 5.5. Reinforcement details for hammerhead pier.

Define Units:

$ksi \equiv 1000 \cdot psi$ $kip \equiv 1000 \cdot lbf$ $kcf \equiv kip \cdot ft^{-3}$ $klf \equiv kip \cdot ft^{-1}$

Problem Description:

Find the torsion and shear capacity of a reinforced concrete beam of width 37in and height 90in. Clear cover for all sides equals 1.625in. Shear and torsion reinforcement consists of #6 stirrups spaced at 5in. Longitudinal moment steel consists of 4 #18 bars in one row in the top and in the bottom. Factored loads are V_u = 450 kips and T_u = 500 kip-ft.

Concrete Properties:

$f'c := 4 \cdot ksi$

Reinforcement Properties:

Bar Diameters:

$$dia(bar) := \begin{cases} 0.375 \cdot in & \text{if } bar = 3 \\ 0.500 \cdot in & \text{if } bar = 4 \\ 0.625 \cdot in & \text{if } bar = 5 \\ 0.750 \cdot in & \text{if } bar = 6 \\ 0.875in & \text{if } bar = 7 \\ 1.000in & \text{if } bar = 8 \\ 1.128in & \text{if } bar = 9 \\ 1.270in & \text{if } bar = 10 \\ 1.410in & \text{if } bar = 11 \\ 1.693in & \text{if } bar = 14 \\ 2.257in & \text{if } bar = 18 \end{cases}$$

Bar Areas:

$$A_b(bar) := \begin{cases} 0.11 \cdot in^2 & \text{if } bar = 3 \\ 0.20 \cdot in^2 & \text{if } bar = 4 \\ 0.31 \cdot in^2 & \text{if } bar = 5 \\ 0.44 \cdot in^2 & \text{if } bar = 6 \\ 0.60 \cdot in^2 & \text{if } bar = 7 \\ 0.79 \cdot in^2 & \text{if } bar = 8 \\ 1.00 \cdot in^2 & \text{if } bar = 9 \\ 1.27 \cdot in^2 & \text{if } bar = 10 \\ 1.56 \cdot in^2 & \text{if } bar = 11 \\ 2.25 \cdot in^2 & \text{if } bar = 14 \\ 4.00 \cdot in^2 & \text{if } bar = 18 \end{cases}$$

$f_y := 40 \cdot ksi$

$E_s := 29000ksi$ LRFD 5.4.3.2

$E_p := 28500ksi$ LRFD 5.4.4.2 for strands

$bar_{LT} := 18$ Longitudinal - Top

$bar_{LB} := 18$ Longitudinal - Bottom

$bar_T := 6$ Transverse

$s := 5 \cdot in$ Spacing of Transverse Reinforcement

$d_{LT} := dia(bar_{LT})$ $d_{LT} = 2.257\,in$ $A_{LT} := A_b(bar_{LT})$ $A_{LT} = 4\,in^2$

$d_{LB} := dia(bar_{LB})$ $d_{LB} = 2.257\,in$ $A_{LB} := A_b(bar_{LB})$ $A_{LB} = 4\,in^2$

$d_T := dia(bar_T)$ $d_T = 0.75\,in$ $A_T := A_b(bar_T)$ $A_T = 0.44\,in^2$

Beam Section Properties:

$b := 37in$ Width of Beam

$h := 90in$ Height of Beam

$bottomcover := 1.625 \cdot in$

$sidecover := 1.625 \cdot in$

$topcover := 1.625 \cdot in$

Factored Loads:

$V_u := 450 \cdot kip$

$T_u := 500 \cdot kip \cdot ft$

$M_u := 0 \cdot kip \cdot ft$

$N_u := 0 \cdot kip$

Torsional Resistance Investigation Requirement:

Torsion shall be investigated where: LRFD 5.8.2.1

$T_u > 0.25 \cdot \phi \cdot T_{cr}$

$\phi := 0.90$ For Torsion and Shear - Normal weight concrete LRFD 5.5.4.2

$A_{cp} := b \cdot h$ $A_{cp} = 3330\,in^2$

$p_c := (b + h) \cdot 2$ $p_c = 254\,in$

$f_{pc} := 0 \cdot ksi$

$$T_{cr} := 0.125 \cdot \sqrt{\frac{f'c}{ksi}} \cdot \frac{\left(\frac{A_{cp}}{in^2}\right)^2}{\left(\frac{p_c}{in}\right)} \cdot \sqrt{1 + \frac{\frac{f_{pc}}{ksi}}{0.125 \cdot \sqrt{\frac{f'c}{ksi}}}} \cdot kip \cdot in \qquad T_{cr} = 10914\,kip \cdot in$$

$T_{cr} = 909.5\,kip \cdot ft$

$0.25 \cdot \phi \cdot T_{cr} = 204.6\,kip \cdot ft$

$T_u > 0.25 \cdot \phi \cdot T_{cr} = 1$ Torsion shall be investigated.

Since torsion shall be investigated, transverse reinforcement is required as per LRFD 5.8.2.4. The minimum transverse reinforcement requirement of LRFD 5.8.2.5 shall be met.

Minimum Transverse Reinforcement: LRFD 5.8.2.5

$b_v := b$ $b_v = 37\,in$ LRFD 5.8.2.9

$A_v := 2A_T$ $A_v = 0.88\,in^2$ LRFD 5.8.3.3

$A_{vmin} := 0.0316 \cdot \sqrt{\frac{f'c}{ksi}} \cdot ksi \cdot \frac{b_v \cdot s}{f_y}$ $A_{vmin} = 0.29\,in^2$

$A_v \geq A_{vmin} = 1$ OK

Equivalent Factored Shear Force: LRFD 5.8.2.1

$$p_h := 2 \cdot \left[\left[b - 2 \cdot \left(sidecover + \frac{d_T}{2} \right) \right] + \left(h - topcover - bottomcover - d_T \right) \right]$$

$p_h = 238\,in$

$$A_{oh} := \left[b - 2 \cdot \left(sidecover + \frac{d_T}{2} \right) \right] \cdot \left(h - topcover - bottomcover - d_T \right)$$

$A_{oh} = 2838\,in^2$

$A_o := 0.85 \cdot A_{oh}$ $A_o = 2412.3\,in^2$ LRFD C5.8.2.1

Equivalent Factored Shear Force:

$$V_{ust} := \sqrt{V_u{}^2 + \left(\frac{0.9 \cdot p_h \cdot T_u}{2 \cdot A_o} \right)^2}$$ $V_{ust} = 522.9\,kip$ LRFD 5.8.2.1-6

V_{ust} shall be used to determine β and θ.

Determination of β and θ: LRFD 5.8.3.4

$d_e := h - bottomcover - d_T - \frac{d_{LB}}{2}$ $d_e = 86.5\,in$ LRFD 5.8.2.9

$d_v := \max(0.9 \cdot d_e, 0.72 \cdot h)$ $d_v = 77.85\,in$ LRFD 5.8.2.9

$V_p := 0 \cdot kip$ No Prestress Strands

$A_{ps} := 0 \cdot in^2$ No Prestress Strands

$A_s := 4 \cdot A_{LB}$ $A_s = 16\,in^2$ For 4 #18 bars

$f_{po} := 0 \cdot ksi$

$\theta := 30.5 \cdot deg$ Assume to begin iterations (then vary until convergence below)

$$\varepsilon_x := \frac{\left(\frac{|M_u|}{d_v} + 0.5 \cdot N_u + 0.5 \cdot |V_{ust} - V_p| \cdot \cot(\theta) - A_{ps} \cdot f_{po}\right)}{2 \cdot (E_s \cdot A_s + E_p \cdot A_{ps})}$$ LRFD 5.8.3.4.2-1

$\varepsilon_x \cdot 1000 = 0.478$

$v_u := \frac{|V_{ust} - \phi \cdot V_p|}{\phi \cdot b_v \cdot d_v}$ $v_u = 0.202\,ksi$ LRFD 5.8.2.9-1

$\frac{v_u}{f'c} = 0.05$

From Table 5.8.3.4.2-1, Find β and θ

$\theta := 30.5 \cdot deg$ Value is close to original guess. OK.

$\beta := 2.59$

Torsional Resistance:

The factored Torsional Resistance shall be: LRFD 5.8.2.1

$T_r = \phi \cdot T_n$

$A_t := A_T$ $A_t = 0.44\,in^2$ LRFD 5.8.3.6.2

$T_n := \frac{2 \cdot A_o \cdot A_t \cdot f_y \cdot \cot(\theta)}{s}$ $T_n = 28831\,kip \cdot in$ LRFD 5.8.3.6.2-1

$T_n = 2403\,kip \cdot ft$

$T_r := \phi \cdot T_n$ $T_r = 25948\,kip \cdot in$ LRFD 5.8.2.1

$T_r = 2162\,kip \cdot ft$

$T_r \geq T_u = 1$ OK

Shear Resistance:

The factored Shear Resistance shall be:

$V_r = \phi \cdot V_n$ LRFD 5.8.2.1

$V_c := 0.0316 \cdot \beta \cdot \sqrt{\frac{f'c}{ksi}} \cdot b_v \cdot d_v \cdot ksi$ $V_c = 471.5\,kip$ LRFD 5.8.3.3

$\alpha := 90 \cdot deg$

$V_s := \frac{A_v \cdot f_y \cdot d_v \cdot (\cot(\theta) + \cot(\alpha)) \cdot \sin(\alpha)}{s}$ $V_s = 930.4\,kip$ LRFD 5.8.3.3

$V_n := \min\left(V_c + V_s + V_p, 0.25 \cdot f'c \cdot b_v \cdot d_v + V_p\right)$ $V_n = 1402\,kip$

$V_r := \phi \cdot V_n$ $V_r = 1262\,kip$

$V_r \geq V_u = 1$ OK

Check for Longitudinal Reinforcement: LRFD 5.8.3.6.3

$f_{ps} := 0 \cdot ksi$

$X1 := A_s \cdot f_y + A_{ps} \cdot f_{ps}$ $X1 = 640\,kip$

For a Solid Section:

$$X2 := \frac{|M_u|}{\phi \cdot d_v} + \frac{0.5 \cdot N_u}{\phi} + \cot(\theta) \cdot \sqrt{\left(\left|\frac{V_u}{\phi} - V_p\right| - 0.5 \cdot V_s\right)^2 + \left(\frac{0.45 \cdot p_h \cdot T_u}{2 \cdot A_o \cdot \phi}\right)^2}$$

$X2 = 258\,kip$

$X1 \geq X2 = 1$ OK

Maximum Spacing of Transverse Reinforcement: LRFD 5.8.2.7

$v_u = 0.202\,ksi$

$0.125 \cdot f'c = 0.5\,ksi$

$s_{max} := if\left(v_u < 0.125 \cdot f'c, \min\left(0.8 \cdot d_v, 24in\right), \min\left(0.4 \cdot d_v, 12in\right)\right)$

$s_{max} = 24\,in$

$if\left(s \leq s_{max}, "OK", "NG"\right) = "OK"$

Appendix 5-B15 Sound Wall Design - Type D-2k

Precast Panel on Shaft

This design is based upon:

- AASHTO Guide Specifications for Structural Design of Sound Barriers - 1989 (including 2002 interim)
- AASHTO Standard Specifications for Highway Bridges 17th Ed. - 2002
- USS Steel Sheet Piling Design Manual - July 1984
- WSDOT Bridge Design Manual
- Caltrans Trenching and Shoring Manual - June 1995

This design doesn't account for the loads of a combined retaining wall / noisewall. A maximum of 2 ft of retained fill above the final ground line is suggested.

MathCAD file written by Brian Aldrich, July 15, 2004.

Define Units: $ksi \equiv 1000 \cdot psi$ $kip \equiv 1000 \cdot lbf$ $kcf \equiv kip \cdot ft^{-3}$ $klf \equiv kip \cdot ft^{-1}$

$plf \equiv lbf \cdot ft^{-1}$ $psf \equiv lbf \cdot ft^{-2}$ $pcf \equiv lbf \cdot ft^{-3}$

Concrete Properties:

$w_c := 160 \cdot pcf$ BDM 4.1.1

$f'c := 4000 \cdot psi$

$E_c := \left(\frac{w_c}{pcf}\right)^{1.5} \cdot 33 \cdot \sqrt{\frac{f'c}{psi}} \cdot psi$ $E_c = 4.224 \times 10^6\, psi$ Std Spec. 8.7.1

$\beta_1 := if\left(f'c \le 4000 \cdot psi, 0.85, \max\left(0.85 - \frac{f'c - 4000 \cdot psi}{1000 \cdot psi} \cdot 0.05, 0.65\right)\right)$ Std Spec. 8.16.2.7

$\beta_1 = 0.85$

$f_r := 7.5 \cdot \sqrt{\frac{f'c}{psi}} \cdot psi$ $f_r = 474.3\, psi$ Std Spec. 8.15.2.1.1

Reinforcement Properties:

Diameters: $dia(bar) := \begin{cases} 0.375\cdot in & \text{if } bar = 3 \\ 0.500\cdot in & \text{if } bar = 4 \\ 0.625\cdot in & \text{if } bar = 5 \\ 0.750\cdot in & \text{if } bar = 6 \\ 0.875\cdot in & \text{if } bar = 7 \\ 1.000\cdot in & \text{if } bar = 8 \\ 1.128\cdot in & \text{if } bar = 9 \\ 1.270\cdot in & \text{if } bar = 10 \\ 1.410\cdot in & \text{if } bar = 11 \\ 1.693\cdot in & \text{if } bar = 14 \\ 2.257\cdot in & \text{if } bar = 18 \end{cases}$

Areas: $A_b(bar) := \begin{cases} 0.11\cdot in^2 & \text{if } bar = 3 \\ 0.20\cdot in^2 & \text{if } bar = 4 \\ 0.31\cdot in^2 & \text{if } bar = 5 \\ 0.44\cdot in^2 & \text{if } bar = 6 \\ 0.60\cdot in^2 & \text{if } bar = 7 \\ 0.79\cdot in^2 & \text{if } bar = 8 \\ 1.00\cdot in^2 & \text{if } bar = 9 \\ 1.27\cdot in^2 & \text{if } bar = 10 \\ 1.56\cdot in^2 & \text{if } bar = 11 \\ 2.25\cdot in^2 & \text{if } bar = 14 \\ 4.00\cdot in^2 & \text{if } bar = 18 \end{cases}$

$f_y := 60000\cdot psi$

$E_s := 29000000\cdot psi$ Std. Spec. 8.7.2

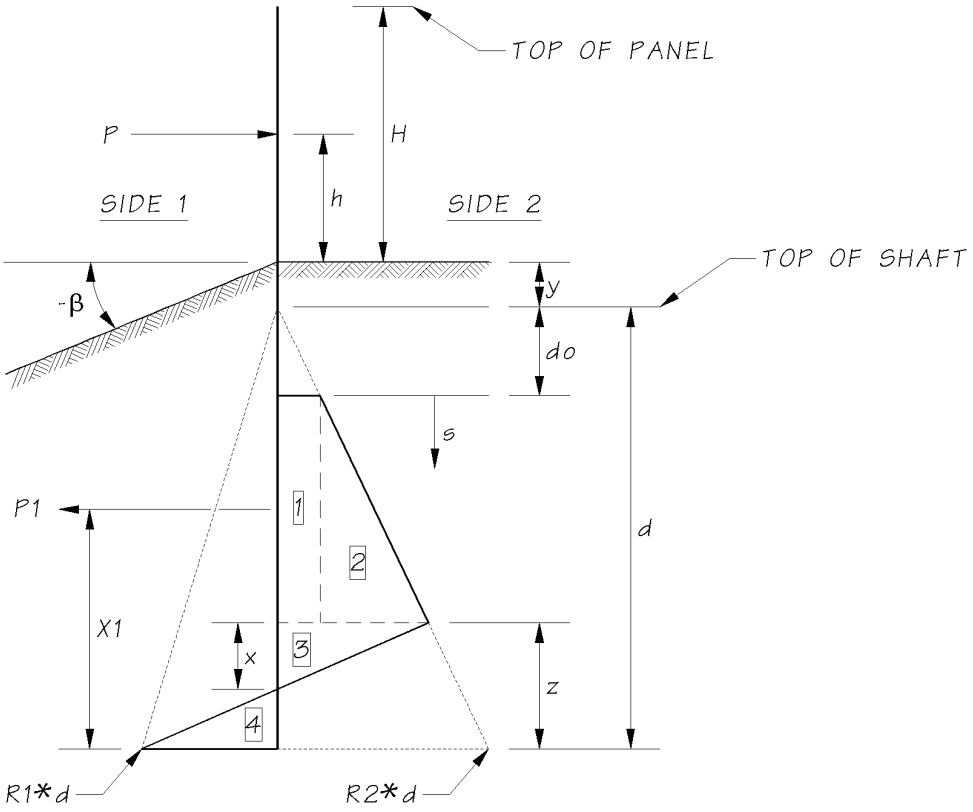

FIGURE A: SHAFT LATERAL SOIL PRESSURES

Wall Geometry:

Wall Height:	$H := 24 \cdot ft$	H should be <= 28 ft
Half of Wall Height:	$h := H \cdot 0.5$	$h = 12\,ft$
Shaft Diameter:	$b := 2.50 \cdot ft$	
Shaft Spacing:	$L := 12 \cdot ft$	

Wind Load (Guide Spec. Table 1-2.1.2.C):

$WindExp := "B2"$ Wind Exposure B1 or B2 - Provided by the Region

$WindVel := 90 \cdot mph$ Wind Velocity 80 or 90 mph - Provided by the Region

$$WindPressure(WindExp, WindVel) := \begin{cases} 12 \cdot psf & \text{if } (WindExp = "B1" \wedge WindVel = 80 \cdot mph) \\ 16 \cdot psf & \text{if } (WindExp = "B1" \wedge WindVel = 90 \cdot mph) \\ 20 \cdot psf & \text{if } (WindExp = "B2" \wedge WindVel = 80 \cdot mph) \\ 25 \cdot psf & \text{if } (WindExp = "B2" \wedge WindVel = 90 \cdot mph) \\ "error" & \text{otherwise} \end{cases}$$

Wind Pressure: $P_w := WindPressure(WindExp, WindVel)$ $P_w = 25\,psf$

Seismic Load (Guide Spec. 1-2.1.3):

Acceleration Coefficient	$A := 0.35$	BDM 4.4-A2
DL Coefficient, Wall	$f := 0.75$	Not on bridge condition
Panel Plan Area:	$A_{pp} := 4in \cdot L + 13in \cdot 16in$	$A_{pp} = 5.44\,ft^2$
Seismic Force EQD (perp. to wall surface):	$EQD := \max(A \cdot f, 0.1) \cdot \left(\frac{A_{pp} \cdot w_c}{L}\right)$	$EQD = 19.1\,psf$

Factored Loads (Guide Spec. 1-2.2.2):

$Wind := 1.3 \cdot P_w \cdot 2 \cdot h \cdot L$	$Wind = 9360\,lbf$	
$EQ := 1.3 \cdot EQD \cdot 2 \cdot h \cdot L$	$EQ = 7134\,lbf$	
$P := \max(Wind, EQ)$	$P = 9360\,lbf$	Factored Design load acting at mid height of wall "h".

Soil Parameters:

Soil Friction Angle:	$\phi := 38 \cdot deg$		Provided by the Region
Soil Unit Weight:	$\gamma := 125 \cdot pcf$		Provided by the Region
Top Soil Depth:	$y := 2.0 \cdot ft$		From top of shaft to ground line
Ineffective Shaft Depth:	$d_o := 0.5 \cdot ft$		Depth of neglected soil at shaft
Isolation Factor for Shafts:	$Iso := \min\left(3.0, 0.08 \cdot \frac{\phi}{deg}, \frac{L}{b}\right)$ $Iso = 3.00$		Factor used to amplify the passive resistance based on soil wedge behavior resulting from shaft spacing - Caltrans pg 10-2.
Factor of Safety:	$FS := 1.00$		
Angle of Wall Friction:	$\delta := \frac{2}{3} \cdot \phi$	$\delta = 25.333\,deg$	Guide Spec. App. C pg. 33
Correction Factor for Horizontal Component of Earth Pressure:	$HC := \cos(\delta)$	$HC = 0.904$	
Foundation Strength Reduction Factors:	$\phi_{fa} := 1.00$	(Active)	Guide Spec. 1-2.2.3
	$\phi_{fp} := 0.90$	(Passive)	Guide Spec. 1-2.2.3

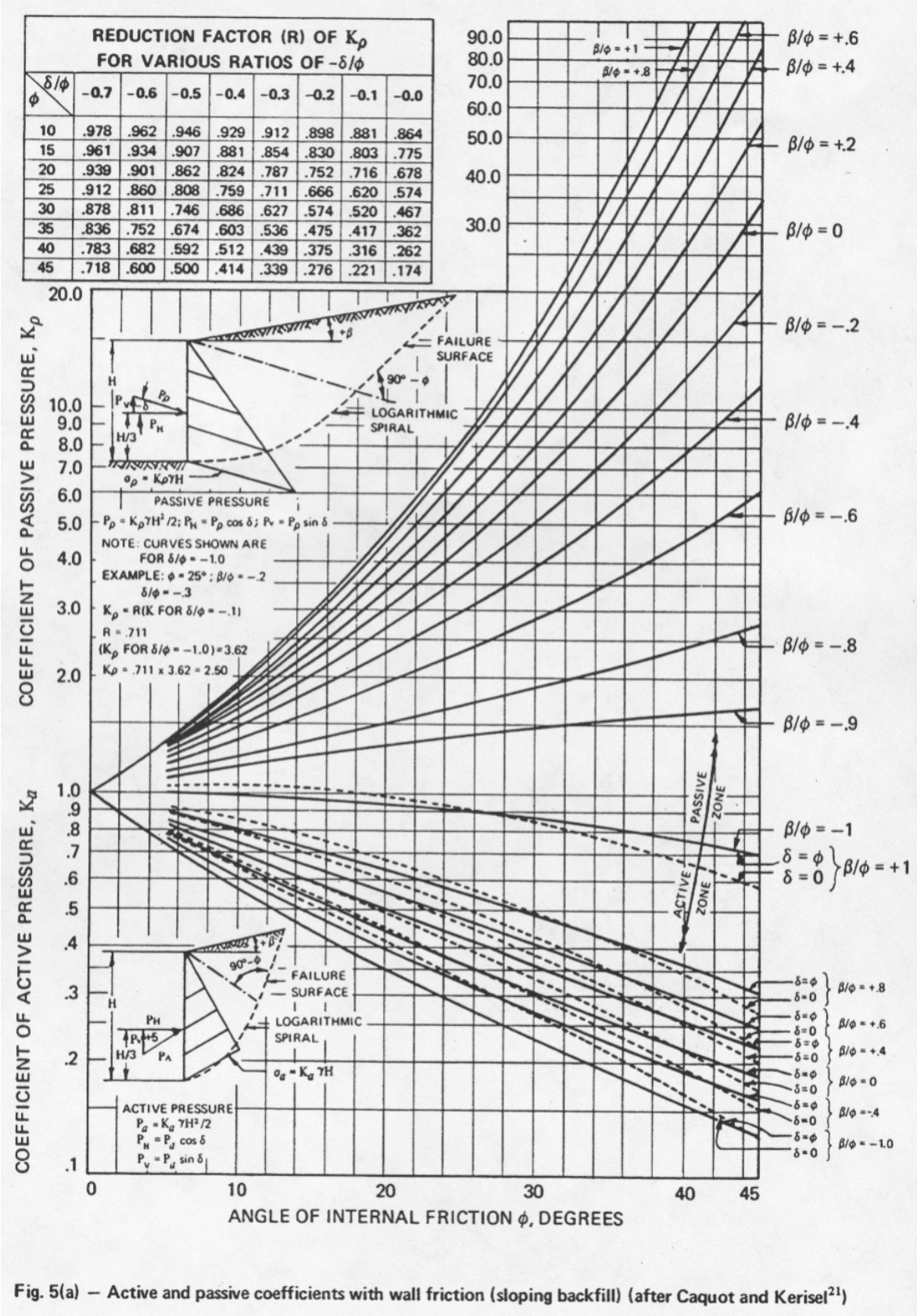

Fig. 5(a) — Active and passive coefficients with wall friction (sloping backfill) (after Caquot and Kerisel[21])

Side 1:

Backfill Slope Angle: $\beta_{s1} := -\text{atan}\left(\frac{1}{2}\right)$ $\beta_{s1} = -26.5651\,\text{deg}$ $\frac{\beta_{s1}}{\phi} = -0.70$

Using the USS Steel Sheet Piling Design Manual, Figure 5(a):

For ϕ = 38 deg and β_s = 0 deg:
K_a = 0.234, K_p = 14.20, R_p = 0.773

For ϕ = 32 deg and β_s = 0 deg:
K_a = 0.290, K_p = 7.85, R_p = 0.8366

For ϕ = 38 deg and β_s = -26.5651 deg:
K_a = 0.190, K_p = 3.060, R_p = 0.773

For ϕ = 32 deg and β_s = -26.5651 deg:
K_a = 0.230, K_p = 1.82, R_p = 0.8366

Active Earth Pressure Coeff: $K_{a1} := 0.190$ USS Fig. 5(a)

Passive Earth Pressure Coeff: $K_{p1} := 3.060$ USS Fig. 5(a)

Reduction for Kp: $R_{p1} := 0.773$ USS Fig. 5(a)

Active Pressure:

$\phi P_{a1} := K_{a1} \cdot \gamma \cdot HC \cdot \phi_{fa}$ $\phi P_{a1} = 21\,\frac{\text{psf}}{\text{ft}}$

Passive Pressure:

$\phi P_{p1} := \frac{K_{p1} \cdot R_{p1} \cdot \gamma \cdot HC \cdot Iso \cdot \phi_{fp}}{FS}$ $\phi P_{p1} = 722\,\frac{\text{psf}}{\text{ft}}$

Side 2:

Backfill Slope Angle: $\beta_{s2} := -\text{atan}\left(\frac{1}{2}\right)$ $\beta_{s2} = -26.5651\,\text{deg}$ $\frac{\beta_{s2}}{\phi} = -0.70$

Active Earth Pressure Coeff: $K_{a2} := 0.190$ USS Fig. 5(a)

Passive Earth Pressure Coeff: $K_{p2} := 3.060$ USS Fig. 5(a)

Reduction for Kp: $R_{p2} := 0.773$ USS Fig. 5(a)

Active Pressure:

$\phi P_{a2} := K_{a2} \cdot \gamma \cdot HC \cdot \phi_{fa}$ $\phi P_{a2} = 21\,\frac{\text{psf}}{\text{ft}}$

Passive Pressure:

$\phi P_{p2} := \frac{K_{p2} \cdot R_{p2} \cdot \gamma \cdot HC \cdot Iso \cdot \phi_{fp}}{FS}$ $\phi P_{p2} = 722\,\frac{\text{psf}}{\text{ft}}$

Allowable Net Lateral Soil Pressure:

$R_1 := \phi P_{p1} - \phi P_{a2}$ $R_1 = 700\,\frac{\text{psf}}{\text{ft}}$ Side 1

$R_2 := \phi P_{p2} - \phi P_{a1}$ $R_2 = 700\,\frac{\text{psf}}{\text{ft}}$ Side 2

Depth of Shaft Required:

The function "ShaftD" finds the required shaft depth "d" by increasing the shaft depth until the sum of the moments about the base of the shaft "Msum" is nearly zero. See Figure A for a definition of terms.

$$\text{ShaftD}(d_o, P, R_1, R_2, b, h, y) :=$$

$d \leftarrow 0 \cdot ft$

$M_{sum} \leftarrow 100 \cdot lbf \cdot ft$

while $M_{sum} \geq 0.001 \cdot lbf \cdot ft$

$d \leftarrow d + 0.00001 \cdot ft$

$z \leftarrow \frac{2}{d \cdot (R_1 + R_2)} \cdot \left(\frac{R_2 \cdot d^2}{2} - \frac{R_2 \cdot {d_o}^2}{2} - \frac{P}{b} \right)$

$x \leftarrow \frac{R_2 \cdot z \cdot (d - z)}{R_1 \cdot d + R_2 \cdot (d - z)}$

$P1 \leftarrow (R_2 \cdot d_o) \cdot (d - d_o - z)$

$P2 \leftarrow R_2 \cdot (d - d_o - z)^2 \cdot \frac{1}{2}$

$P3 \leftarrow R_2 \cdot (d - z) \cdot x \cdot \frac{1}{2}$

$P4 \leftarrow R_1 \cdot d \cdot (z - x) \cdot \frac{1}{2}$

$X1 \leftarrow \frac{z + d - d_o}{2}$

$X2 \leftarrow \frac{2 \cdot z + d - d_o}{3}$

$X3 \leftarrow z - \frac{x}{3}$

$X4 \leftarrow \frac{1}{3} \cdot (z - x)$

$M_{sum} \leftarrow P \cdot (h + y + d) + b \cdot (-P1 \cdot X1 - P2 \cdot X2 - P3 \cdot X3 + P4 \cdot X4)$

d

Check for 2 load cases. Case 1 has load P acting as shown on Figure A. Case 2 has load P acting in the opposite direction.

Case 1:

$d_{c1} := \text{ShaftD}(d_o, P, R_1, R_2, b, h, y)$ $d_{c1} = 11.18\,\text{ft}$

$z_{c1} := \frac{2}{d_{c1}\cdot(R_1 + R_2)}\cdot\left(\frac{R_2\cdot d_{c1}^{\,2}}{2} - \frac{R_2\cdot d_o^{\,2}}{2} - \frac{P}{b}\right)$ $z_{c1} = 5.102\,\text{ft}$

$x_{c1} := \frac{R_2\cdot z_{c1}\cdot(d_{c1} - z_{c1})}{R_1\cdot d_{c1} + R_2\cdot(d_{c1} - z_{c1})}$ $x_{c1} = 1.797\,\text{ft}$

$P4_{c1} := R_1\cdot d_{c1}\cdot(z_{c1} - x_{c1})\cdot\frac{1}{2}$ $P4_{c1} = 12935\,\text{ft}^2\,\frac{\text{psf}}{\text{ft}}$

Case 2:

$d_{c2} := \text{ShaftD}(d_o, P, R_2, R_1, b, h, y)$ $d_{c2} = 11.18\,\text{ft}$

$z_{c2} := \frac{2}{d_{c2}\cdot(R_1 + R_2)}\cdot\left(\frac{R_1\cdot d_{c2}^{\,2}}{2} - \frac{R_1\cdot d_o^{\,2}}{2} - \frac{P}{b}\right)$ $z_{c2} = 5.102\,\text{ft}$

$x_{c2} := \frac{R_1\cdot z_{c2}\cdot(d_{c2} - z_{c2})}{R_2\cdot d_{c2} + R_1\cdot(d_{c2} - z_{c2})}$ $x_{c2} = 1.797\,\text{ft}$

$P4_{c2} := R_2\cdot d_{c2}\cdot(z_{c2} - x_{c2})\cdot\frac{1}{2}$ $P4_{c2} = 12935\,\text{ft}^2\,\frac{\text{psf}}{\text{ft}}$

Determine Shaft Lateral Pressures and Moment Arms for Controlling Case:

$d := \max(d_{c1}, d_{c2})$ $d = 11.18\,\text{ft}$

$R_a := \text{if}(d_{c2} \geq d_{c1}, R_1, R_2)$ $R_a = 700\,\frac{\text{psf}}{\text{ft}}$ $R_b := \text{if}(d_{c2} \geq d_{c1}, R_2, R_1)$ $R_b = 700\,\frac{\text{psf}}{\text{ft}}$

$z := \frac{2}{d\cdot(R_a + R_b)}\cdot\left(\frac{R_a\cdot d^2}{2} - \frac{R_a\cdot d_o^{\,2}}{2} - \frac{P}{b}\right)$ $z = 5.102\,\text{ft}$ $x := \frac{R_a\cdot z\cdot(d - z)}{R_b\cdot d + R_a\cdot(d - z)}$ $x = 1.797\,\text{ft}$

$P1 := (R_a\cdot d_o)\cdot(d - d_o - z)$ $P1 = 1953\,\frac{\text{lbf}}{\text{ft}}$ $X1 := \frac{z + d - d_o}{2}$ $X1 = 7.892\,\text{ft}$

$P2 := R_a\cdot(d - d_o - z)^2\cdot\frac{1}{2}$ $P2 = 10901\,\frac{\text{lbf}}{\text{ft}}$ $X2 := \frac{2\cdot z + d - d_o}{3}$ $X2 = 6.962\,\text{ft}$

$P3 := R_a\cdot(d - z)\cdot x\cdot\frac{1}{2}$ $P3 = 3825\,\frac{\text{lbf}}{\text{ft}}$ $X3 := z - \frac{x}{3}$ $X3 = 4.503\,\text{ft}$

$P4 := R_b\cdot d\cdot(z - x)\cdot\frac{1}{2}$ $P4 = 12935\,\frac{\text{lbf}}{\text{ft}}$ $X4 := \frac{1}{3}\cdot(z - x)$ $X4 = 1.102\,\text{ft}$

$M_{sum} := P\cdot(h + y + d) + b\cdot(-P1\cdot X1 - P2\cdot X2 - P3\cdot X3 + P4\cdot X4)$ $M_{sum} = -0.13163\,\text{lbf}\cdot\text{ft}$

Shaft Design Values:

The Maximum Shear will occur at the bolts or at the top of area 4 on Figure A:

$V_{shaft} := \max(P, P4_{c1} \cdot b, P4_{c2} \cdot b)$ $V_{shaft} = 32339\,lbf$

The Maximum Moment in the shaft will occur where the shear = 0.

Assume that the point where shear = 0 occurs in areas 1 and 2 on Figure A.

Check for Case 1:

$s_{c1} := -d_o + \sqrt{d_o^2 + \frac{2 \cdot P}{R_2 \cdot b}}$ $s_{c1} = 2.808\,ft$

$M_{shaftc1} := P \cdot (h + y + d_o + s_{c1}) - R_2 \cdot d_o \cdot b \cdot s_{c1}^2 \cdot \frac{1}{2} - R_2 \cdot b \cdot s_{c1}^3 \cdot \frac{1}{6}$ $M_{shaftc1} = 152094\,lbf \cdot ft$

Check that the point where shear = 0 occurs in areas 1 and 2 on Figure A:

$Check1 := if[s_{c1} \le (d_{c1} - d_o - z_{c1}), "OK", "NG"]$ $Check1 = "OK"$

Check for Case 2:

$s_{c2} := -d_o + \sqrt{d_o^2 + \frac{2 \cdot P}{R_1 \cdot b}}$ $s_{c2} = 2.808\,ft$

$M_{shaftc2} := P \cdot (h + y + d_o + s_{c2}) - R_1 \cdot d_o \cdot b \cdot s_{c2}^2 \cdot \frac{1}{2} - R_1 \cdot b \cdot s_{c2}^3 \cdot \frac{1}{6}$ $M_{shaftc2} = 152094\,lbf \cdot ft$

Check that the point where shear = 0 occurs in areas 1 and 2 on Figure A:

$Check2 := if[s_{c2} \le (d_{c2} - d_o - z_{c2}), "OK", "NG"]$ $Check2 = "OK"$

$M_{shaft} := \max(M_{shaftc1}, M_{shaftc2})$ $M_{shaft} = 152094\,lbf \cdot ft$

Anchor Bolt and Panel Post Design Values:

$V_{bolt} := P$ $V_{bolt} = 9360\,lbf$

$M_{bolt} := P \cdot (h + y)$ $M_{bolt} = 131040\,lbf \cdot ft$

Panel Design Value (about a vertical axis):

Find Design Moment for a 1 ft wide strip of wall (between panel posts) for the panel flexure design

$w_{panel} := \max[P_w, \max(A \cdot f, 0.1) \cdot (4in \cdot w_c)]$ $w_{panel} = 25.0\,psf$

$M_{panel} := 1.3 \frac{w_{panel} \cdot L^2}{8}$ $M_{panel} = 585 \frac{lbf \cdot ft}{ft}$

Panel Post Resistance:

$Cl_{pa} := 1.0in$ Clear Cover to Ties

$h_{pa} := 17in$ Depth of Post

$b_{pa} := 10in$ Width of Post

$bar_A := 10$ Per Design Requirements

Check Flexural Resistance (Std. Spec. 8.16.3):

$\phi_f := 0.90$ Std. Spec. 8.16.1.2.2

$d_{pa} := h_{pa} - Cl_{pa} - dia(3) - \frac{dia(bar_A)}{2}$ $d_{pa} = 14.99in$ Effective depth

$A_s := 2 \cdot A_b(bar_A)$ $A_s = 2.54in^2$

$a := \frac{A_s \cdot f_y}{0.85 \cdot f'c \cdot b_{pa}}$ $a = 4.482in$

$M_n := A_s \cdot f_y \cdot \left(d_{pa} - \frac{a}{2} \right)$ $M_n = 161910lbf \cdot ft$

$\phi_f \cdot M_n = 145719lbf \cdot ft$

$Check3 := if(\phi_f \cdot M_n \geq M_{bolt}, "OK", "NG")$ $Check3 = "OK"$

Check Maximum Reinforcement (Std. Spec. 8.16.3.1):

$\rho_b := \frac{0.85 \cdot \beta_1 \cdot f'c}{f_y} \cdot \left(\frac{87000 \cdot psi}{87000 \cdot psi + f_y} \right)$ $\rho_b = 0.029$

$\rho := \frac{A_s}{b_{pa} \cdot d_{pa}}$ $\rho = 0.01694$

$Check4 := if(\rho \leq 0.75 \cdot \rho_b, "OK", "NG")$ $Check4 = "OK"$

Check Minimum Reinforcement (Std. Spec. 8.17.1.1):

$S_a := \frac{b_{pa} \cdot h_{pa}^2}{6}$ $S_a = 481.7in^3$

$M_{cra} := f_r \cdot S_a$ $M_{cra} = 19040lbf \cdot ft$

$Check5 := if(\phi_f \cdot M_n \geq \min(1.2 \cdot M_{cra}, 1.33 \cdot M_{bolt}), "OK", "NG")$ $Check5 = "OK"$

Check Shear (Std. Spec. 8.16.6) - Note: Shear Capacity of stirrups neglected:

$\phi_v := 0.85$ Std. Spec. 8.16.1.2.2

$V_{ca} := 2 \cdot \sqrt{\frac{f'c}{psi}} \cdot psi \cdot b_{pa} \cdot d_{pa}$ $V_{ca} = 18961\,lbf$

$Check6 := if\left(\phi_v \cdot V_{ca} \geq V_{bolt}, "OK", "NG"\right)$ $Check6 = "OK"$

Panel Post Base Resistance:

$b_{pb} := 9in$ Width of Panel Post Base $bar_B := 9$ Per Design Requirements

$h_{pb} := 17.5in$ Depth of Panel Post Base

Check Flexural Resistance (Std. Spec. 8.16.3):

$\phi_f = 0.9$ Std. Spec. 8.16.1.2.2

$d_{pb} := h_{pb} - 0.75in$ $d_{pb} = 16.75\,in$ Effective depth

$A_s := 2 \cdot A_b\left(bar_B\right)$ $A_s = 2\,in^2$

$a := \frac{A_s \cdot f_y}{0.85 \cdot f'c \cdot b_{pb}}$ $a = 3.922\,in$

$M_n := A_s \cdot f_y \cdot \left(d_{pb} - \frac{a}{2}\right)$ $M_n = 147892\,lbf \cdot ft$

$\phi_f \cdot M_n = 133103\,lbf \cdot ft$

$Check7 := if\left(\phi_f \cdot M_n \geq M_{bolt}, "OK", "NG"\right)$ $Check7 = "OK"$

Check Maximum Reinforcement (Std. Spec. 8.16.3.1):

$\rho_b := \frac{0.85 \cdot \beta_1 \cdot f'c}{f_y} \cdot \left(\frac{87000 \cdot psi}{87000 \cdot psi + f_y}\right)$ $\rho_b = 0.029$

$\rho := \frac{A_s}{b_{pb} \cdot d_{pb}}$ $\rho = 0.01327$

$Check8 := if\left(\rho \leq 0.75 \cdot \rho_b, "OK", "NG"\right)$ $Check8 = "OK"$

Check Minimum Reinforcement (Std. Spec. 8.17.1.1):

$S_b := \frac{b_{pb} \cdot h_{pb}^2}{6}$ $S_b = 459.4\,in^3$

$M_{crb} := f_r \cdot S_b$ $M_{crb} = 18158\,lbf \cdot ft$

$Check9 := if\left(\phi_f \cdot M_n \geq \min\left(1.2 \cdot M_{crb}, 1.33 \cdot M_{bolt}\right), "OK", "NG"\right)$ $Check9 = "OK"$

Check Shear (Std. Spec. 8.16.6) - Note: Shear Capacity of stirrups neglected:

$\phi_v = 0.85$ Std. Spec. 8.16.1.2.2

$V_{cb} := 2 \cdot \sqrt{\frac{f'c}{psi}} \cdot psi \cdot b_{pb} \cdot d_{pb}$ $V_{cb} = 19069\,lbf$

$Check10 := if\left(\phi_v \cdot V_{cb} \geq V_{bolt}, "OK", "NG"\right)$ Check10 = "OK"

Required Splice Length (Std. Spec. 8.25 and 8.32):

Basic Development Length (Std. Spec. 8.25.1):

$$l_{basic}(bar) := \begin{cases} \max\left(\frac{0.04 \cdot A_b(bar) \cdot f_y}{\sqrt{\frac{f'c}{psi}} \cdot psi \cdot in}, 0.0004 \cdot dia(bar) \cdot \frac{f_y}{psi}\right) & \text{if } bar \leq 11 \\ \frac{0.085 \cdot f_y}{\sqrt{\frac{f'c}{psi}} \cdot psi} \cdot in & \text{if } bar = 14 \\ \frac{0.11 \cdot f_y}{\sqrt{\frac{f'c}{psi}} \cdot psi} \cdot in & \text{if } bar = 18 \\ "error" & \text{otherwise} \end{cases}$$

$l_{basicA} := l_{basic}\left(bar_A\right)$ $l_{basicA} = 4.016\,ft$

$l_{basicB} := l_{basic}\left(bar_B\right)$ $l_{basicB} = 3.162\,ft$

Development Length (Std. Spec. 8.25):

For top reinforcement placed with more than 12 inches of concrete cast below (Std. Spec. 8.25.2.1):

$l_{dA} := l_{basicA} \cdot 1.4$ $l_{dA} = 5.623\,ft$

$l_{dB} := l_{basicB} \cdot 1.4$ $l_{dB} = 4.427\,ft$

Required Lapsplice (Y):

The required lapsplice Y is the maximum of the required lap splice length of bar A (using a Class C splice), the development length of bar B, or 2'-0" per BDM 5.1.2.D.

$LapSplice := \max\left(1.7 \cdot l_{dA}, l_{dB}, 2 \cdot ft\right)$ $LapSplice = 9.558\,ft$

Note: Lap Splices are not allowed for bar sizes greater than 11 per AASHTO Std. Spec. 8.32.1.1.

$Check11 := if\left(bar_A \leq 11 \wedge bar_B \leq 11, "OK", "NG"\right)$ Check11 = "OK"

Anchor Bolt Resistance (Std. Spec. 10.56):

$V_{bolt} = 9360\,lbf$ $V_{bolt} = 9.36\,kip$

$M_{bolt} = 131040\,lbf \cdot ft$ $M_{bolt} = 1572.48\,kip \cdot in$

$d_{bolt} := 1.0 \cdot in$ Per Design Requirements

$A_{bolt} := \frac{\pi \cdot d_{bolt}^{2}}{4}$ $A_{bolt} = 0.785\,in^2$

$F_t := 30 \cdot ksi$ Std. Spec. Tbl. 10.56A for A307

$F_v := 18 \cdot ksi$ Std. Spec. Tbl. 10.56A for A307

$PanelAxialLoad := \left(4in \cdot \frac{L}{2} + 13in \cdot 10in\right) \cdot (2 \cdot h + y - 3in) \cdot w_c$ $PanelAxialLoad = 11.959\,kip$

$f_a := \frac{PanelAxialLoad}{4 \cdot A_{bolt}}$ $f_a = 3.807\,ksi$ Axial Compressive Stress

$f_v := \frac{V_{bolt}}{4 \cdot A_{bolt}}$ $f_v = 2.98\,ksi$ Shear Stress

$Check12 := if\left(f_v \le F_v, "OK", "NG"\right)$ $Check12 = "OK"$

$f_t := \frac{M_{bolt}}{13.5in} \cdot \frac{1}{2 \cdot A_{bolt}} - f_a$ $f_t = 70.35\,ksi$ Tensile Stress

$F_{t1} := if\left[\frac{f_v}{F_v} \le 0.33, F_t, F_t \cdot \sqrt{1 - \left(\frac{f_v}{F_v}\right)^2}\right]$ $F_{t1} = 30\,ksi$ Std. Spec. 10.56.1.3.3

$Check13 := if\left(f_t \le F_{t1}, "OK", "NG"\right)$ $Check13 = "NG"$

Design Summary:

Wall Height:	$H = 24\,ft$
Required Shaft Depth:	$d = 11.18\,ft$
Maximum Shaft Shear:	$V_{shaft} = 32339\,lbf$
Maximum Shaft Moment:	$M_{shaft} = 152094\,lbf \cdot ft$
Maximum Shaft Moment Accuracy Check (Case 1):	Check1 = "OK"
Maximum Shaft Moment Accuracy Check (Case 2):	Check2 = "OK"
Bar A:	$bar_A = 10$
Post Flexural Resistance (Bar A):	Check3 = "OK"
Maximum Reinforcement Check (Bar A):	Check4 = "OK"
Minimum Reinforcement Check (Bar A):	Check5 = "OK"
Post Shear Check (Bar A):	Check6 = "OK"
Bar B:	$bar_B = 9$
Post Flexural Resistance (Bar B):	Check7 = "OK"
Maximum Reinforcement Check (Bar B):	Check8 = "OK"
Minimum Reinforcement Check (Bar B):	Check9 = "OK"
Post Shear Check (Bar B):	Check10 = "OK"
Lap Splice Length:	LapSplice = 9.558 ft
Lap Splice Allowed Check:	Check11 = "OK"
Bolt Diameter:	$d_{bolt} = 1\,in$
Anchor Bolt Shear Stress Check:	Check12 = "OK"
Anchor Bolt Tensile Stress Check:	Check13 = "NG"

Chapter 6 Structural Steel Contents

6.0	**Structural Steel**		6.0-1
	6.0.1	Introduction	6.0-1
6.1	**Design Considerations**		6.1-1
	6.1.1	Codes, Specification, and Standards	6.1-1
	6.1.2	Preferred Practice	6.1-1
	6.1.3	Preliminary Girder Proportioning	6.1-2
	6.1.4	Estimating Structural Steel Weights	6.1-2
	6.1.5	Bridge Steels	6.1-4
	6.1.6	Available Plate Sizes	6.1-5
	6.1.7	Girder Segment Sizes	6.1-5
	6.1.8	Computer Programs	6.1-6
	6.1.9	Fasteners	6.1-6
6.2	**Girder Bridges**		6.2-1
	6.2.1	General	6.2-1
	6.2.2	I-Girders	6.2-1
	6.2.3	Tub or Box Girders	6.2-2
	6.2.4	Fracture Critical Superstructures	6.2-3
6.3	**Design of I-Girders**		6.3-1
	6.3.1	Limit States for LRFD	6.3-1
	6.3.2	Composite Section	6.3-1
	6.3.3	Flanges	6.3-1
	6.3.4	Webs	6.3-2
	6.3.5	Transverse Stiffeners	6.3-2
	6.3.6	Longitudinal Stiffeners	6.3-2
	6.3.7	Bearing Stiffeners	6.3-2
	6.3.8	Crossframes	6.3-3
	6.3.9	Bottom Laterals	6.3-4
	6.3.10	Bolted Field Splice for Girders	6.3-4
	6.3.11	Camber	6.3-5
	6.3.12	Roadway Slab Placement Sequence	6.3-6
	6.3.13	Bridge Bearings for Steel Girders	6.3-7
	6.3.14	Surface Roughness and Hardness	6.3-7
	6.3.15	Welding	6.3-8
	6.3.16	Shop Assembly	6.3-10
6.4	**Plan Details**		6.4-1
	6.4.1	General	6.4-1
	6.4.2	Structural Steel Notes	6.4-1
	6.4.3	Framing Plan	6.4-1
	6.4.4	Girder Elevation	6.4-1
	6.4.5	Typical Girder Details	6.4-2
	6.4.6	Crossframe Details	6.4-2
	6.4.7	Camber Diagram and Bearing Stiffener Rotation	6.4-2
	6.4.8	Roadway Slab	6.4-3
	6.4.9	Handrail Details and Inspection Access	6.4-3
	6.4.10	Box Girder Details	6.4-3

6.5 Shop Plan Review 6.5-1

6.99 References 6.99-1

Appendix A

6.4-A1	Framing Plan	6.4-A1
6.4-A2	Girder Elevation	6.4-A2
6.4-A3	Girder Details	6.4-A3
6.4-A4	Steel Plate Girder Field Splice	6.4-A4
6.4-A5	Steel Plate Girder Crossframes	6.4-A5
6.4-A6	Steel Plate Girder Camber Diagram	6.4-A6
6.4-A7	Steel Plate Girder Roadway Section	6.4-A7
6.4-A8	Steel Plate Girder Slab Plan	6.4-A8
6.4-A9	Handrail	6.4-A9
6.4-A10	Box Girder Geometrics and Proportions	6.4-A10
6.4-A11	Example Box Girder Details	6.4-A11
6.4-A12	Example Box Girder Pier Diaphragm Details	6.4-A12
6.4-A13	Example Box Girder Miscellaneous Details	6.4-A13

6.0 Structural Steel

6.0.1 Introduction

This chapter primarily covers design and construction of steel plate girder bridge superstructures. Because of their limited application, other types of steel superstructures (truss, arch, cable stayed, suspension, etc.) are not addressed.

Plate girder bridges are commonly used for river crossings and curved interchange ramps. Typical span lengths range from 150 to 300 feet. Steel girders are also being used where limited vertical clearance requires shallow superstructure depth. They may be set over busy highway lanes with a minimum of disruption and falsework, similar to precast concrete elements. Longitudinal launching of steel framing and transverse rolling of completed steel structures have been done successfully.

English units are the current standard for detailing. Metric units may be used on a case-by-case basis. Widening or rehabilitation plan units should be consistent with the original.

6.1 Design Considerations

6.1.1 Codes, Specification, and Standards

Steel highway bridges shall be designed to the following codes and specifications:

- AASHTO LRFD *Bridge Design Specifications, Fourth Edition*
- AASHTO *Guide Specifications for Horizontally Curved Steel Girder Highway Bridges, 2003* (Retained for reference, the body of curved girder specifications have been incorporated in the main text of the LRFD code with the 2005 interims)
- AASHTO/AWS D1.5M/D1.5:2002 *Bridge Welding Code*
- ANSI/AWS A2.4-98 *Standard Symbols for Welding, Brazing, and Nondestructive Examination*

The following codes and specifications shall govern steel bridge construction:

- WSDOT *Standard Specifications for Road, Bridge, and Municipal Construction*, latest edition
- AASHTO/AWS D1.5M/D1.5:2002 *Bridge Welding Code*
- AASHTO *Guide Specifications for Highway Bridge Fabrication with HPS70W Steel*, latest edition

The following AASHTO/NSBA Steel Bridge Collaboration publications are available to aid in the design and fabrication of steel bridges:

- *Design Drawing Presentation Guidelines*
- *Guidelines for Design for Constructibility*
- *Shop Detail Drawing Presentation Guidelines*
- *Steel Bridge Fabrication Guide Specification*
- *Steel Bridge Fabrication QC/QA Guide Specification*
- *Guide Specification for Coating Systems with Inorganic Zinc-Rich Primer*
- *Practical Steel Tub Girder Design*

6.1.2 Preferred Practice

Unshored, composite construction is used for most plate girder bridges. Shear connectors are placed throughout positive and negative moment regions, for full composite behavior. One percent longitudinal deck steel, placed in accordance with LRFD article 6.10.1.7, ensures adequate deck performance in negative moment regions. For service level stiffness analysis, such as calculating live load moment envelopes, the slab may be considered composite and uncracked for the entire bridge length, provided the above methods are used. See LRFD articles 6.6.1.2.1 and 6.10.1.5. For negative moment at strength limit states, the slab is ignored while reinforcing steel is included for stress and section property calculations. Where span arrangement is not well balanced, these assumptions may not apply.

Plastic design may be utilized for simple span and positive moment regions of medium to long span plate girder bridges. In negative moment regions, plastic design is only economical for short span beams.

Currently, economical design requires simplified fabrication with less emphasis on weight reduction. The number of plate thicknesses and splices should be minimized. Also, the use of fewer girder lines, spaced at a maximum of about 14 feet, saves on fabrication, shipping, painting, and future inspection. Widely spaced girders will have heavier flanges, hence, greater stability during construction. Normally, eliminating a girder line will not require thickening remaining webs or increasing girder depth. The increased shear requirement can be met with a modest addition of web stiffeners or slightly thicker webs at interior piers.

For moderate to long spans, partially stiffened web design is the most economical. This method is a compromise between slender webs requiring transverse stiffening throughout and thicker, unstiffened webs. Stiffeners used to connect crossframes shall be welded to top and bottom flanges. Jacking stiffeners shall be used adjacent to bearing stiffeners, on girder or diaphragm webs, in order to accommodate future bearing replacement. Coordinate jack placement in substructure and girder details.

Steel framing should consist of main girders and crossframes. Bottom lateral systems should only be used when temporary bracing is not practical. Where lateral systems are needed, they should be detailed carefully for adequate fatigue life.

Standard corrosion protection for steel bridges is a three-coat paint system, west of the Cascades and where paint is required for appearance. Weathering steel should be considered for dry, eastern regions. When weathering steel is used and appearance is not critical, a single shop coat of inorganic zinc-rich primer may be considered in coastal regions.

WSDOT does not currently allow the use of steel stay-in-place deck forms.

6.1.3 Preliminary Girder Proportioning

The superstructure depth is initially determined during preliminary plan development and is based upon the span/depth ratios provided in Chapter 2 of this manual. The depth may be reduced to gain vertical clearance, but the designer should verify live load deflection requirements are met. See LRFD table 2.5.2.6.3-1. It is office practice to limit live load deflections in accordance with the optional criteria of LRFD articles 2.5.2.6.2 and 3.6.1.3.2.

The superstructure depth is typically shown as the distance from the top of the concrete roadway slab to the bottom of the web. Web depths are generally detailed in multiples of 6 inches.

On straight bridges, interior and exterior girders should be detailed as equal. Spacing should be such that the distribution of wheel loads on the exterior girder is close to that of the interior girder. The number of girder lines should be minimized, with a maximum spacing of 14 feet. Three or more girders lines are considered redundant. If a non-redundant bridge is proposed, approval must be obtained from the Bridge Design Engineer.

6.1.4 Estimating Structural Steel Weights

For the preliminary quantities or preliminary girder design, an estimate of steel weights for built-up plate composite “I” girders can be obtained from Figure 6.1.4-1 This figure is based upon previous designs with AASHTO HS-20 live loads with no distinction between service load designs and load factor designs. This chart also provides a good double check on final quantities.

The weights shown include webs, flanges, and all secondary members (web stiffeners, diaphragms, crossframe, lateral systems, gusset plates) plus a small allowance for weld metal, bolts, and shear connectors.

Both straight and curved box girder quantities may be estimated with the chart, using a 10 to 20 percent increase.

The chart should only be used for a lower bound estimate of curved I-girder weight. Roadway width and curvature greatly influence girder weight, including cross frames.

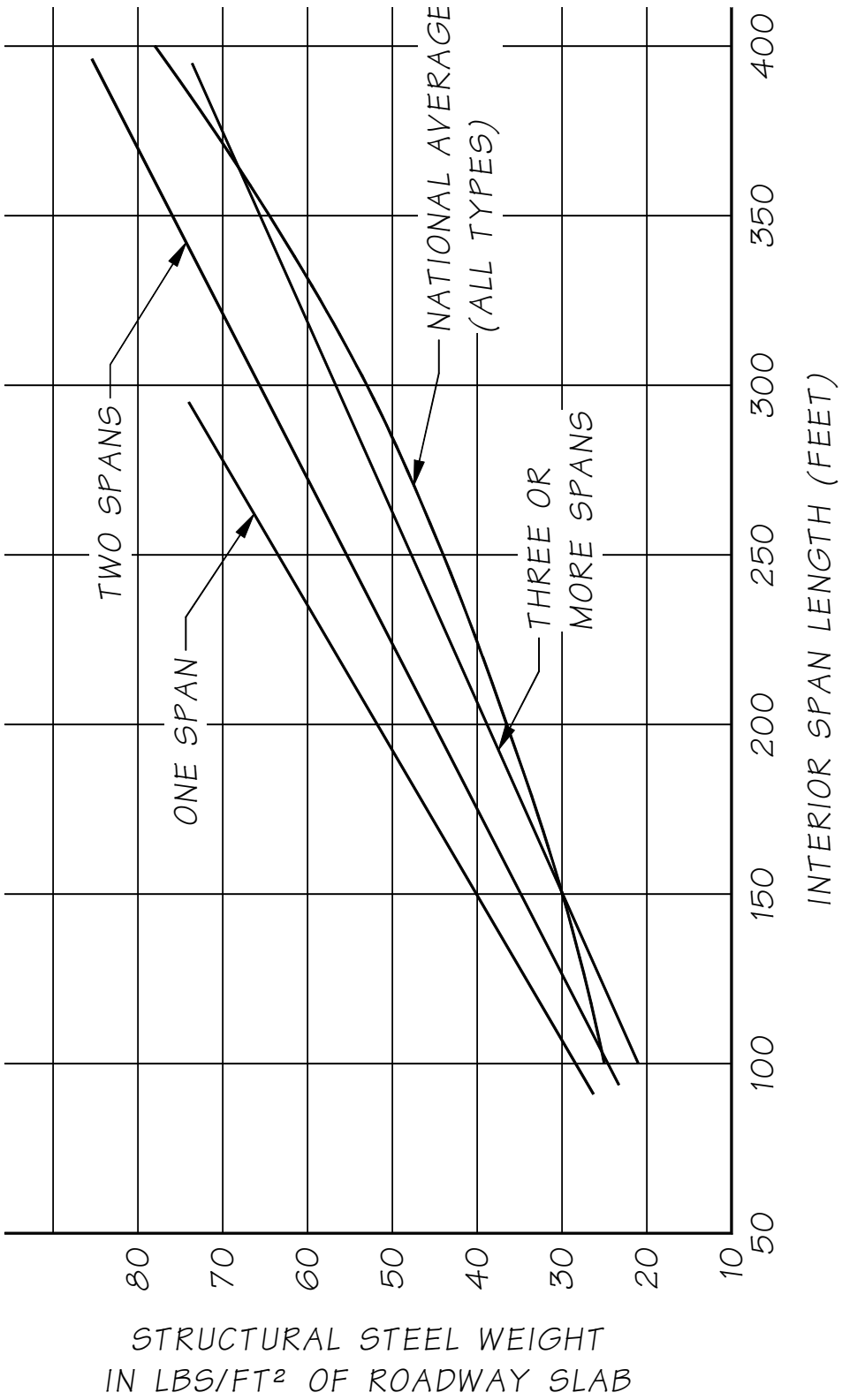

Composite Welded Steel Plate "I" Girder
Figure 6.1.4-1.

6.1.5 Bridge Steels

The most common types of steel used for bridges are now grouped in ASTM A 709 or AASHTO M 270 specifications. The following table shows equivalent designations. Grades of steel are based on minimum yield point.

ASTM	ASTM A 709/ AASHTO M 270
A 36	Grade 36
A 572 gr 50	Grade 50
A 992 (W shapes)	Grade 50S
A 588	Grade 50W
	Grade HPS50W
A 852	Grade 70W
---	Grade HPS70W
A 514*	Grade 100*
	Grade l00W*

* Minimum yield strength is 90 ksi for plate thickness greater than 2½".

Plates and rolled sections are available is these specifications and grades. Rolled sections include beams (W, S, and M shapes), H-piles, tees, channels, and angles. These materials are prequalified under the Bridge Welding Code. The common specification for wide flange beams is now ASTM A 992.

Use AASHTO M 270 grades 50 or 50W for plate girders. The fabricated costs of structural carbon and structural low alloy steel plate girders are about equal. AASHTO now recommends grade HPS70W instead of grade 70W for bridge use. HPS70W can be economical if used selectively in hybrid design. For moderate spans consider HPS70W for the bottom flanges throughout and top flanges near interior piers. The use of M 270 grade 100 or 100W requires approval by the Bridge Design Engineer, and should not be used until grade HPS100W is available.

All main load-carrying members or components subject to tensile stress shall be identified in the plans and be required to meet the minimum Charpy V-notch (CVN) fracture toughness values as specified in LRFD table 6.6.2-2, temperature zone 2. Fracture critical members or components shall also be designated in the plans.

Availability of weathering steel can be a problem for some sections. For example, steel suppliers do not stock angles or channels in weathering steel. Weathering steel wide flange and tee sections are difficult to locate or require a mill order. ASTM A 709 and AASHTO M 270 bridge steels are not stocked by local service centers. The use of bridge steel should be restricted to large quantities such as found in typical plate girder projects. The older ASTM specification steels, such as A 36, should be specified when a fabricator would be expected to purchase from local service centers. The older AASHTO designations, such as M183, have been dropped.

Structural tubes and pipes are covered by other specifications. See the latest edition of the AISC *Manual of Steel Construction* for selection and availability. These materials are not considered prequalified under the Bridge Welding Code. They are covered under the Structural Welding Code AWS D1.1. Structural tubing ASTM A 500 is not recommended for dynamic loading applications unless minimum CVN requirements are specified.

6.1.6 Available Plate Sizes

Readily available lengths and thicknesses of steel plates should be used to minimize costs. Tables of standard plate sizes have been published by various steel mills and should be used for guidance. These tables are available through the steel specialist, or online.

In general, an individual plate should not exceed 12′-6″ feet in width, including camber requirements, or a length of about 60 feet. If either or both of these dimensions are exceeded, a butt splice is required and should be shown or specified on the plans. Some plates may be available in lengths over 90 feet, so web splice locations should be considered optional. Quenched and tempered plates are limited to 50 feet, based on oven size.

Plate thicknesses of less than 5/16 inches should not be used for bridge applications.

When metric units are used, all steel dimensions, including thickness, should be hard converted. For example, specify 25 mm, not 25.4 mm plate.

Preferred plate thicknesses, English units, are a follows:

- 5/16” to ⅞” in 1/16” increments
- ⅞” to 1 ¼” in ⅛” increments
- 1¼” to 4” in ¼” increments

6.1.7 Girder Segment Sizes

Locate bolted field splices so that individual girder segments can be handled, shipped, and erected without imposing unreasonable requirements on the contractor. Crane limitations need to be considered in congested areas near traffic or buildings. Transportation route options between the girder fabricator and the bridge site can affect the size and weight of girder sections allowed. Underpasses with restricted vertical clearance in sag vertical curves can be obstructions to long, tall segments shipped upright. The region should help determine the possible routes, and the restrictions they impose, during preliminary planning or early in the design phase.

Segment lengths should be limited to 150 feet, depending upon cross section. Long, slender segments can be difficult to handle and ship due to their flexibility. Horizontal curvature of girder segments may increase handling and shipping concerns. Out-to-out width of curved segments, especially box girders, should not exceed 14 feet without additional travel permits and requirements. Weight is seldom a controlling factor for I-girders. However, 40 tons is a practical limit for some fabricators. Limit weight to a maximum of 100 tons if delivery by truck is anticipated.

Consider the structure’s span length and the above factors when determining girder segment lengths. In general, field splices should be located at dead load inflection points. When spans are short enough, some field splices can be designated optional if resulting segment lengths and weights meet the shipping criteria.

6.1.8 Computer Programs

The designer should consult the design supervisor to determine the computer program best suited for a particular bridge type.

Office practice and good engineering principles require that the results of any computer program or analysis be independently verified for accuracy. Also, programs with built-in code checks must be checked for default settings. Default settings may reflect old code or office practice may supersede the code that the program was written for.

6.1.9 Fasteners

All bolted connections shall be friction type (slip-critical). Assume Class B faying surfaces where inorganic zinc primer is used. If steel will be given a full paint system in the shop, the primed faying surfaces need to be masked to maintain the Class B surface.

Properties of High-Strength Bolts

Material	Bolt Diameter	Tensile Strength ksi	Yield Strength ksi
AASHTO M 164	⅝ - 1 inc	120	92
(ASTM A325)	1⅛ - 1½ inc.	105	81
	Over 1½		Not Available
ASTM A 449	¼ - 1 inc	120	92
(No AASHTO	1⅛ - 1½ inc.	105	81
equivalent)	1¾ -3 inc.	90	58
	Over 3		Not Available
AASHTO			
M 314	¼ - 3 inc	125-150	105
(ASTM F 1554)			
Grade 105			
AASHTO			
M253	⅝ - 1½ inc.	150-170	130
(ASTM A 490)			
	Over 1½		Not Available
ASTM A 354	½ - 2½ inc.	150	130
Grade BD			
(No AASHTO	3 - 4 inc.	140	115
equivalent)	Over 4		Not Available

General Guidelines for Steel Bolts

A. M 164 (A325)
High strength steel, headed bolts for use in structural joints. These bolts may be hot-dip galvanized. Do not specify for anchor bolts.

B. A449
High strength steel bolts and studs for general applications including anchor bolts. Recommended for use as anchor bolts where strengths equivalent to A325 bolts are desired. These bolts may be hot-dip galvanized. Do not use these anchor bolts for seismic applications due to low CVN impact toughness.

C. M 314 (F1554)
Grade 105 — Higher strength anchor bolts to be used for larger sizes (1½″ to3″). When used in seismic applications, ASTM F 1554 shall be specified, since AASHTO M 314 lacks the CVN supplemental requirements. Specify supplemental CVN requirement S5 when these are used in seismic applications (most bridge bearings that resist lateral loads). Lower grades may also be suitable for sign structure foundations. This specification should also be considered for seismic restrainer rods, and may be galvanized.

D. M 253 (A490)
High strength alloy steel, headed bolts for use in structural joints. These bolts should not be galvanized, because of the high susceptibility to hydrogen embrittlement. In lieu of galvanizing, the application of an approved zinc rich paint may be specified. Do not specify for anchor bolts.

E. A354
Grade BD — high strength alloy steel bolts and studs. These are suitable for anchor bolts where strengths equal to A490 bolts are desired. These bolts should not be galvanized. If used in seismic applications, specify minimum CVN toughness of 25 ft-lb at 40°F.

6.2 Girder Bridges

6.2.1 General

Once the material of choice, structural steel has been eclipsed by reinforced and prestressed concrete. Corrosion and fatigue cracking have contributed to unanticipated life cycle costs. Fabrication and material costs have also contributed to steel's relative cost disadvantage. Costs may be minimized by simplifying fabrication details, optimizing the number of girder lines, allowing for repetitive fabrication of components such as crossframes and stiffeners, and ensuring ease of shipping and erecting.

The specifications allow a combination of plastic design in positive moment regions and elastic design in negative moment regions. Plate girders, of the depths typically built in this state, have traditionally been designed to elastic limits or lower. Newer design methods may help reduce steel weight and narrow the cost gap between steel and concrete bridges. High performance steel can be used to advantage saving weight and painting.

6.2.2 I-Girders

Welded plate I-girders constitute the majority of steel girders designed by WSDOT. The I-girder represents an efficient use of material for maximizing stiffness. Its shortcoming is inefficiency in resisting shear. Office practice is to maintain constant web thickness and depth for short to medium span girders. Weight savings is achieved by minimizing the number of webs used for a given bridge. This also helps minimize fabrication, handling, and painting costs. Current office practice is to use a minimum of three girders to provide redundant load path structures. Two girder superstructures are considered non-redundant and hence, fracture critical.

Buckling behavior of relatively slender elements complicates steel plate girder design. Most strength calculations involve checks on buckling in some form. Local buckling can be a problem in flanges, webs, and stiffeners if compression is present. Also, overall stability needs to be insured for all stages of construction, with or without a roadway deck. The art of designing steel girders is to minimize material and fabrication expense while ensuring adequate strength, stiffness, and stability.

I-girders are an excellent shape for welding. All welds for the main components are easily accessible and visible for welding and inspection. The plates are oriented in the rolling direction to make good use of strength, ductility, and toughness of the structural steel. The web is attached to the top and bottom flanges with continuous fillet welds. Usually, they are made with automatic submerged arc welders. These welds are loaded parallel to the longitudinal axis and resist horizontal shear between the flanges and web. Minimum size welds based on plate thickness will satisfy strength and fatigue requirements in most cases. The flanges and webs are fabricated to full segment length with full penetration groove welds. These welds are inspected by ultrasound (UT) 100 percent. Tension welds, as designated in the plans, are also radiographed (RT) 100 percent. Office practice is to have flanges and webs fabricated full length before they are welded into the "I" shape. Weld splicing built-up sections results in poor fatigue strength and zones that are difficult to inspect. Quality welding and inspection requires good access for both.

6.2.3 Tub or Box Girders

Typical steel box girders for WSDOT are trapezoidal tub sections. Using single top flange plates to create true box sections is very uncommon when reinforced concrete decks are used. Tub girders will be referred to herein as box girders, as in LRFD article 6.11.

The top lateral system placed inside the girder is treated as an equivalent plate, closing the open section, to increase torsional stiffness before slab curing. Although not required by the code, it helps ensure stability that may be overlooked during construction. Partial or temporary bracing may be used provided it is properly designed and installed. Dramatic construction failures have occurred due to insufficient bracing of box girders. Stability of the shape must be ensured for all stages of construction per LRFD article 6.11.3. The cured deck serves to close the section for torsional stiffness. Internal crossframes or diaphragms are used to maintain the shape and minimize distortion loading on individual plates and welds making up the box. Box segments will have considerable torsional stiffness when top lateral bracing is provided. This may make fit-up in the field difficult.

The ability to make box girders with high torsional stiffness makes them a popular choice for short radius curved structures. Curved box girders, because of inherent torsional stiffness, behave differently than curved I-girders. Curved box girder behavior is approximated by the M/R method, rather than the V-load method. See curved girder references listed at the end of this chapter for complete description.

Straight box girders, when proportioned in accordance with LRFD article 6.11.2 may be designed without consideration of distortional stresses. The range of applicability for live load distribution is based on:

$$0.5 \le N_L/N_b \le 1.5$$

which limits the number of lanes loading each box. Wide box girder spacing, outside this range, will require additional live load analysis. Consideration must be given to differential deflection between boxes when designing the roadway deck. Generally, use of crossframes between boxes is limited to long spans with curvature.

Box girders should be detailed for single bearings per box. If bearings are located under each web, distribution of loads is uncertain. Generally, plate diaphragms with access holes are used in place of pier crossframes.

With the exception of effects from inclined webs, top flanges and webs are designed as if they were part of individual I-girders.

The combined bottom flange is unique to box girders. In order to maximize web spacing while minimizing bottom flange width, office practice is to place webs out of plumb on a slope of 1 in 4. Wide plates present two difficulties: excessive material between shop splices and buckling behavior in compression zones (interior piers). To keep weight and plate thickness within reason, it is often necessary to stiffen the bottom flange in compression with longitudinal stiffeners. Office practice is to use tee sections for longitudinal stiffeners and channel bracing at crossframe locations (transverse stiffeners). If possible, bottom flange stiffeners are terminated at field splices. Otherwise, carefully ground weld terminations are needed in tension regions with high stress range. Due to the transverse flexibility of thin wide plates, stiffener plates are welded across the bottom flange at crossframe locations, combined with web vertical stiffeners. For the design of the bottom flange in compression, see LRFD articles 6.11.8.2 and 6.11.11.2.

6.2.4 Fracture Critical Superstructures

Non-redundant, fracture critical single tub superstructures may sometimes be justified. In which case, approval for this bridge type must be obtained from the Bridge Design Engineer. Conditions that favor this option are narrow one lane ramps, especially with tightly curved alignments, at locations within existing mainline interchanges. Flyover ramps often fall into these constraints. The box section allows in-depth inspection access without significant disruption to mainline traffic. UBIT access over urban interstate lanes is becoming increasingly difficult to obtain.

Where curvature is significant, the box section is a stiffer, more efficient load carrying system than a twin I-girder system. If a twin I-girder system is to be used, approval must also be secured. Some form of permanent false decking or other inspection access needs to be included over mainline lanes that will be difficult to close for UBIT access. This access needs to be appropriate for fracture critical inspections. If curvature is not severe, the twin I-girder system may prove to be more economical than a single box.

The maximum roadway width for either a single box or twin I-girder superstructure is about 27 feet. Where roadway width exceeds this, additional girders should be used. Mainline structures, usually exceeding 38 feet in width, will require a minimum of three webs, with four webs being the preferred minimum.

Increased vertical clearance from mainline traffic should be obtained for either of these bridge types. A desirable minimum is 20 feet. Box sections tend to offer greater stiffness than equal depth I-girders, especially on curved alignment. The web depth may be reduced below LRFD Table 2.5.2.6.3-1 minimums provided live load deflection criteria are met. However, avoid web depth less than 5’-0” so that inspection access is within reason. The desirable minimum web depth for boxes is 6’-6”. Box sections with web depth of 6’-6” should be capable of interior spans up to 250 feet. Main spans of 150 feet should be considered the low end of this girder type’s economical range. Because of the proximity of flyover ramps to high numbers of observers, attempt to streamline their superstructure depths where economical and deflection criteria can be achieved.

Use high performance steels, AASHTO M270 grades HPS50W or HPS70W for these girder types. Grades of steel with equal CVN toughness may be considered, however the improved through-thickness properties of the HPS grades should also be considered. If practical, maintain a maximum flange thickness of 2” when using HPS for better properties and plate availability. The improved toughness of HPS will lower the chance of sudden crack propagation if a crack does become visible to casual observation.

The limit state load modifier relating to redundancy, $\eta_r = 1.05$, as specified in LRFD 1.3.4 shall be used in the design of non-redundant steel structures.

The LRFD approximate live load distribution factors are not applicable to these girder types. The level rule or the preferred refined analysis shall be used. Where highly curved, only a refined analysis should be used.

6.3 Design of I-Girders

6.3.1 Limit States for LRFD

Structural components shall be proportioned to satisfy the requirements of strength,extreme event, service, and fatigue limit states as outlined in LRFD articles1.3.2 and 6.5.

Service limit states are included in Service I and Service II load combinations. Service I load combination is used to check the live load deflection limitations of LRFD article 2.5.2.6. Service II load combination is the LRFD equivalent of the LFD overload provisions. Service II places limits on permanent deflection, no yielding, slenderness of the web in compression, and slip of bolted connections.

The fatigue live load specified in LRFD article 3.6.1.4 shall be used for checking girder details per article 6.6. A single fatigue truck, without lane loading or variable axle spacing, is placed for maximum and minimum effect to a detail under investigation. The impact is 15%, regardless of span length. The load factor is 0.75. It is generally possible to meet the constant amplitude fatigue limit (CAFL) requirement for details with good fatigue performance. Limiting twice the calculated fatigue range to the CAFL ensures infinite fatigue life. Webs shall be checked for fatigue loading in accordance with LRFD article 6.10.5.3, using twice the calculated fatigue stress range for flexure or shear. Shear connector spacing shall be according to LRFD article 6.10.10. Generally, the fatigue resistance (Zr) for ⅞” diameter shear connectors can be taken as 2.1 kips for an infinite number of cycles (CAFL = 4.2 kips).

Flanges and webs must meet strength limit state requirements for both construction and final phases. Constructibility requirements for flanges and webs are covered in LRFD article 6.10.3. Flexure resistance is specified in LRFD articles 6.10.7 and 6.10.8; shear resistance is specified in LRFD article 6.10.9

Pier crossframes shall be designed for seismic loading, extreme event load combination. Bolts are treated as bearing type connections with LRFD article 6.5.4.2 resistance factors. The resistance factor for all other members is 1.0 at extreme limit state.

6.3.2 Composite Section

Live load plus impact is applied to the transformed composite section using Es/Ec, commonly denoted n. Long-term loading (dead load of barriers, signs, luminaries, overlays, etc.) is applied to the transformed composite section using 3n. Positive moments are applied to these composite sections accordingly, both for service and strength limit states. The slab may be considered effective in negative moment regions provided tensile stresses in the deck are below the modulus of rupture. This is generally possible for Service I load combination and fatigue analysis. For strength limit state loadings, the composite section includes longitudinal reinforcing while the deck is ignored.

6.3.3 Flanges

Flange thickness is limited to 4” maximum in typical bridge plate, but the desirable maximum is 3”. The number of plate thicknesses used for a given project should be kept to a minimum. Generally, the bottom flange should be wider than the top flange. Flange width changes should be made at bolted field splices. Thickness transitions are best done at welded splices. LRFD article 6.13.6.1.5 requires fill plates at bolted splices to be developed, if thicker than ¼”. Since this requires a significant increase in the number of bolts for thick fill plates, keeping the thickness transition ¼” or less by widening pier segment flanges can be a better solution. Between field splices, flange width should be kept constant.

6.3.4 Webs

Maintain constant web thickness throughout the structure. If different web thickness is needed, the transition should be at a welded splice. Horizontal web splices are not needed unless web height exceeds 12′-6″. Vertical web splices for girders should be shown on the plans in an elevation view with additional splices made optional to the fabricator. All welded web splices on exterior faces of exterior girders and in tension zones elsewhere shall be ground smooth. Web splices of interior girders need not be ground in compression zones.

6.3.5 Transverse Stiffeners

These stiffeners shall be used in pairs at crossframe locations on interior girders and on the inside of webs of exterior girders. They shall be welded to the top flange, bottom flange and web at these locations. This detail is considered fatigue category C' for longitudinal flange stress. Stiffeners used between crossframes shall be located on one side of the web, welded to the compression flange, and cut short of the tension flange. Stiffeners located between crossframes in regions of stress reversal shall be welded to one side of the web and cut short of both flanges. Alternatively, they may be welded to both flanges if fatigue Category C' is checked. Transverse stiffeners may be dropped when not needed for strength. If crossframe spacing is less than 3 times the web depth, additional stiffeners may only be necessary near piers.

Stiffened webs require end panels to anchor the first tension field. If jacking stiffeners are placed next to bearing stiffeners, the space created may be used as the anchor panel. Otherwise, the first transverse stiffener is placed no greater than 1.5 times the web depth from the bearing stiffener.

Transverse stiffeners must be designed and detailed to meet LRFD article 6.10.11.1. Where they are used to connect crossframes, they should be a minimum width of 8" to accommodate two bolt rows.

6.3.6 Longitudinal Stiffeners

On long spans where web depths exceed 10 feet, comparative cost evaluations shall be made to determine whether the use of longitudinal stiffeners will be economical. The use of longitudinal stiffeners may be economical on webs 10 feet deep or greater. Weld terminations for longitudinal stiffeners are fatigue prone details. Longitudinal stiffener plates should be continuous, splices being made with full penetration welds before being attached to webs. Transverse stiffeners should be pieced to allow passage of longitudinal stiffeners.

Design of longitudinal stiffeners is covered by LRFD article 6.10.11.3.

6.3.7 Bearing Stiffeners

Stiffeners are required at all bearings to enable the reaction to be transmitted from the web to the bearing. These stiffeners are designated as columns, therefore, must be vertical under total dead load. The connection of the bearing stiffener to flanges consists of partial penetration groove welds, of sufficient size to transmit design loads.

Pier crossframes may transfer large seismic lateral loads through top and bottom connections. Weld size must be designed to ensure adequate load path from deck and crossframes into bearings.

Design of bearing stiffeners is covered by LRFD article 6.10.11.2.

6.3.8 Crossframes

The primary function of intermediate crossframes is to provide stability to individual girders or flanges. Crossframes or diaphragms are required at each support to brace girders; they should be as near to full-depth as practical. Crossframes share live load distribution between girders with the concrete deck. The approximate LRFD live load distribution factors were based on the absence of intermediate crossframes. Where crossframes are present, the exterior girder distribution factors are also determined according to LRFD article 4.6.2.2.2d (conventional approximation for loads on piles). On curved bridges, the crossframes also resist twisting of the superstructure. Pier crossframes are subjected to lateral loads from wind, earthquake, and curvature. These forces are transmitted from the roadway slab to the bearings by way of the pier crossframes. Intermediate crossframes also resist wind load to the lower half of the girders. The primary load path for wind is the concrete deck and pier diaphragms. Wind load on the bottom flange is shed incrementally to the deck through intermediate crossframes. The essential function, however, is to brace the compression flanges for all stages of construction and service life. As such, continuous span girders require bottom flange bracing near interior supports. Office practice requires intermediate crossframes, at spacing consistent with design assumptions. The 25 foot maximum spacing of older specifications is not maintained in the LRFD code. A rectangular grid of girders and crossframes is not significantly stiff laterally before the deck is cured. Both wind and deck placement can cause noticeable deflections. In the case of deck placement, permanent sideway and rotation of the steel framing may result. Some form of temporary or permanent lateral bracing is therefore required.

Crossframes and connections should be detailed for repetitive fabrication, adjustment in the field, and openness for inspection and painting. Avoid back-to-back angles separated by gusset plates. These are difficult to repaint. Crossframes are generally patterned as K-frames or as X-frames. Typically the configuration selected is based on the most efficient geometry. The diagonals should closely approach a slope of 1:1 or 45°. Avoid conflicts with utilities passing between the girders. Detailing of crossframes should follow guidelines of economical steel bridge details promoted by the National Steel Bridge Alliance. Office practice is to bolt rather than weld individual pieces, to provide some field adjustment. Oversize holes are not allowed in crossframe connections if girders are curved.

Intermediate crossframes for straight girders with little or no skew should be designed as secondary members. Choose members that meet minimum slenderness requirements and design connections only for anticipated loads, not for 75 percent strength of member.

In general, crossframes should be installed parallel to piers for skew angles of 0° to 20°. For greater skew angles, other arrangements may be used. Consult with the design unit supervisor or the steel specialist for special requirements.

Intermediate crossframes for curved I-girders require special consideration. Curved girder systems should be designed according to AASHTO “Guide Specifications for Horizontally Curved Highway Bridges.” Crossframes for curved girder bridges are main load carrying members and tension components should be so designated in the plans. For highly curved systems, it is more efficient to keep members and connections concentric, as live loads can be significant. Welded connections should be carefully evaluated for fatigue.

Web stiffeners at crossframes shall be welded to top and bottom flanges. This practice minimizes out-of-plane bending of the girder web.

Bridge widening requires special attention to girder stability during slab placement. Lateral movement and rotation has been common with widening projects around the country. Narrow framing, such as a two girder widening, requires bracing to an existing structure. A common method for bracing is to install crossframes (in bay between existing and new girders) with only enough bolts installed to allow for differential deflection but no rotation. Remaining bolts can be installed through field-drilled holes after the slab has cured.

6.3.9 Bottom Laterals

Bottom lateral systems are expensive to install permanently. If possible, they should be avoided in favor of alternative bracing methods. They are seldom required in the completed structure, but may contribute to nuisance fatigue cracking or fracture in the main girders.

The primary function of a bottom lateral system is to stabilize the girders against lateral loads and translation before the deck hardens. The layout pattern is based on number of girder lines, girder spacing, and crossframe spacing. Cost considerations should include geometry, repetition, number, and size of connections. If used, limit bottom laterals to one or two bays.

For both straight and curved structures, bottom laterals carry dead and live loads, in proportion to distance from the neutral axis. They should be modeled in the structure to determine the actual forces the members experience. Since they carry slab dead load, they should be accounted for when calculating camber.

Where lateral gusset plates are fillet welded to girder webs, the fatigue stress range in the girder is limited to Category E without transition radius, or Category D with carefully made transition radius. The gusset plates should be bolted to the girder web in regions of high tension stress range.

For widening projects, bottom laterals are not needed since new can be braced against existing construction. Framing which is adequately braced should not require bottom laterals.

6.3.10 Bolted Field Splice for Girders

Office practice is to use bolted field splices. Splices are usually located at the dead load inflection point to minimize the design bending moment. See LRFD articles 6.13.2 and 6.13.6.1 for bolted splice design requirements. A method for designing web splices is now outlined in LRFD article 6.13.6.1.4b. Bolted web splices should not involve thin fill material. Thickness transitions for webs, if needed, should be done with welded shop splices.

Flange splice design is outlined in LRFD article 6.13.6.1.4c. For splice plates at least ⅜” thick and ⅞" diameter bolts, threads may be excluded from all shear planes for a 25% increase in strength, per LRFD article 6.13.2.7. Bolts designed with threads excluded from shear planes shall be designated as such in the plans. Generally, bolts in girder field splices may be designed for double shear.

A new requirement has been added for developing fillers used in bolted splices, LRFD article 6.13.6.1.5. When fill plates are greater than ¼”, the splice or filler needs to be extended for additional bolts. As filler thickness increases, the shear resistance of bolts decreases. A way of minimizing filler thickness is to transition flange width for pier segments. Using equal plate thickness by this method has the added benefit of reducing the number of plate sizes in a project.

Splice bolts shall be checked for Strength load combinations and slip at Service II load combination. When faying surfaces are blasted and primed with inorganic zinc paint, a Class B surface condition is assumed.

Fabrication of girder splices is covered by WSDOT Standard Specification 6-03.3(27) and 6-03.3(28). Method of field assembly is covered by section 6-03.3(32) and bolting inspection and installation by section 6-03.3(33). Since bolted joints have some play due to differences in bolt diameter and hole size, field splices are drilled while segments are set in proper alignment in the shop. The joint is pinned (pin diameter equals hole size to prohibit movement) for shop assembly and also during initial field fit-up. Normally, this ensures repeatability of joint alignment from shop to field.

6.3.11 Camber

Camber includes effects of profile grade, superelevation, anticipated dead load deflections, and slab shrinkage (if measurable). Permanent girder deflections shall be shown in the contract plans in the form of camber diagrams and tables. Dead load deflections are due to steel self-weight, slab dead load, and superimposed dead loads such as overlay, sidewalks, and barriers. Since fabricated camber and girder erection have inherent variability, slab form height is adjusted after steel has been set. Although a constant distance from top of web to top of deck is assumed, this will vary along the girders. Deck forms without adjustment for height are not allowed. Girders must be profiled once fully erected, and before deck forms are installed. See *Standard Specification* 6-03.3(39).

Girder camber is established at three stages of construction. First, girder webs are cut from plates so that the completed girder segment will assume the shape of reverse dead load deflections superimposed on profile grade. Only minor heat corrections may be made in the shop to meet the camber tolerance of the Bridge Welding Code AWS D1.5 chapter 3.5. Camber for plate girders is not induced by mechanical force. The fabricated girder segment will incorporate the as-cut web shape and minor amounts of welding distortion. Next, the girder segments are brought together for shop assembly. Field splices are drilled as the segments are placed in position to fit profile grade plus total dead load deflection (no load condition). Finally, the segments are erected, sometimes with supports at field splices. There may be slight angle changes at field splices, resulting in altered girder profiles. Errors at mid-span can be between one to two inches at this stage.

The following is a general outline for calculating camber and is based on girders having shear studs the full length of the bridge.

Two curves will be required, one for total dead load plus slab shrinkage and one for steel framing self-weight. The difference between these curves is used to set deck forms and adjust screed rails.

Girder dead load deflection is determined by using various computer programs. Many steel girder design programs incorporate camber calculation. Girder self-weight is assumed to include the basic section plus stiffeners, crossframes, welds, shear studs, etc. These items may be accounted for by adding an appropriate percentage of basic section weight (15% is a good rule of thumb). Total dead load camber shall consist of deflection due to:

A. Steel weight, applied to steel section.

B. Slab weight, applied to steel section. This should be the majority of dead load deflection.

C. Traffic barriers, sidewalks, and overlays, applied to long-term composite section using 3n.

D. Slab shrinkage (if ≥ ¾").

Slab dead load deflection will require the designer to exercise some judgment concerning degree of analysis. A two or three span bridge of regular proportions, for example, should not require a rigorous analysis. The slab may be assumed to placed instantaneously on the steel section only. Generally, due to creep, deflections and stresses slowly assume a state consistent with instantaneous slab placement. For unusual girder arrangements, and especially structures with in-span hinges, an analysis coupled with a slab pour sequence may be justified. This would require an incremental analysis where previous slab pours are treated as composite sections (using a modulus of elasticity for concrete based on age at time of second pour) and successive slab pours are added on noncomposite sections. Each slab pour requires a separate deflection analysis. The total effect of slab construction is the superposition of each slab pour.

Traffic barriers, sidewalks, overlays, and other items constructed after the slab pour should be analyzed as if applied to the long-term composite section full length of the bridge. The modulus of elasticity of the slab concrete should be reduced to one third of its short term value. For example, if f'c = 4000 psi, then use a value of n = 24.

Slab shrinkage has a varying degree of effect on superstructure deflections. The designer must use some judgment in evaluating this effect on camber. Slab shrinkage should be the smallest portion of the total camber. It has greater influence on shallower girder sections, say rolled beams. Simple spans will see more effect than continuous spans. For medium to long span continuous girders (spans over 200 feet without any in-span hinges), slab shrinkage deflection can be ignored. For simple span girders between 150 and 250 feet, the deflection should not exceed 1". For calculation, apply a shrinkage strain of about 0.0002 to the long-term composite section using 3n.

In addition to girder deflections, show girder rotations at bearing stiffeners. This will allow shop plan detailers to compensate for rotations so that bearing stiffeners will be vertical in their final position.

Camber tolerance is governed by the Bridge Welding Code AWS D1.5, chapter 3.5. A note of clarification is added to the plan camber diagram: "For the purpose of measuring camber tolerance during shop assembly, assume top flanges are embedded in concrete without a designed haunch." This allows a high or low deviation from the theoretical curve. In the past, no negative camber tolerance was allowed.

6.3.12 Roadway Slab Placement Sequence

The roadway slab is placed in a prescribed sequence allowing the concrete in each segment to shrink with minor influence on other segments. Negative moment regions (segments over interior piers) must be placed after positive moment regions have had time to cure. This helps minimize shrinkage cracking and provides manageable volumes of concrete for a work shift.

Positive moment regions should be placed first, while negative moment regions are placed last. Successive segments should not be placed until previous segments attain strengths of about 2000 psi or cure 3 to 7 days. This general guideline is sufficient for typical, well balanced span arrangements. For unbalanced span arrangements, the designer should check slab tensile stresses imposed on adjoining span segments. Required concrete strength can be increased, but needless delays waiting for higher strengths should be avoided. Also, the contractor should be given the option of placing positive moment segments with little influence on each other at a convenient rate, regardless of curing time. That is, segments separated by a span could be placed the same or next day without any harm. These can be lumped in the same pour sequence.

6.3.13 Bridge Bearings for Steel Girders

Make bearing selection consistent with required motions and capacities in the following order of preference, high to low:

- No bearings (integral abutments or piers)
- Elastomeric bearings
- Fabric pad bearings
- Steel cylindrical (pin) bearings
- Disk bearings
- Spherical bearings

6.3.14 Surface Roughness and Hardness

The standard measure of surface roughness is the microinch value. Surface roughness shall be shown on the plans for all surfaces for which machining is required unless covered by the Standard Specifications or Special Provisions. Consult *Machinery's Handbook* for common machining practice. Edge finishing for steel girders is covered in *Standard Specification* 6-03.3(14). Surface hardness of thermal cut girder flanges is also controlled.

Following is a brief description of some finishes:

1000 A surface produced by thermal cutting

500 A rough surface finish typical of "as rolled" sections. Suitable for surfaces that do not contact other parts and for bearing plates on grout.

250 A fairly smooth surface. Suitable for connections and surfaces not in moving contact with other surfaces. This finish is typical of ground edges in tension zones of flanges.

125 A fine machine finish resulting from careful machine work using high speeds and taking light cuts. It may be produced by all methods of direct machining under proper conditions. Suitable for steel to steel bearing or rotational surfaces including rockers and pins.

63 A smooth machine finish suitable for high stress steel to steel bearing surfaces including roller bearings on bed plates.

32 An extremely fine machine finish suitable for steel sliding parts. This surface is generally produced by grinding.

16 A very smooth, very fine surface only used on high stress sliding bearings. This surface is generally produced by polishing.

For examples, see Figure 6.3.14-1.

For stainless steel sliding surfaces, specify a #8 mirror finish. This is a different method of measurement and reflects industry standards for polishing. No units are implied.

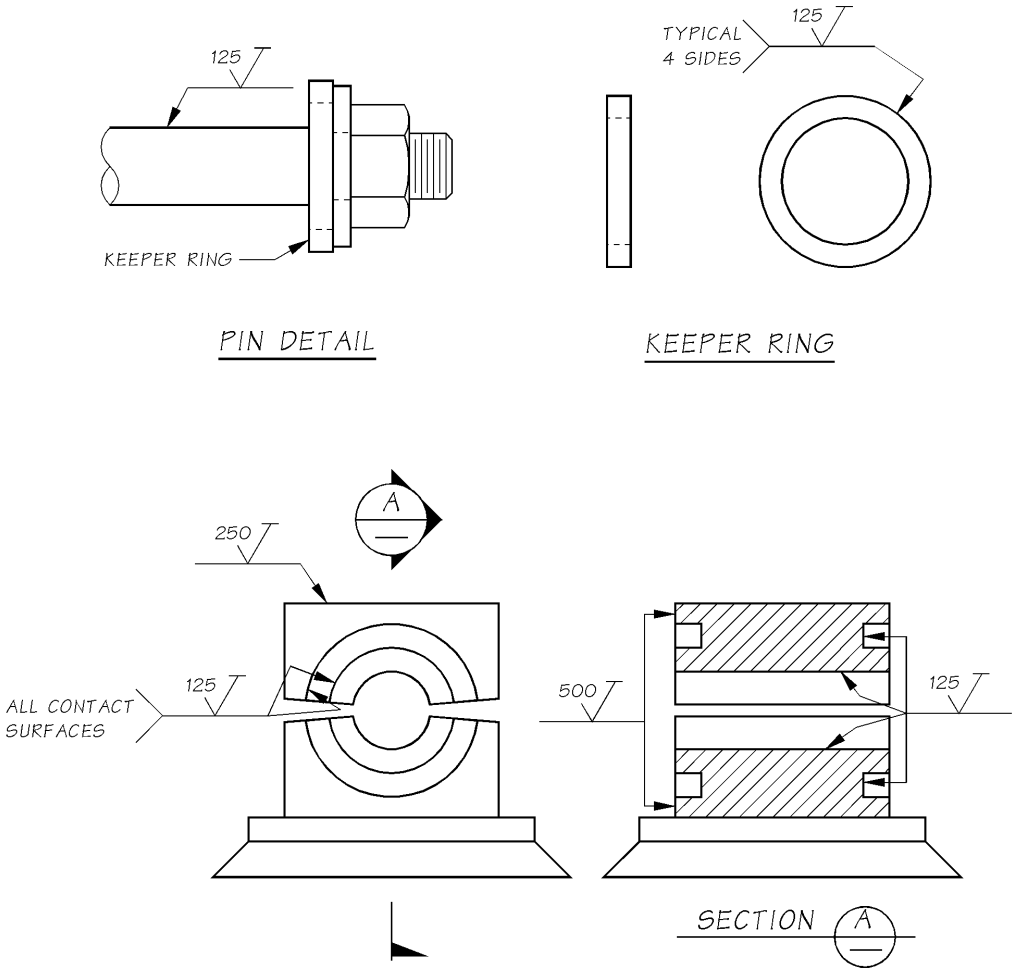

Surface Finish Examples
Figure 6.3.14-1

6.3.15 Welding

All structural steel and rebar welding shall be in accordance with the *Standard Specifications*, amendments thereto and the special provisions. The *Standard Specifications* currently calls for welding structural steel according to the AASHTO/AWS D1.5-2002 *Bridge Welding Code* (BWC) and the latest edition of the AWS D1.1 *Structural Weld Code*. The designers should be especially aware of current amendments to the following sections of the *Standard Specifications*, 6-03.3(25) Welding and Repair Welding and 6-03.3(25)A Welding Inspection.

Exceptions to both codes and additional requirements are shown in the *Standard Specifications* and the special provisions.

Standard symbols for welding, brazing, and nondestructive examination can be found in the ANSI/AWS A 2.4 by that name. This publication is a very good reference for definitions of abbreviations and acronyms related to welding.

The designer must consider the limits of allowable fatigue stress, specified for the various welds used to connect the main load carrying members of a steel structure. See LRFD article 6.6. Most plate girder framing can be detailed in a way that provides fatigue category C or better.

The minimum fillet weld size shall be as shown in the following table. Weld size is determined by the thicker of the two parts joined unless a larger size is required by calculated stress. The weld size need not exceed the thickness of the thinner part joined.

Base Metal Thickness of Thicker Part Joined	Minimum Size of Fillet Weld
To ¾" inclusive	¼"
Over ¾"	5/16"

In general, the maximum size fillet weld which may be made with a single pass is 5/16 inch for submerged arc (SAW), gas metal arc (GMAW), and flux-cored arc welding (FCAW) processes. The maximum size fillet weld made in a single pass is ¼ inch for the shielded metal arc welding (SMAW) process.

The major difference between AWS D1.1 and D1.5 is the welding process qualification. The only process deemed prequalified in D1.5 is shielded metal arc (SMAW). All others must be qualified by test. Qualification of AASHTO M 270 grade 50W (ASTM A709 grade 50W) in Section 5 of D1.5 qualifies the welding of all AASHTO approved steels with a minimum specified yield of 50 ksi or less. Bridge fabricators generally qualify to M 270 grade 50W (A709 grade 50W).

All bridge welding procedure specifications (WPS) submitted for approval shall be accompanied by a procedure qualification record (PQR), a record of test specimens examination and approval except for SMAW prequalified. Some handy reference aids in checking WPS in addition to PQR are:

Matching filler metal requirements are found in BWC Section 4.

Prequalified joints are found in BWC Section 2.

AWS electrode specifications and classifications are obtained from the structural steel specialist. Many electrode specification sheets may be found online.

Lincoln Electric Arc Welding Handbook.

Many of Lincoln Electric's published materials and literature are available through those designers and supervisors who have attended Lincoln Electric's weld design seminars.

WSDOT *Standard Specifications* for preheat and interpass temperatures.

Notes: Electrogas and electroslag welding processes are not allowed in WSDOT work. Narrow gap improved electroslag welding will be allowed on a case-by-case basis.

Often in the rehabilitation of existing steel structures, it is desirable to weld, in some form, to the in-place structural steel. Often it is not possible to determine from the original contract documents whether or not the existing steel contains high or low carbon content and carbon equivalence. Small coupons from the steel can be taken for a chemical analysis. Labs are available in the Seattle and Portland areas that will do this service quickly. Suitable weld procedures can be prepared once the chemical content is measured.

6.3.16 Shop Assembly

In most cases, a simple progressive longitudinal shop assembly is sufficient to ensure proper fit of subsections, field splices, and crossframe connections, etc., in the field. Due to geometric complexity of some structures, progressive transverse assembly, in combination with progressive longitudinal assembly may be desirable. The designer shall consult with the supervisor and the steel specialist to determine the extent of shop assembly and clarification of *Standard Specifications* Section 6-03.3(28) A. If other than line girder progressive assembly is required, the method must be included by special provision. High skews or curved girders should be done with some form of transverse and longitudinal assembly. Complex curved and skewed box girder framing should be done with full transverse progressive assembly. For transverse assembly, specify crossframe and pier diaphragm connections to be completed while assembled.

During shop assembly, girder segments are blocked or supported in the no-load condition (no gravity effects). Simple line girder assembly is often done in the horizontal position. The primary reason for shop assembly is to ensure correct alignment for girder field splices. For straight bridges, crossframe connections are normally done by numerically controlled (NC) drilling (no trial shop assembly). This is generally of sufficient accuracy to allow crossframe installation in the field without corrective action such as reaming.

For curved I-girders, crossframes are to be fabricated to fit the no-load condition. During field erection, girder segments will need to be adjusted or supported to make fit-up possible. This is not unreasonable since curved girders are not self-supporting before crossframes are in place. However, the method results in out-of-plumb girders. For most cases, making theoretical compensation to arrive at plumb in final condition is not justified.

Highly skewed girders present difficult fit-up conditions. Setting screeds is also complicated because of differential deflections between neighboring girders. Design of crossframes and pier diaphragms must take into account twist and rotations of webs during construction. Often, slotted holes for crossframe connections can be used to allow settlement without undue web distortion. This situation should be carefully studied by grid or finite element analysis to determine amount and type of movement anticipated during construction. Details should be consistent. Unlike curved girders rotating away from plumb at midspan, girder webs for skewed construction should be kept plumb at piers.

6.4 Plan Details

6.4.1 General

Detailing practice should follow industry standards. Designations for structural steel can be found in Table 2-1 of AISC *Detailing for Steel Construction*. Previous plans are a good reference for detailing practices. Detailing should also conform to national unified guidelines published by AASHTO/NSBA Steel Bridge Collaboration.

Details for plate girders are continually being revised or improved to keep up with changing fabrication practice, labor and material costs, and understanding of fatigue behavior. Uses and demands for steel girder bridges are also changing. Cost benefits for individual details vary from shop to shop and even from time to time. For these reasons, previous plan details can be guides but should not be considered standards. Options should be made available to accommodate all prospective fabricators. For example, small shops prefer shorter, lighter girder segments. Some shops are able to purchase and handle plates over 90 feet long. Large shop assembly may be prohibitive for fabricators without adequate space.

In general, office practice is to favor field bolted as opposed to field welded connections. In addition, members of cross frames are shop bolted to give some degree of field adjustment. Welded assemblies have little adjustment during erection.

6.4.2 Structural Steel Notes

Due to their dynamic nature, the structural steel notes are not shown in this manual. They are available as standards in the drafting system. Since each project has unique requirements, these notes should be edited accordingly. Material specifications are constantly changing. Separate sets of notes are available for I and box girders.

6.4.3 Framing Plan

The Framing Plan gives plan locations of girders, crossframes, and attachments. Show ties between the survey line, girder lines, backs of pavement seats, and centerlines of piers. Locate panel points (crossframe locations). Show general arrangement of bottom laterals. Provide geometry, bearing lines, and transverse intermediate stiffener locations. Show field splice locations. Map out different lateral connection details. See Appendix 6.4-A1.

6.4.4 Girder Elevation

The Girder Elevation is used to define flanges, webs, and their splice locations. Show shear connector spacing, location, and number across the flange. Locate transverse stiffeners and show where they are cut short of tension flanges. Show the tension regions of the girders for the purpose of ordering plate material, inspection methods (NDE), and *Bridge Welding Code* acceptance criteria. See Charpy V-notch testing requirements of the *Standard Specifications*. Identify tension welded butt splices for which radiographic examination (RT) is required. See *Standard Specifications 6-03.3(25)A*. V and X are also defined in the Structural Steel Notes. Permissible welded web splices should be shown, however, the optional welded web splice shown on the Girder Details sheet permits the fabricator to add splices subject to approval by the engineer. If there are fracture critical components, they must be clearly identified along with CVN call-outs. See Appendix 6.4-A2.

6.4.5 Typical Girder Details

One or two plan sheets should be devoted to showing typical details to be used throughout the girders. Such details include the weld details, various stiffener plates and weld connections, locations of optional web splices, and drip plate details. Include field splice details here if only one type of splice will suffice for the plans. An entire sheet may be required for bridges with multiple field splice designs. See Appendix 6.4-A3 and 6.4-A4. Note: Do not distinguish between field bolts and shop bolts. A solid bolt symbol will suffice.

Field splices for flanges should accommodate web location tolerance of ± ¼" per BWC 3.5.1.5. Allow a minimum of ¼" for out of position web plus ⅜" for fillet weld, or a total of ⅝" minimum clear between theoretical face of web and edge of splice plate. The bottom flange splice plate should be split to allow moisture to drain (use 4 equal bottom flange splice plates). The fill plate does not need to be split.

Vertical stiffeners used to connect crossframes are generally 8" wide to accommodate two bolt rows. They must be welded to top and bottom flanges to reduce out-of-plane bending of the web. Stiffeners are coped, clipped or cut short a distance between $4t_w$ and $6t_w$ to provide web flexibility, per LRFD article 6.10.11.1.1.

6.4.6 Crossframe Details

Show member sizes, geometrics (work lines and work points), and connection details. Actual lengths of members and dimensions of connections will be determined by the shop plan detailer. Details should incorporate actual conditions such as skew and neighboring members so that geometric conflicts can be avoided. Tee sections are preferred over double angles for easier painting. If double angles are used, leave a minimum of 1 inch between legs and include fillers as needed for stability. Do not detail crossframes that require piecemeal installation. They must be complete subassemblies for field installation. For highly loaded crossframes, such as at piers or between curved girders, consider symmetric sections with little or no eccentricity in the connections. Where possible, allow for repetitive use of crossframe geometrics, especially hole patterns in stiffener connections, regardless of superelevation transitions. See Appendix 6.4-A5.

Internal crossframes and top lateral systems for box girders are shop welded, primarily. All connection types should be closely examined for detail conflict and weld access. Clearance between deck forming and top lateral members must be considered.

6.4.7 Camber Diagram and Bearing Stiffener Rotation

Camber curves should be detailed using conventional practices. Dimensions should be given at tenth points. Dimensions may also be given at crossframe locations, which may be more useful in the field. In order to place bearing stiffeners in the vertical position after slab placement, it is necessary to show expected girder rotations at piers. See Appendix 6.4-A6.

Office practice is to show deflection camber only. Geometric camber for profile grade and superelevation will be calculated by the shop detailer from highway alignment shown on the Layout sheets.

6.4.8 Roadway Slab

New bridge decks for steel stringers shall use Deck Protection System 1. Currently, this is a minimum 7 ½" thickness deck, with 2 ½" concrete cover over epoxy coated top mat reinforcing. Allowance for future overlay is not required for this system.

The roadway slab is detailed in section and plan views. For continuous spans, add a section showing negative moment longitudinal reinforcing. If possible, continue the positive moment region reinforcing pattern from end-to-end of the slab with the negative moment region reinforcing superimposed on it. The plan views should detail typical reinforcing and cutoff locations for negative moment steel. Avoid termination of all negative moment steel at one location. See Appendix 6.4-A7 and 6.4-A8.

The "pad" dimension for steel girders is treated somewhat differently than for prestressed girders. The pad dimension is assumed to be constant throughout the span length. Ideally, the girder is cambered to compensate for dead loads and vertical curves. However, fabrication and erection tolerances result in considerable deviation from theoretical elevations. The pad dimension is therefore considered only a nominal value and is adjusted as needed along the span once the steel has been erected and profiled. The screed for the slab is to be set to produce correct roadway profile. The plans should reference this procedure contained in *Standard Specification* 6-03.3(39). The pad dimension is to be noted as nominal. As a general rule of thumb, use 11" for short span bridges (spans less than 150'), 12" for short to medium span bridges (150′ to 180′), 13" for medium spans (180′ to 220′) and 14" to 15" for long spans (over 220′). These figures are only approximate. Use good engineering judgment when detailing this dimension.

6.4.9 Handrail Details and Inspection Access

If required, include handrails with typical girder details. Locations may be adjusted to avoid conflicts with other details such as large gusset plates. Handrail use shall be coordinated with the Bridge Preservation Office. Often, handrails are not needed if access to all details is possible from under bridge inspection trucks (UBIT's). Also, easy public access to girder ends and handrails may represent a nuisance. Examine the bridge and site to determine the need for handrails. Fences may be required to deny public access.

Box girders require special consideration for inspection access. Access holes or hatches shall be detailed to exclude birds and the public. They shall be positioned where ladders, as a minimum, are required to gain access. Openings through girder ends are preferred if space behind end walls permits. Bottom flange hatches are difficult to operate. Hatches through webs may reduce shear capacity but are easier to use. Pier diaphragms will require openings for easy passage. To facilitate inspection, interior paint should be light color; white is preferred. Electric lighting and outlets are also required for inspection and maintenance. One-way inspection of all interior spaces should be made possible by round trip in adjoining girders. This requires some form of walkway between boxes and hatch operation from both sides. If locks are needed, they must be keyed to one master. Air vents shall be placed along girder webs to allow fresh air to circulate. Refer to previous projects for details.

6.4.10 Box Girder Details

A few details unique to box girders will be presented here. Office practice has been to include a top lateral system in each box, full length of a girder. There is a possibility of reducing some bays of the top laterals in straight girders without sacrificing safety during construction. However, most WSDOT box girders are built to some level of curvature, and the practice of using a full length top lateral system should be adhered to unless a careful stability analysis is undertaken. In the past, the top lateral system was detailed with 6" to 8" clearance between lateral work line and bottom of top flange. The intent was to provide adequate clearance for removable deck forming. This requires the introduction of gusset connecting plates with potentially poor fatigue behavior if welded to the web.

A cleaner method of attaching the top laterals is by bolting directly to the top flange or intermediate bolted gusset plate (in which case, the lateral members may be welded to the gusset plate). The flange bolting pattern should be detailed to minimize loss of critical material, especially at interior supports. In order to maximize the clearance for deck forms, all lateral connections should progress down from the bottom surface of the top flange. The haunch distance between top of web and deck soffit should be 6”or greater to allow deck forming to clear top lateral members. Supplemental blocking will be required to support deck forms on the typical waler system. See example top lateral details Appendix 6.4-A11.

Ideal girder construction allows full length web and flange plates to be continuously welded without interruption of the welder. This process is routinely accomplished with I-girder shapes, where web stiffeners are attached after top and bottom flanges are welded to the web. With box girders, however, due to handling constraints, most fabrication shops need to progress from top flange-to-web welding, welding stiffeners to webs, and then welding the top flange plus web assemblies to the bottom flange. This introduces a start and stop position at each web stiffener, unless enough clearance is provided the welder. To achieve this, the stiffener should be held back and attached to the bottom flange by a member brought in after the bottom longitudinal welds are complete. See detail Appendix 6.4-A11.

Small tractor mounted welders are able to run a continuous pass on the bottom external weld, provided there is adequate shelf width. The standard offset between center of web and edge of bottom flange is now 2”. In the past, this weld was primarily performed by hand.

The most significant design difference between I-girders and box girders occur in bottom flange compression regions. Using thicker material to provide stability is not usually economical, given the typically wide unsupported flange widths. The standard practice has been to stiffen relatively thin compression plates with a system of longitudinal and transverse stiffeners. WSDOT practice is to use tee shapes, either singly or in pairs for the wider plates. Ideally, the stiffeners are terminated at bolted field splices. If the stiffener is terminated in a region of live load tension cycles, careful attention needs to be paid to design fatigue stresses and the termination detail. See details Appendix 6.4-A13.

Inspection access must be provided to each box girder. If possible locate hatches in girder webs at abutments. Webs can be thickened to compensate for section loss. Provide for round trip access and penetrations at all intermediate diaphragms. Access for removing deck formwork must be planned for. Typically, block-outs in the deck large enough to remove full size plywood are detailed. Block-outs require careful rebar splicing or coupling for good long term performance.

Box girders shall have electrical, illumination, and ventilation details for the aid of inspection and maintenance. Drain holes shall be installed at all low points.

Geometrics for boxes are referenced to a single workline, unless box width tapers. The box cross section remains tied to a centerline intersecting this workline and normal to the roadway deck. The section rotates with superelevation transition rather than warping. See box girder geometrics and proportions Appendix 6.4-A10.

Box girders shall be supported by single centralized bearings when two or more boxes make up the bridge section. This requires diaphragms between boxes for bracing. See pier diaphragm details Appendix 6.4-A12.

6.5 Shop Plan Review

Shop plans shall be checked for agreement with the Contract Plans, *Standard Specifications*, and the Special Provisions. The review procedure is described in Section 1.3.5 of this manual. Material specifications shall be checked along with plate sizes.

Welding procedure specifications (WPS) and procedure qualification records (PQR) shall be submitted with shop plans. If not, they shall be requested and received before shop plans are approved.

Most shop plans may be stamped:

> "GEOMETRY NOT REVIEWED BY THE BRIDGE & STRUCTURES OFFICE"

However, the reviewer should verify that lengths, radii, and sizes shown on shop plans are in general agreement with the contract. The effects of profile grade and camber would make exact verification difficult. Some differences in lengths, between top and bottom flange plates for example, are to be expected.

The procedures to follow in the event changes are required or requested by the fabricator can be found in Section 1.3.6 of this manual. In the past, shop plans with acceptable changes have been so noted and stamped:

> "STRUCTURALLY ACCEPTABLE, BUT DOES NOT CONFORM TO THE CONTRACT REQUIREMENTS"

6.99 References

The following publications can provide general guidance for the design of steel structures. Some of this material may be dated and its application should be used with caution.

1. *Highway Structures Design Handbook, Volumes I and II* by AISC Marketing, Inc., formerly by US Steel

   This is a detailed design reference for "I" girders and box girders, both straight and curved, utilizing either service load design or load factor design. This reference has good background on steel bridge details, and how to use them. Although calculations have not been updated for LRFD, the general theory is still valuable. Many shortcuts for design or modeling are presented, such as converting lateral systems into idealized thin plates, and the V load method to approximate curved I girder behavior.

2. *Composite Steel Plate Girder Superstructures,* by US Steel

   Example tables and charts for complete plate girders, standardized for 34 and 44 ft. roadways and HS-20 loading. Many span arrangements and lengths are presented.

3. *Four LRFD Design Examples of Steel Highway Bridges, Vol. II, Chapter 1B Highway Structures Design Handbook,* by AISI and NSBA

4. *Steel Structures, Design and Behavior* by Salmon and Johnson

   A textbook for steel design, formatted to AISC LRFD method. This is a good reference for structural behavior of steel members or components, in detail that is not practical for codes or other manuals.

5. *Design of Welded Structures* by Omer H. Blodgett.

   This publication is quite helpful in the calculation of section properties and the design of individual members. There are sections on bridge girders and many other welded structures. The basics of torsion analysis are included.

6. *Guide to Stability Design Criteria for Metal Structures,* by Theodore V. Galambos

7. *Curved Girder Workshop* produced by the Federal Highway Administration.

   This publication is helpful in the design of curved "I" girders and box girders with explanation of the associated lateral flange bending, torsional, and warping stresses. Approximate analysis techniques are provided.

8. *A Fatigue Primer for Structural Engineers*, by John Fisher, Geoffrey L Kulak, and Ian F. C. Smith

9. *Steel Construction Manual, Thirteenth Edition,* by American Institute of Steel Construction

   The essential reference for rolled shape properties, design tables, and specifications governing steel design and construction.

10. *Machinery's Handbook,* by Industrial Press

    A reference book for the machine shop practice; handy for thread types, machine tolerances and fits, spring design, etc.

11. *Painting of Steel Bridges and Other Structures*, by Clive H. Hare

    This is a good reference for paint systems, surface preparation, and relative costs, for both bare and previously painted steel. Explanations of how each paint system works, and comparisons of each on the basis of performance and cost are provided.

12. NCHRP Report 314, *Guidelines for the Use of Weathering Steel in Bridges*

    This reference contains detailing information if weathering steel will be used. Protection of concrete surfaces from staining and techniques for providing uniform appearance is provided.

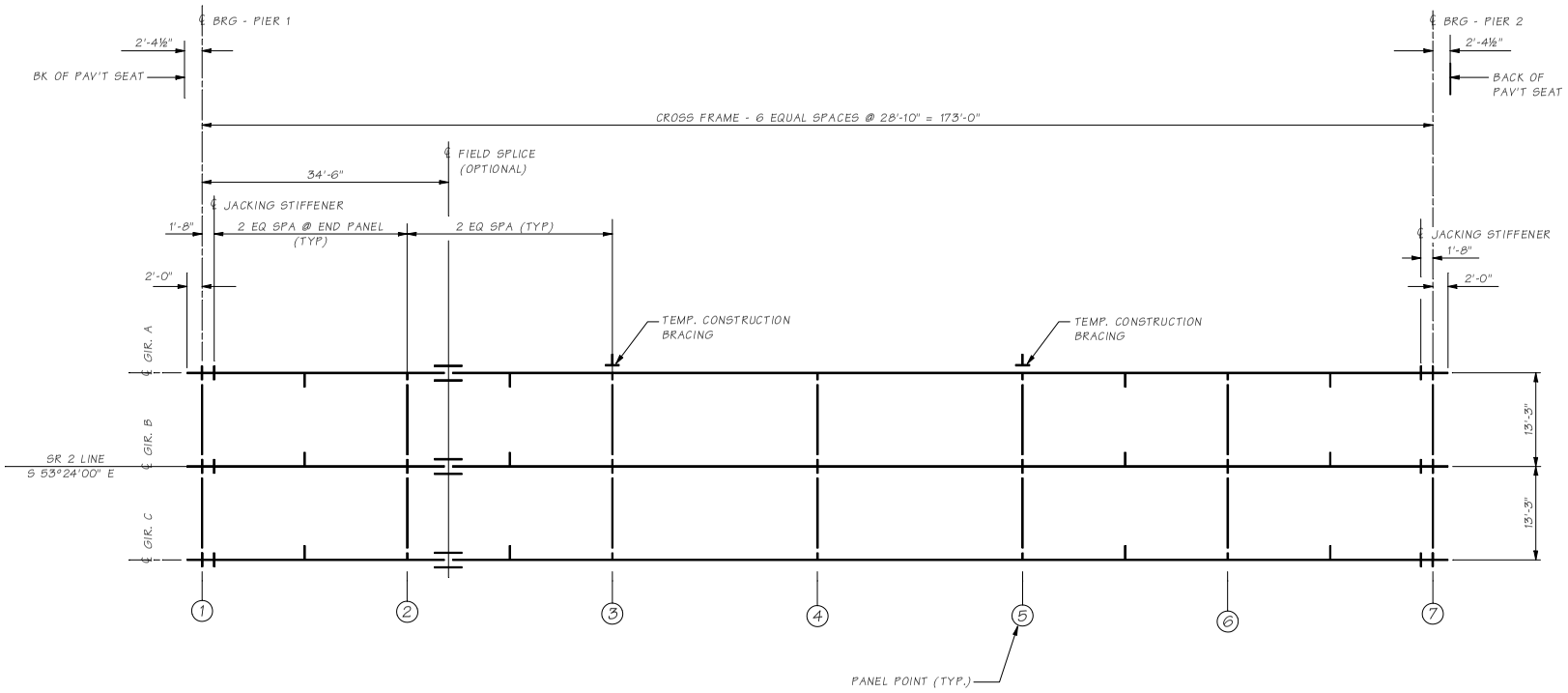

FRAMING PLAN

Bridge Design Engr.					REGION NO.	STATE	FED. AID PROJ. NO.	SHEET NO.	TOTAL SHEETS	BRIDGE AND STRUCTURES OFFICE
Supervisor					10	WASH.				Washington State Department of Transportation
Designed By					JOB NUMBER					
Checked By										FRAMING PLAN
Detailed By										
Bridge Projects Engr.										
Prelim Plan By										
Architect/Specialist	DATE	REVISION	BY	APPD						

BRIDGE SHEET NO. SHEET OF SHEETS

SR JOB NO. SHEET

6.4-A1

Wed Apr 26 07:27:25 2006

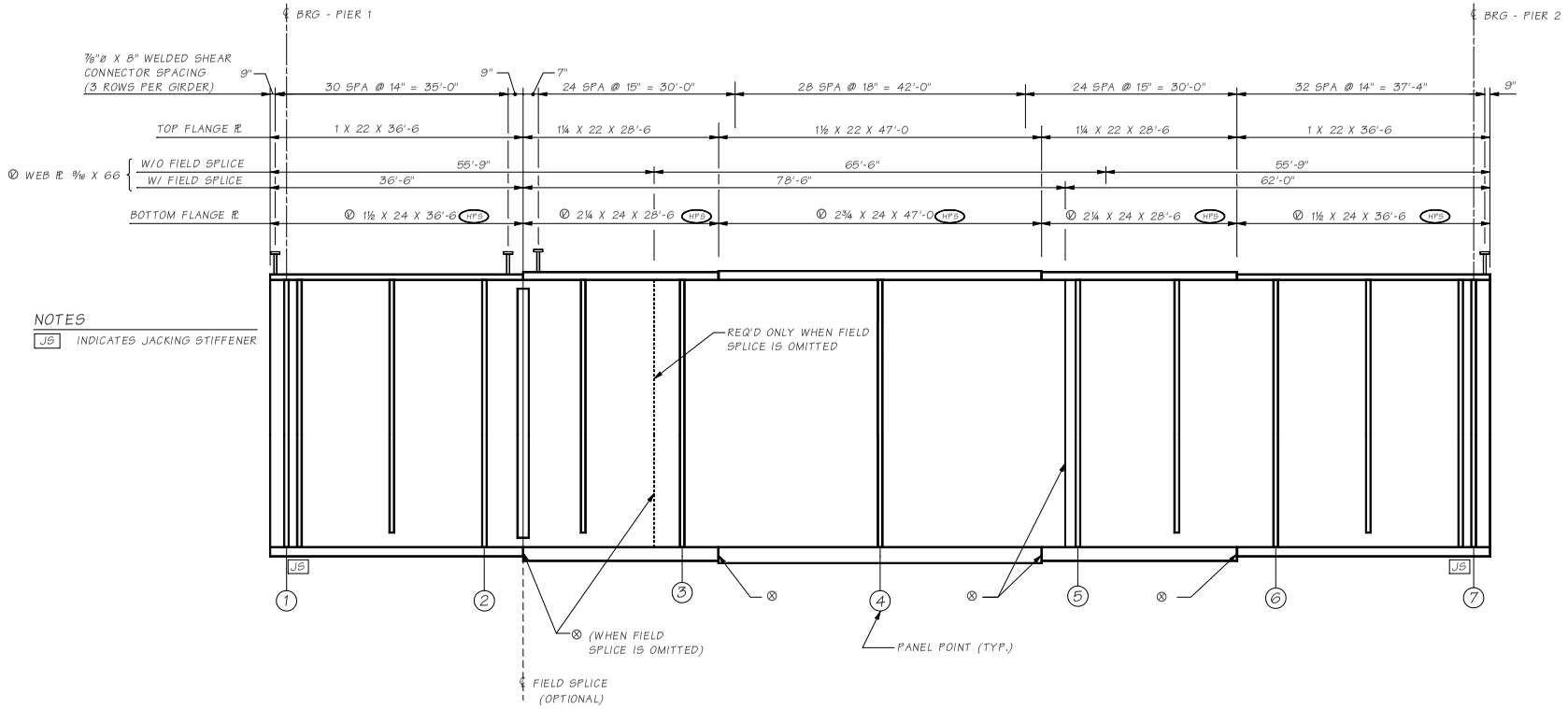

GIRDER ELEVATION

Bridge Design Engr.	M:\BRIDGELIB\BDM\Chapter 6\Window files\S64-A2.WND				REGION NO.	STATE	FED. AID PROJ. NO.	SHEET NO.	TOTAL SHEETS	BRIDGE AND STRUCTURES OFFICE
Supervisor					10	WASH.				Washington State Department of Transportation
Designed By					JOB NUMBER					GIRDER ELEVATION
Checked By										BRIDGE SHEET NO.
Detailed By										SHEET OF SHEETS
Bridge Projects Engr.										
Prelim Plan By										
Architect/Specialist	DATE	REVISION	BY	APP'D						

SR JOB NO. SHEET

6.4-A2

Wed Apr 26 07:31:54 2006

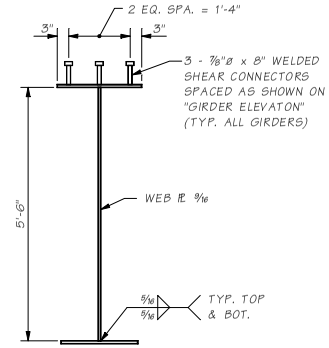

TYPICAL GIRDER SECTION

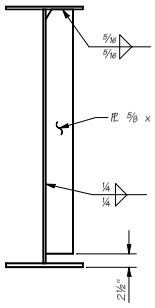

TYPICAL STIFFENER BETWEEN X-FRAMES

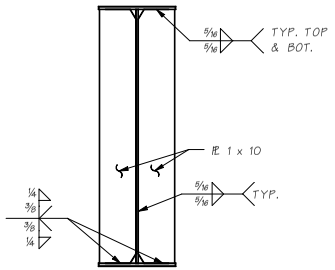

PIERS 1 & 2

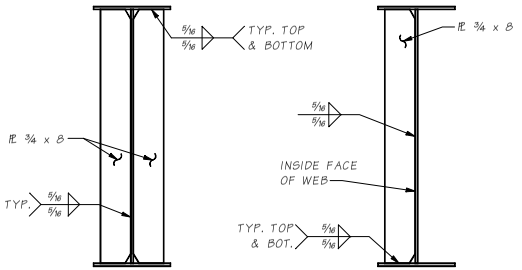

INTERIOR GIRDERS

EXTERIOR GIRDERS

TYPICAL STIFFENER AT INTERMEDIATE X-FRAME

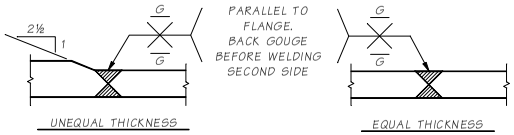

TENSION OR COMPRESSION FLANGE SPLICE

WELDED GIRDER SPLICE DETAILS

FABRICATOR MAY SUBSTITUTE B-L2C-S FOR B-U3C-S, SUBJECT TO THICKNESS LIMITATIONS.

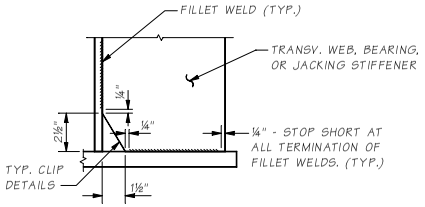

TYPICAL FILLET WELD TERMINATION DETAIL

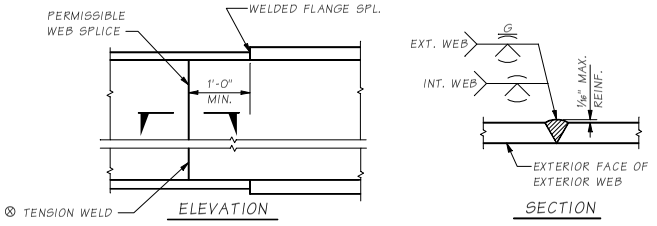

PERMISSIBLE WEB SPLICE

Bridge Design Engr.	M:\BRIDGELIB\BDM\Chapter 6\Window files\S64-A3.WND				REGION NO.	STATE	FED. AID PROJ. NO.	SHEET NO.	TOTAL SHEETS
Supervisor					10	WASH.			
Designed By					JOB NUMBER				
Checked By									
Detailed By									
Bridge Projects Engr.									
Prelim. Plan By									
Architect/Specialist	DATE	REVISION	BY	APPD					

BRIDGE AND STRUCTURES OFFICE

Washington State Department of Transportation

GIRDER DETAILS

BRIDGE SHEET NO.
SHEET OF SHEETS

SR JOB NO. SHEET
6.4-A3

Wed Apr 26 07:31:49 2006

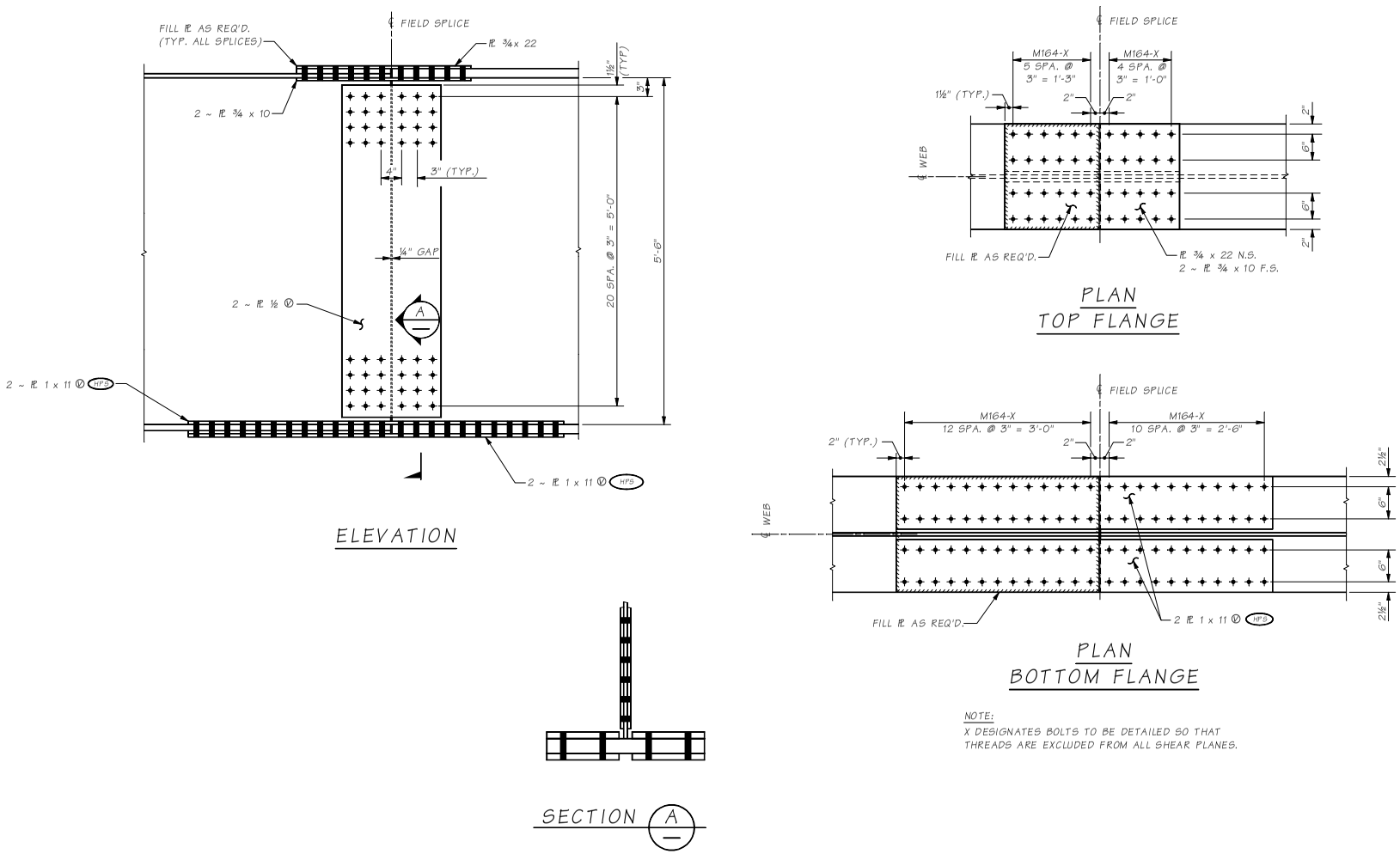

Bridge Design Engr.	M:\BRIDGELIB\BDM\Chapter 6\window files\S64-A5.wnd				REGION NO.	STATE	FED. AID PROJ. NO.	SHEET NO.	TOTAL SHEETS
Supervisor					10	WASH.			
Designed By									
Checked By					JOB NUMBER				
Detailed By									
Bridge Projects Engr.									
Prelim. Plan By									
Architect/Specialist	DATE	REVISION	BY	APP'D					

BRIDGE
AND
STRUCTURES
OFFICE

Washington State
Department of Transportation

STEEL PLATE GIRDER
FIELD SPLICE

BRIDGE SHEET NO.
SHEET
OF
SHEETS

Thu Jul 27 11:01:25 2006

SR JOB NO. SHEET

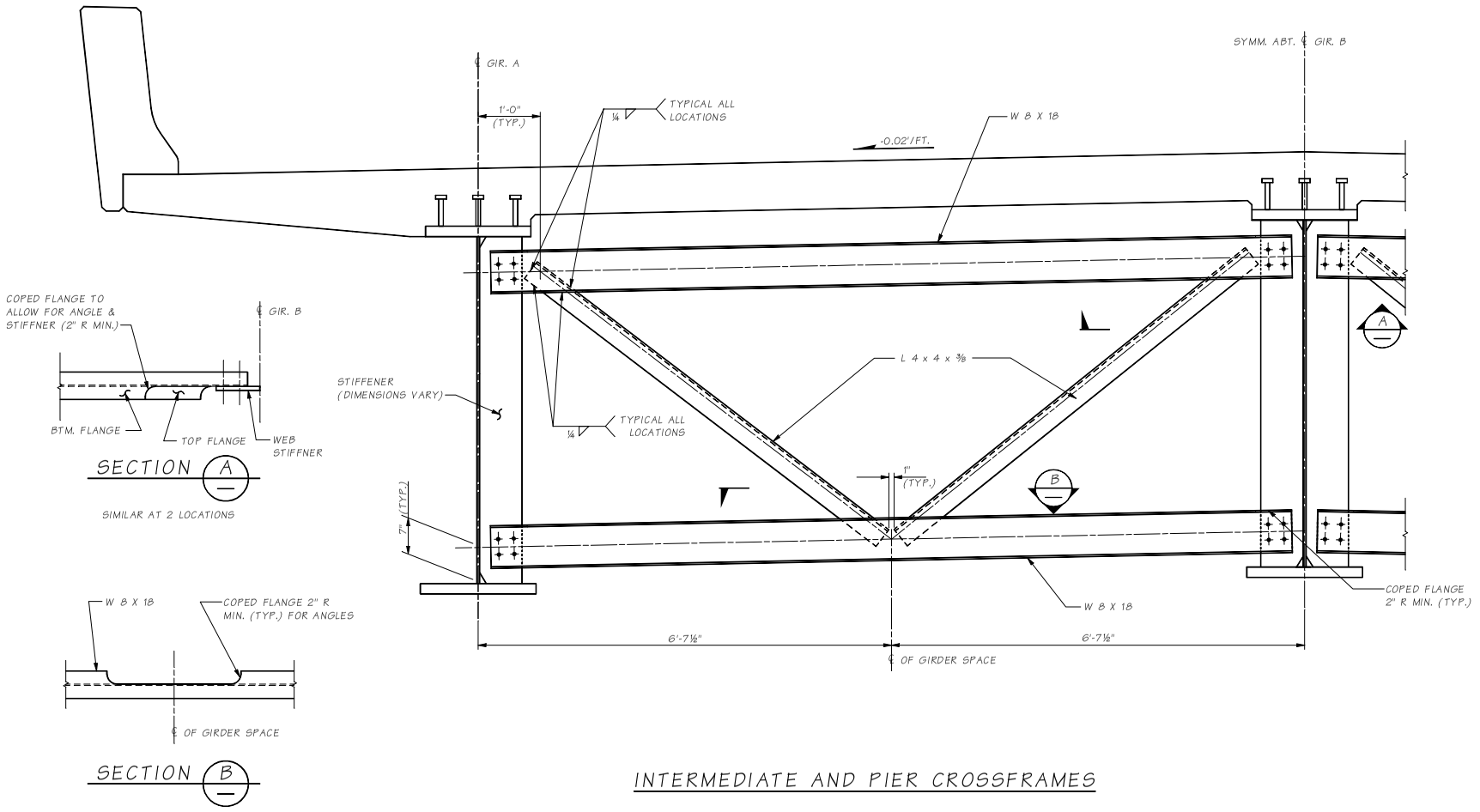

INTERMEDIATE AND PIER CROSSFRAMES

Bridge Design Engr.	M:\BRIDGELIB\BDM\Chapter 6\window files\S64-A6.wnd				REGION NO.	STATE	FED. AID PROJ. NO.	SHEET NO.	TOTAL SHEETS
Supervisor					10	WASH.			
Designed By					JOB NUMBER				
Checked By									
Detailed By									
Bridge Projects Engr.									
Prelim. Plan By									
Architect/Specialist	DATE	REVISION	BY	APP'D					

Thu Jul 27 11:00:14 2006

BRIDGE AND STRUCTURES OFFICE

Washington State Department of Transportation

STEEL PLATE GIRDER CROSSFRAMES

BRIDGE SHEET NO. / SHEET / OF / SHEETS

JOB NO. ____ SHEET ____

SR

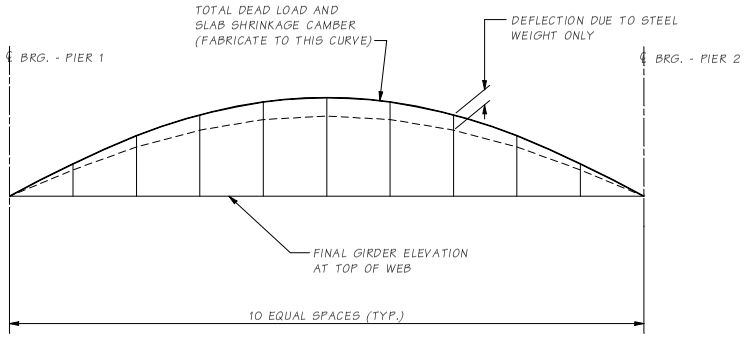

	TENTH POINTS									PANEL POINTS						
	0.1	0.2	0.3	0.4	0.5	0.6	0.7	0.8	0.9	1	2	3	4	5	6	7
TOTAL DEAD LOAD/SLAB SHRINKAGE CAMBER (IN.)	5⅜	9⅞	13⅛	15⅛	16	15⅛	13⅛	9⅞	5⅜	0	8½	14	16	14	8½	0
CAMBER DUE TO SELF WEIGHT OF STEEL (IN.)	1	2	2½	3	3⅛	3	2½	2	1	0	1⅝	2¾	3⅛	2¾	1⅝	0

DEAD LOAD CAMBER DIAGRAM

EFFECTS OF PROFILE GRADE ARE NOT SHOWN. FOR THE PURPOSE OF MEASURING CAMBER TOLERANCES AT THE TIME OF SHOP ASSEMBLY, GIRDER TOP FLANGES ARE EMBEDDED IN CONCRETE WITHOUT A DESIGNED HAUNCH.

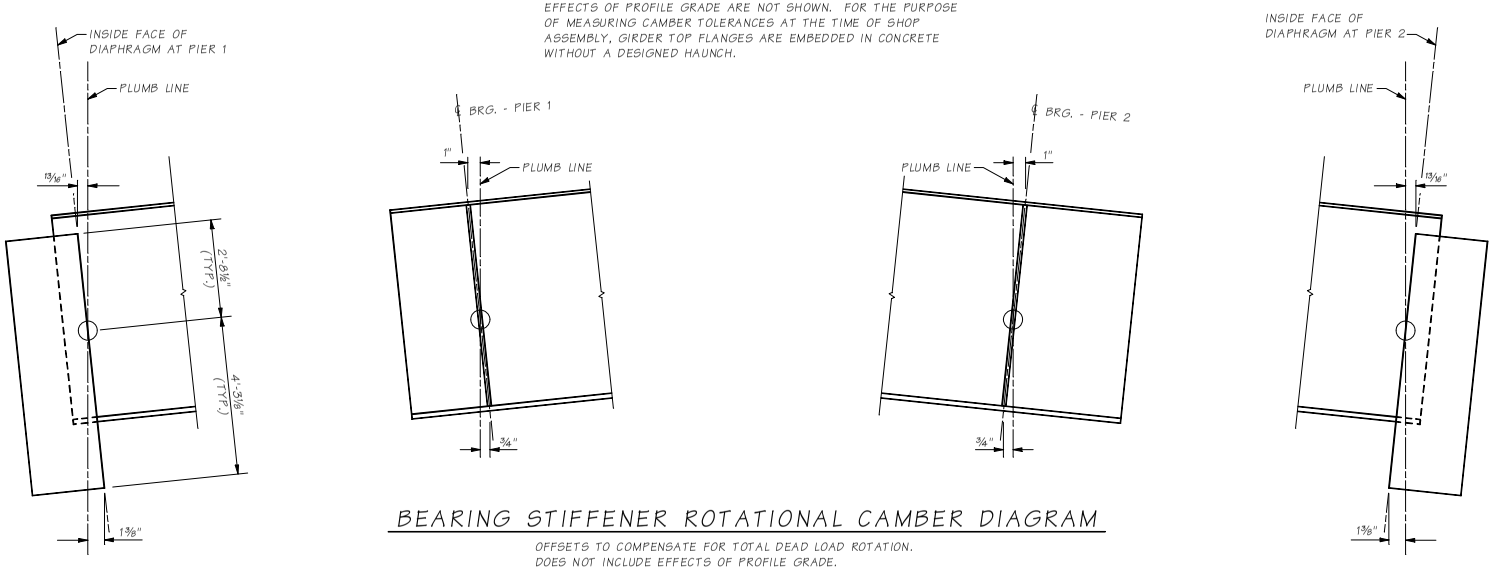

BEARING STIFFENER ROTATIONAL CAMBER DIAGRAM

OFFSETS TO COMPENSATE FOR TOTAL DEAD LOAD ROTATION. DOES NOT INCLUDE EFFECTS OF PROFILE GRADE.

Bridge Design Engr.	M:\BRIDGELIB\BDM\Chapter 6\window files\S64-A7.wnd				REGION NO.	STATE	FED. AID PROJ. NO.	SHEET NO.	TOTAL SHEETS	BRIDGE AND STRUCTURES OFFICE	Washington State Department of Transportation		BRIDGE SHEET NO.
Supervisor					10	WASH.							
Designed By					JOB NUMBER							STEEL PLATE GIRDER CAMBER DIAGRAM	SHEET OF SHEETS
Checked By													
Detailed By													
Bridge Projects Engr.													
Prelim. Plan By													
Architect/Specialist	DATE	REVISION	BY	APPD									

SR ___ JOB NO. ___ SHEET ___

6.4-A6

Thu Jul 27 10:59:09 2006

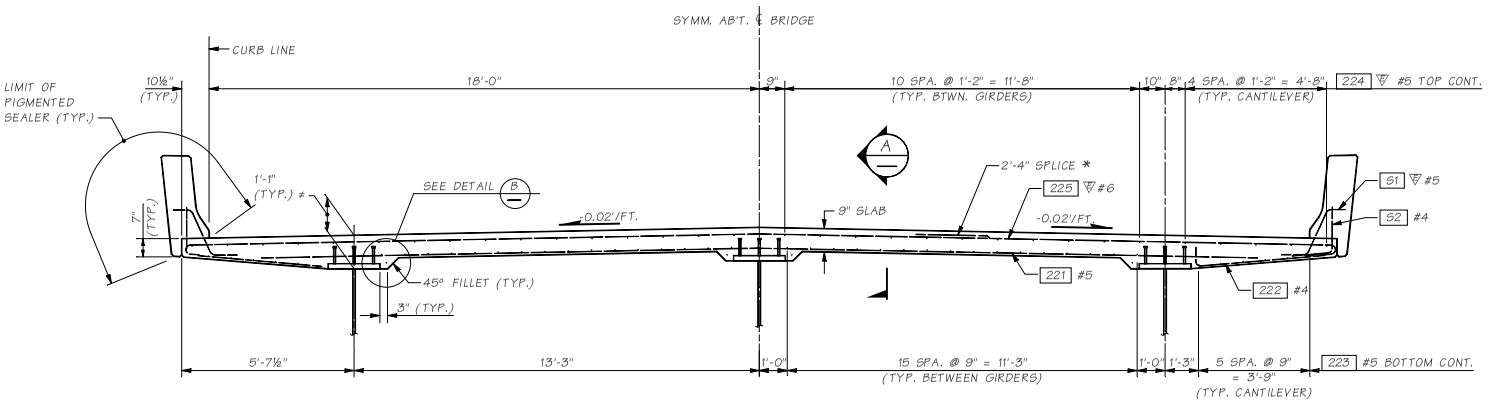

TYPICAL ROADWAY SECTION

* POSITION SPLICE MIDWAY BETWEEN GIRDERS. STAGGER SPLICES ABOUT ℄ BRIDGE, EVERY OTHER BAR. ROTATE HOOKS AS REQUIRED TO PROVIDE MINIMUM CONCRETE COVER.

≠ DIMENSIONS MAY VARY: REFER TO STD. SPEC. 6-03.3(39).

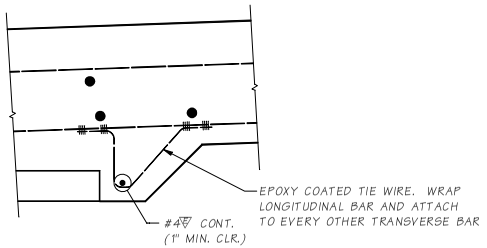

DETAIL B
TYPICAL EACH FILLET

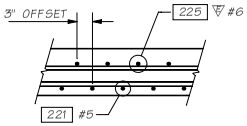

SECTION A

Bridge Design Engr.									
Supervisor									
Designed By									
Checked By									
Detailed By									
Bridge Projects Engr.									
Prelim. Plan By									
Architect/Specialist	DATE	REVISION	BY	APP'D					

REGION NO.	STATE	FED. AID PROJ. NO.	SHEET NO.	TOTAL SHEETS
10	WASH.			
JOB NUMBER				

BRIDGE AND STRUCTURES OFFICE

Washington State Department of Transportation

STEEL PLATE GIRDER ROADWAY SECTION

BRIDGE SHEET NO. | SHEET | OF | SHEETS

SR ____ JOB NO. ____ SHEET

6.4-A7

Thu Jul 27 10:57:29 2006

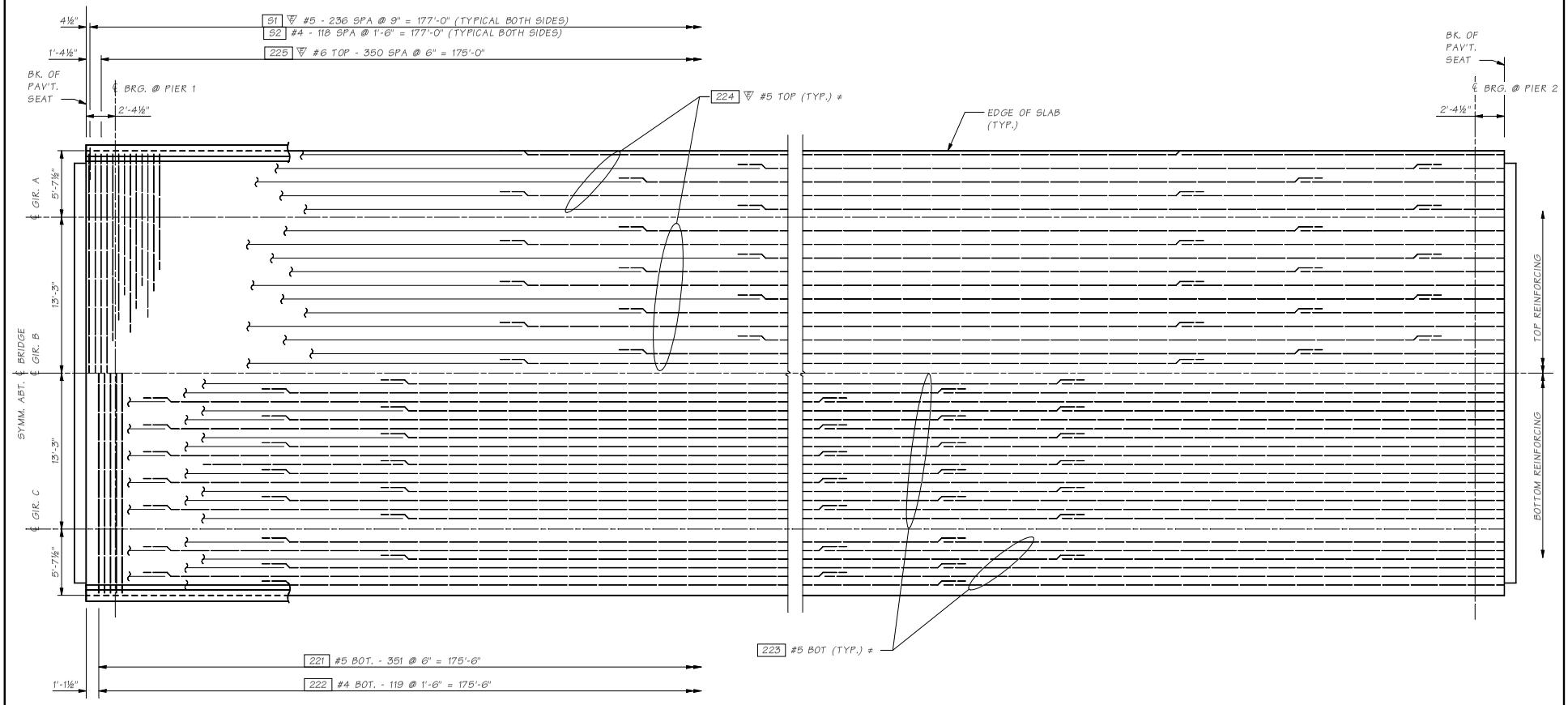

ROADWAY SLAB REINFORCING

NOTE:
2'-0" MINIMUM REBAR LAP SPLICE LENGTH FOR ALL LONGITUDINAL BARS.

≠ LOCATION OF REBAR SPLICES AT CONTRACTORS OPTION, EXCEPT ALL SPLICES SHALL BE ALTERNATED, SO NO MORE THAN 50% OF REBAR IS SPLICED AT THE SAME LOCATION, NORMAL TO ℄ OF BRIDGE.

SR JOB NO. SHEET

Bridge Design Engr.					REGION NO.	STATE	FED. AID PROJ. NO.	SHEET NO.	TOTAL SHEETS
Supervisor					10	WASH.			
Designed By									
Checked By					JOB NUMBER				
Detailed By									
Bridge Projects Engr.									
Prelim Plan By									
Architect/Specialist	DATE	REVISION	BY	APP'D					

BRIDGE AND STRUCTURES OFFICE

Washington State Department of Transportation

STEEL PLATE GIRDER SLAB PLAN

BRIDGE SHEET NO.
SHEET OF SHEETS

Thu Jul 27 10:42:52 2006

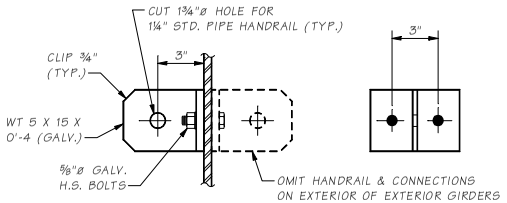

CLIP DETAIL

USE CLIP DETAIL(S) BETWEEN WEB STIFFENERS TO PROVIDE SUPPORT AT 8'-0" MAXIMUM SPACING.

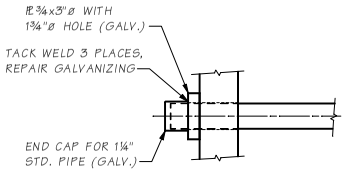

END CONNECTION DETAIL

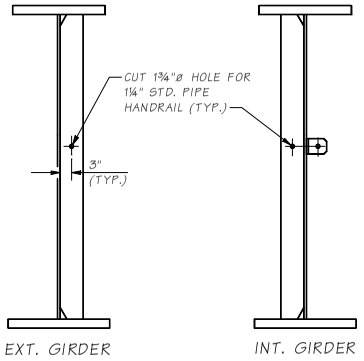

SECTION A

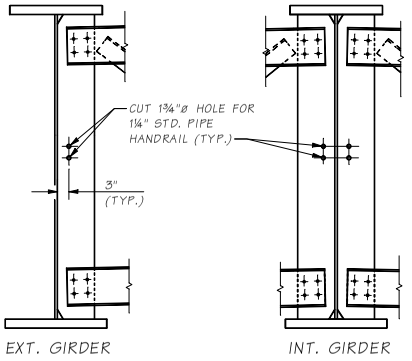

SECTION B

NOTES:

1. THE HANDRAIL SHALL BE 1¼" STD PIPE, ASTM A53 GR. B. ALL HARDWARE SHALL BE HOT DIPPED GALVANIZED.
2. THE INTERMEDIATE CLIPS SHALL BE ASTM A 36 OR A 992, GALVANIZED AFTER FABRICATION. HIGH STRENGTH BOLTS SHALL BE ASTM A 325, GALVANIZED. NUTS SHALL BE HEAVY HEX ASTM A 593 GRADE DH.
3. FASTEN TO BRIDGE AFTER GIRDERS ARE SHOP PAINTED. OVERSPRAY FROM FIELD PAINTING IS PERMITTED.
4. HANDRAIL IS DESIGNED TO BE USED WITH SHORT LENGTH, FIXED LANYARDS. DESIGN LOADING IS 200 LB VERTICAL AND HORIZONTAL, ACTING CONCURRENTLY. ONLY ONE PERSON IS PERMITTED TO ATTACH WITHIN EACH 8 FOOT BAY.

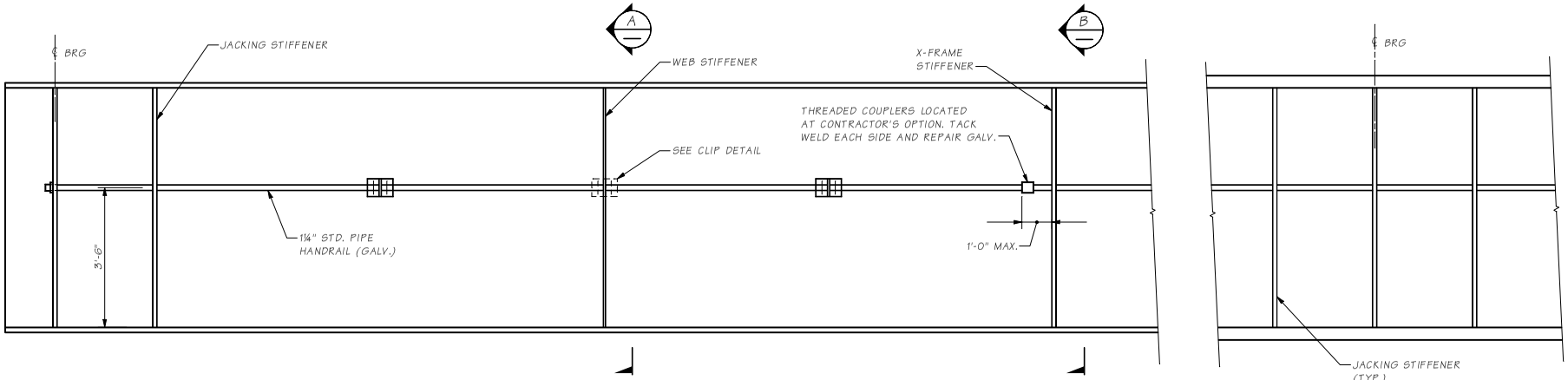

ELEVATION
GIRDER WITH HANDRAIL

Bridge Design Engr.	M:\BRIDGELIB\BDM\Chapter 6\Window files\S64-A9.WND				REGION NO.	STATE	FED. AID PROJ. NO.	SHEET NO.	TOTAL SHEETS	BRIDGE AND STRUCTURES OFFICE
Supervisor					10	WASH.				Washington State Department of Transportation
Designed By					JOB NUMBER					HANDRAIL
Checked By										
Detailed By										
Bridge Projects Engr.										
Prelim. Plan By										
Architect/Specialist	DATE	REVISION	BY	APP'D						

BRIDGE SHEET NO. SHEET OF SHEETS

SR. JOB NO. SHEET 6.4-A9

Wed Apr 26 07:31:18 2006

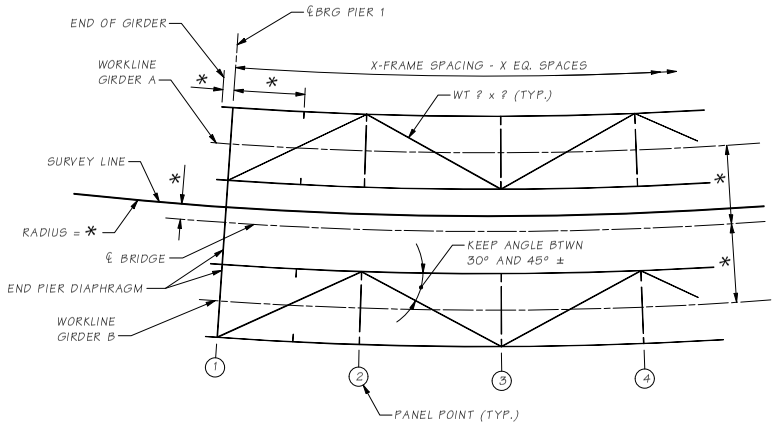

EXAMPLE - PARTIAL FRAMING PLAN

* PROVIDE PROJECT DIMENSIONS AND SPECIFY HOW MEASURED

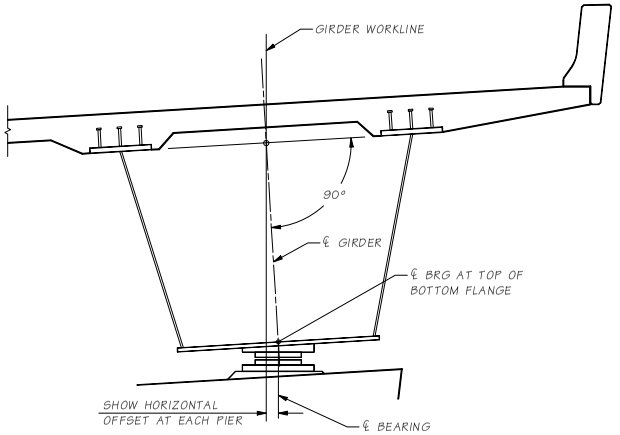

BEARING OFFSET DETAIL

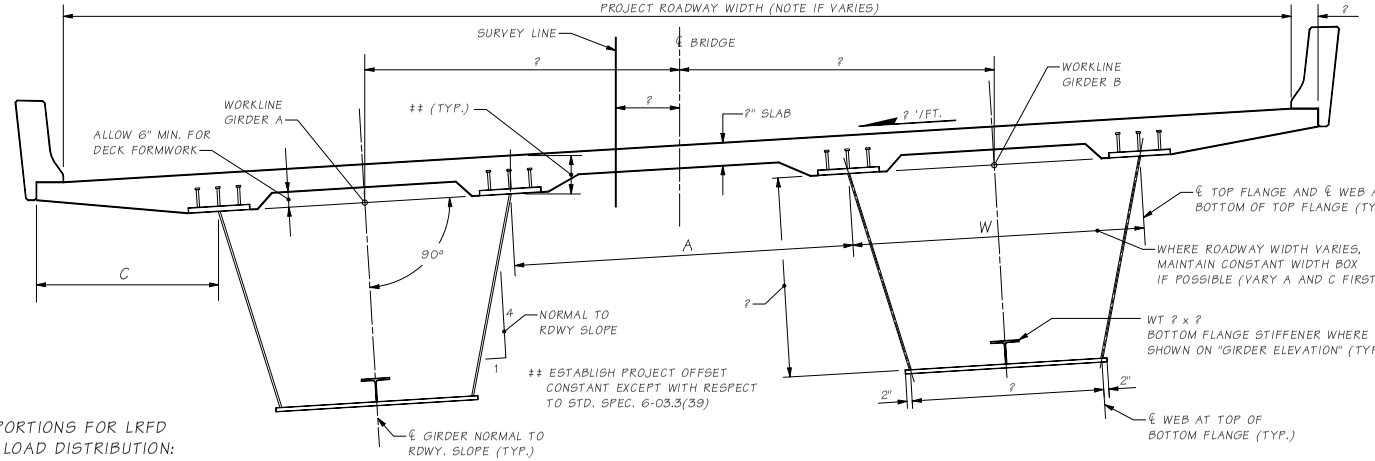

PROPORTIONS FOR LRFD LIVE LOAD DISTRIBUTION:

$C \leq 0.6W$ &
$C \leq 6$ FT.
$A = 0.8W$ TO $1.2W$

TYPICAL BOX GIRDER GEOMETRICS

NOTE: ALL DIMENSIONS CONTROLLING DECK AND BOX LOCATIONS ARE TO BE MEASURED HORIZONTALLY AND VERTICALLY, IN REFERENCE TO ALL ROADWAY GEOMETRIC DATA. THE BOX GEOMETRICS SHOULD REMAIN CONSTANT AND TIED TO THE GIRDER WORKLINE AS SHOWN ABOVE.

BOX GIRDER DETAIL NOTES:

DETAILS PROVIDED HEREIN ARE EXAMPLES ONLY AND REQUIRE PROJECT SPECIFIC ATTENTION TO DESIGN AND DETAILING. THAT IS, THEY ARE NOT INTENDED TO BE USED AS CONTRACT PLAN STANDARDS.

CERTAIN GEOMETRIC PRACTICES SHOULD NOT BE MODIFIED WITHOUT CONSULTING BRIDGE FABRICATORS. THESE DETAILS ARE A PARTIAL COMPILATION OF INDUSTRY EFFORTS TO STANDARDIZE BOX GIRDER FABRICATION AND SHOP PLAN PREPARATION.

BOX GIRDER DEPTH SHOULD NOT BE LESS THAN 5'-0", THE PREFERRED MINIMUM DEPTH IS 6'-6".

ALL GIRDERS MUST INCLUDE PROVISIONS FOR INSPECTION ACCESS AND VENTILATION, INCLUDING LIGHTING AND POWER.

PROVISION FOR REMOVING DECK FORMS MUST BE DETAILED IN THE PLANS. A MINIMUM 4'-0" X 4'-0" OPENING, ACCESSIBLE FROM EACH CELL IS NEEDED.

Bridge Design Engr.	M:\BRIDGELIB\BDM\Chapter 6\box girder details.MAN				REGION NO.	STATE	FED. AID PROJ. NO.	SHEET NO.	TOTAL SHEETS	BRIDGE AND STRUCTURES OFFICE
Supervisor					10	WASH.				Washington State Department of Transportation
Designed By										
Checked By					JOB NUMBER					BOX GIRDER GEOMETRICS AND PROPORTIONS
Detailed By										BRIDGE SHEET NO.
Bridge Projects Engr.										SHEET
Prelim. Plan By										OF
Architect/Specialist	DATE	REVISION	BY	APPD						SHEETS

SR JOB NO. SHEET

6.4-A10

Fri Feb 08 14:20:32 2008

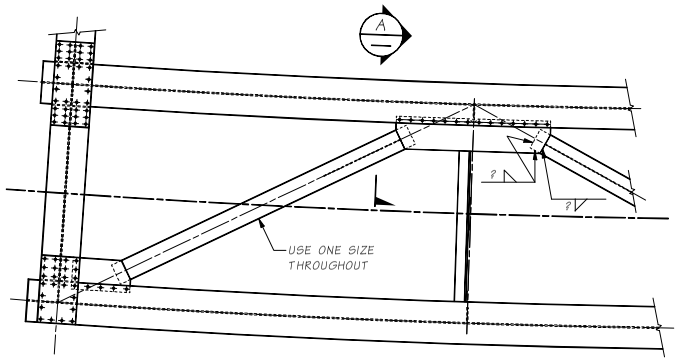

PLAN - EXAMPLE TOP LATERAL DETAILS

CONNECT LATERALS TO BOTTOM SIDE OF TOP FLANGE
USE BOLTED GUSSET PLATE OR BOLT DIRECTLY TO FLANGE
SIZE OF LATERALS AND CONNECTIONS WILL DEPEND ON LOADS

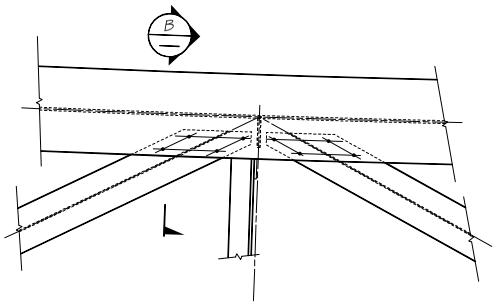

DETAIL SHOWING DIRECT BOLTING

PREFERRED ALTERNATIVE WHERE SPACE AND LOADING PERMITS
MAY REQUIRE THE USE OF 1"ø AASHTO M253-X BOLTS, DO NOT WELD
VERIFY FLANGE STRESSES VICINITY BOLT HOLES ARE WITHIN ALLOWABLE

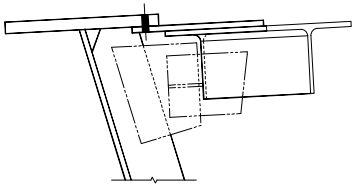

VIEW A

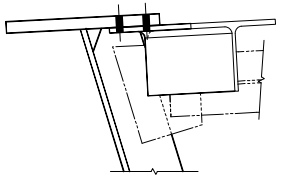

VIEW B

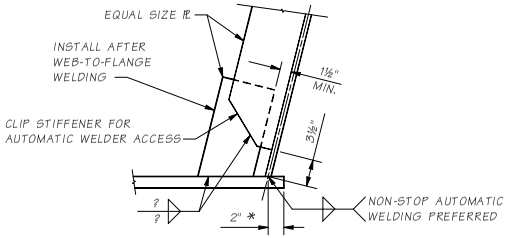

LOWER TRANSVERSE STIFFENER DETAIL

* BOTTOM FLANGE EXTENSION TO ALLOW AUTOMATIC WELDER USE

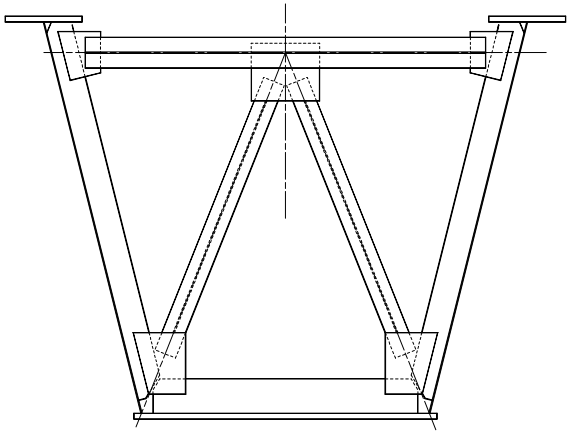

EXAMPLE CROSSFRAME WITHOUT FLANGE STIFFENER

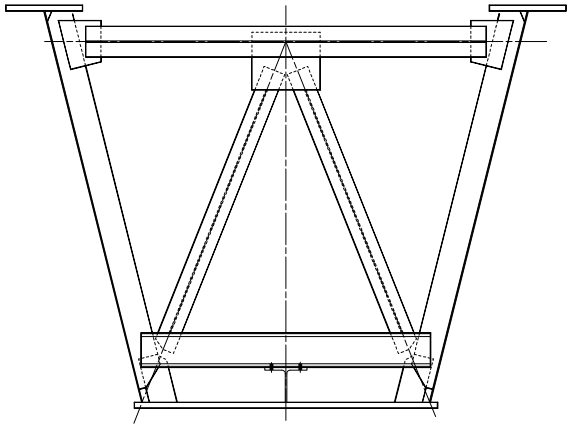

EXAMPLE CROSSFRAME REGIONS WITH FLANGE STIFFENER

Bridge Design Engr.	M:\BRIDGELIB\BDM\Chapter 6\BDM BOX GIRDER DETAILS.			DESIGN NO.	STATE	FED. AID PROJ. NO.	SHEET NO.	TOTAL SHEETS	BRIDGE AND STRUCTURES OFFICE
Supervisor				10	WASH.				Washington State Department of Transportation
Designed By									EXAMPLE BOX GIRDER DETAILS
Checked By				JOB NUMBER					BRIDGE SHEET NO.
Detailed By									SHEET
Bridge Projects Engr.									OF
Prelim. Plan By									SHEETS
Architect/Specialist	DATE	REVISION	BY	APPD					

Fri Feb 08 14:20:37 2008

SR JOB NO. SHEET

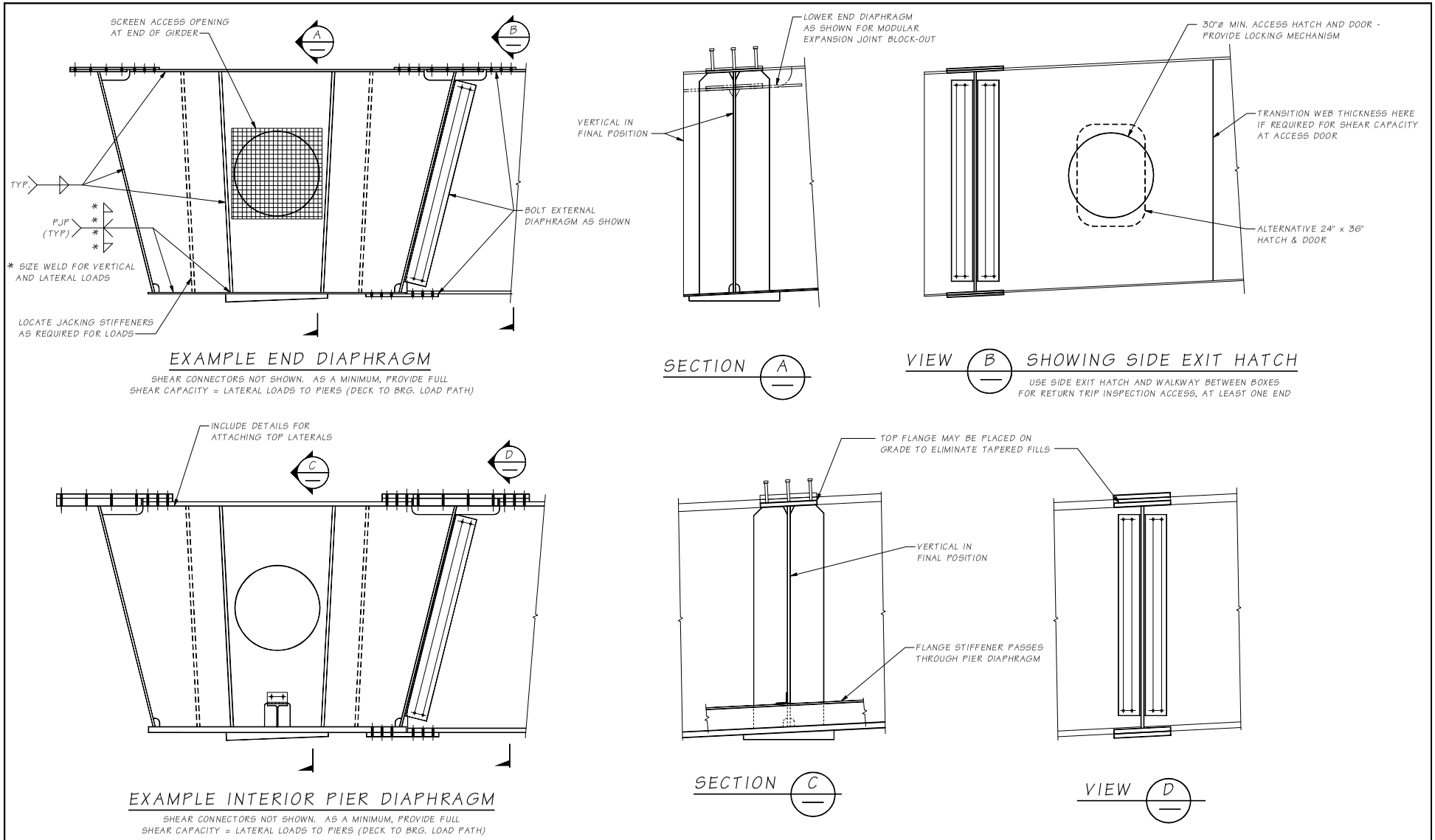

Bridge Design Engr.	<window files>BDM BOX GIRDER DETAILS 3				REGION NO.	STATE	FED. AID PROJ. NO.	SHEET NO.	TOTAL SHEETS	BRIDGE AND STRUCTURES OFFICE	Washington State Department of Transportation
Supervisor					10	WASH.					
Designed By											
Checked By					JOB NUMBER						
Detailed By											
Bridge Projects Engr.											
Prelim. Plan By											
Architect/Specialist	DATE	REVISION	BY	APP'D							

Fri Feb 08 14:20:40 2008

EXAMPLE BOX GIRDER PIER DIAPHRAGM DETAILS

BRIDGE SHEET NO.
SHEET OF SHEETS

SR JOB NO. 013447 SHEET 3

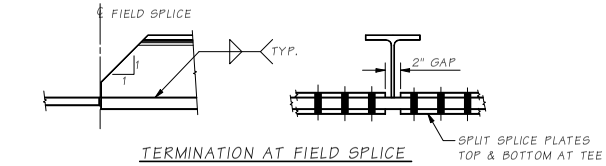

TERMINATION AT FIELD SPLICE

THIS IS THE PREFERED TERMINATION METHOD

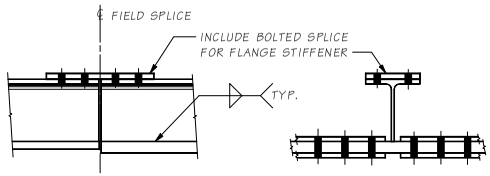

CONTINUATION PAST FIELD SPLICE

BOTTOM FLANGE STIFFENER TERMINATION DETAILS

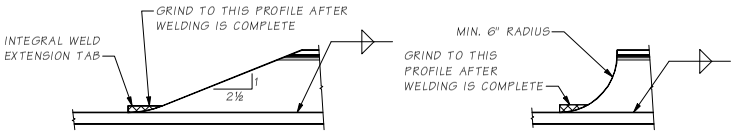

ALT. 1

USE WHERE TERMINATION OCCURS IN REGION OF HIGH STRESS RANGE (AVOID IF POSSIBLE)

ALT. 2

USE WHERE STRESS RANGE IS LOW (CATEGORY C DETAIL)

BOTTOM FLANGE STIFFENER TERMINATIONS BEYOND FIELD SPLICE

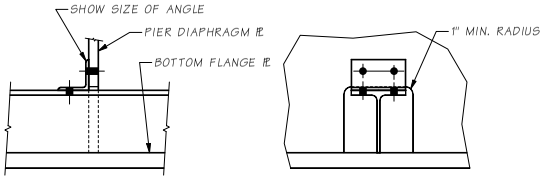

STIFFENER DETAIL AT PIER DIAPHRAGM

BEARING NOT SHOWN THIS DETAIL - LOCATE BRG STIFFENERS TO CLEAR

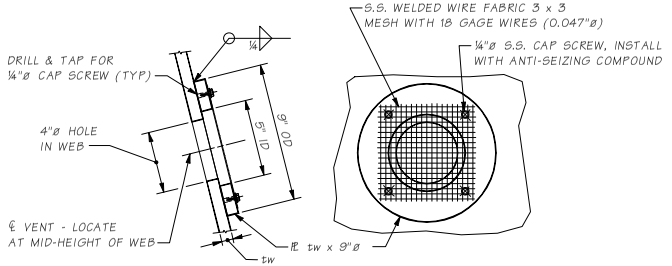

VENT HOLE DETAILS

SHOW LOCATIONS OF VENT HOLES ON "GIRDER ELEVATION"
SPACE VENTS AT ABOUT 50 FT. CENTERS, STAGGER LT & RT

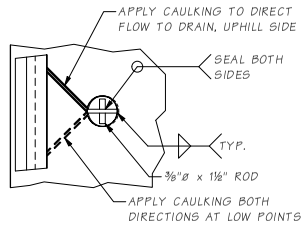

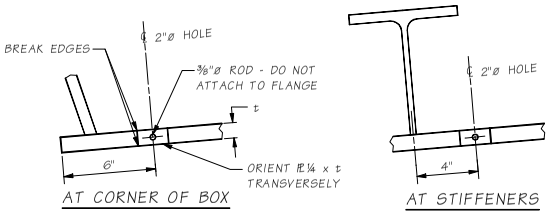

DRAIN HOLE DETAILS

SHOW ALL LOW POINTS IN BRIDGE TO LOCATE DRAINS
DO NOT USE WHERE OTHER FEATURES DRAIN WATER

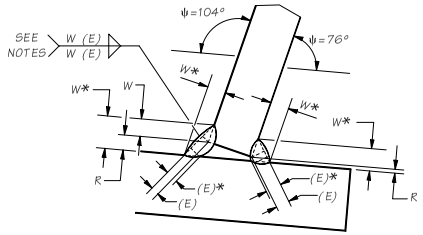

DETAIL FOR WEBS < ¾"

ACCEPTABLE PROVIDED ROOT OPENINGS MEET AWS D1.5 FIT-UP REQUIRMENTS & EFFECTIVE THROAT IS MAINTAINED FOR SINGLE PASS WELDING

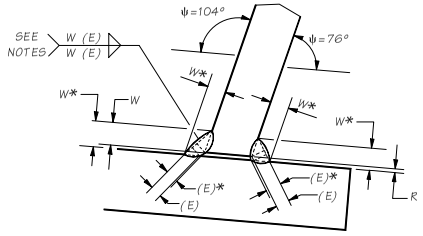

WEB-TO-FLANGE WELD DETAILS

* REFER TO AWS D1.5 FIG. 2.3, SECT. 3.3.1, AND ANNEX II FOR SKEWED T-JOINTS
BOTTOM FLANGE SHOWN, TOP SIMILAR

NOTES: W IS NORMALLY ⅝" AND SHOULD BE SIZED BY THE DESIGNER

EFFECTIVE THROAT (E) SHOULD BE DETERMINED BY THE DESIGNER, NORMALLY ¼" MINIMUM. THIS DIMENSION MUST BE ACHIEVED IN PRODUCTION.

THE FABRICATOR MUST COMPENSATE ACTUAL WELD SIZES W AND (E) FOR ROOT (R) AND DIHEDRAL ψ ASSUMING ⅝" WELD SIZE, W*=0.27"+R; ψ=76°
W*=0.35"+R; ψ=104°

REDUCTION OF WELD LEG SIZE IS ACCEPTABLE PROVIDED ACTUAL EFFECTIVE THROAT IS DETERMINED BY JOINT QUALIFICATION

SINGLE, CONTINUOUS PASS WELDING IS DESIRED

WELD SYMBOL IN PLANS SHOULD ONLY SHOW W & (E), WITH A NOTE TO CORRECT PER AWS D1.5

Bridge Design Engr.	<Window files>bdm box details 2				REGION NO.	STATE	FED. AID PROJ. NO.	SHEET NO.	TOTAL SHEETS
Supervisor					10	WASH.			
Designed By									
Checked By					JOB NUMBER				
Detailed By									
Bridge Projects Engr.									
Prelim. Plan By									
Architect/Specialist	DATE	REVISION	BY	APPD					

Fri Feb 08 14:20:44 2008

BRIDGE AND STRUCTURES OFFICE

Washington State Department of Transportation

EXAMPLE BOX GIRDER MISCELLANEOUS DETAILS

BRIDGE SHEET NO. SHEET OF SHEETS

SR JOB NO. 013447 SHEET 4

Chapter 7 Substructure Design Contents

7.1	**General Substructure Considerations**		7.1-1
	7.1.1	Foundation Design Process	7.1-1
	7.1.2	Foundation Design Limit States	7.1-4
	7.1.3	Seismic Design	7.1-4
	7.1.4	Substructure and Foundation Loads	7.1-4
	7.1.5	Concrete Class for Substructure	7.1-5
	7.1.6	Foundation Seals	7.1-5
7.2	**Foundation Modeling**		7.2-1
	7.2.1	General	7.2-1
	7.2.2	Substructure Linear Dynamic Analysis Procedure	7.2-1
	7.2.3	Bridge Model Section Properties	7.2-2
	7.2.4	Bridge Model Verification	7.2-3
	7.2.5	Deep Foundation Modeling Methods	7.2-4
	7.2.6	Lateral Analysis of Piles and Shafts	7.2-8
	7.2.7	Spread Footing Modeling	7.2-9
7.3	**Column Design**		7.3-1
	7.3.1	Preliminary Plan Stage	7.3-1
	7.3.2	General Column Criteria	7.3-1
	7.3.3	Column Design Flow Chart – Non-Seismic Design	7.3-2
	7.3.4	Slenderness Effects	7.3-4
	7.3.5	Moment Magnification Method	7.3-4
	7.3.6	Second-Order Analysis	7.3-5
	7.3.7	Shear Design	7.3-6
7.4	**Column Reinforcement**		7.4-1
	7.4.1	Reinforcing Bar Material	7.4-1
	7.4.2	Longitudinal Reinforcement Ratio	7.4-1
	7.4.3	Longitudinal Splices	7.4-1
	7.4.4	Longitudinal Development	7.4-3
	7.4.5	Transverse Reinforcement	7.4-5
	7.4.6	Hinge Diaphragms	7.4-8
	7.4.7	Column Hinges	7.4-9
7.5	**Abutment Design and Details**		7.5-1
	7.5.1	Abutment Types	7.5-1
	7.5.2	Embankment at Abutments	7.5-3
	7.5.3	Abutment Loading	7.5-3
	7.5.4	WSDOT Temporary Construction Load Cases	7.5-5
	7.5.5	Abutment Bearings and Girder Stops	7.5-5
	7.5.6	Abutment Expansion Joints	7.5-7
	7.5.7	Open Joint Details	7.5-7
	7.5.8	Construction Joints	7.5-9
	7.5.9	Abutment Wall Design	7.5-9
	7.5.10	Drainage and Backfilling	7.5-11

7.6	**Wing/Curtain Wall at Abutments**		7.6-1
	7.6.1	Traffic Barrier Loads	7.6-1
	7.6.2	Wingwall Design	7.6-1
	7.6.3	Wingwall Detailing	7.6-1
7.7	**Footing Design**		7.7-1
	7.7.1	General Footing Criteria	7.7-1
	7.7.2	Loads and Load Factors	7.7-2
	7.7.3	Geotechnical Report Summary	7.7-3
	7.7.4	Spread Footing Structural Design	7.7-4
	7.7.5	Footing Concrete Design on Pile Supports	7.7-10
7.8	**Drilled Shafts**		7.8-1
	7.8.1	Axial Resistance	7.8-1
	7.8.2	Structural Design and Detailing	7.8-2
7.9	**Piles and Piling**		7.9-1
	7.9.1	Pile Types	7.9-1
	7.9.2	Single Pile Axial Resistance	7.9-2
	7.9.3	Block Failure	7.9-3
	7.9.4	Pile Uplift	7.9-3
	7.9.5	Pile Spacing	7.9-3
	7.9.6	Structural Design and Detailing of CIP Concrete Piles	7.9-3
	7.9.7	Pile Splices	7.9-4
	7.9.8	Pile Lateral Design	7.9-4
	7.9.9	Battered Piles	7.9-5
	7.9.10	Pile Tip Elevations and Quantities	7.9-5
	7.9.11	Plan Pile Resistance	7.9-5

Appendix B

Appendix 7-B-1	Linear Spring Calculation Method II (Technique I)	7-B-1-1

7.1 General Substructure Considerations

Note that in the following guidelines where reference is made to AASHTO, the item can be found in the current AASHTO LRFD Bridge Design Specifications, with Interims.

7.1.1 Foundation Design Process

A flowchart is provided in Figure 7.1.1-1 which illustrates the overall design process needed to accomplish an LRFD foundation design. Note this process is also outlined in the Geotechnical Design Manual (GDM) in Section 8.2. The Bridge and Structures Office (BO) and the Geotechnical Branch (GB) have been abbreviated. The steps in the flowchart are defined as follows:

A. Conceptual Bridge Foundation Design

This design step results in an informal communication produced by the Geotechnical Branch at the request of the Bridge and Structures Office which provides a brief description of the following.

- Anticipated soil site conditions
- Maximum embankment slopes
- Foundation types and geotechnical hazards such as liquefaction

In general, these recommendations rely on existing site data. Site borings may not be available and test holes are drilled later. The geotechnical recommendations provide enough information to select a type of foundation for an initial Bridge Preliminary Plan.

B. Develop Site Data and Preliminary Bridge Plan

In the second phase, the Bridge and Structures Office obtains site data from the region (see WSDOT Bridge Design Manual Section 2.2) and develops the Preliminary Bridge Plan. The preliminary pier locations determine soil boring locations at this time. The Geotechnical Branch will also require the following information to continue the preliminary geotechnical design.

- Structure type and magnitude of settlement the structure can tolerate (both total and differential).
- At abutments – Approximate maximum top of foundation elevation.
- At interior piers – The number of columns; whether a single foundation element supports each column or one foundation element supports multiple columns.
- At stream crossings – Pier scour depth, if known. Typically, the Geotechnical Branch will pursue this issue with the HQ Hydraulics Section.
- Any known structural constraints that affect the foundations' type, size, or location.
- Any known constraints that affect the soil resistance (utilities, construction staging, excavation, shoring and falsework).

C. Preliminary Foundation Design

The third phase is a request by the Bridge and Structures Office for a preliminary foundation memorandum. The Geotechnical Branch memo will provide preliminary soil data required for structural analysis and modeling. This includes any subsurface conditions and the preliminary subsurface profile.

The concurrent geotechnical work at this stage includes:

- Completion of detailed boring logs and laboratory test data
- Development of foundation type, soil capacity, and foundation depth
- Development of static/seismic soil properties and ground acceleration
- Recommendations for constructability issues

D. Structural Analysis and Modeling

In the fourth phase, the Bridge and Structures Office performs a structural analysis of the superstructure and substructure using a bridge model and preliminary soil parameters. Through this modeling, the designer determines loads and sizes for the foundation based on the controlling LRFD limit states. Structural and geotechnical design continues to investigate constructability and construction staging issues during this phase.

In order to produce a Final Geotechnical Report, the Bridge and Structures Office provides the following structural feedback to the Geotechnical Engineer.

- Foundation loads for service limit state and strength limit state.
- Foundation size/diameter and depth required to meet structural design.
- Foundation details that could affect the geotechnical design of the foundations.
- Size and configuration for deep foundation groups.

E. Final Foundation Design

The last phase completes the geotechnical report and allows the final structural design to begin. The preliminary geotechnical assumptions are checked and recommendations are modified, if necessary. The final report is complete to a PS&E format since the Project Contract will contain referenced information in the Geotechnical Report, such as:

- All geotechnical data obtained at the site (boring logs, subsurface profiles, and laboratory test data)
- All final foundation recommendations
- Final constructability and staging recommendations

The designer reviews the final report for new information and confirms the preliminary assumptions. With the foundation design complete, the final bridge structural design and detailing process continues to prepare the Bridge Plans. Following final structural design, the structural designer should follow up with the geotechnical designer to ensure that the design is within the limits of the Geotechnical Report.

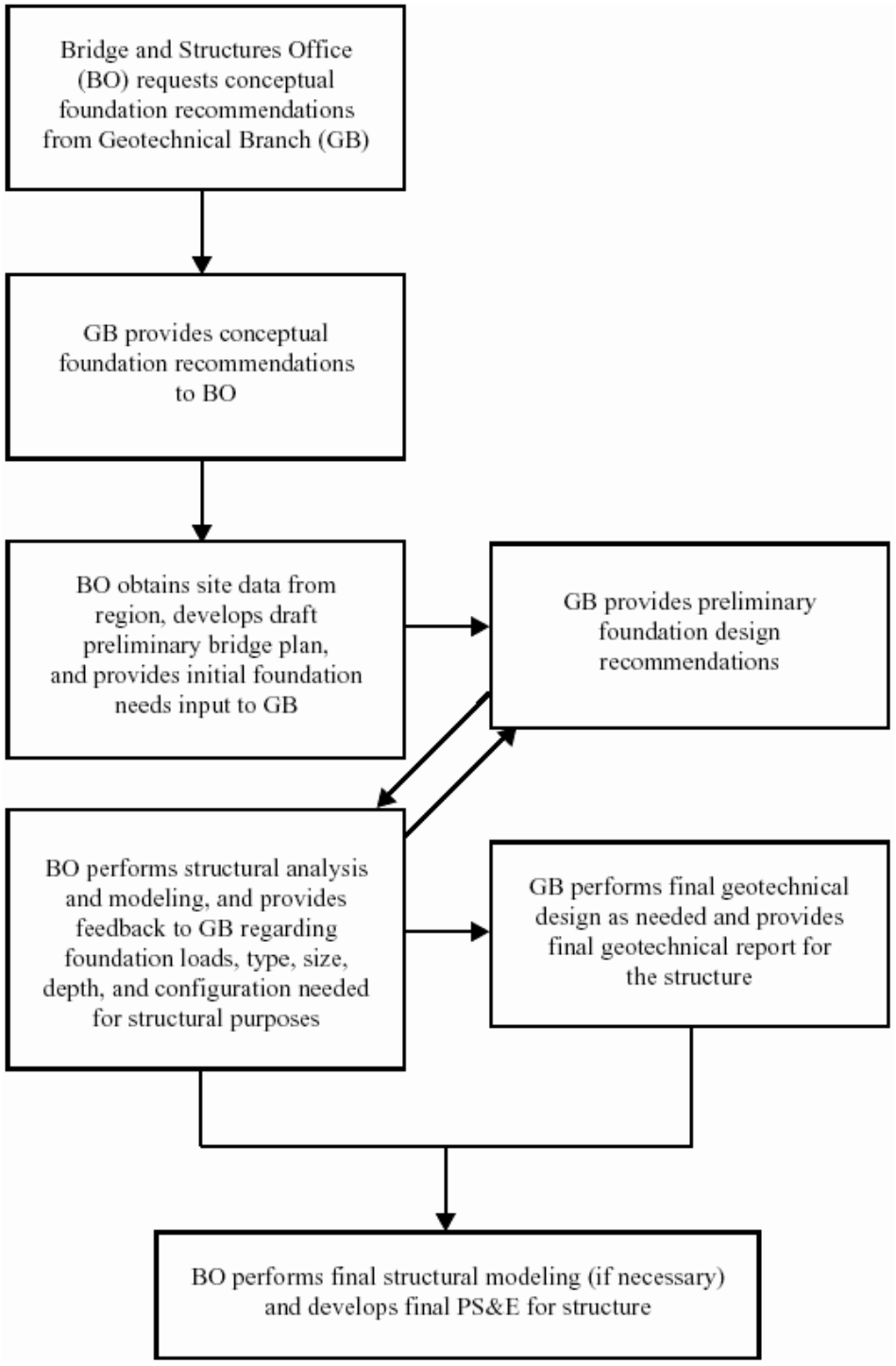

Overall Design Process for LRFD Foundation Design
Figure 7.1.1-1

7.1.2 Foundation Design Limit States

The controlling limit states for WSDOT projects for Substructure Design are described as follows:

Strength I	Relating to the normal vehicular use
Strength III	Relating to the bridge exposed to wind
Strength IV	Relating to temperature fluctuations, creep, and shrinkage
Strength V	Relating to the normal vehicular use and wind
Extreme-Event I	Relating to earthquake
Service I	Relating to normal operational use and wind

7.1.3 Seismic Design

The seismic design of all substructures shall be in accordance with the AASHTO Guide Specifications for LRFD Seismic Bridge Design of May 2007, or later edition, except as noted otherwise.

7.1.4 Substructure and Foundation Loads

Figure 7.1.4-1 below provides a common basis of understanding for load location and orientations for substructure design. This figure also shows elevations required for abutment and substructure design. Note that for shaft and some pile foundation designs, the shaft or pile may form the column as well as the foundation element.

Spread footings usually have a design orientation normal to the footing. Since bridge loads are longitudinal and transverse, skewed superstructure loads are converted (using vector components) to normal and parallel footing loads. Deep foundation analysis usually has a normal/parallel orientation to the pier in order to simplify group effects.

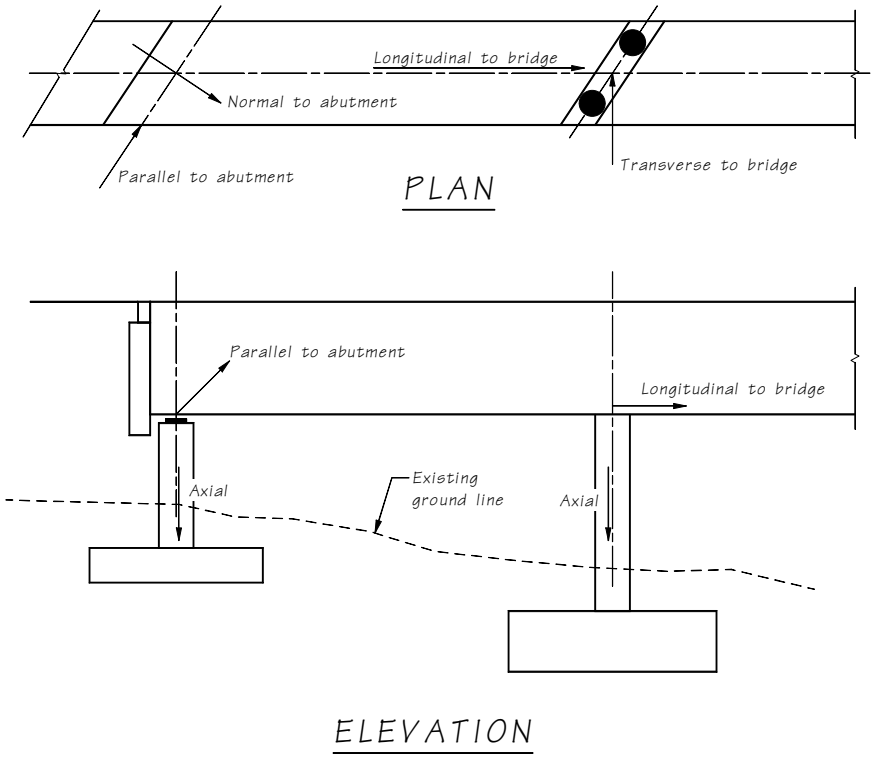

Substructure Directional Forces
Figure 7.1.4-1

Substructure elements are to carry all of the loads specified in AASHTO. Selecting the controlling load conditions requires good judgment to minimize design time.

Bridge design will consider construction loads to ensure structural stability and prevent members from overstress. For example, temporary construction loads caused by placing all of the precast girders on one side of a crossbeam can overload a single column pier. The plans shall show a construction sequence and/or notes to avoid unacceptable loadings.

On curved bridges, the substructure design shall consider the eccentricity resulting from the difference in girder lengths. When superstructure design uses a curved girder theory, such as the V-Load Method, the reactions from such analysis must be included in the loads applied to the substructure.

A. Dead Loads - DC

   Substructure design shall account for all anticipated dead load conditions. Sidesway effect shall be included where it tends to increase stresses.

B. Live Loads - LL

   The dynamic allowance (IM) shall be applied in accordance with AASHTO 3.6.2 and is not included in the design of buried elements of the substructure. Portions of the abutments in contact with the soil are considered buried elements.

D. Earthquake Loads - EQ

   Earthquake loads shall be developed in accordance with the AASHTO Guide Specifications for LRFD Seismic Bridge Design.

7.1.5 Concrete Class for Substructure

The concrete class for all substructure elements shall normally be Class 4000. This includes footings, pedestals, massive piers, columns, crossbeams, traffic barriers, and retaining walls, wingwalls, and curtain walls connected to the bridge substructure or superstructure. Foundation seals shall be Class 4000W.

7.1.6 Foundation Seals

A concrete seal within the confines of a cofferdam permits construction of a pier footing and column in the dry. This type of underwater construction is practical to a water depth of approximately 50 feet.

Seal concrete is placed underwater with the use of a tremie. A tremie is a long pipe that extends to the bottom of the excavation and permits a head to be maintained on the concrete during placement. After the concrete has been placed and has obtained sufficient strength, the water within the cofferdam is removed. In Figure 7.1.6-1, some of the factors that must be considered in designing a seal are illustrated.

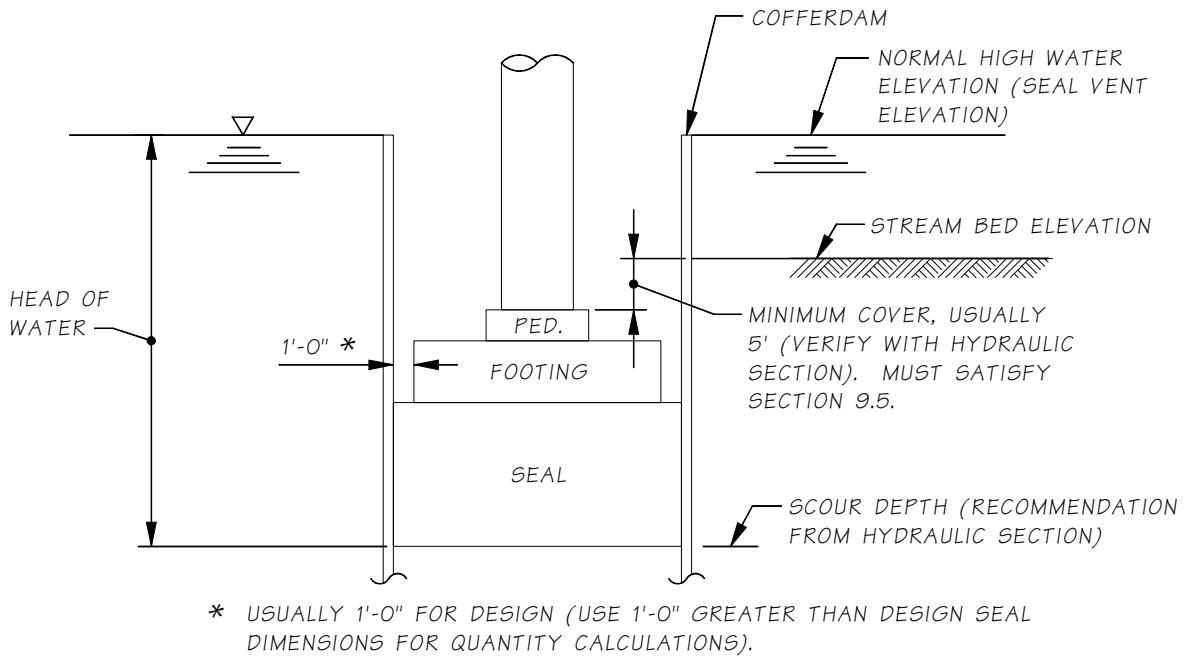

Figure 7.1.6-1

A. General Seal Criteria

The Normal High Water Elevation is defined as the highest water surface elevation that may normally be expected to occur during a given time period. This elevation, on the Hydraulics Data Sheet, is obtained from discussions with local residents or by observance of high water marks at the site. The normal high water is not related to any flood condition.

1. Seal Vent Elevation

   The HQ Hydraulics Section recommends a seal vent elevation in accordance with the following criteria.

   a. Construction time period not known.

      If the time period of the footing construction is not known, the vent elevation reflects the normal high water elevation that might occur at any time during the year.

   b. Construction time period known.

      If the time period of the footing construction can be anticipated, the vent elevation reflects the normal high water elevation that might occur during this time period. (If the anticipated time period of construction is later changed, the HQ Hydraulics Section shall be notified and appropriate changes made in the design.)

2. Scour Depth

   The HQ Hydraulics Section determines the depth of the anticipated scour. The bottom of footing, or bottom of seal if used, shall be no higher than the scour depth elevation. After preliminary footing and seal thicknesses have been determined, the Bridge Designer shall review the anticipated scour elevation with the Hydraulics Section to ensure that excessive depths are not used.

3. Foundation Elevation Recommended in Geotechnical Report

   Based on the results obtained from test borings at the site, the Geotechnical Engineer determines a foundation elevation, bearing capacity and settlement criteria. If other factors control, such as scour or footing cover, the final footing elevation should be adjusted as required.

4. Unusual Conditions

   Unusual site conditions such as rock formations or deep foundations require special considerations in order to obtain the most optimum design. The proposed foundation design/ construction should be discussed with both the Geotechnical Branch and the HQ Hydraulics Section prior to final plan preparation.

B. Spread Footing Seals

The Geotechnical Branch will generally recommend whether a foundation seal may or may not be required for construction. Bearing loads are the column moments applied at the base of the footing and vertical load applied at the bottom of the seal. The seal is sized for the soil bearing, capacity, and Overturning Stability need only be checked at the base of the pier footing.

1. When a Seal is Required During Construction

   If the footing can be raised without violating cover requirements, the bottom of the seal elevation shall be the lower of the scour elevation or the foundation elevation as recommended by the Geotechnical Engineer. The bottom of the seal may be lower than the scour elevation or foundation elevation due to cover requirements. Spread footing final design shall include the dead load weight of the seal.

2. When a Seal May Not Be Required for Construction

   Both methods of construction are detailed in the Plans when it is not clear if a seal is required for construction. The Plans must detail a footing with a seal and an alternate without a seal. The Plan quantities are based on the footing designed with a seal. If the alternate footing elevation is different from the footing with seal, it is also necessary to note on the plans the required changes in rebar such as length of column bars, increased number of ties, etc. Note that this requires the use of either General Special Provision (GSP) 02306B1.GB6 or 02306B2.GB6.

C. Pile Footing Seals

The top of footing, or pedestal, is set by the footing cover requirements. The bottom of seal elevation is based on the stream scour elevation determined by the HQ Hydraulics Section. A preliminary analysis is made using the estimated footing and seal weight, and the column moments and vertical load at the base of the footing to determine the number of piles and spacing. The seal size shall be 1 foot 0 inches larger than the footing all around. If the seal is omitted during construction, the bottom of footing shall be set at the scour elevation and an alternate design is made.

In general seal design requires determining a thickness such that the seal weight plus any additional resistance provided by the bond stress between the seal concrete and any piling is greater than the buoyant force (determined by the head of water above the seal). If the bond stress between the seal concrete and the piling is used to determine the seal thickness, the uplift capacity of the piles must be checked against the loads applied to them as a result of the bond stress. The bond between seal concrete and piles is typically assumed to be 10 psi by other DOT's. As such it is also allowed here. The minimum seal thickness is 1'-6".

7.2 Foundation Modeling

7.2.1 General

Bridge modeling for seismic events shall be in accordance with requirements of the AASHTO Guide Specifications for LRFD Seismic Bridge Design Section 5, "Analytical Models and Procedures."

The following sections were developed for a force-based seismic design as required in previous versions of the AASHTO LRFD Bridge Design Specifications. Modifications have been made to the following sections to incorporate the provisions of the new AASHTO Guide Specifications for LRFD Seismic Bridge Design. As such, it is anticipated that this section will be revised as more experience is gained through the application of the Guide Specifications.

7.2.2 Substructure Linear Dynamic Analysis Procedure

The following is a general description of the iterative process used in a linear dynamic analysis. Note, a linear dynamic analysis is needed to determine the displacement demand, $\Delta_{D.}$

1. Build a Finite Element Model (FEM) in order to determine initial forces to substructure elements (EQ+DL). Assume that foundation springs are located at the bottom of the column.

   A good initial support assumption for deep foundations (shafts or piles) would be to add 10 feet to the column length in stiff soils and 15 feet to the column in soft soils. An alternate method is to use 85% of the fixed support reactions for the initial forces. Use fully fixed forces for foundations in rock.

   Use multi-mode response spectrum analysis to generate initial Seismic Shear, Moment, & Axial Loads.

2. Using the initial forces, determine a preliminary footing size, shaft size/length, or pile group arrangement. Note, the load combinations specified in Article 4.4 of the AASHTO Guide Specifications for LRFD Seismic Bridge Design SHOULD NOT be used in this iterative analysis.

3. For spread footing foundations, the FEM will include foundation springs calculated based on the footing size as calculated in BDM Section 7.2.7. No iteration is required unless the footing size changes.

4. For deep foundation analysis, the FEM and the soil response program must agree or converge on soil/structure lateral response. In other words, the moment, shear, deflection, and rotation of the two programs should be within 10%. More iteration will provide convergence much less than 1%. The iteration process to converge is as follows:

   a. Apply the initial FEM loads (moment and shear) to a soil response program such as DFSAP. DFSAP is a program that models Short, Intermediate or Long shafts or piles using the Strain Wedge Theory.

   b. Calculate foundation spring values for the FEM. Note, the load combinations specified in Article 4.4 of the AASHTO Guide Specifications for LRFD Seismic Bridge Design should not be used to determine foundation springs.

   c. Re-run the seismic analysis using the foundation springs calculated from the soil response program. The structural response will change. Check to insure the FEM results (M, V, Δ, θ, and spring values) in the transverse and longitudinal direction are within 10% of the previous run. This check verifies the linear spring, or soil response (calculated by the FEM) is close to the predicted nonlinear soil behavior (calculated by the soil response program). If the results of the FEM and the soil response program differ by more than 10%, recalculate springs and repeat steps (a) thru (c) until the two programs converge to within 10%.

Special note for single column/single shaft configuration: The seismic design philosophy requires a plastic hinge in the substructure elements above ground (preferably in the columns). Designers should note the magnitude of shear and moment at the top of the shaft, if the column "zero" moment is close to a shaft head foundation spring, the FEM and soil response program will not converge and plastic hinging might be below grade.

Throughout the iteration process it is important to note that any set of springs developed are only applicable to the loading that was used to develop them (due to the inelastic behavior of the soil in the foundation program). This can be a problem when the forces used to develop the springs are from a seismic analysis that combines modal forces using a method such as the Complete Quadratic Combination (CQC) or other method. The forces that result from this combination are typically dominated by a single mode (in each direction as shown by mass participation). This results in the development of springs and forces that are relatively accurate for that structure. If the force combination (CQC or otherwise) is not dominated by one mode shape (in the same direction), the springs and forces that are developed during the above iteration process may not be accurate.

7.2.3 Bridge Model Section Properties

In general, gross section properties may be assumed for all FEM members, except concrete columns.

A. Cracked Properties for Columns

Effective section properties shall be in accordance with the AASHTO Guide Specifications for LRFD Seismic Bridge Design Section 5.6.

B. Shaft Properties

The moment of inertia for shafts shall be based on the gross section (I_g) or non-cracked. The shaft concrete strength and construction methods lead to significant variation in shaft stiffness described as follows.

For a stiff substructure response:

1. Use 1.5 f'c to calculate the modulus of elasticity. Since aged concrete will generally reach a compressive strength of at least 6 ksi when using a design strength of 4 ksi, the factor of 1.5 is a reasonable estimate for an increase in stiffness.
2. Increase shaft I_g by increasing the shaft diameter by the amount allowed by the current ADSC/WSDOT Shaft Special Provision. The ADSC/WSDOT shaft special provision allows contractors to increase the shaft diameter to accommodate metric casings used in the oscillator and rotator drilling methods. See subsection 2.01.D of the current ADSC/WSDOT Shaft Special Provision.
3. In cases where stepped shaft construction is allowed, the specified increase in diameter should be included in the bracketing of the response. See subsection 3.03.C of the current ADSC/WSDOT Shaft Special Provision for allowable increase in shaft diameter for stepped shafts with telescoping casing.
4. When permanent casing is specified, increase shaft I_g using the transformed area of a ¾" thick casing. Since the contractor will determine the thickness of the casing, ¾" is a conservative estimate for design.

For a soft substructure response:

1. Use 0.85 f'c to calculate the modulus of elasticity. Since the quality of shaft concrete can be suspect when placed in water, the factor of 0.85 is an estimate for a decrease in stiffness.
2. Use shaft I_g.
3. When permanent casing is specified, increase shaft I_g using the transformed area of a ⅜" thick casing. Since the contractor will determine the thickness of the casing, ⅜" is a minimum estimated thickness for design.

C. Cast-in-Place Pile Properties

For a stiff substructure response:

1. Use 1.5 f'c to calculate the modulus of elasticity. Since aged concrete will generally reach a compressive strength of at least 6 ksi when using a design strength of 4 ksi, the factor of 1.5 is a reasonable estimate for an increase in stiffness.
2. Use the pile I_g plus the transformed casing moment of inertia. Note: If DFSAP is used for analysis, the reinforcing and shell properties are input and the moment of inertia is computed internally.

$$I_{pile} = I_g + (n)(I_{shell}) + (n)(I_{reinf})$$

where: $n = E_c/E_s$

Use a steel casing thickness of ¼" for piles less than 14 inches in diameter, ⅜" for piles 14 to 18 inches in diameter, and ½" for larger piles. Note: These casing thicknesses are to be used for analysis only, the contractor is responsible for selecting the casing thickness required to drive the piles.

For a soft substructure response:

1. Use 1.0 f'c to calculate the modulus of elasticity.
2. Use pile I_g, neglecting casing properties.

7.2.4 Bridge Model Verification

As with any FEM, the designer should review the foundation behavior to ensure the foundation springs correctly imitate the known boundary conditions and soil properties. Watch out for mismatch of units.

All finite element models must have dead load static reactions verified and boundary conditions checked for errors. The static dead loads (DL) must be compared with hand calculations or another program's results. For example, span member end moment at the supports can be released at the piers to determine simple span reactions. Then hand calculated simple span DL or PGsuper DL and LL is used to verify the model.

Crossbeam behavior must be checked to ensure the superstructure DL is correctly distributing to substructure elements. A 3D bridge line model concentrates the superstructure mass and stresses to a point in the crossbeam. Generally, interior columns will have a much higher loading than the exterior columns. To improve the model, crossbeam I_g should be increased to provide the statically correct column DL reactions. This may require increasing I_g by about 1000 times. Many times this is not visible graphically and should be verified by checking numerical output.

Seismic analysis may also be verified by hand calculations. Hand calculated fundamental mode shape reactions will be approximate; but will ensure design forces are of the same magnitude.

Designers should note that additional mass might have to be added to the bridge FEM for seismic analysis. For example, traffic barrier mass and crossbeam mass beyond the last column at piers may contribute significant weight to a two-lane or ramp structure.

7.2.5 Deep Foundation Modeling Methods

A designer must assume a foundation support condition that best represents the foundation behavior. Deep foundation elements attempt to imitate the non-linear lateral behavior of several soil layers interacting with the deep foundation. The bridge FEM then uses the stiffness of the element to predict the seismic structural response. Models using linear elements that are not based on non-linear soil-structure interaction are generally considered inaccurate for soil response/element stress and are not acceptable. There are three methods used to model deep foundations (FHWA Report No. 1P-87-6). Of these three methods the Bridge and Structures Office prefers Method II for the majority of bridges.

A. Method I – Equivalent Cantilever Column

   This method assumes a point of fixity some depth below the bottom of the column to model the stiffness of the foundation element. This could be used for a preliminary model of the substructure response.

B. Method II – Equivalent Base Springs

   This method models deep foundations by using a {6x6} matrix. There are two techniques used to generate the stiffness coefficients for the foundation matrix. The equivalent stiffness coefficients assessed are valid only at the given level of loading. Any changes of the shaft-head loads or conditions will require a new run for the program to determine the new values of the equivalent stiffness coefficients. These equivalent stiffness coefficients account for the nonlinear response of shaft materials and soil resistance.

   Technique I – The matrix is generated, using superposition, to reproduce the non-linear behavior of the soil and foundation at the maximum loading. With Technique I, 10 terms are produced, 4 of these terms are “cross couples”. Soil response programs, such as Lpile or DFSAP, analyze the non-linear soil response. The results are then used to determine the equivalent base springs. See Appendix 7-B-1 for more information

   Technique II – The equivalent stiffness matrix generated using this technique uses only the diagonal elements (no cross coupling stiffnesses). The DFSAP program should be used to develop the equivalent stiffness matrix. This technique is recommended be used to construct the foundation stiffness matrix (equivalent base springs).

   In Technique II the “cross couple” effects are internally accounted for as each stiffness element and displacement is a function of the given Lateral load (P) and Moment (M). Technique II uses the total response ($\Delta_{t(P,M)}$ $\theta_{t(P,M)}$) to determine displacement and equivalent soil stiffness, maintaining a nonlinear analysis. Technique I requires superposition by adding the individual responses due to the lateral load and moment to determine displacement and soil stiffness. Using superposition to combine two nonlinear responses results in errors in displacement and stiffness for the total response as seen in the Figure 7.2.5-1. As illustrated, the total response due to lateral load (P) and moment (M) does not necessarily equal the sum of the individual responses. For more details on the equivalent stiffness matrix, see the DFSAP reference manual.

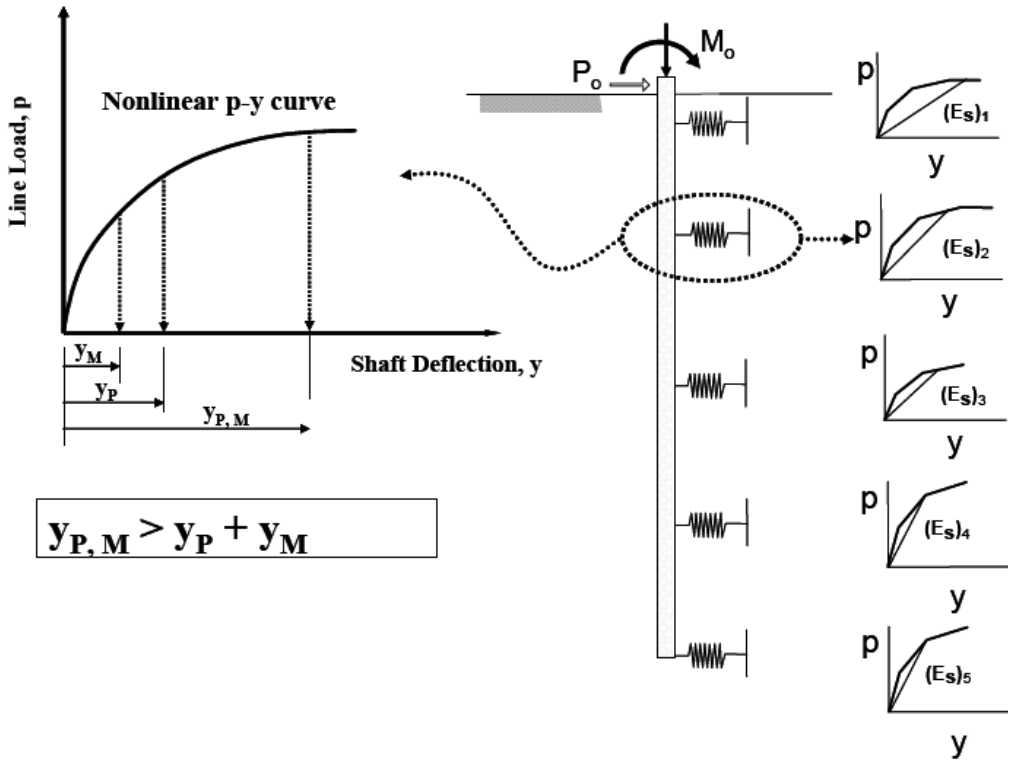

Limitations on the Technique I (Superposition Technique)
Figure 7.2.5-1

C. Method III – Non-Linear Soil Springs

This method attaches non-linear springs along the length of deep foundation members in a FEM model. See Appendix 7-B-2 for more information. This method has the advantage of solving the superstructure and substructure seismic response simultaneously. The soil springs must be nonlinear PY curves and represent the soil/structure interaction. This cannot be done during dynamic analysis with some FEM programs (including GTStrudl).

D. Spring Location (Method II)

The preferred location for a foundation spring is at the bottom of the column. This includes the column mass in the seismic analysis. For design, the column forces are provided by the FEM and the soil response program provides the foundation forces. Springs may be located at the top of the column. However, the seismic analysis will not include the mass of the columns. The advantage of this location is the soil/structure analysis includes both the column and foundation design forces.

Designers should be careful to match the geometry of the FEM and soil response program. If the location of the foundation springs (or node) in the FEM does not match the location input to the soil response program, the two programs will not converge correctly.

E. Boundary Conditions (Method II)

To calculate spring coefficients, the designer must first identify the predicted shape, or direction of loading, of the foundation member where the spring is located in the bridge model. This will determine if one or a combination of two boundary conditions apply for the transverse and longitudinal directions of a support.

A fixed head boundary condition occurs when the foundation element is in double curvature where translation without rotation is the dominant behavior. Stated in other terms, the shear causes deflection in the opposite direction of applied moment. This is a common assumption applied to both directions of a rectangular pile group in a pile supported footing.

A free head boundary condition is when the foundation element is in single curvature where translation and rotation is the dominant behavior. Stated in other terms, the shear causes deflection in the same direction as the applied moment. Most large diameter shaft designs will have a single curvature below ground line and require a free head assumption. The classic example of single curvature is a single column on a single shaft. In the transverse direction, this will act like a flagpole in the wind, or free head. What is not so obvious is the same shaft will also have single curvature in the longitudinal direction (below the ground line), even though the column exhibits some double curvature behavior. Likewise, in the transverse direction of multi-column piers, the columns will have double curvature (frame action). The shafts will generally have single curvature below grade and the free head boundary condition applies. The boundary condition for large shafts with springs placed at the ground line will be free head in most cases.

The key to determine the correct boundary condition is to resolve the correct sign of the moment and shear at the top of the shaft (or point of interest for the spring location). Since multi-mode results are always positive (CQC), this can be worked out by observing the seismic moment and shear diagrams for the structure. If the sign convention is still unclear, apply a unit load in a separate static FEM run to establish sign convention at the point of interest.

The correct boundary condition is critical to the seismic response analysis. For any type of soil and a given foundation loading, a fixed boundary condition will generally provide soil springs four to five times stiffer than a free head boundary condition.

F. Spring Calculation (Method II)

The first step to calculate a foundation spring is to determine the shear and moment in the structural member where the spring is to be applied in the FEM. Foundation spring coefficients should be based on the maximum shear and moment from the applied longitudinal OR transverse seismic loading. The combined load case (1.0L and 0.3T) should be assumed for the design of structural members, and NOT applied to determine foundation response. For the simple case of a bridge with no skew, the longitudinal shear and moment are the result of the seismic longitudinal load, and the transverse components are ignored. This is somewhat unclear for highly skewed piers or curved structures with rotated springs, but the principle remains the same.

G. Matrix Coordinate Systems (Method II)

The Global coordinate systems used to demonstrate matrix theory are usually similar to the system defined for substructure loads in BDM Section 7.1.3, and is shown in Figure 7.2.5-2. This is also the default Global coordinate system of GTStrudl. This coordinate system applies to this BDM Section to establish the sign convention for matrix terms. Note vertical axial load is labeled as P, and horizontal shear load is labeled as V.

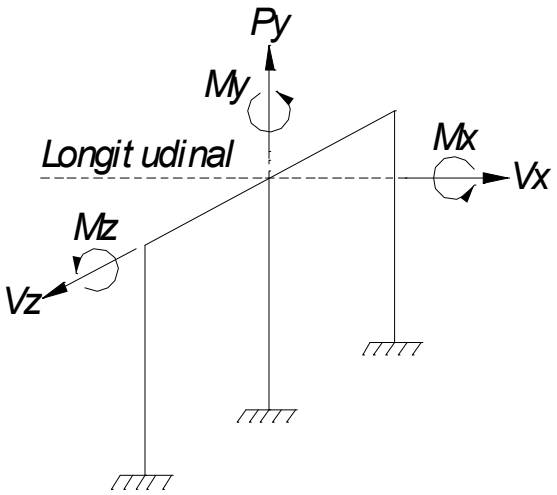

Global Coordinate System
Figure 7.2.5-2

H. Matrix Coefficient Definitions (Method II)

The stiffness matrix containing the spring values and using the standard coordinate system is shown in Figure 7.2.5-3. (Note that cross-couple terms generated using Technique I are omitted). For a description of the matrix generated using Technique I see Appendix 7-B-1. The coefficients in the stiffness matrix are generally referred to using several different terms. Coefficients, spring or spring value are equivalent terms. Lateral springs are springs that resist lateral forces. Vertical springs resist vertical forces.

$$\begin{Bmatrix} & Vx & Py & Vz & Mx & My & Mz \\ Vx & K11 & 0 & 0 & 0 & 0 & 0 \\ Py & 0 & K22 & 0 & 0 & 0 & 0 \\ Vz & 0 & 0 & K33 & 0 & 0 & 0 \\ Mx & 0 & 0 & 0 & K44 & 0 & 0 \\ My & 0 & 0 & 0 & 0 & K55 & 0 \\ Mz & 0 & 0 & 0 & 0 & 0 & K66 \end{Bmatrix} \times \begin{Bmatrix} Disp. \\ \Delta x \\ \Delta y \\ \Delta z \\ \theta x \\ \theta y \\ \theta z \end{Bmatrix} = \begin{Bmatrix} Force \\ Vx \\ Py \\ Vz \\ Mx \\ My \\ Mz \end{Bmatrix}$$

Standard Global Matrix
Figure 7.2.5-3

Where the linear spring constants or K values are defined as follows, using the Global Coordinates:

K11 = Longitudinal Lateral Stiffness (kip/in)
K22 = Vertical or Axial Stiffness (kip/in)
K33 = Transverse Lateral Stiffness (kip/in)
K44 = Transverse Bending or Moment Stiffness (kip-in/rad)
K55 = Torsional Stiffness (kip-in/rad)
K66 = Longitudinal Bending or Moment Stiffness (kip-in/rad)

The linear lateral spring constants along the diagonal represent a point on a non-linear soil/structure response curve. The springs are only accurate for the applied loading and less accurate for other loadings. This is considered acceptable for Strength and Extreme Event design. For calculation of spring constants for Technique I see Appendix 7-B-1. For calculation of spring constants for Technique II see the DFSAP reference manual.

I. Group Effects

When a foundation analysis uses Lpile or an analysis using PY relationships, group effects will require the geotechnical properties to be reduced before the spring values calculated. The Geotechnical Report will provide transverse and longitudinal multipliers that are applied to the PY curves. This will reduce the pile resistance in a linear fashion. The reduction factors for lateral resistance due to the interaction of deep foundation members is provided in the WSDOT Geotechnical Design Manual, Section 8.12.2.5.

Group effect multipliers are not valid when the DFSAP program is used. Group effects are calculated internally using Strain Wedge Theory.

J. Shaft Caps and Pile Footings

Where pile supported footings or shaft caps are entirely below grade, their passive resistance should be utilized. In areas prone to scour or lateral spreading, their passive resistance should be neglected. DFSAP has the capability to account for passive resistance of footings and caps below ground.

7.2.6 Lateral Analysis of Piles and Shafts

Lateral analysis of piles and shafts SHOULD NOT be based on the load combinations described in Article 4.4 of the AASHTO Guide Specifications for LRFD Seismic Bridge Design.

In general, lateral analysis of piles and shafts involves determination of a shaft or pile tip location sufficient to resist lateral loads. In many cases, the shaft or pile tip depth required to resist lateral loads may be deeper than that required for bearing or uplift. Determination of shaft or pile tip location requires engineering judgment. Suggested criteria are:

A. For seismically controlled designs, the bigger (stiffer) the shaft the more movement can be tolerated at the shaft tip. A seismic analysis will predict the maximum deflections and stresses and the engineer must determine a safe shaft depth to survive the event. Small pile fixity generally refers to the point of fixity for column design, or the first inflection point when observing deflection. The pile tip for small shafts/piles, one to two feet in diameter, should be determined at the location of approximately the second point of inflection. An acceptable movement at the tip during an Extreme Event has yet to be determined. In general, the smaller the better. Since these shafts/piles are relatively flexible in the soil, it is possible to have pile tips at the 2nd point of inflection with little or no movement (drift) and not have deep tip elevations that are costly.

B. Medium sized shafts, three to eight feet in diameter, tipping the shafts should consider an elevation near the midpoint of the 1st and 2nd inflection points. An acceptable movement at the tip during an Extreme Event has yet to be determined. In general, past practice has been the smaller the better based on the experience of small flexible piles.

C. Large shafts, greater than 10-foot diameter, will transfer significantly more stresses to the soil and much deeper in the soil than flexible piles. Tipping for large shafts should consider an elevation between the midpoint and near the quarter point of the 1st and 2nd inflections. An acceptable movement at the tip during an Extreme Event has yet to be determined.

The static parameters represent the soil behavior for short-term transient loads such as wind, ice, temperature, and vessel impact. For earthquake loads, the seismic and static soil properties will be the same if the soils present have a stiffness which does not degrade with time during shaking.

If liquefiable soils are present, both static and liquefied soil properties are provided in the Geotechnical Report. Often, the highest acceleration the bridge sees is in the first cycles of the earthquake, and liquefaction tends to occur toward the middle or end of the earthquake. Therefore, early in the earthquake, loads are high, soil-structure stiffness is high, and deflections are low. Later in the earthquake, the soil-structure stiffness is lower and deflections higher.

If liquefaction can occur, the bridge should be analyzed twice. The first analysis uses the static soil conditions, which yields higher moment and shear to design the shaft (and column). The second analysis uses the liquefied soils to evaluate the bridge Extreme Event deflections. The intent here is to bracket the structure response. The designer will have to determine the acceptable maximum lateral deflection.

7.2.7 Spread Footing Modeling

For a first trial footing configuration, Strength column moments or column plastic hinging moments may be applied to generate footing dimensions. Soil spring constants are developed using the footing plan area, embedment depth, Poisson's ratio ν shear modulus G. See Article 5.3.2 in the AASHTO Guide Specifications for LRFD Seismic Bridge Design for determination of G. Spring constants for shallow rectangular footings are obtained by modifying circular footing theory using the following Equation. This method for calculating footing springs is referenced in FHWA-IP-87-6, Section 7.2.4A, page 140.

$K = \alpha\beta K_o$

K = Rotational or Lateral spring

K_o = Stiffness coefficient for the equivalent circular footing, see Figure 7.2.7-1. These values are calculated using an equivalent circular footing radius. See Figure 7.2.7-2

α = Foundation shape correction factor, see Figure 7.2.7-3

β = Embedment factor, see Figure 7.2.7-4

Displacement Degree-of-Freedom	K_o
Vertical translation	$\frac{4GR}{1-\nu}$
Horizontal translation	$\frac{8GR}{2-\nu}$
Torsional rotation	$\frac{16GR^3}{3}$
Rocking rotation	$\frac{8GR^3}{3(1-\nu)}$

Stiffness Coefficients
Figure 7.2.7-1

Figure 7.2.7-2 describes the parameters used to calculate the equivalent radius values (R). Note, that "D" is the depth, or thickness, of the footing. "D" is not the total embedment of the footing (the distance from the ground line to the bottom of the footing).

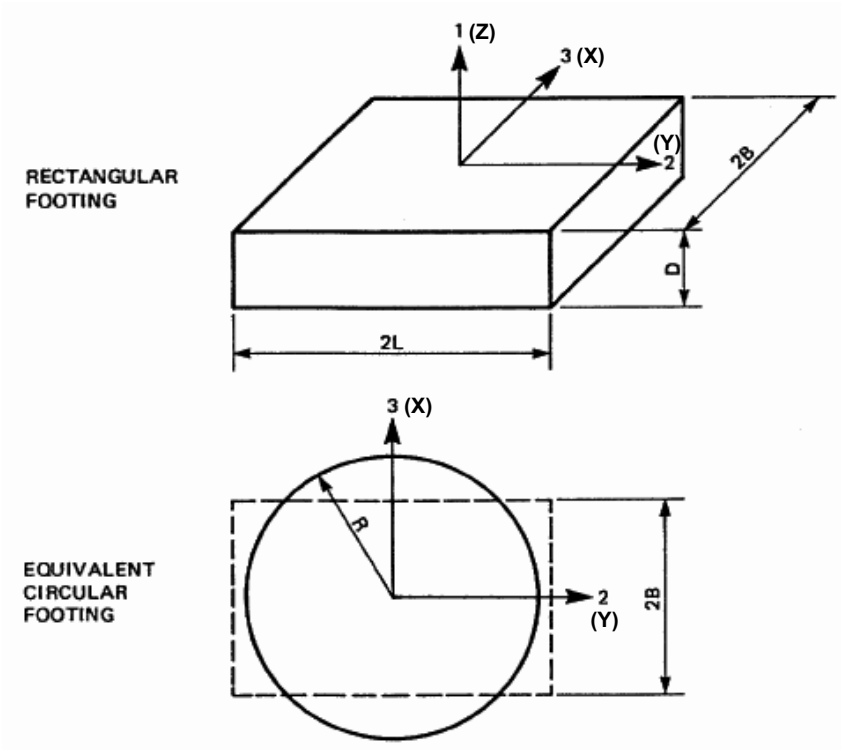

Equivalent Radius	K_o
Translational	$R_o = \sqrt{\frac{4BL}{\pi}}$
Z-Axis Torsion	$R_1 = \left[\frac{4BL\left(4B^2 + 4L^2\right)}{6\pi}\right]^{1/4}$
Y-Axis Rocking	$R_2 = \left[\frac{(2B)^3(2L)}{3\pi}\right]^{1/4}$
X-Axis Rocking	$R_3 = \left[\frac{(2B)(2L)^3}{3\pi}\right]^{1/4}$

Stiffness Coefficients
Figure 7.2.7-2

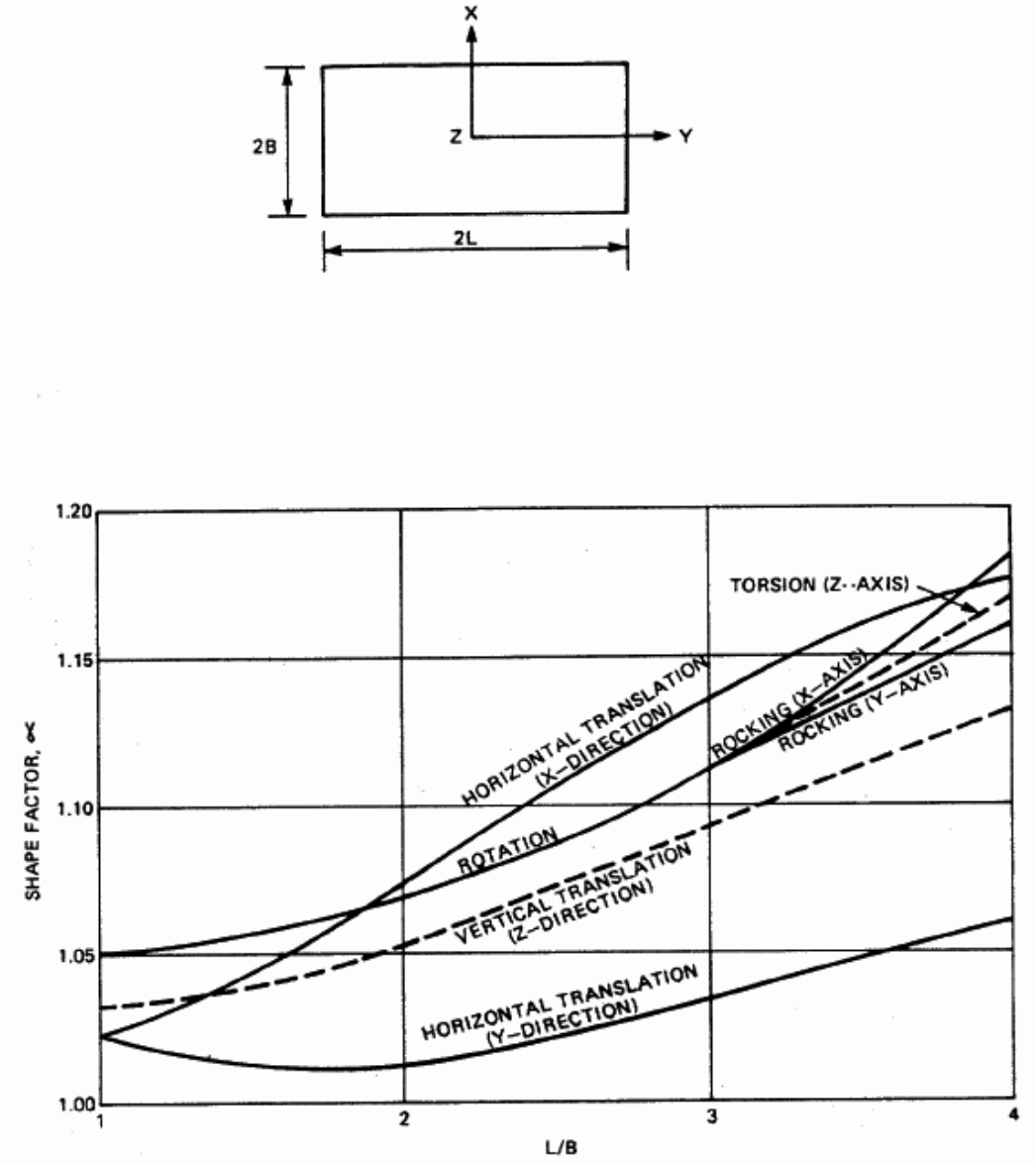

Shape Factor for Rectangular Footings

Figure 7.2.7-3

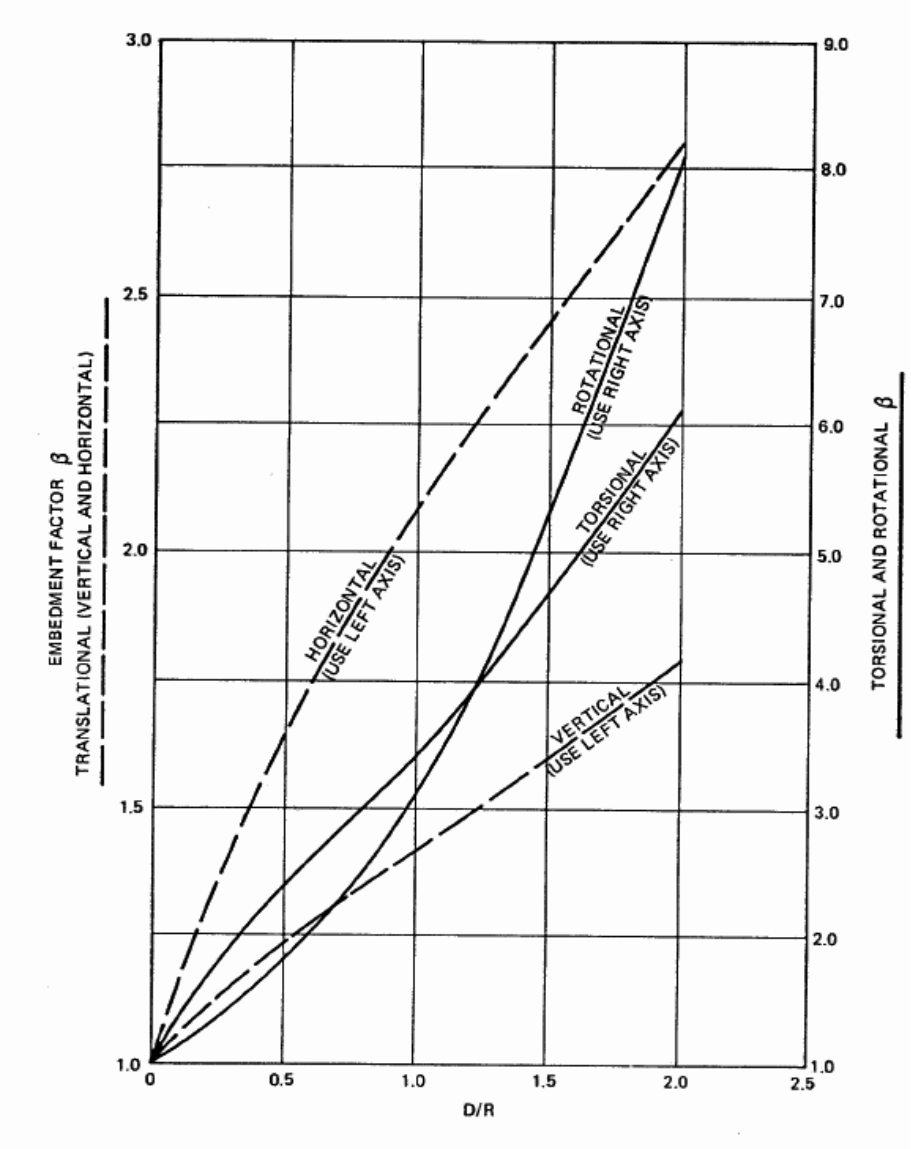

Embedment Factor
Figure 7.2.7-4

7.3 Column Design

7.3.1 Preliminary Plan Stage

The preliminary plan stage determines the initial column size, column spacing, and bridge span length based on a preliminary analysis. Columns are spaced to give maximum structural benefit except where aesthetic considerations dictate otherwise. Piers normally are spaced to meet the geometric and aesthetic requirements of the site and to give maximum economy for the total structure. Good preliminary engineering judgment results in maximum economy for the total structure.

The designer may make changes after the preliminary plan stage. The design unit supervisor will need to review all changes, and if the changes are more than minor dimension adjustments, the Bridge Projects Engineer and the State Bridge and Structures Architect will also need to be involved in the review.

Tall piers spaced farther apart aesthetically justify longer spans. Difficult and expensive foundation conditions will also justify longer spans. Span lengths may change in the design stage if substantial structural improvement and/or cost savings can be realized. The designer should discuss the possibilities of span lengths or skew with the supervisor as soon as possible. Changes in pier spacing at this stage can have significant negative impacts to the geotechnical investigation.

Column spacing should minimize column dead load moments. Multiple columns are better suited for handling lateral loads due to wind and/or earthquake. The designer may alter column size or spacing for structural reasons or change from a single-column pier to a multicolumn pier.

7.3.2 General Column Criteria

Columns should be designed so that construction is as simple and repetitious as possible. The diameter of circular columns should be a multiple of one foot. Rectangular sections should have lengths and widths that are multiples of 3 inches. Long rectangular columns are often tapered to reduce the amount of column reinforcement required for strength. Tapers should be linear for ease of construction.

Understanding the effects on long columns due to applied loads is fundamental in their design. Loads applied to the columns consist of reactions from loads applied to the superstructure and loads applied directly to the columns. For long columns, it may be advantageous to reduce the amount of reinforcement as the applied loads decrease along the column. In these cases, load combinations need to be generated at the locations where the reinforcement is reduced.

A. Construction Joints

Bridge Plans shall show column construction joints at the top of footing or pedestal and at the bottom of crossbeam. Optional construction joints with roughened surfaces should be provided at approximately 30-foot vertical spacing.

B. Modes of Failure

A column subject to axial load and moment can fail in several modes. A “short” column can fail due to crushing of the concrete or to failure of the tensile reinforcement. A “long” column can fail due to elastic buckling even though, in the initial stages, stresses are well within the normal allowable range. Long column failure is normally a combination of stability and strength failure that might occur in the following sequence:

1. Axial load is applied to the column.
2. Bending moments are applied to the column, causing an eccentric deflection.

3. Axial loads act eccentrically to the new column center line producing P-Δ moments which add directly to the applied moments.
4. P-Δ moments increase the deflection of the column and lead to more eccentricity and moments.
5. The P-Δ analysis must prove the column loading and deflection converges to a state where column stresses are acceptable. Otherwise, the column is not stable and failure can be catastrophic.

C. Bridge vs. Building Columns

Unlike building columns, bridge columns are required to resist lateral loads through bending and shear. As a result, these columns may be required to resist relatively large applied moments while carrying nominal axial loads. In addition, columns are often shaped for appearance. This results in complicating the analysis problem with non-prismatic sections.

7.3.3 Column Design Flow Chart – Non-Seismic Design

Figure 7.3.3-1 illustrates the basic steps in the column design process for non-seismic design.

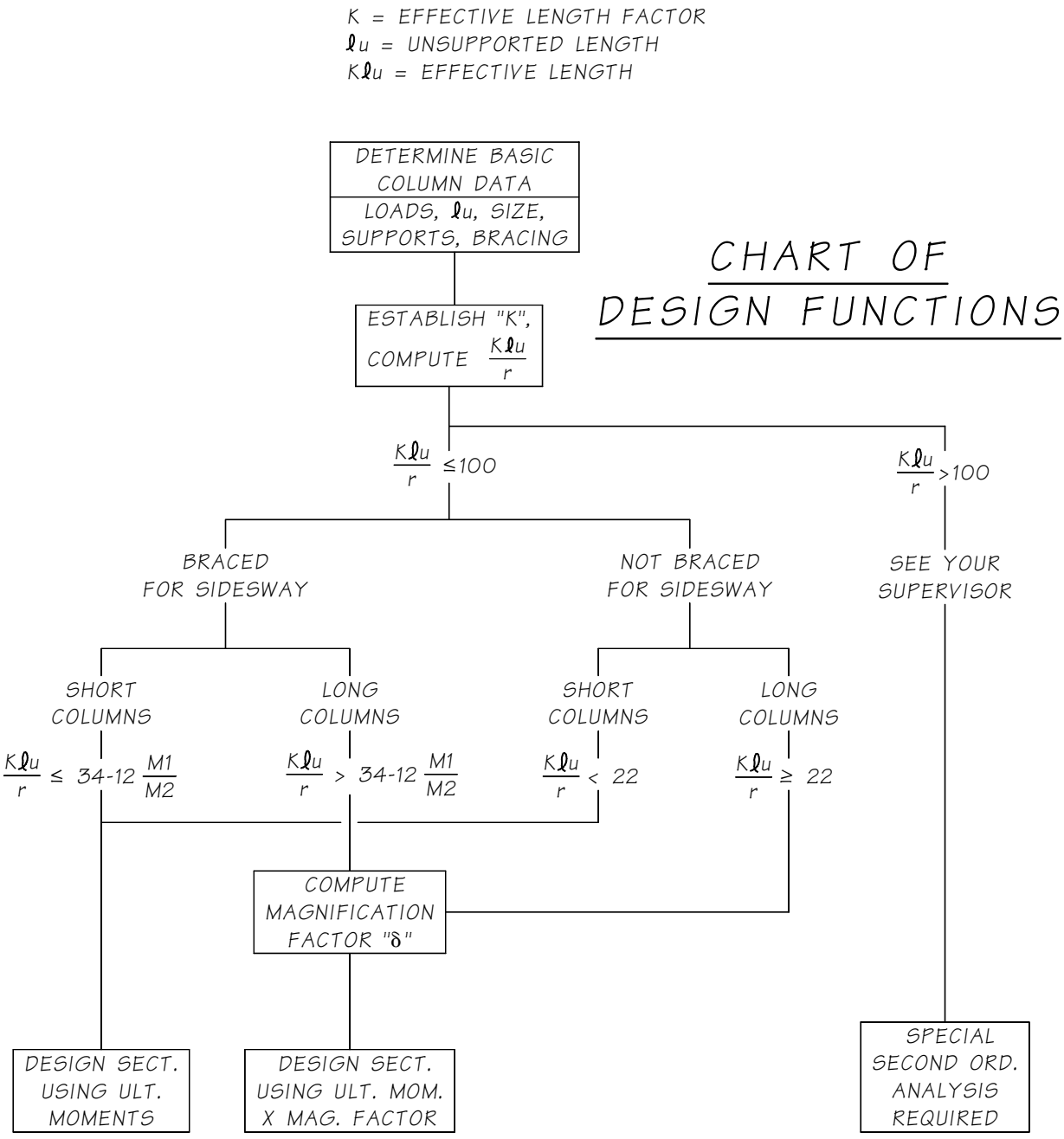
K = EFFECTIVE LENGTH FACTOR
ℓu = UNSUPPORTED LENGTH
Kℓu = EFFECTIVE LENGTH
DETERMINE BASIC COLUMN DATA
LOADS, ℓu, SIZE, SUPPORTS, BRACING
CHART OF DESIGN FUNCTIONS
ESTABLISH "K", COMPUTE Kℓu/r
Kℓu/r ≤100
Kℓu/r >100
BRACED FOR SIDESWAY
NOT BRACED FOR SIDESWAY
SEE YOUR SUPERVISOR
SHORT COLUMNS
LONG COLUMNS
SHORT COLUMNS
LONG COLUMNS
Kℓu/r ≤ 34-12 M1/M2
Kℓu/r > 34-12 M1/M2
Kℓu/r < 22
Kℓu/r ≥ 22
COMPUTE MAGNIFICATION FACTOR "δ"
DESIGN SECT. USING ULT. MOMENTS
DESIGN SECT. USING ULT. MOM. X MAG. FACTOR
SPECIAL SECOND ORD. ANALYSIS REQUIRED

Figure 7.3.3-1

7.3.4 Slenderness Effects

This BDM section supplements and clarifies AASHTO specifications. The goal of a slenderness analysis is to estimate the additional bending moments in the columns that are developed due to axial loads acting upon a deflected structure. Two primary analysis methods exist: the moment magnifier method and the second-order analysis. The designer must decide which method to use based upon the slenderness ratio (kLu/r) of the column(s).

Method 1: Allowed if kLu/r < 100. BDM Section 7.3.5 discusses the approximate moment magnifier method that is generally more conservative and easier to apply.

Method 2: Recommended by AASHTO for all situations and is mandatory for $kL_u/r > 100$. BDM Section 7.3.6 discusses a second-order structural analysis that accounts directly for the axial forces and can lead to significant economy in the final structure.

In general, tall thin columns and piles above ground (pile bents) are considered unbraced and larger short columns are considered braced.

A. Braced or Unbraced Columns

In a member with loads applied at the joints, any significant deflection “side ways” indicated the member is unbraced. The usual practice is to consider the pier columns as unbraced in the transverse direction. The superstructure engages girder stops at the abutment and resists lateral sidesway due to axial loads. However, pier lateral deflections are significant and are considered unbraced. Short spanned bridges may be an exception.

Most bridge designs provide longitudinal expansion bearings at the end piers. Intermediate columns are considered unbraced because they must resist the longitudinal loading. The only time a column is braced in the longitudinal direction is when a framed bracing member does not let the column displace more than L/1500. L is the total column length. In this case, the bracing member must be designed to take all of the horizontal forces.

7.3.5 Moment Magnification Method

The moment magnification method is described in AASHTO LRFD Article 4.5.3.2.2. The following information is required.

- Column geometry and properties: E, I, Lu, and k.
- All Strength loads obtained from conventional elastic analyses using appropriate stiffness and fixity assumptions and column under strength factor (ϕ).

Computations of effective length factors, k, and buckling loads, Pc, are not required for a second-order analysis, though they may be helpful in establishing the need for such an analysis. In general, if magnification factors computed using the AASHTO Specifications are found to exceed about 1.4, then a second-order analysis may yield substantial benefits.

7.3.6 Second-Order Analysis

A second-order analysis that includes the influence of axial loads on the deflected structure is required under certain circumstances, and may be advisable in others. It can lead to substantial economy in the final design of many structures. The designer should discuss the situation with the supervisor before proceeding with the analysis. The ACI Building Code (ACI 318 R-02, section 10.13.4.1) should be consulted when carrying out a second-order analysis.

For columns framed together, the entire frame should be analyzed as a unit. Analyzing individual columns result in overly conservative designs for some columns and non-conservative results for others. This is a result of redistribution of the lateral loads in response to the reduced stiffness of the compression members. For example, in a bridge with long, flexible columns and with short, stiff columns both integrally connected to a continuous superstructure, the stiff columns will tend to take a larger proportion of the lateral loading as additional sidesway under axial loads occurs.

A. Design Methods for a Second-Order Analysis

The preferred method for performing a second-order analysis of an entire frame or isolated single columns is to use a nonlinear finite element program, such as GTSTRUDL, with appropriate stiffness and restraint assumptions. The factored group loads are applied to the frame, including the self-weight of the columns. The model is then analyzed using the nonlinear option available in GTSTRUDL. The final design moments are obtained directly from the analysis.

P-Δ moments are added to the applied moments using an iterative process until stability is reached. The deflections should converge within 5% of the total deflection. Analysis must include the effect of the column weight; therefore, the axial dead load must be adjusted as follows:

$P_u = P_u + ⅓$ (factored column weight).

B. Applying Factored Loads

For a second-order analysis, loads are applied to the structure and the analysis results in member forces and deflections. It must be recognized that a second-order analysis is non-linear and the commonly assumed principle of superposition may not be applicable. The loads applied to the structure should be the entire set of factored loads for the load group under consideration. The analysis must be repeated for each group load of interest. The problem is complicated by the fact that it is often difficult to predict in advance which load groups will govern.

For certain loadings, column moments are sensitive to the stiffness assumptions used in the analysis. For example, loads developed as a result of thermal deformations within a structure may change significantly with changes in column, beam, and foundation stiffness. Accordingly, upper and lower bounds on the stiffness should be determined and the analysis repeated using both sets to verify the governing load has been identified.

C. Member Properties

As with a conventional linear elastic frame analysis, various assumptions and simplifications must be made concerning member stiffness, connectivity, and foundation restraint. Care must be taken to use conservative values for the slenderness analysis. Reinforcement, cracking, load duration, and their variation along the members are difficult to model while foundation restraint will be modeled using soil springs.

7.3.7 Shear Design

Shear design should follow the "Simplified Procedure for Nonprestressed Sections" in AASHTO LRFD Article 5.8.3.4.1.

7.4 Column Reinforcement

7.4.1 Reinforcing Bar Material

In accordance with Standard Specification Section 9-07.2, steel reinforcing bars for all bridge substructure elements (precast and cast-in-place) shall be ASTM A 706 only. ASTM A 706 specifications were developed for seismic applications and place limits on yield and tensile strengths. Also, chemistry is controlled to facilitate welding.

ASTM A 706 is available in sizes from #4 to #18 in straight bars and #3 to #6 in spirals.

7.4.2 Longitudinal Reinforcement Ratio

The reinforcement ratio is the steel area divided by the gross area of the section (As/Ag). The maximum reinforcement ratio shall be 0.06. However, generally the reinforcement ratio should not exceed 0.04. The minimum reinforcement ratio shall be 0.01.

If oversized columns are used for architectural reasons, the minimum reinforcement ratio of the gross section may be reduced to 0.005, provided all loads can be carried on a reduced section with similar shape and the reinforcement ratio of the reduced section is equal to or greater than 0.01. The column dimensions are to be reduced by the same ratio to obtain the similar shape. The reduced section properties are not used for modeling.

7.4.3 Longitudinal Splices

In general, column longitudinal reinforcement shall not be spliced at points of maximum moment, plastic hinge locations, or in columns less than 30 feet long between the top of footing, or shaft, and the bottom of crossbeam. The Bridge Plans must show splice location, length, and optional weld details. Standard Specification Section 6-02.3(24)F covers requirements for mechanical splices.

Column longitudinal reinforcement splices shall be staggered. For column intermediate construction joints, the shortest staggered lap bar shall project above the joint 60 bar diameters or 20 bar diameters for welded splices. Figure 7.4.3-1 shows the standard practice for staggered lap splice locations.

Splices of # 11 and smaller bars may use lap slices. When space is limited, #11 and smaller bars can use welded splices, an approved mechanical butt splice, or the top bar can be bent inward (deformed by double bending) to lie inside and parallel to the bars below. When the bar size exceeds #11, a welded splice or an approved mechanical butt splice is required. The smaller bars in the splice determine the type of splice required.

Splices should be detailed to fall within the middle one-half of the column to avoid splices in plastic hinge zones. However, in extremely tall columns where a 60-foot bar cannot reach the middle half, splices should not be closer than 30 feet from the columns ends.

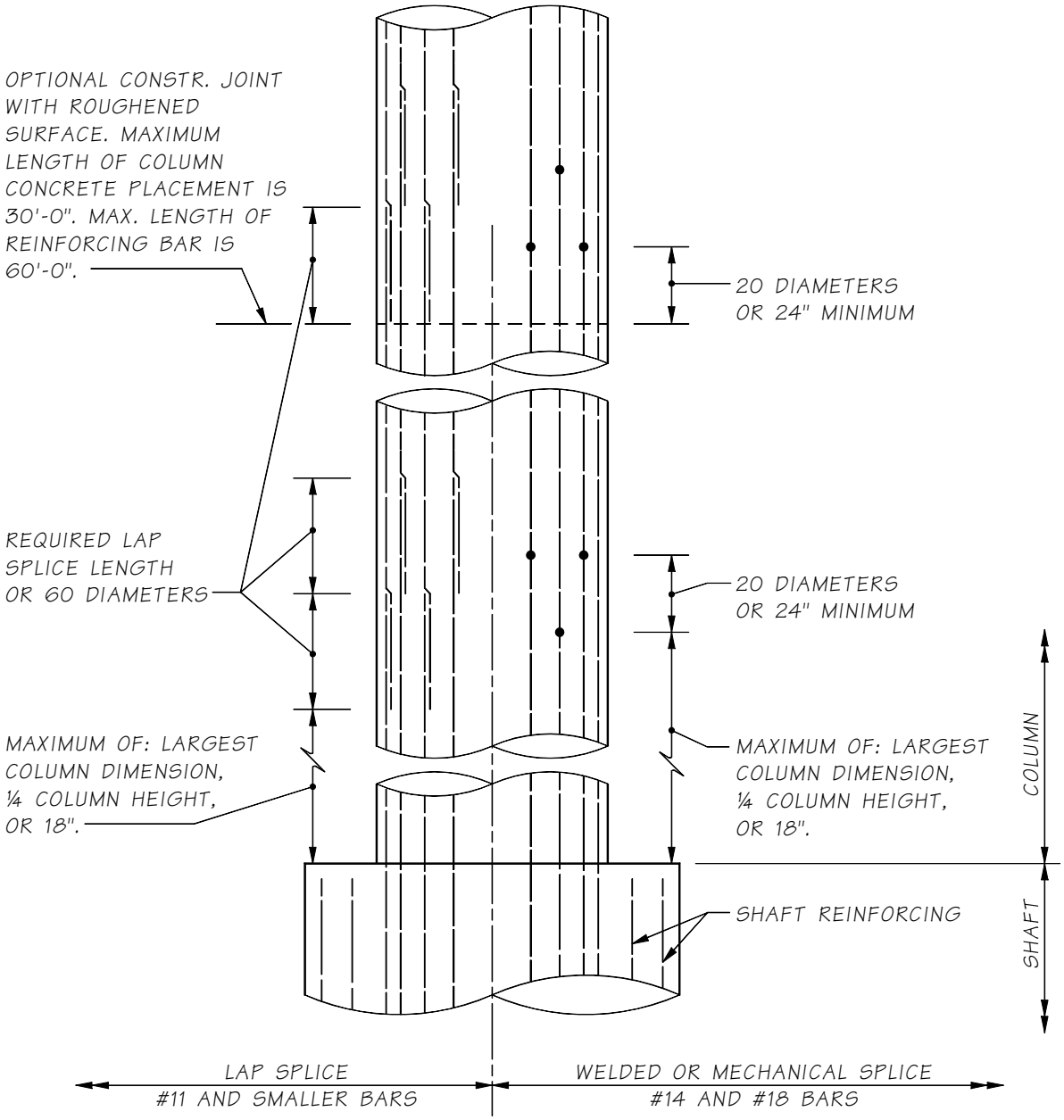
OPTIONAL CONSTR. JOINT WITH ROUGHENED SURFACE. MAXIMUM LENGTH OF COLUMN CONCRETE PLACEMENT IS 30'-0". MAX. LENGTH OF REINFORCING BAR IS 60'-0".
20 DIAMETERS OR 24" MINIMUM
REQUIRED LAP SPLICE LENGTH OR 60 DIAMETERS
20 DIAMETERS OR 24" MINIMUM
MAXIMUM OF: LARGEST COLUMN DIMENSION, ¼ COLUMN HEIGHT, OR 18".
MAXIMUM OF: LARGEST COLUMN DIMENSION, ¼ COLUMN HEIGHT, OR 18".
COLUMN
SHAFT REINFORCING
SHAFT
LAP SPLICE #11 AND SMALLER BARS
WELDED OR MECHANICAL SPLICE #14 AND #18 BARS

Figure 7.4.3-1

7.4.4 Longitudinal Development

A. Crossbeams

Development of longitudinal reinforcement shall be in accordance with Article 8.8.4 of the AASHTO Guide Specifications for LRFD Seismic Bridge Design.

A detail showing horizontal lower crossbeam reinforcement and vertical column reinforcement is preferred but not required.

B. Footings

Longitudinal reinforcement at the bottom of a column should extend into the footing and rest on the bottom mat of footing reinforcement with standard 90° hooks. In addition , development of longitudinal reinforcement shall be in accordance with Article 8.8.4 of the AASHTO Guide Specifications for LRFD Seismic Bridge Design.

C. Drilled Shafts

Column longitudinal reinforcement in drilled shafts is typically straight. Embedment should be equal to $l_{ns} = l_s + s$ (Noncontact Lap Splices in Bridge Column-Shaft Connections, July 1997), where:

- l_s = lap splice length required by AASHTO LRFD Article 5.11.5.3, or
- $l_s = 1.7l_d$ (for a Class C lap splice) where l_d is the development length of the larger bar
- s = distance between the shaft and column longitudinal reinforcement

Since l_s is a function of l_d, all applicable modification factors for development length, except one, in AASHTO LRFD Article 5.11.2 may be used when calculating l_d. The modification factor in 5.11.2 that allows ld to be decreased by the ratio of (A_s required)/(A_s provided), should not be used. Using this modification factor would imply that the reinforcement does not need to yield to carry the ultimate design load. This may be true in other areas. However, our shaft/column connections are designed to form a plastic hinge, and therefore the reinforcement should have adequate development length to allow the bars to yield.

See Figure 7.4.4-1 for an example of longitudinal development into drilled shafts.

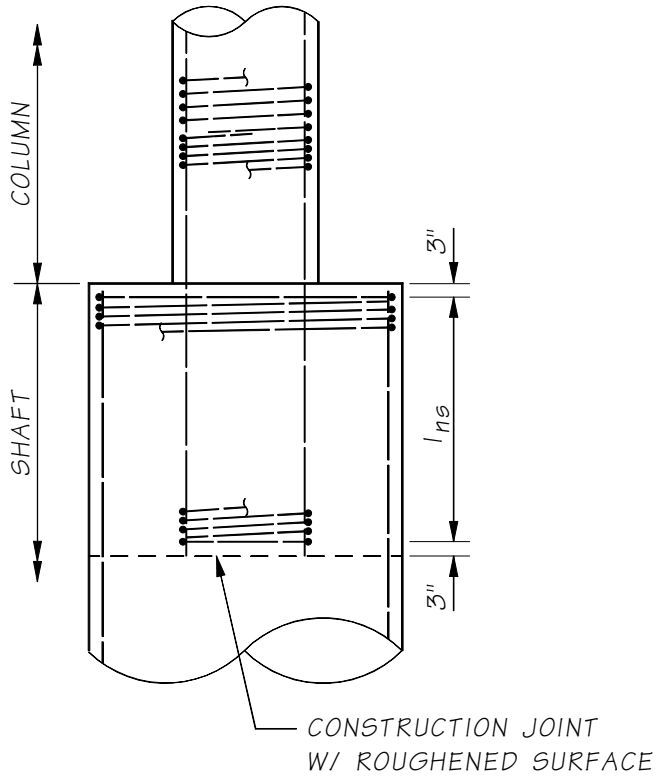

Longitudinal Development Into Drilled Shafts
Figure 7.4.4-1

7.4.5 Transverse Reinforcement

A. General

All columns in high seismic zones shall use spiral transverse reinforcement. Columns in low seismic zones may use spirals or rectangular hoops and crossties. Figures 7.4.5-1 and 7.4.5-2 show transverse reinforcement details for rectangular columns in high and low seismic zones, respectively.

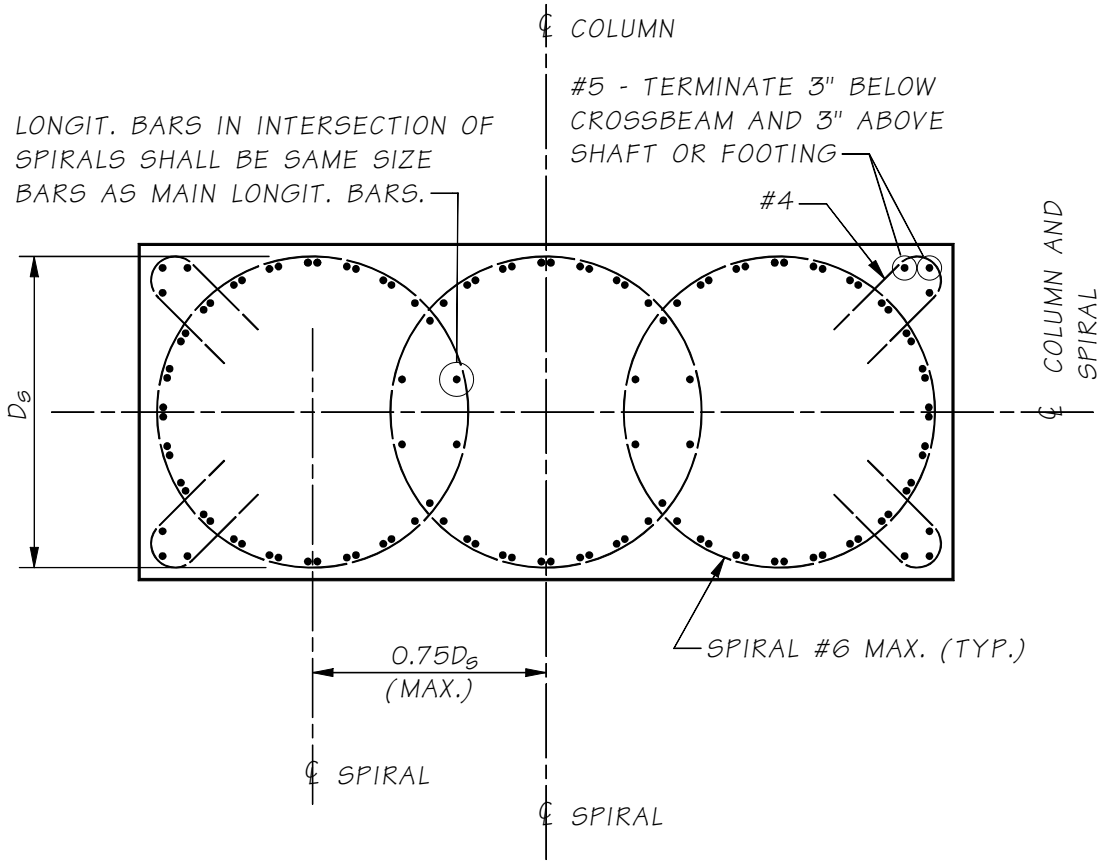

Figure 7.4.5-1

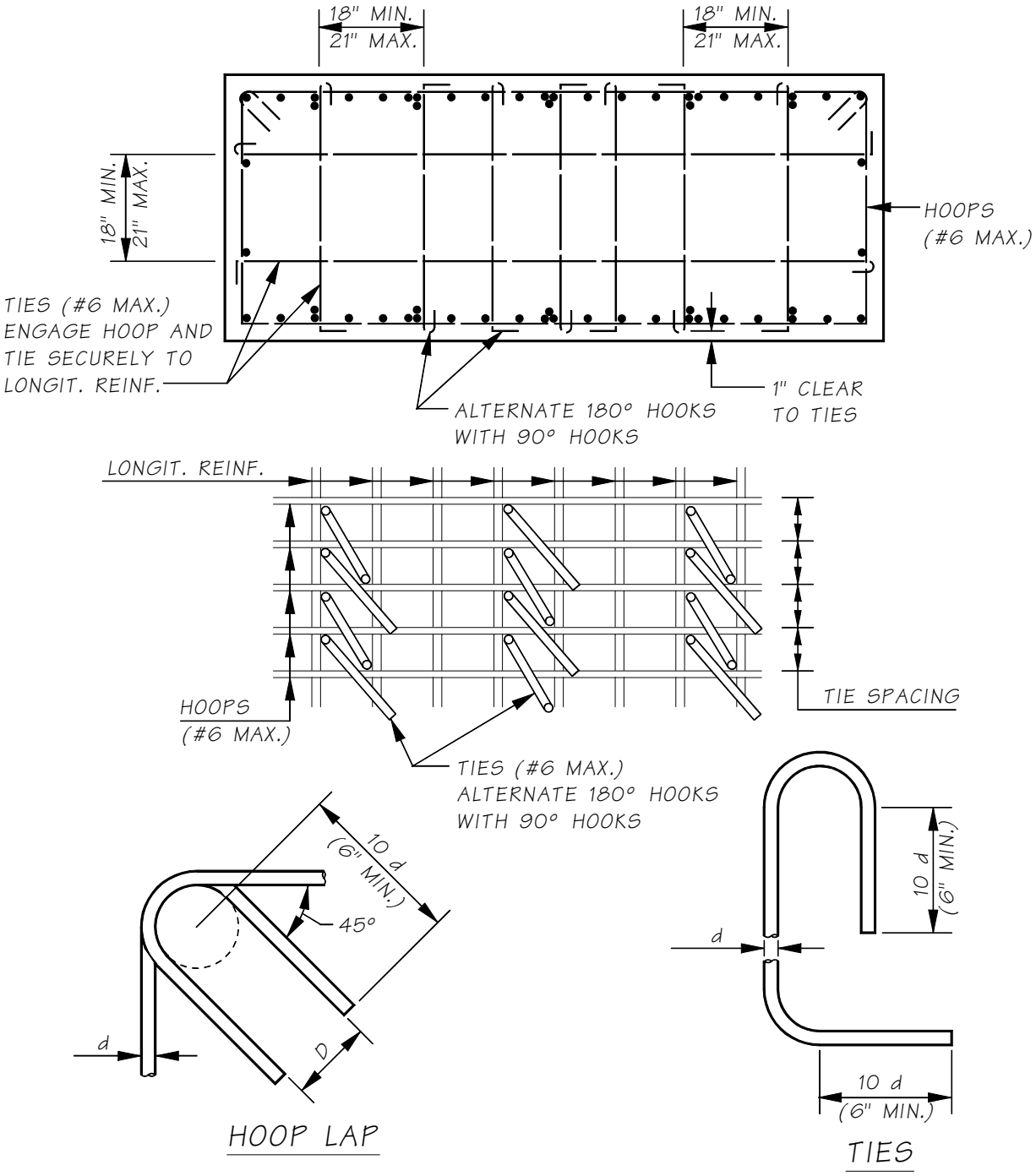
18" MIN.
21" MAX.
18" MIN.
21" MAX.
18" MIN.
21" MAX.
HOOPS
(#6 MAX.)
TIES (#6 MAX.)
ENGAGE HOOP AND
TIE SECURELY TO
LONGIT. REINF.
ALTERNATE 180° HOOKS
WITH 90° HOOKS
1" CLEAR
TO TIES
LONGIT. REINF.
HOOPS
(#6 MAX.)
TIES (#6 MAX.)
ALTERNATE 180° HOOKS
WITH 90° HOOKS
TIE SPACING
10 d
(6" MIN.)
45°
d
D
HOOP LAP
10 d
(6" MIN.)
d
10 d
(6" MIN.)
TIES

Figure 7.4.5-2

B. Spiral Splices

Only welded spiral splices are allowed. If a contractor prefers to use a lap splice, the request will be considered on a case-by-case basis. Only welded spiral splices shall be shown on the plans.

If a lap splice is allowed, only deformed bars (ASTM A 706) shall be used. Plain bars shall not be allowed for lap splices because the lap splice option has only been tested for deformed bars under seismic loads.

Although lap splices are structurally acceptable, and permissible by AASHTO, they cause construction challenges. While casting concrete, tremies get caught in the protruding hooks, making accessibility to all areas and its withdrawal cumbersome.

See Figure 7.4.5-3 for an example of a welded splice detail.

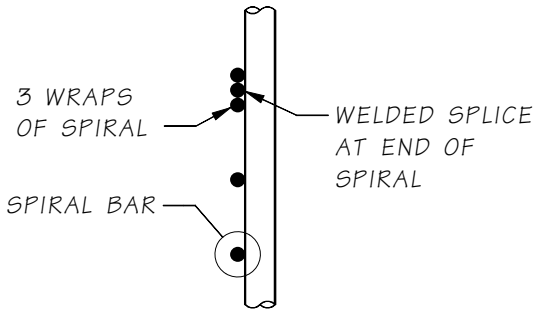

SPIRAL TERMINATION
DETAIL

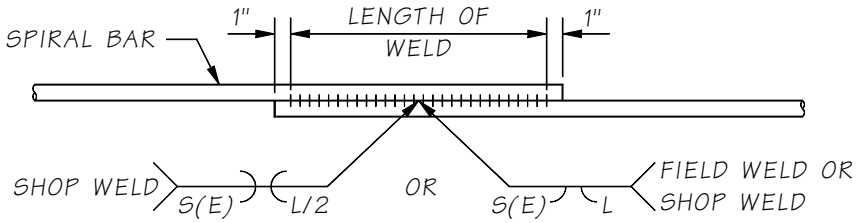

WELDED SPLICE DETAIL

WELDING SHALL MEET THE REQUIREMENTS
OF STD. SPEC. 6-02.3(24)E
FOR WELD DIMENSIONS, SEE TABLE BELOW.

WELD DIMENSIONS

	WELD DIMENSIONS		
	S	E	LENGTH (L)
#4	¼	⅛	4
#5	5⁄16	3⁄16	6
#6	⅜	3⁄16	6

Welded Spiral Splice
Figure 7.4.5-3

7.4.6 Hinge Diaphragms

Hinge diaphragms of the type shown in Figure 7.4.6-1 were built on past WSDOT bridges. Typically they were used above a crossbeam or wall pier. These types of hinges are suitable when widening an existing bridge crossbeam or wall pier with this type of detail.

The area of the hinge bars in square inches is as follows:

$$As = \frac{\frac{(P_u)}{2} + \left[\frac{P_u^2}{4} + V_u^2\right]^{1/2}}{0.85\, F_y \cos\theta}$$

Where:

P_u is the factored axial load
V_u is the factored shear load
F_y is the reinforcing yield strength (60 ksi)
θ is the angle of the hinge bar to the vertical

The development length required for the hinge bars is 1.25 ld. All applicable modification factors for development length in AASHTO LRFD Article 5.11.2 may be used when calculating l_d. Tie and spiral spacing should conform to AASHTO LRFD confinement and shear requirements. Ties and spirals should not be spaced more than 12 inches (6 inches if longitudinal bars are bundled). Premolded joint filler should be used to assure the required rotational capacity. There should also be a shear key at the hinge bar location.

When the hinge reinforcement is bent, additional confinement reinforcing may be necessary to take the horizontal component from the bent hinge bars. The maximum spacing of confinement reinforcing for the hinge is the smaller of that required above and the following:

$$S_{max} = \frac{A_v F_y}{\left[\frac{P_u \tan\theta}{0.85\, l_h} + \frac{V_s}{d}\right]}$$

Where:

A_v, V_s, and d are as defined in AASHTO Article “Notations” and 1h is the distance from the hinge to where the bend begins.
Continue this spacing one-quarter of the column width (in the plane perpendicular to the hinge) past the bend in the hinge bars.

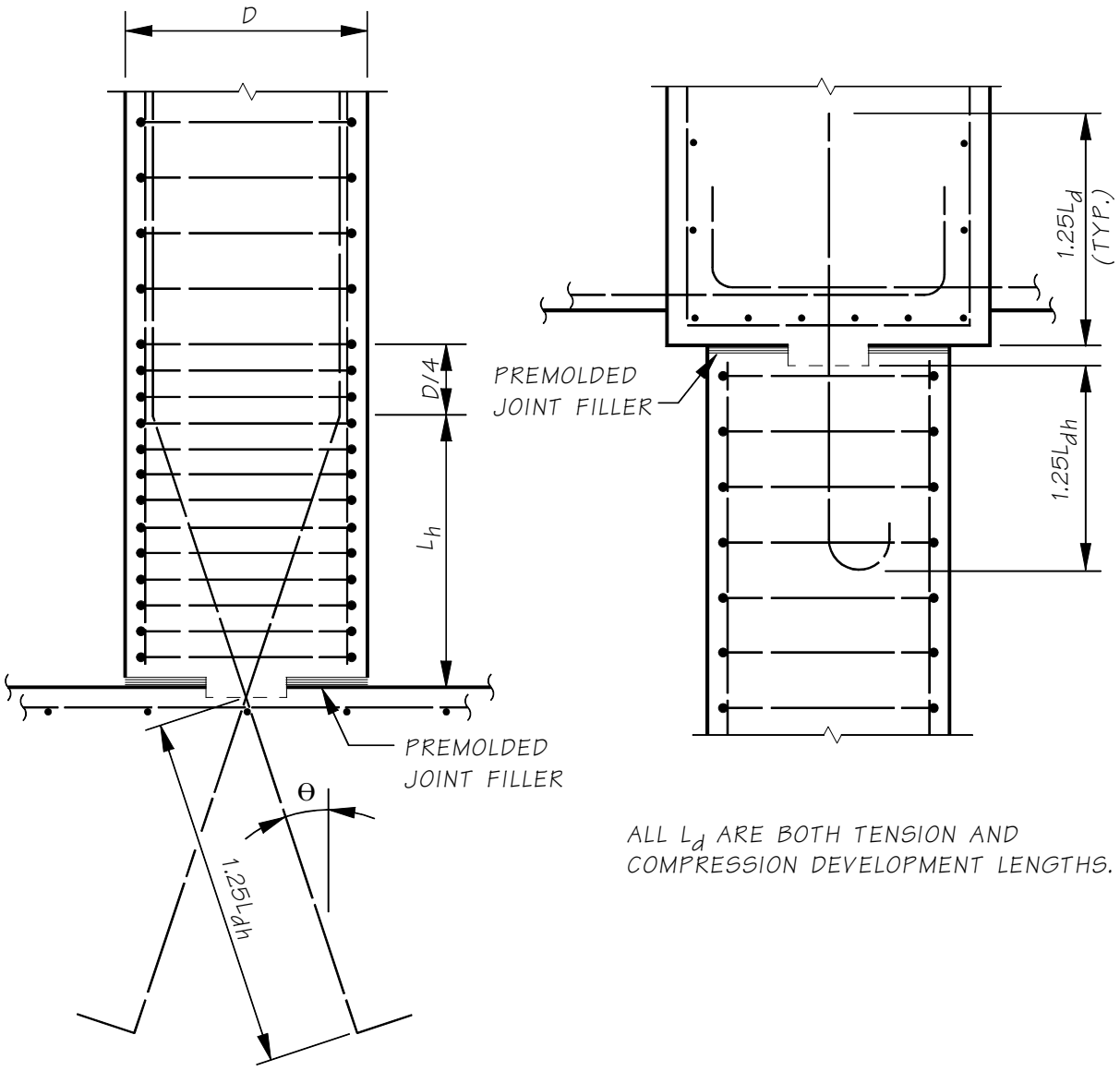

Hinge Details
Figure 7.4.6-1

7.4.7 Column Hinges

Column hinges should be detailed as shown in Figure 7.4.7-1. Details of this design can be found in "Seismic Design of Bridges Design Example No. 4" (FHWA –SA-97-009). This example is for a hinge at the bottom of a column and is based on AASTHTO Load Factor Design. New designs may use this type of connection at the top and bottom of a column but shall be modified appropriately to follow the current AASHTO Load and Resistance Factor Design Specifications, including the AASHTO Guide Specifications for LRFD Seismic Bridge Design.

In particular the following guidelines shall be followed when designing these types of column connections:

A. The inner core, or hinge, shall not be idealized as a hinge and must be designed to resist all bending moment demands from Strength and Service Load Combinations. The inner core, or hinge, shall only be idealized and designed as a hinge for seismic loading.

B. The inner core longitudinal reinforcement and spiral shall be designed for column axial load and interface shear friction requirements.

C. The resistance factor used to design the inner core, or hinge, shall be that for compression controlled sections in AASHTO LRFD Article 5.5.4.2.1 in all seismic zones. Currently the resistance factor for compression controlled sections is 0.75.

D. The column above or below this connection shall be designed as typical column. All specifications pertaining to resistance factors shall apply.

E. Design of the non-contact lap splice between the column reinforcement and hinge reinforcement shall follow the requirements for single column/single shafts. Specifically, the spiral pitch in the column shall follow the requirements of BDM Section 7.8.2 and the development length of the hinge longitudinal reinforcement shall follow the requirements of BDM Section 7.4.4.

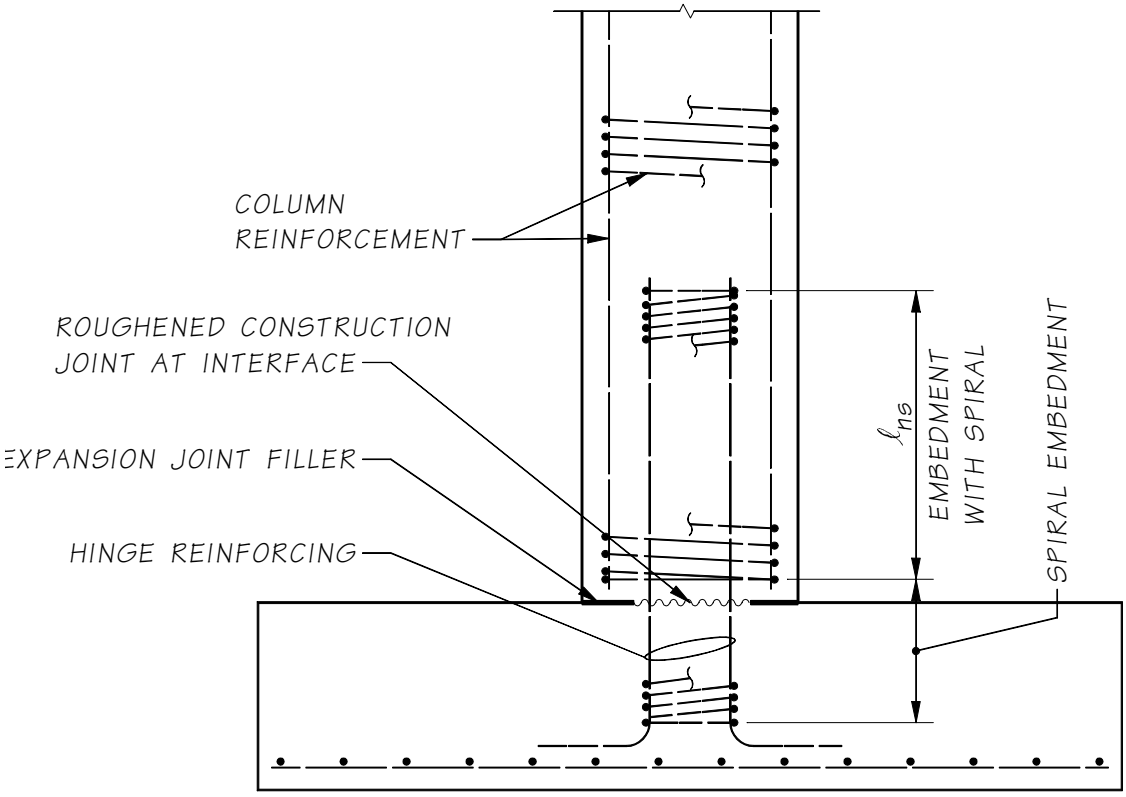

Pinned Column Base
Figure 7.4.7-1

7.5 Abutment Design and Details

7.5.1 Abutment Types

There are four abutment types described in the following section that have been used by the Bridge and Structures Office. The representative types are intended for guidance only and may be varied to suit the requirements of the bridge being designed.

A. Stub Abutments

Stub abutments are short abutments where the distance from the girder seat to top of footing is less than approximately 4 feet, see Figure 7.5.1-3. The footing and wall can be considered as a continuous inverted T-beam. The analysis of this type abutment shall include investigation into both bending and shear stresses parallel to centerline of bearing. If the superstructure is relatively deep, earth pressure combined with longitudinal forces from the superstructure may become significant.

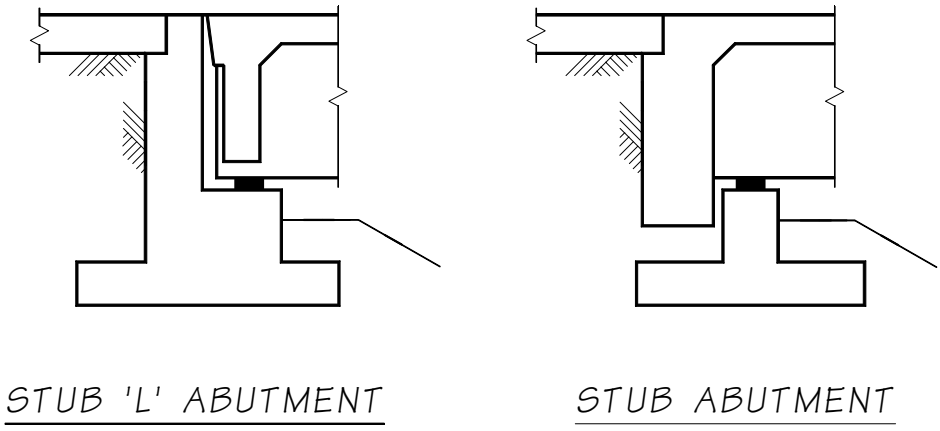

Figure 7.5.1-3

B. Cantilever Abutments

If the height of the wall from the bearing seat down to the bottom of the footing exceeds the clear distance between the girder bearings, the assumed 45° lines of influence from the girder reactions will overlap, and the dead load and live load from the superstructure can be assumed equally distributed over the abutment width. The design may then be carried out on a per-foot basis. The primary structural action takes place normal to the abutment, and the bending moment effect parallel to the abutment may be neglected in most cases. The wall is assumed to be a cantilever member fixed at the top of the footing and subjected to axial, shear, and bending loads see Figure 7.5.1-4.

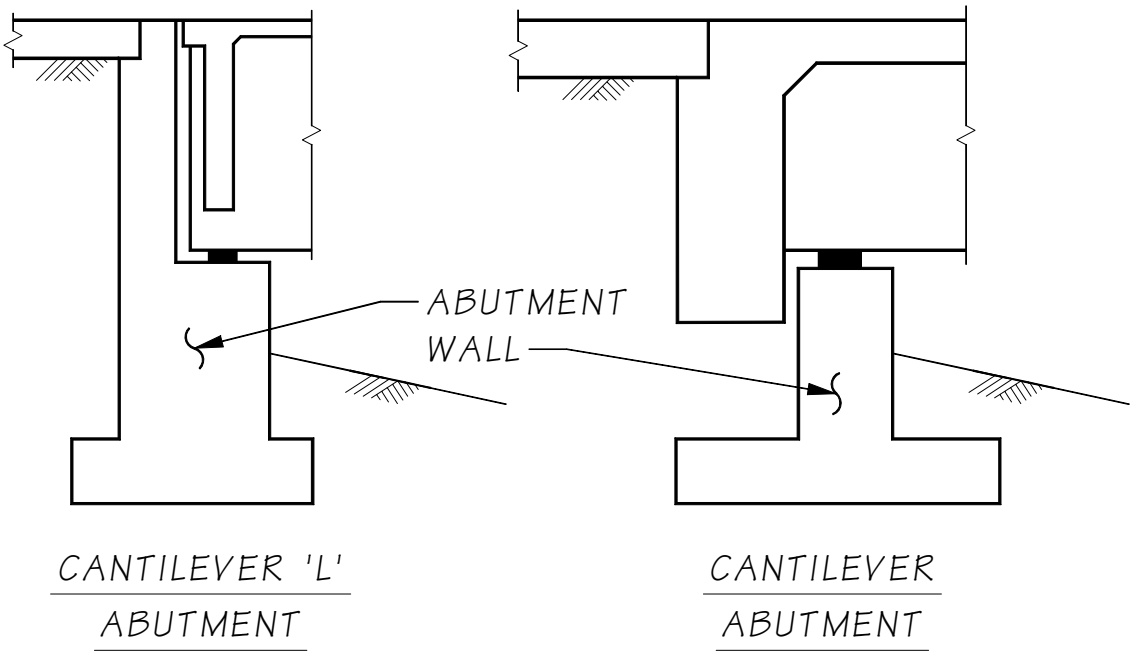

Figure 7.5.1-4

C. Spill-Through Abutments

The analysis of this type of abutment is similar to that of an intermediate pier, see Figure 7.5.1-5. The crossbeam shall be investigated for vertical loading as well as earth pressure and longitudinal effects transmitted from the superstructure. Columns shall be investigated for vertical loads combined with horizontal forces acting transversely and longitudinally. For earth pressure acting on rectangular columns, assume an effective column width equal to 1.5 times the actual column width. Short, stiff columns may require a hinge at the top or bottom to relieve excessive longitudinal moments.

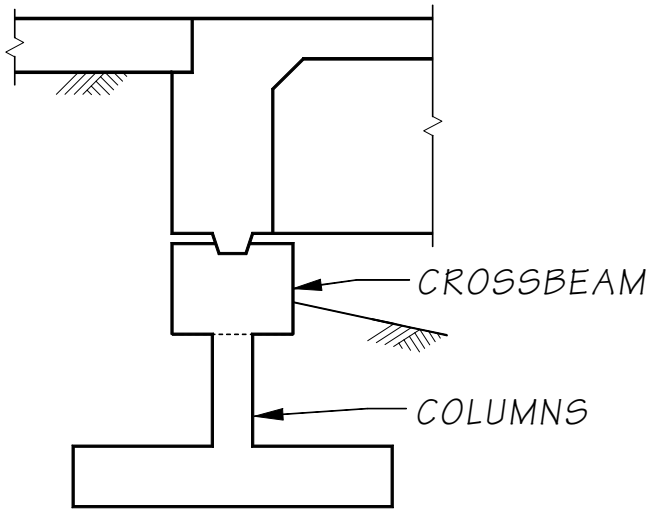

Spill-Through Abutment
Figure 7.5.1-5

D. Rigid Frame Abutments

Abutments that are part of a rigid frame are generically shown in Figure 7.5.1-6. At-Rest earth pressures (EH) will apply to these structures. The abutment design should include the live load impact factor from the superstructure. However, impact shall not be included in the footing design. The rigid frame itself should be considered restrained against sidesway for live load only. AASHTO Chapter 12 addresses loading and analysis of rigid frames that are buried (box culverts).

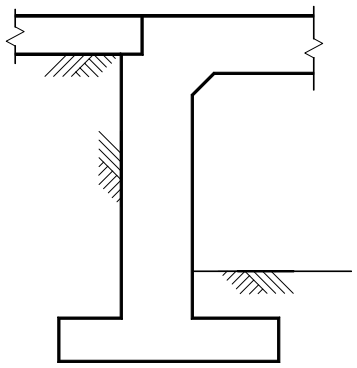

Rigid Frame Abutment
Figure 7.5.1-6

7.5.2 Embankment at Abutments

The minimum clearances for the embankment at the front face of abutments shall be as indicated on Standard Plan H-9. At the ends of the abutment, the fill may be contained with wing walls or in the case of concrete structures, placed against the exterior girders.

7.5.3 Abutment Loading

In general, bridge abutment loading shall be in accordance with AASHTO LRFD Chapter 3. The following simplifications and assumptions may be applied to the abutment design. See Section 7.5 for a force diagram of typical loads as they are applied to an abutment spread footing.

A. Dead load - DC

Approach slab dead load reaction taken as 2 kips/foot of wall applied at the pavement seat.

Active earth pressure (EH) and unit weight of backfill and toe fill (EV) will be provided in a Geotechnical Report. The toe fill should be included in the analysis for overturning if it adds to overturning.

The passive earth pressure exerted by the fill in front of the abutment is usually neglected in the design. The Geotechnical Branch should be contacted to determine if passive resistance might be considered for analysis of sliding stability. Passive resistance in front of footing is not dependable due to potential for erosion, scour, or future excavation in front of footing.

B. Live load - LL

Live load impact does not apply to the abutment. Bridge approach slab live load reaction (without IM) applied at the pavement seat may be assumed to be 4.5 kips per foot of wall for HL-93 loading, see BDM Section 10.6 for bridge approach slab design assumptions. Abutment footing live loads may be reduced (by approximately one axle) if one design truck is placed at the bridge abutment with a bridge approach slab. Adding the pavement seat reaction to the bearing reaction duplicates the axle load from two different design truck configurations.

If bridge approach slabs are not to be constructed in the project (e.g. bride approach slab details are not included in the bridge sheets of the Plans) a live load surcharge (LS) applies.

C. Earthquake Load - EQ

Superstructure loads shall be transmitted to the substructure through bearings, girder stops or restrainers. As an alternate, the superstructure may be rigidly attached substructure.

The horizontal earth pressure load (EQ_{soil}) shall be the Mononobe-Okabe (M-O) active pressure coefficient, as described in the LRFD Chapter 11, Appendix 11.1.1.1. This applies M-O as a uniform pressure to the wall with the resultant force located at 0.5H. For more information on Mononobe-Okabe and AASHTO application, see GDM Section 15.4.2.9.

Footing supported walls and abutments that are free to translate or move during a seismic event shall use Mononobe-Okabe soil pressure. The vertical acceleration, k_v, shall be set equal to 0. This also applies to portions substructure isolated from the superstructure by bearings.

Pile or shaft walls and abutments that are not free to translate or move during a seismic event shall use a horizontal acceleration of 1.5 times peak ground acceleration. The vertical acceleration shall be set equal to 0. See GDM Section 15.4.2.7 for descriptions of flexible and non-yielding walls.

Seismic inertial force of the substructure (EQ_{abut}) is the horizontal acceleration coefficient times the weight of the abutment (including footing). This force acts horizontally in the same direction as the earth pressure, at the mass centroid of the abutment. Seismic inertia force is only applied for stability and sliding analysis. EQ_{abut} shall not be used to determine the reinforcement required in the abutment.

The load factor for all EQ induced loads shall be 1.0, including M-O earth pressure loads.

D. Bearing Forces – TG Strength and Extreme Event II

For strength design, the bearing shear forces should be based on ½ of the seasonal temperature change. This force is applied in the direction that causes the worst case loading.

For extreme event II, calculate the maximum friction force (when the bearing slips) and apply in the direction that causes the worst case loading.

7.5.4 WSDOT Temporary Construction Load Cases

A. Case 1: Superstructure Built after Backfill at Abutment

If the superstructure is to be built after the backfill is placed at the abutments, the resulting temporary loading would be the maximum horizontal force with the minimum vertical force. During the abutment design, a load case shall be considered to check the stability and sliding of abutments after placing backfill but prior to superstructure placement. This load case is intended as a check for a temporary construction stage, and not meant to be a controlling load case that would govern the final design of the abutment and footing. This loading will generally determine the tensile reinforcement in the top of the footing heel.

If this load case check is found to be satisfactory, a note shall be added to the general notes in the contract plans and the contactor will not be required to make a submittal requesting approval for early backfill placement. This load case shall include a 2-foot deep soil surcharge for the backfill placement equipment (LS) as covered by the WSDOT Standard Specification Section 2-03.3(14)I.

B. Case 2: Wingwall Overturning

It is usually advantageous in sizing the footing to release the falsework from under the wing walls after some portion of the superstructure load is applied to the abutment. A note can cover this item, when applicable, in the sequence of construction on the plans.

7.5.5 Abutment Bearings and Girder Stops

All structures shall be provided with some means of restraint against lateral displacement at the abutments due to earthquake, temperature and shrinkage, wind, earth pressure, etc. Such restraints may be in the form of concrete hinges, concrete girder stops with or without vertical elastomeric pads, or pintles in metal bearings. Other solutions are possible. Article “Connection Design Forces” of the Guide Specifications for Seismic Design of Highway Bridges describe longitudinal linkage force and hold-down devices required.

All prestressed girder bridges in Western Washington (within and west of the Cascade mountain range) shall have girder stops between all girders at abutments and intermediate piers. This policy is based on fact that the February 28, 2001 Nisqually earthquake caused significant damage to girder stops at bridges where girder stops were not provided between all girders. In cases where girder stops were cast prior to placement of girders and the 3” grout was placed after setting the girders, the 3” grout pads were severely damaged and were displaced from their original position.

A. Abutment Bearings

The longitudinal forces from the superstructure are normally transferred to the abutments through the bearings. The calculated longitudinal movement shall be used to determine the shear force developed by the bearing pads at the abutments. The Modulus of Elasticity of Neoprene at 70°F (21°C) shall be used for determining the shear force. However, the force transmitted through a bearing pad shall be limited to that which causes the bearing pad to slip. Normally, the maximum load transferred through a teflon sliding bearing is 6 percent and through an elastomeric bearing pad is 20 percent of the dead load reaction of the superstructure. For Extreme Event I, assume the end diaphragm is in contact with abutment wall and no load transfer through the bearings. The bearing force shall not be added to seismic earth pressure forces.

When the force transmitted through the bearing pads is very large, the designer should consider increasing the bearing pad thickness, using TFE sliding bearings and/or utilizing the flexibility of the abutment as a means of reducing the horizontal design force. When the flexibility of the abutment is considered, it is intended that a simple approximation of the abutment deformation be made.

B. Bearing Seats

The bearing seats shall be wide enough to accommodate the size of the bearings used with a minimum edge dimension of 3 in. and satisfy the requirements of LRFD Section 4.7.4.4. On L abutments, the bearing seat should be sloped away from the bearings to prevent a build up or pocket of water at the bearings. The superelevation and profile grade of the structure should be considered for drainage protection. Normally, a ¼ in. drop across the width of the bearing seat is sufficient.

C. Girder Stop Bearings

For skewed structures with earth pressure against the end diaphragm (see Figure 9.3.2-4), the performance of girder stop bearings shall be investigated at Service Limit State. These bearings are placed vertically against the girder stop to transfer the skew component of the earth pressure to the abutment without restricting the movement of the superstructure in the direction parallel to centerline. In some cases bearing assemblies containing sliding surfaces may be necessary to accommodate large superstructure movements.

D. Girder Stop Design

Some type of transverse girder stop is required for all abutments in order to transfer earthquake load from the superstructure to the abutment. The girder stop shall be designed at the Extreme Limit State for the earthquake loading, any transverse earth pressure from skewed abutments, etc. Girder stops are designed using shear friction theory. The possibility of torsion combined with horizontal shear when the load does not pass through the centroid of the girder stop shall also be investigated.

E. Girder Stop Detail

The detail shown in Figure 7.5.5-1 may be used for bridges with no skew. Prestressed girders should be placed in final position before girder stops are cast to eliminate alignment conflicts between prestressed girders and girder stops. All girder stops should provide ⅛ in clearance between the prestressed girder flange and the girder stop.

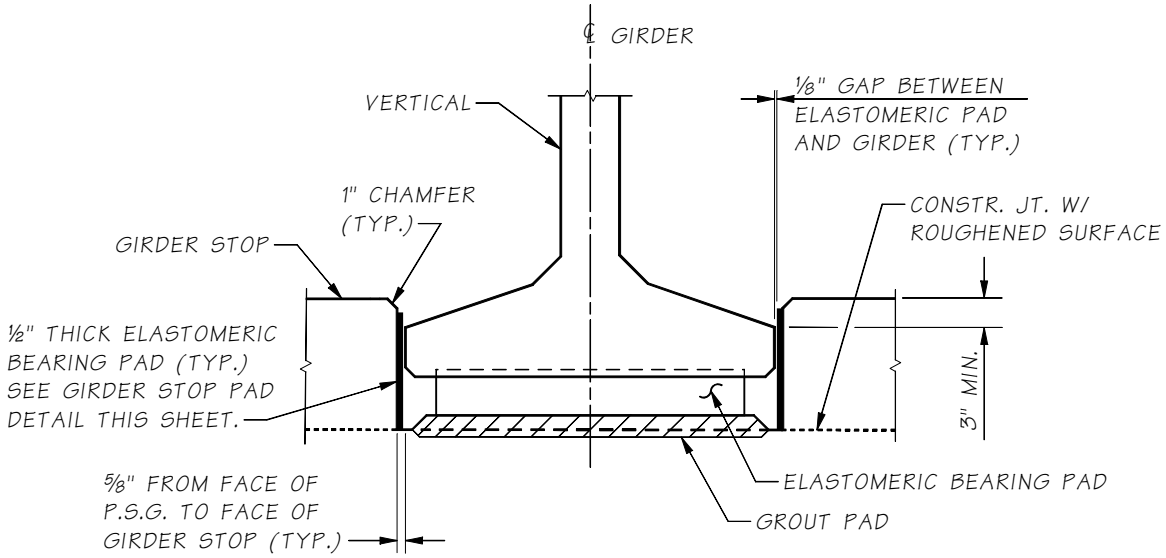

GIRDER STOP DETAIL

NOTE:

1. GIRDER STOPS SHALL BE CONSTRUCTED AFTER PLACEMENT OF PRESTRESSED GIRDERS.
2. ELASTOMERIC PADS BETWEEN GIRDER AND GIRDER STOPS SHALL BE PLACED AFTER CONSTRUCTING THE GIRDER STOPS. THE PADS SHALL BE CEMENTED TO GIRDER STOPS WITH APPROVED RUBBER CEMENT.

Girder Stop Details
Figure 7.5.5-1

7.5.6 Abutment Expansion Joints

For structures without expansion joints, the earth pressure against the end diaphragm is transmitted through the superstructure. The compressibility of the expansion joint shall be considered in the design of the abutment for earthquake, temperature, and shrinkage when these forces increase the design load.

7.5.7 Open Joint Details

Vertical expansion joints extending from the top of footings to the top of the abutment are usually required between abutments and adjacent retaining walls to handle anticipated movements. The expansion joint is normally filled with premolded joint filler which is not water tight. There may be circumstances when this joint must be water tight; ⅛ butyl rubber may be used to cover the joint. The open joint in the barrier should contain a compression seal to create a watertight joint. Figure 7.5.7-1 shows typical details that may be used. Aesthetic considerations may require that vertical expansion joints between abutments and retaining walls be omitted. This is generally possible if the retaining wall is less than 60 feet long.

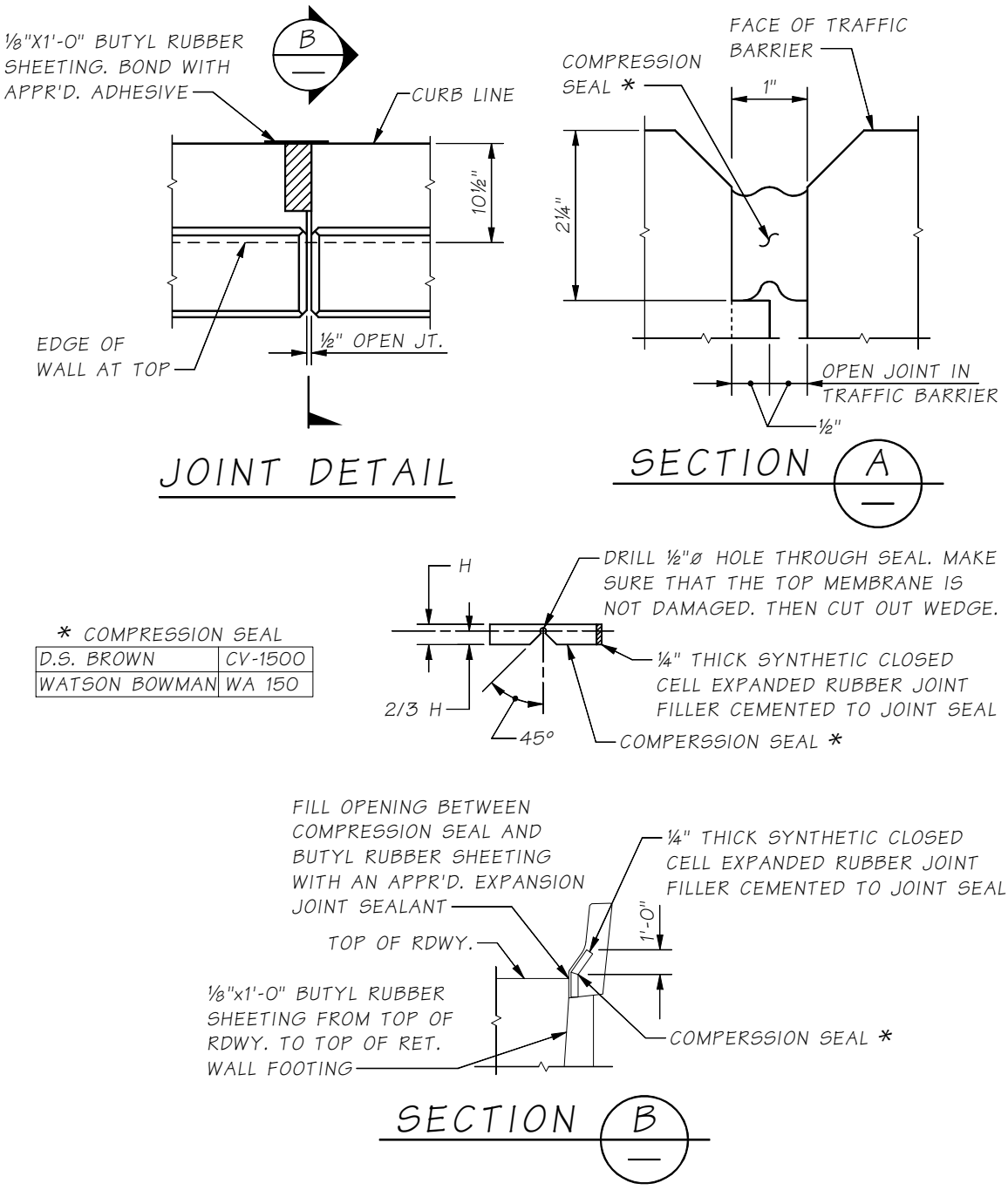

Open Joint Details between Abutment and Retaining Walls
Figure 7.5.7-1

The footing beneath the joint may be monolithic or cast with a construction joint. In addition, dowel bars may be located across the footing joint parallel to the wall elements to guard against differential settlement or deflection.

On abutments with the end diaphragm cast on the superstructure, the open joints must be protected from the fill spilling through the joint. Normally butyl rubber is used to seal the openings. See the end diaphragm details in the Appendices in BDM Chapter 5 for details.

7.5.8 Construction Joints

To simplify construction, vertical construction joints are often necessary, particularly between the abutment and adjacent wing walls. Construction joints should also be provided between the footing and the stem of the wall. Shear keys shall be provided at construction joints between the footing and the stem, at vertical construction joints or at any construction joint that requires shear transfer. The Standard Specifications cover the size and placement of shear keys. The location of such joints shall be detailed on the plans. Construction joints with roughened surface can be used at locations (except where needed for shear transfer) to simplify construction. These should be shown on the plans and labeled “Construction Joint With Roughened Surface.” When construction joints are located in the middle of the abutment wall, a pour strip should be used for a clean joint between pours. Details of the pour strip should be shown in the plans.

7.5.9 Abutment Wall Design

When the primary structural action is parallel to the superstructure or normal to the abutment face, the wall shall be treated as a column subjected to combined axial load and bending moment. Compressive reinforcement need not be included in the design of cantilever walls, but the possibility of bending moment in the direction of the span as well as towards the backfill shall be considered. A portion of the vertical bars may be cut off where they are no longer needed for stress.

A. In general, horizontal reinforcement should be placed outside of vertical reinforcement to facilitate easier placement of reinforcement.

B. Shrinkage and Temperature Reinforcement

   The AASHTO requires a minimum temperature and shrinkage steel of 0.125 sq. in. per foot of wall. This is not sufficient to limit shrinkage cracks in thick walls. A more appropriate minimum temperature and shrinkage steel is taken from the ACI-83, minimum area of reinforcing steel per foot of the wall, in both directions on each face of the wall, shall be 0.011 times the thickness of the wall (in inches), spaced at 12 inches. On abutments that are longer than 60 feet, consideration should be given to have vertical construction joints to minimize shrinkage cracks.

   The minimum cross tie reinforcement in the abutment wall is as follows. #4 tie bars with 180 degree hooks, spaced at approximately 2 feet center to center vertically and at approximately 4 feet center to center horizontally shall be furnished throughout the abutment stem in all but stub abutments, see Figure 7.5.9-1.

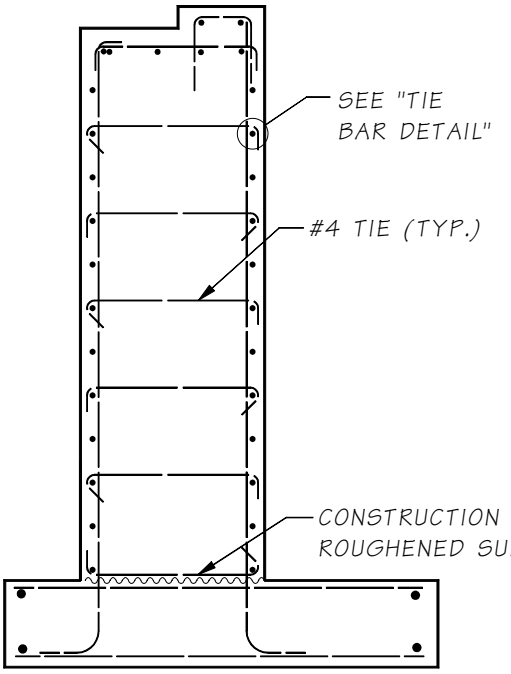

TYPICAL SECTION

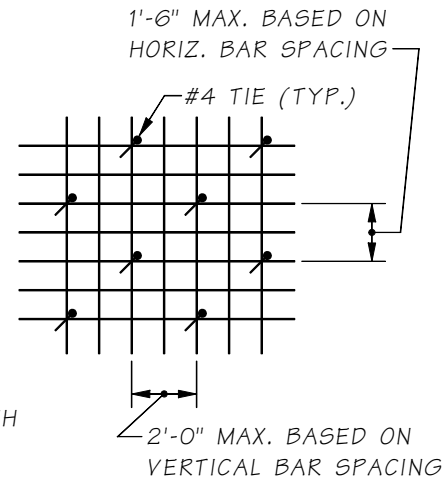

TIE BAR SPACING DETAIL

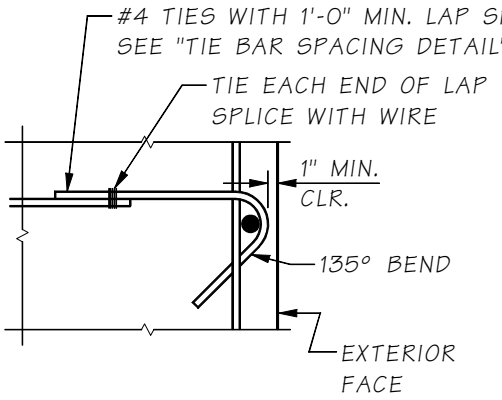

ALTERNATE TIE BAR DETAIL

CONSTANT OR VARIABLE WIDTH SECTION

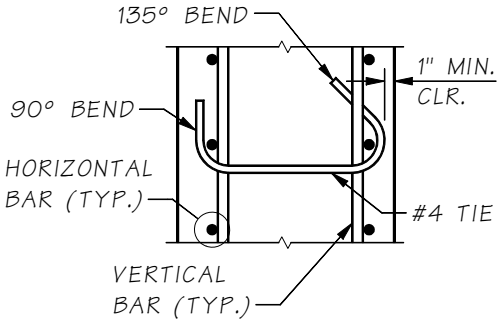

TIE BAR DETAIL

CONSTANT WIDTH SECTION

Cross Tie Details
Figure 7.5.9-1

7.5.10 Drainage and Backfilling

3” diameter weep holes shall be provided in all bridge abutment walls. These shall be located 6 inches above the final ground line at about 12 feet on centers. In cases where the vertical distance between the top of the footing and the bearing seat is greater than 10 feet, additional weep holes shall be provided 6 inches above the top of the footing. No weep holes are necessary in cantilever wing walls where a wall footing is not used.

The details for gravel backfill for wall, underdrain pipe and backfill for drain shall be indicated on the plans. The gravel backfill for wall shall be provided behind all bridge abutments. The underdrain pipe and gravel backfill for drain shall be provided behind all bridge abutments except abutments on fills with a stem wall height of 5 feet or less. When retaining walls with footings are attached to the abutment, a blockout may be required for the underdrain pipe outfall. Cooperation between Bridge and Structures Office and the Design PE Office as to the drainage requirements is needed to guarantee proper blockout locations.

Underdrain pipe and gravel backfill for drain are not necessary behind cantilever wing walls. A 3-foot thickness of gravel backfill for wall behind the cantilever wing walls shall be shown in the plans.

The backfill for wall, underdrain pipe and gravel backfill for drain are not included in bridge quantities, the size of the underdrain pipe should not be shown on the bridge plans, as this is a Design PE Office design item and is subject to change during the design phase. Figure 7.5.10-1 illustrates backfill details.

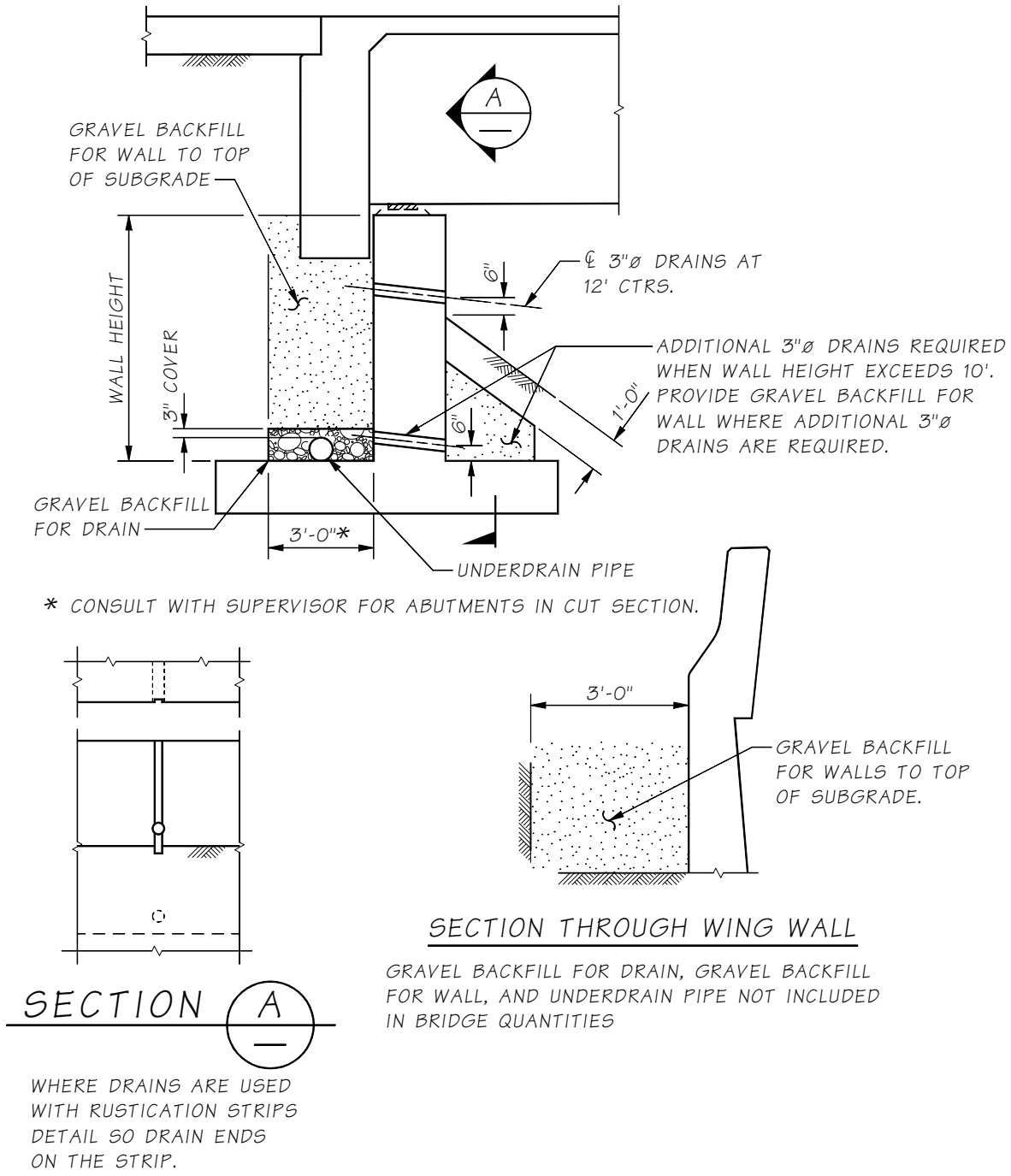

Drainage and Backfill Details
Figure 7.5.10-1

7.6 Wing/Curtain Wall at Abutments

Particular attention should be given to the horizontal reinforcing steel required at fixed corners between abutment and wing/curtain walls. Since wall deflections are zero near the abutment, curtain walls and cantilever wing walls shall assume an At-Rest soil pressure. This increased loading can normally be reduced to an Active soil pressure at a distance (from the corner), equal to the average height of the wall under design. At this distance, the wall deflections are assumed large enough to allow the active state soil pressures to be developed. For the typical abutment, wingwall moments may be assumed to distribute stress to the outer 10 foot portion of the abutment wall. See Geotechnical Design Manual (GDM) Section 15.4.2.7, "Active, Passive, and At-Rest Pressures".

7.6.1 Traffic Barrier Loads

Traffic barriers should be rigidly attached to a bridge approach slab that is cantilevered over the top of a wing/curtain wall or Structural Earth wall. The barrier collision load is applied directly to the bridge approach slab. The yield line theory as specified in AASHTO LRFD Specifications article A13.3 is primarily for traffic barrier on bridge deck slabs and may not be applicable to traffic barrier on less rigid supports, such as retaining walls.

7.6.2 Wingwall Design

The following wingwall design items should be addressed in the Plans.

A. For Strength Design of wingwalls, vertical loads and moments may be distributed over 10 feet of the abutment wall and footing.

B. Footing thickness shall be not less than 1 foot 6 inches.

C. Exterior girder top flanges should be located (at the least) inside the curb line at the end pier.

D. For skewed bridges, modify the details on the traffic barrier and approach slab sheet so the expansion joint detailing agree. List appropriate manufacturers and model numbers for the expansion joint system. Generally, a 1 inch expansion joint with a 1inch open joint in the barrier is shown in the Plans, unless the bridge expansion joint design dictates otherwise.

7.6.3 Wingwall Detailing

All wingwall reinforcement should be a vertical grid and not follow a tapered bottom of wall. This allows for the steel to be placed in two layers that fits better with abutment reinforcing. Existing MicroGDS wingwall sheets conform to the LFD specifications. For consistency in design with the other bridge components, these wingwalls sheets must be re-designed in accordance with the requirements of the AASHTO LRFD Specifications.

7.7 Footing Design

7.7.1 General Footing Criteria

The provisions given in this section pertain to both spread footings and pile supported footings.

A. Minimum Cover and Footing Depth

The Geotechnical Report may specify a minimum footing depth in order to assure adequate bearing pressure. Stream crossings may require additional cover depth as protection against scour. The HQ Hydraulic Section should be consulted on this matter. Footings set too low result in large increases in cost. The end slope on the bridge approach fill is usually set at the preliminary plan stage but affects the depth of footings placed in the fill. Figure 7.7.1-1 illustrates footing criteria when setting footing elevations.

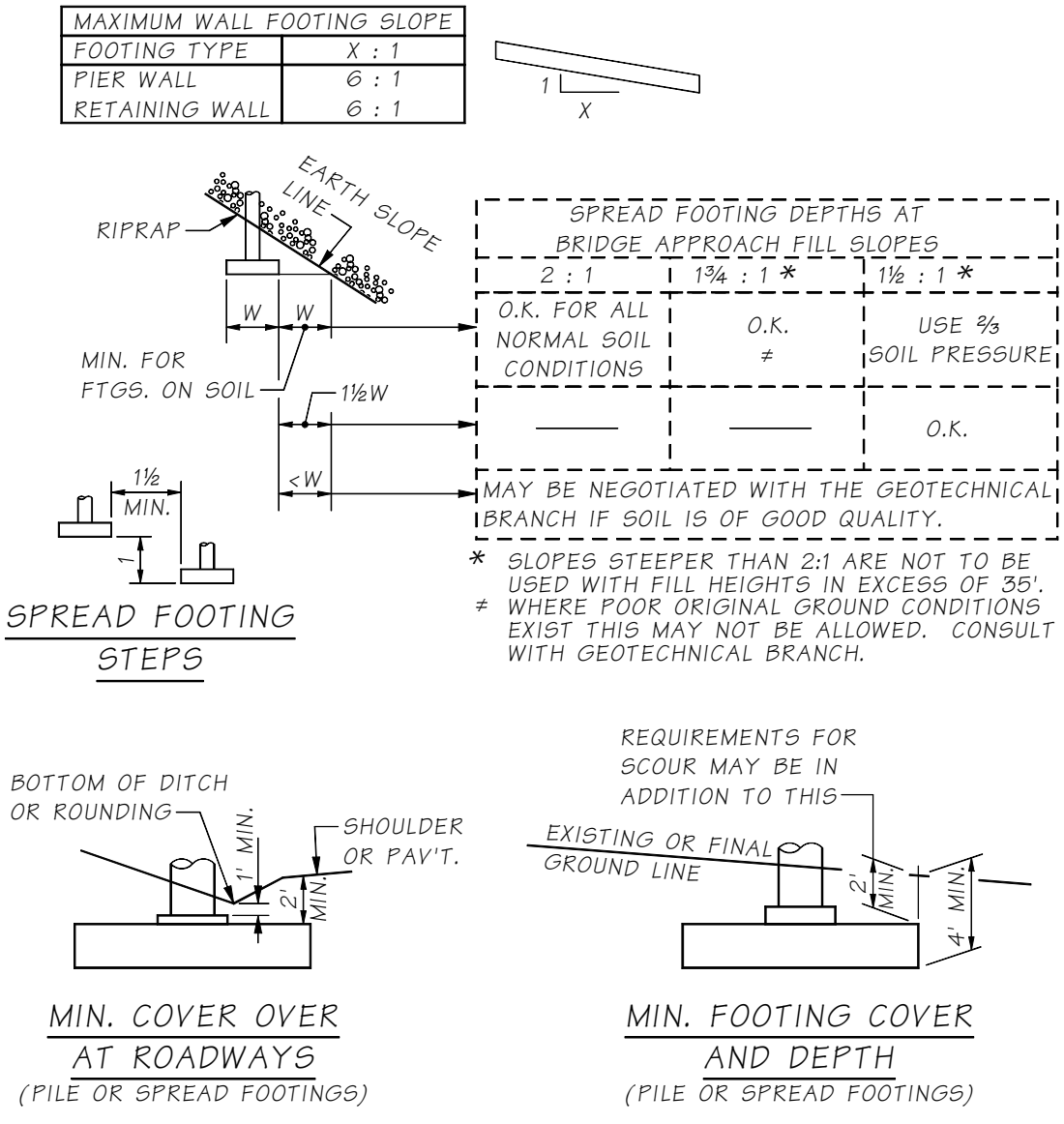

Guidelines for Footing Cover and Depth
Figure 7.7.1-1

B. Pedestals

A pedestal is sometimes used as an extension of the footing in order to provide additional depth for shear near the column. Its purpose is to provide adequate structural depth while saving concrete. For proportions of pedestals, see Figure 7.7.1-2. Since additional forming is required to construct pedestals, careful thought must be given to the trade off between the cost of the extra forming involved and the cost of additional footing concrete. Also, additional foundation depth may be needed for footing cover. Whenever a pedestal is used, the plans shall note that a construction joint will be permitted between the pedestal and the footing. This construction joint should be indicated as a construction joint with roughened surface.

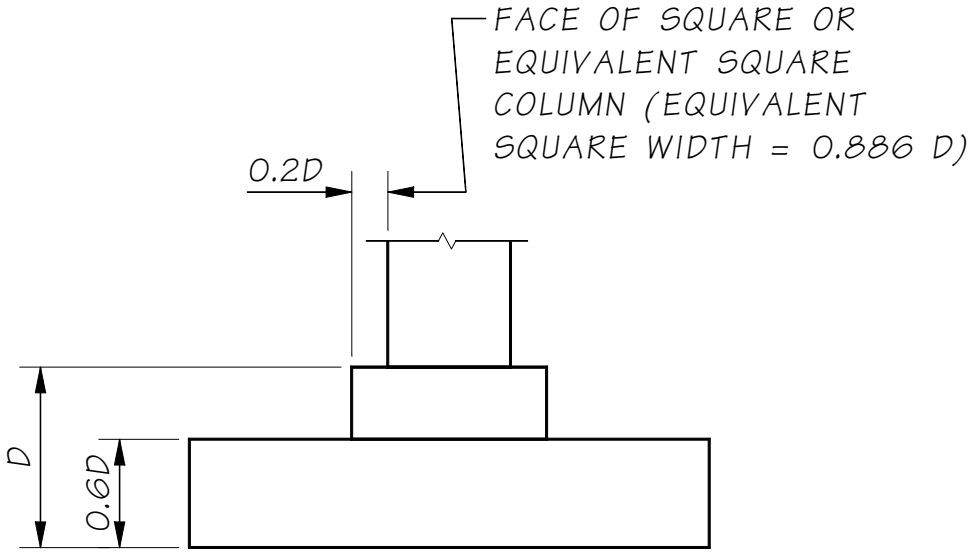

Pedestal Dimensions
Figure 7.7.1-2

7.7.2 Loads and Load Factors

The following Table 7.7.2-1 is a general application of minimum and maximum load factors as they apply to a generic footing design. Footing design must select the maximum or minimum Load Factors for various modes of failure for the Strength and Extreme Event Limit States.

The dead load includes the load due to structural components and non-structural attachments (DC), and the dead load of wearing surfaces and utilities (DW). The live load (LL) does not include vehicular dynamic load allowance (IM).

Designers are to note, if column design uses magnified moments, then footing design must use magnified column moments.

Sliding and Overturning, e_o	Bearing Stress (e_c, s_v)
$LL_{min} = 0$	LL_{max}
DC_{max}, DW_{max} for causing forces, DC_{max}, DW_{max} for causing forces,	DC_{min}, DW_{min} for resisting forces DC_{min}, DW_{min} for resisting forces
EV_{min}	EV_{max}
EH_{max}	EH_{max}
LS	LS

Load Factors
Table 7.7.2-1

7.7.3 Geotechnical Report Summary

The Geotechnical Branch will evaluate overall bridge site stability. Slope stability normally applies to steep embankments at the abutment. If stability is in question, a maximum service limit state load will be specified in the report. Bridge design will determine the maximum total service load applied to the embankment. The total load must be less than the load specified in the Geotechnical Report.

Based on the foundations required in the Preliminary Plan and structural information available at this stage, the Report provides the following geotechnical engineering results. For all design limit states, the total factored footing load must be less than factored resistance.

A. Plan Detailing

The Bridge Plans shall include the nominal bearing capacity in the General Notes as shown in Figure 7.7.3-1. This information is included in the Plans for future reference by the Bridge and Structures Office.

THE NOMINAL BEARING CAPACITY OF THE SPREAD FOOTINGS SHALL BE TAKEN AS, IN KSF:

PIER NO.	SERVICE-I LIMIT STATE	STRENGTH AND EXTREME EVENT-I LIMIT STATES
1	====	====
2	====	====

Figure 7.7.3-1

B. Bearing Capacity - Service, Strength and Extreme Limit States

The unfactored bearing capacity (q_n) may be increased or reduced based on previous experience for the given soils. The Geotechnical Report will contain the following information:

- Unfactored bearing capacity (q_n) for anticipated effective footing widths, which is the same for the strength and extreme event limit states
- Resistance factor for strength limit state (ϕ_b).
- Resistance factor for the extreme event limit state (ϕ_b) is 1.0
- Service bearing capacity (q_{ser}) and amount of assumed settlement
- Embedment depth requirements or footing elevations to obtain the recommended q_n

C. Sliding Capacity - Strength and Extreme Limit States

The Geotechnical Report will contain the following information to determine earth loads and the factored sliding resistance (Q_R). $Q_R = \phi \quad Q_n = \phi$

- Resistance factor for strength limit state (ϕ_τ)
- Soil parameters ϕ_{soil}, K_a, and γ for calculating Q_τ and active force (EH) behind abutment footings
- If passive earth pressure (Q_{ep}) is allowed at a footing,
- Soil parameters of ϕ_{soil}, K_p, γ and depth of soil in front of footing
- Resistance factor ϕ_{ep} for strength

D. Foundation Springs - Extreme Limit State

When a structural evaluation of soil response is required for a bridge analysis, the Geotechnical Branch will determine foundation soil/rock shear modulus and Poissons ratio (G and μ). These values will typically be determined for shear strain levels of 2% to 0.2%, which are typical strain levels for large magnitude earthquakes.

7.7.4 Spread Footing Structural Design

The following BDM Section is oriented towards abutment spread footing design. Spread footing designs for intermediate piers or other applications use the same concepts with the appropriate structural analysis. Structural designers should complete all design checks before consulting with the geotechnical engineer about any design problem. There may be several problem criteria that should be addressed in the solution.

A. Abutment Spread Footing Force Diagram

Figures 7.7.4-1 and 7.7.4-2 diagram the forces that act on abutment footings. Each limit state design check will require calculation of a reaction (R) and the location (X_o) or eccentricity (e_o). The ultimate soil passive resistance (Q_{ep}) at the toe is determined by the geotechnical engineer and is project specific.

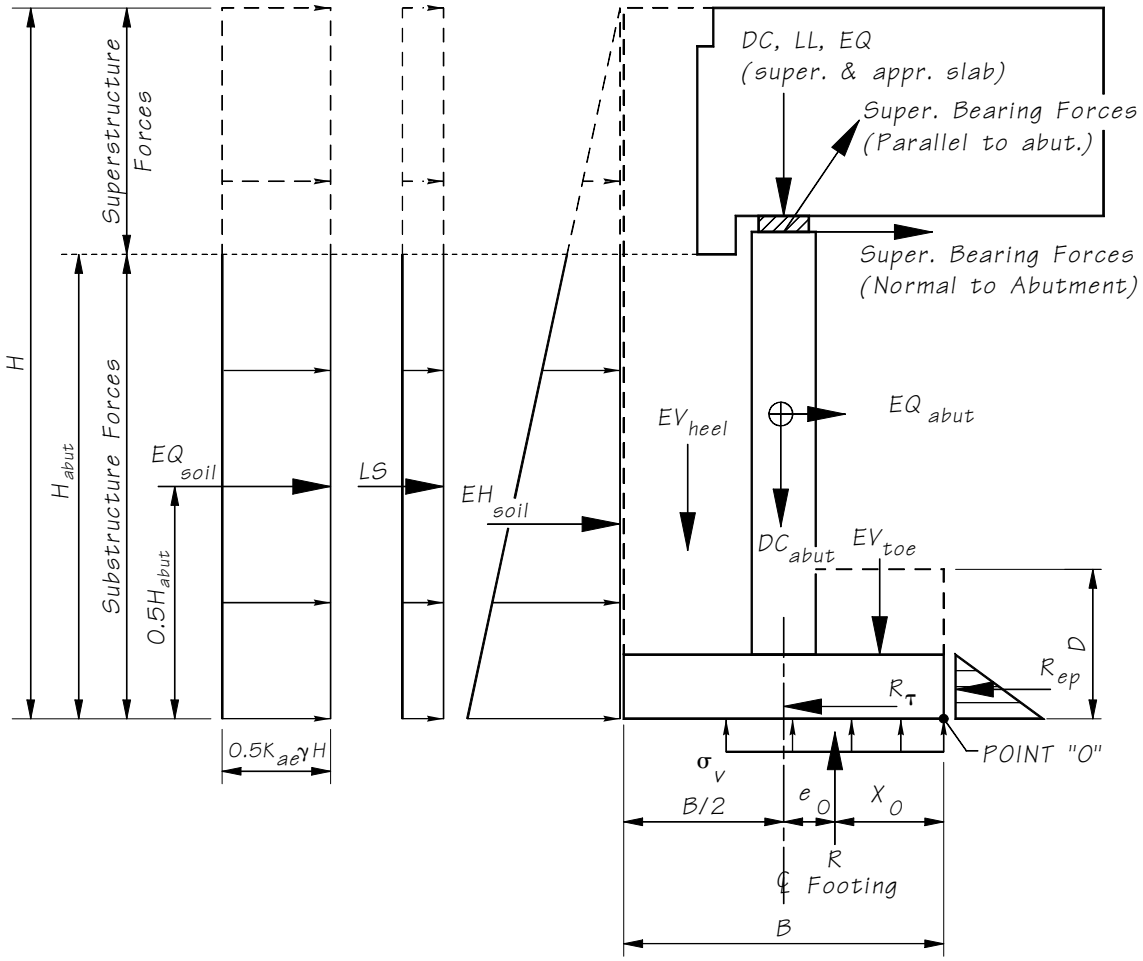

Cantilever (End Diaphragm) Abutment Force Diagram
Figure 7.7.4-1

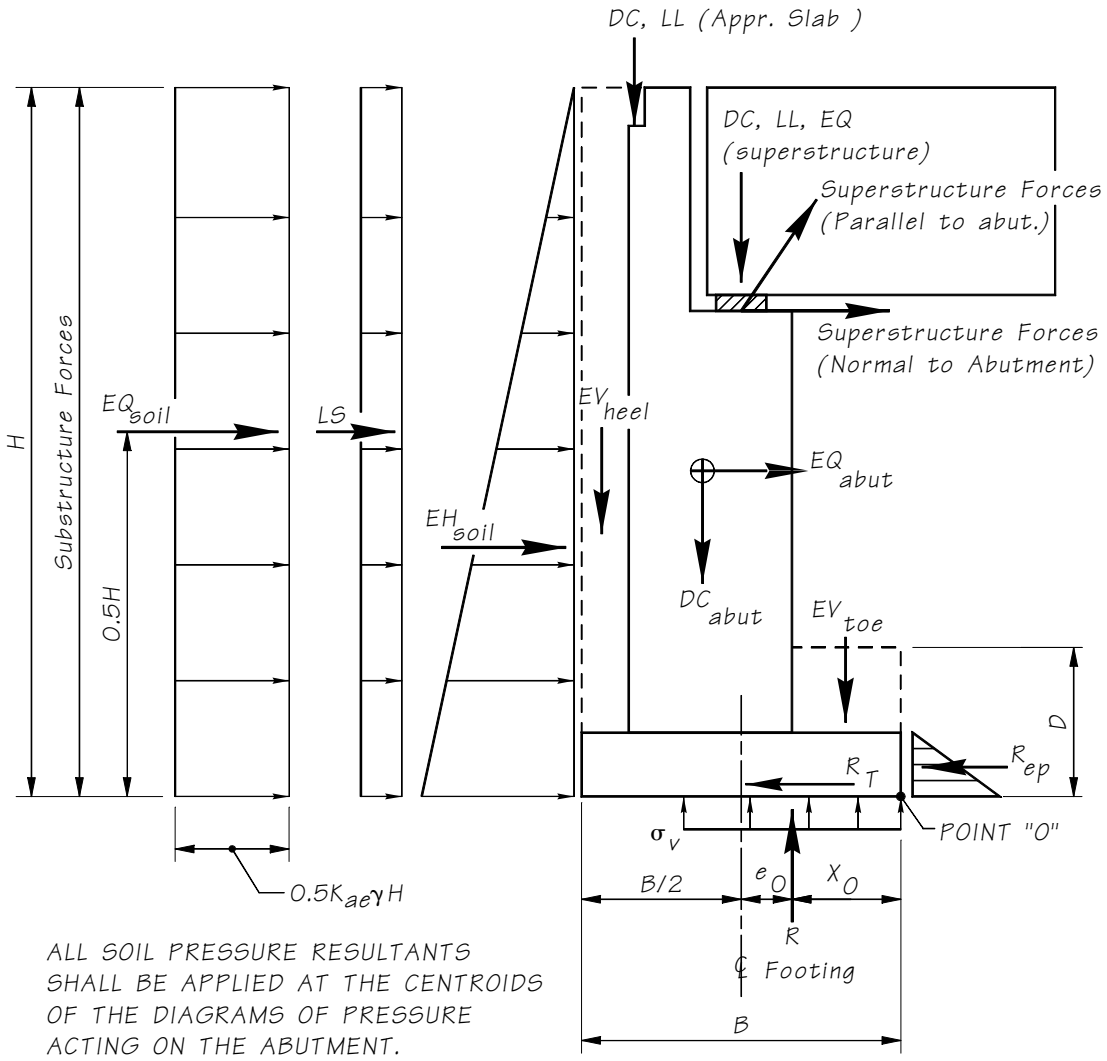

L-Abutment Force Diagram
Figure 7.7.4-2

B Bearing Stress

For geotechnical and structural footings design, the bearing stress calculation assumes a uniform bearing pressure distribution. For footing designs on rock, the bearing stress is based on a triangular or trapezoidal bearing pressure distribution. The procedure to calculate bearing stress is summarized in the following outline. See Abutment Spread Footing Force Diagrams for typical loads and eccentricity.

Step 1: Calculate the Resultant force (R_{str}), location (Xo_{str}) and eccentricity for Strength (e_{str}).

Xo_{str} = (factored moments about the footing base)/(factored vertical loads)

Step 2A: For Footings on Soil:

Calculate the maximum soil stress (σ_{str}) based on a uniform pressure distribution. Note that this calculation method applies in both directions for biaxially loaded footings. See AASHTO 10.6.3.1.5 for guidance on biaxial loading. The maximum footing pressure on soil with a uniform distribution is:

$\sigma_{str} = R/B' = R/2Xo = R/(B-2e)$, where B′ is the effective footing width.

Step 2B: For Footings on Rock:

If the reaction is outside the middle ⅓ of the base, use a triangular distribution.

σ_{str} max = 2R/3 Xo, where "R" is the factored limit state Reaction.

If the reaction is within the middle ⅓ of the base, use a trapezoidal distribution.

σ_{str} max = $R/B\ (1+ 6\ e/B^2\ )$

In addition, WSDOT limits the maximum stress (P/A) applied to rock due to vertical loads only. This is because the rock stiffness approaches infinity relative to the footing concrete. The maximum width of uniform stress is limited to C+2D as shown in Figure 7.7.4-3.

Step 3: Compare the factored bearing stress (σ_{str}) to the factored bearing capacity ($\phi b_c q_n$) of the soil or rock. The factored bearing stress must be less than or equal to the factored bearing capacity.

$\sigma_{str} \leq \phi b_c q_n$

Step 4: Repeat steps 1 thru 3 for the Extreme Event limit state. Calculate Xo_{ext}, e_{ext}, and σ_{ext} using Extreme factors and compare the factored stress to the factored bearing ($\phi_b q_n$).

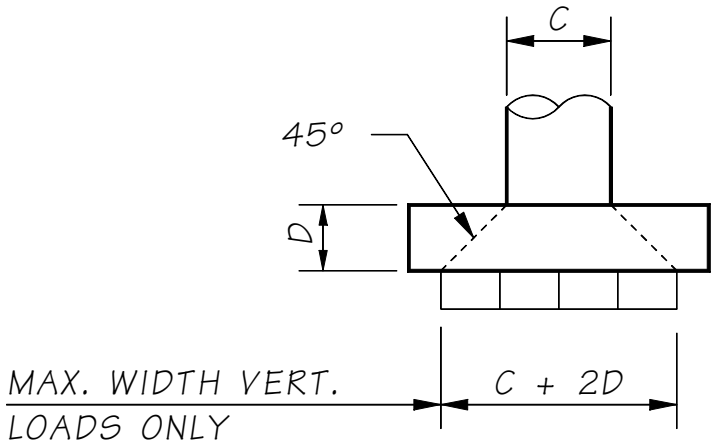

Footings on Rock

Figure 7.7.4-3

C. Failure By Sliding

The factored sliding resistance (Q_R) is comprised of a frictional component ($\varphi_\tau Q_\tau$) and the Geotechnical Branch may allow a passive earth pressure component ($\phi_{ep} Q_{ep}$). The designer shall calculate Q_R based on the soil properties specified in the Geotechnical Report. The frictional component acts along the base of the footing, and the passive component acts on the vertical face of a buried footing element. The factored sliding resistance should be greater than or equal to the factored horizontal applied loads.

$Q_R = \phi_\tau Q_\tau \pm \phi_{ep} Q_{ep}$

The Strength Limit State ϕ_τ and ϕ_{ep} are provided in the Geotechnical Report or AASHTO 10.5.5-1. The Extreme Event Limit State Q_τ and ϕ_{ep} are generally equal to 1.0.

Q_τ = (R) tan δ

δ = friction angle between the footing base and the soil

δ = tan ϕ for cast-in-place concrete against soil

δ = (0.8)tan ϕ for precast concrete

R = Minimum Strength and Extreme factors are used to calculate R

ϕ = angle of internal friction for soil

D. Overturning Stability

Calculate the locations of the overturning reaction (R) for strength and extreme limit states. Minimum load factors are applied to forces and moments resisting overturning. Maximum load factors are applied to forces and moments causing overturning. Note that for footings subjected to biaxial loading, the following eccentricity requirements apply in both directions.

See AASHTO LRFD Articles 11.6.3.3 (Strength Limit State) and 11.6.5 (Extreme Event Limit State) for the appropriate requirements for the location of the overturning reaction (R)..

E. Footing Settlement

The service limit state bearing capacity (q_{ser}) will be a settlement-limited value, typically 1 inch.

Bearing Stress = $\sigma_{ser} < \phi q_{ser}$ = Factored nominal bearing

Where, q_{ser} is the unfactored service limit state bearing capacity and ϕ is the service resistance factor. In general, the resistance factor (ϕ) shall be equal to 1.0.

For immediate settlement (not time dependent), both permanent dead load and live load should be considered for sizing footings for the service limit state. For long-term settlement (on clays), only the permanent dead loads should be considered.

If the structural analysis yields a bearing stress (σ_{ser}) greater than the bearing capacity, then the footing must be re-evaluated. The first step would be to increase the footing size to meet bearing capacity. If this leads to a solution, recheck layout criteria and inform the geotechnical engineer the footing size has increased. If the footing size cannot be increased, consult the geotechnical engineer for other solutions.

F. Concrete Design

Footing design shall be in accordance with AASHTO Section 5.13.3 for footings and the general concrete design of AASHTO Chapter 5. The following Figure 7.7.4-4 illustrates the modes of failure checked in the footing concrete design.

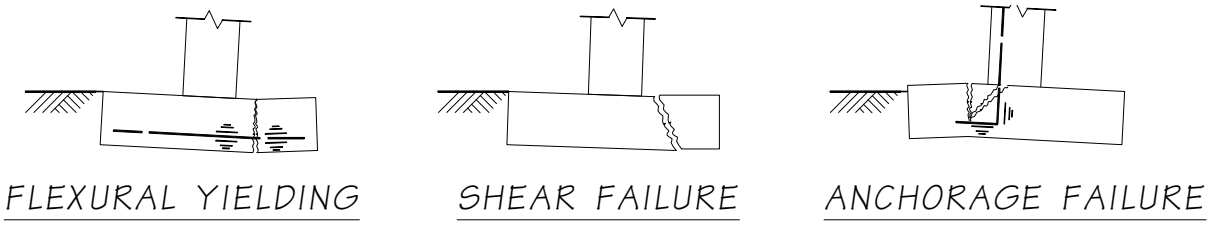

Figure 7.7.4-4

1. Footing Thickness and Shear

   The minimum footing thickness shall be 1 foot 6 inches. The minimum plan dimension shall be 4 feet 0 inches. Footing thickness may be governed by the development length of the column dowels, or by concrete shear requirements (with or without reinforcement). If concrete shear governs the thickness, it is the Engineer's judgment, based on economics, as to whether to use a thick footing unreinforced for shear or a thinner footing with shear reinforcement. Generally, shear reinforcement should be avoided but not at excessive cost in concrete, excavation, and shoring requirements. Where stirrups are required, place the first stirrup at d/2 from the face of the column or pedestal. For large footings, consider discontinuing the stirrups at the point where vu = vc.

2. Footing Force Distribution

   The maximum shear stress in the footing concrete shall be determined based on a triangular or trapezoidal bearing pressure distribution, see AASHTO 5.13.3.6. This is the same pressure distribution as for footing on rock, see BDM Section 7.7.4B.

3. Vertical Reinforcement (Column or Wall)

   Vertical reinforcement shall be developed into the footing to adequately transfer loads to the footing. Vertical rebar shall be bent 90° and extend to the top of the bottom mat of footing reinforcement. This facilitates placement and minimizes footing thickness. Bars in tension shall be developed using 1.25 Ld. Bars in compression shall develop a length of 1.25 Ld, prior to the bend. Where bars are not fully stressed, lengths may be reduced in proportion, but shall not be less than ¾ Ld.

   The concrete strength used to compute development length of the bar in the footing shall be the strength of the concrete in the footing. The concrete strength to be used to compute the section strength at the interface between footing and a column concrete shall be that of the column concrete. This is allowed because of the confinement effect of the wider footing.

4. Bottom Reinforcement

   Concrete design shall be in accordance with AASHTO. Reinforcement shall not be less than #6 bars at 12 inch centers to account for uneven soil conditions and shrinkage stresses.

5. Top Reinforcement

   Top reinforcement shall be used in any case where tension forces in the top of the footing are developed. Where columns and bearing walls are connected to the superstructure, sufficient reinforcement shall be provided in the tops of footings to carry the weight of the footing and overburden assuming zero pressure under the footing. This is the uplift earthquake condition described under "Superstructure Loads." This assumes that the strength of the connection to the superstructure will carry such load. Where the connection to the superstructure will not support the weight of the substructure and overburden, the strength of the connection may be used as the limiting value for determining top reinforcement. For these conditions, the AASHTO requirement for minimum percentage of reinforcement will be waived. Regardless of whether or not the columns and bearing walls are connected to the superstructure, a mat of reinforcement shall normally be provided at the tops of footings. On short stub abutment walls (4 feet from girder seat to top of footing), these bars may be omitted. In this case, any tension at the top of the footing, due to the weight of the small overburden, must be taken by the concrete in tension.

   Top reinforcement for column or bearing wall footings designed for two-way action shall not be less than #6 bars at 12 inch centers, in each direction while top reinforcement for bearing wall footings designed for one-way action shall not be less than #5 bars at 12 inch centers in each direction.

7.7.5 Footing Concrete Design on Pile Supports

The minimum footing thickness shall be 2 feet 0 inches. The minimum plan dimension shall be 4 feet 0 inches. Footing thickness may be governed by the development length of the column dowels, or by concrete shear requirements. The use of strut and tie modeling is recommended for the design of all pile caps and pile footings. Figure 7.7.5-1 identifies the modes of failure that should be investigated for general pile cap/footing design.

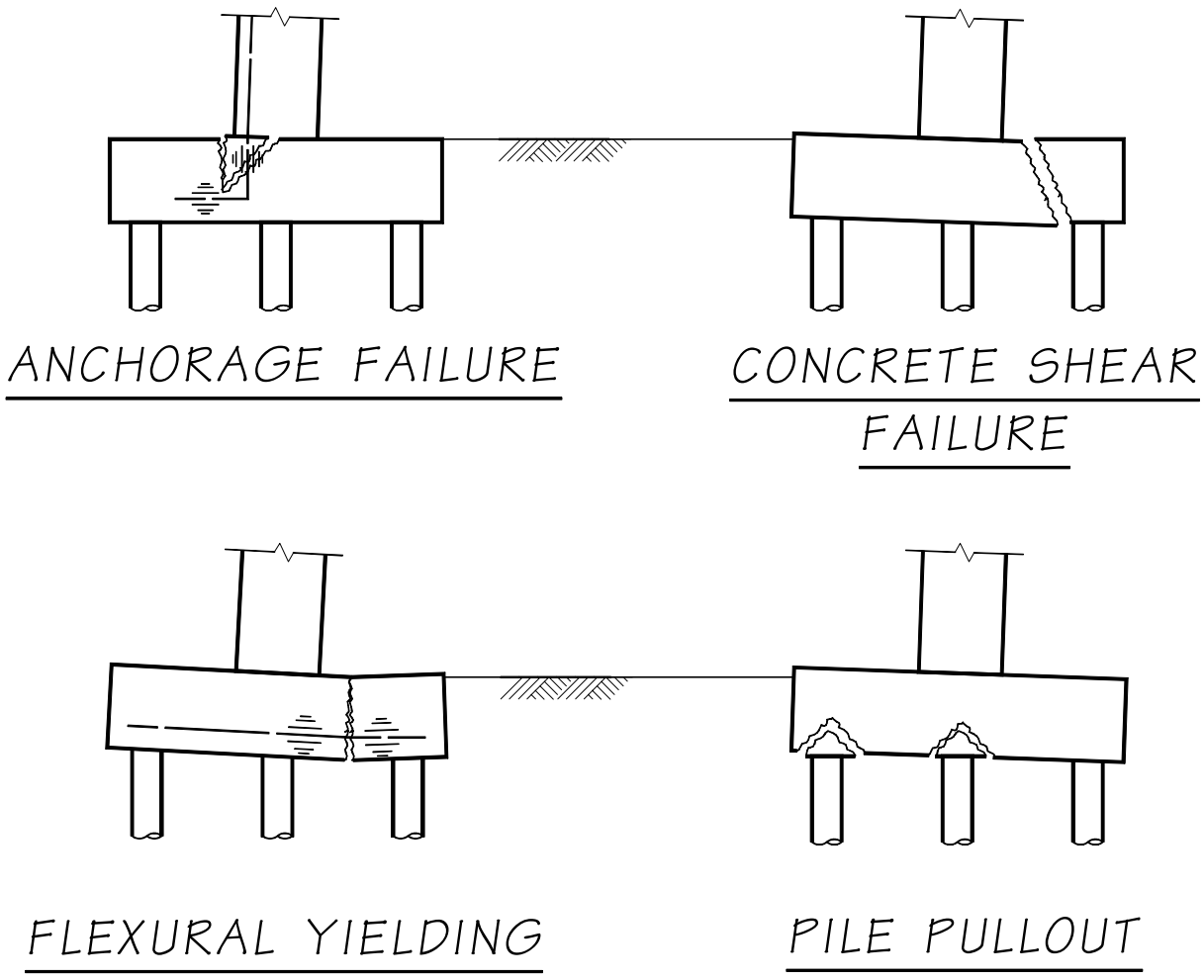

Pile Footing Modes of Failure
Figure 7.7.5-1

A. Pile Embedment, Clearance, and Rebar Mat Location

All piles shall have an embedment in the concrete sufficient to resist moment, shear, and axial loads. Cast-in-place concrete piles with reinforcing extending into footings are embedded a minimum of 6 inches. The clearance for the bottom mat of footing reinforcement shall be 1½" between the reinforcing and the top of the pile for C.I.P. pile footings. See Figure 7.7.5-2 for the minimum pile clearance to the edge of footing.

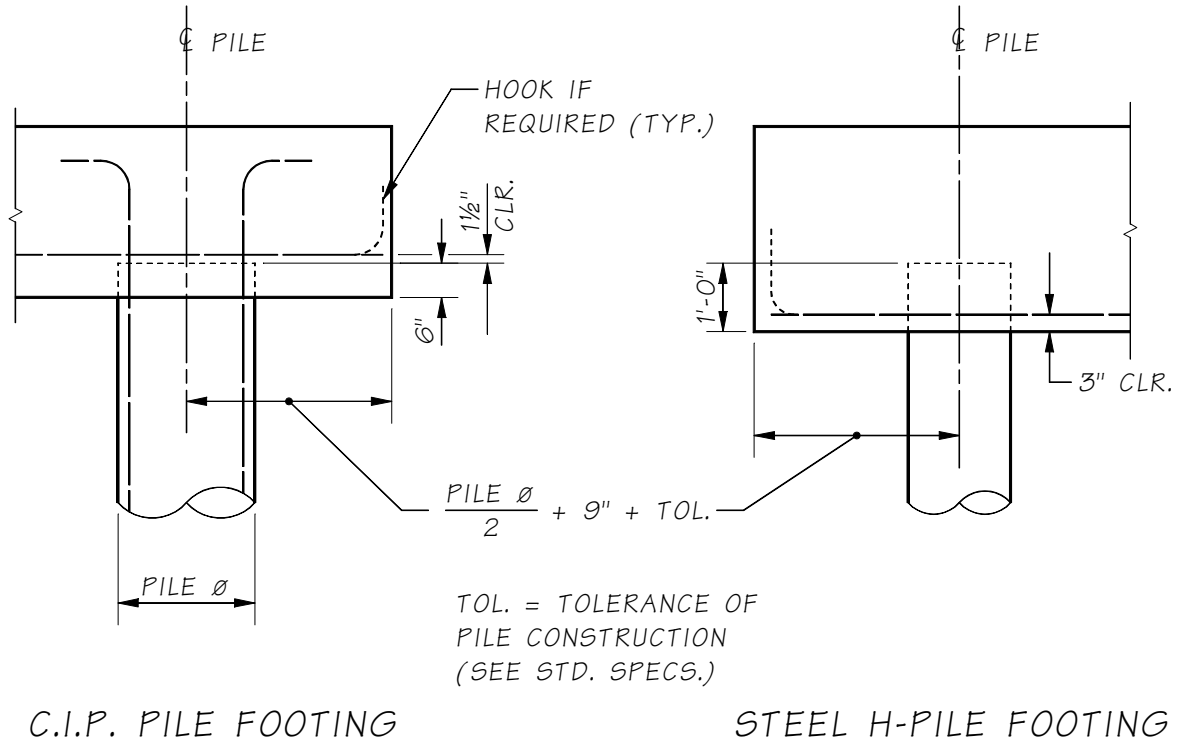

Pile Embedment and Reinforcing Placement
Figure 7.7.5-2

B. Concrete Design

In determining the proportion of pile load to be used for calculation of shear stress on the footing, any pile with its center 6 inches or more outside the critical section shall be taken as fully acting on that section. Any pile with its center 6 inches or more inside the critical section shall be taken as not acting for that section. For locations in between, the pile load acting shall be proportioned between these two extremes. The critical section shall be taken as the effective shear depth (d_v) as defined in AASHTO LRFD 5.8.2.9. The distance from the column/wall face to the allowable construction centerline of pile (design location plus or minus the tolerance) shall be used to determine the design moment of the footing. The strut and tie design method should be used where appropriate.

7.8 Drilled Shafts

7.8.1 Axial Resistance

The factored axial resistance of the drilled shaft (R) is generally composed of two parts: the nominal end bearing (R_p) and the nominal skin friction (R_s). The general formula is as follows, where φ is the limit state resistance factor.

$$R = \varphi_p R_p + \varphi_s R_s$$

The total factored shaft loading must be less than the factored axial resistance. R_p and R_s are treated as independent quantities although research has shown that the end bearing and skin friction resistance have some interdependence. R_p and R_s will be stated in the Geotechnical Report for the bridge.

The Bridge Plans shall include the end bearing and skin friction capacity for the service, strength, and extreme event limit states in the General Notes, as shown in

THE NOMINAL SHAFT CAPACITY SHALL BETAKENAS, IN KIPS:

SERVICE-I LIMIT STATE		
PIER NO.	SKIN FRICTION CAPACITY	END BEARING CAPACITY
1	====	====
2	====	====

STRENGTH LIMIT STATE		
PIER NO.	SKIN FRICTION CAPACITY	END BEARING CAPACITY
1	====	====
2	====	====

EXTREME EVENT-I LIMIT STATE		
PIER NO.	SKIN FRICTION CAPACITY	END BEARING CAPACITY
1	====	====
2	====	====

Figure 7.8.1-1

7.8.2 Structural Design and Detailing

The current ADSC/WSDOT Shaft Special Provision should be reviewed as part of the design of drilled shafts. The structural design of drilled shafts is similar to column design. The following guidelines shall be followed:

A. Drilled shafts shall be designed for the lesser of the plastic forces or elastic seismic forces of the column above in single column/single shaft foundations. This applies to all seismic zones in Washington State.

B. Concrete Class 4000P shall be specified for the entire length of the shaft, wet or dry conditions of placement.

C. When shafts are constructed in water, the concrete specified for the casing shoring seal shall be Class 4000W.

D. The assumed concrete compressive strength shall be 0.85f'c for structural design of shafts. Most shafts in the State are constructed with the wet method using slurries to stabilize caving soils. A reduction in concrete strength is used to account for the unknown shaft concrete quality that results.

E. The presence of permanent steel casing shall be taken into account in the shaft design (i.e. for stiffness, and etc.), but the structural capacity of permanent steel casing shall not be considered for structural design of drilled shafts.

F. Cover requirements vary, depending on the drilled shaft diameter. See subsection 3.05.C of the current ADSC/WSDOT Shaft Special Provision for the most current cover requirements.

G. In general, drilled shaft reinforcing shall be detailed to minimize congestion, facilitate concrete placement by tremie, and maximize consolidation of concrete.

H. The clear spacing between spirals and hoops shall not be less than 6" or more than 9", with the following exception. The clear spacing between spirals or hoops may be reduced in the splice zone in single column/single shaft connections because shaft concrete may be vibrated in this area, negating the need for larger openings to facilitate good flow of concrete through the reinforcing cage.

I. The volumetric ratio and spacing requirements of the AASHTO Guide Specifications for LRFD Seismic Bridge Design for confinement need not be met. The top of shafts in typical WSDOT single column/single shaft connections remains elastic under seismic loads due to the larger shaft diameter (as compared to the column). Therefore this requirement does not need to be met.

J. Shaft transverse reinforcement may be constructed as hoops or spirals. Spiral reinforcement is preferred for shaft transverse reinforcement. However, if #6 spirals at 6" (excluding the exception in 7.8.2H) clear do not satisfy the shear design, hoops may be used. Full welded splices as shown in Figure 7.8.2-1 shall be used.

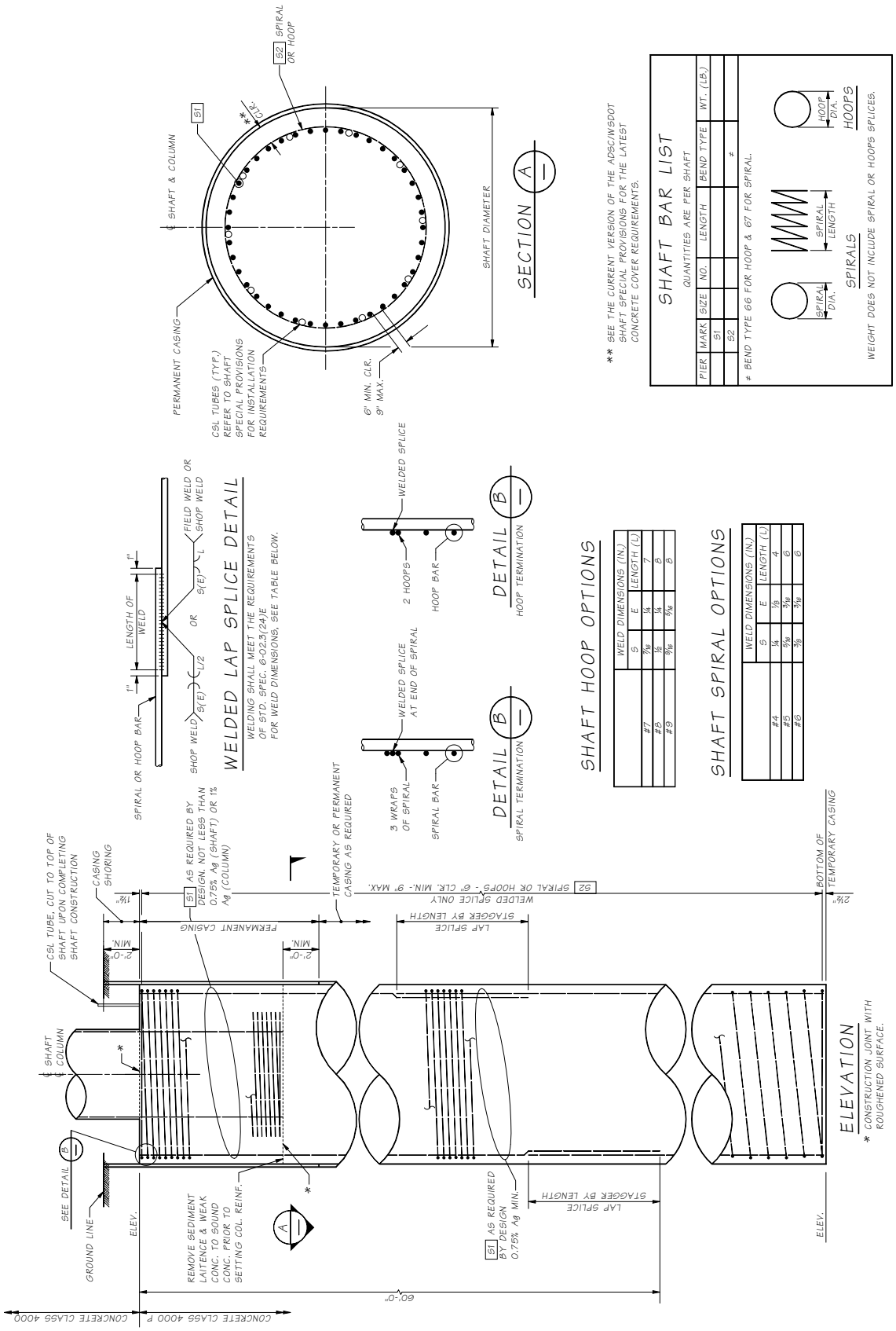

Typical Drilled Shaft Details
Figure 7.8.2-1

K. In single column/single shaft configurations, the spacing of the shaft transverse reinforcement in the splice zone shall meet the requirements of the following equation, which comes from the TRAC Report titled, "NONCONTACT LAP SPLICES IN BRIDGE COLUMN-SHAFT CONNECTIONS":

$$s_{tr} = \frac{2\pi A_{sp} f_{ytr} l_s}{A_l f_{ul}}$$

Where:

S_{tr} = spacing of transverse shaft reinforcement
A_{sp} = Area of shaft spiral or transverse reinforcement
f_{ytr} = yield strength of shaft transverse reinforcement
l_s = standard splice length of the column reinforcement
A_l = Area of longitudinal shaft reinforcement
f_{ul} = ultimate strength of shaft longitudinal reinforcement

L. Longitudinal reinforcement shall be provided for the full length of drilled shafts. The minimum longitudinal reinforcement in the splice zone of single column/single shaft connections shall be the larger of 0.75% A_g of the shaft or 1.0% A_g of the attached column. The minimum longitudinal reinforcement beyond the splice zone shall be 0.75% A_g of the shaft. The minimum longitudinal reinforcement in shafts without single column/single shaft connections shall be 0.75% A_g of the shaft.

M. The clear spacing between longitudinal reinforcement shall not be less than 6" or more than 9". If a shaft design is unable to meet this minimum requirement, a larger diameter shaft shall be considered.

N. Longitudinal reinforcing in drilled shafts should be straight with no hooks to facilitate concrete placement and removal of casing. If hooks are necessary to develop moment at the top of a drilled shaft (in a shaft cap situation) the hooks should be turned toward the center of the shaft while leaving enough opening to allow concrete placement with a tremie.

O. Use of two concentric circular rebar cages shall be avoided.

P. Resistance factors for Strength Limit States shall be per the latest AASHTO LRFD Bridge Design Specifications. Resistance factors for Extreme Event Limit States shall be per the latest AASHTO Guide Specifications for LRFD Seismic Design.

Q. The axial load along the shaft varies due to the side friction. It is considered conservative, however, to design the shaft for the full axial load plus the maximum moment. The entire shaft normally is then reinforced for this axial load and moment.

R. The resistance factor for shear shall conform to the AASHTO LRFD Bridge Design Specifications.

S. Access tubes for Crosshole Sonic Log (CSL) testing shall be provided in all shafts. One tube shall be furnished and installed for each foot of shaft diameter, rounded to the nearest whole number, and shown in the plans. The number of access tubes for shaft diameters specified as "X feet 6 inches" shall be rounded up to the next higher whole number. The access tubes shall be placed around the shaft, inside the spiral or hoop reinforcement and three inches clear of the vertical reinforcement, at a uniform spacing measured along the circle passing through the centers of the access tubes. If the vertical reinforcement is not bundled and each bar is not more than one inch in diameter, the access tubes shall be placed two inches clear of the vertical reinforcement. If these minimums cannot be met due to close spacing of the vertical reinforcement, then access tubes shall be bundled with the vertical reinforcement.

T. Shafts shall be specified in English dimensions and shall be specified in sizes that do not preclude any drilling method. Shafts shall be specified in whole foot increments except as allowed here. The tolerances in the current ADSC/WSDOT Shaft Special Provision accommodate Metric casing sizes for shafts specified as 2', 3', 4', 7', 8', and 9' diameter. See Table 7.8.2-1.

Nominal (Outside) English Casing Diameter (feet)	Nominal English Casing Diameter (inches)	* Maximum Increase in Casing Inside Diameter (inches)	Maximum English Casing Diameter (inches)	Nominal (Outside) Metric Casing Diameter (meters)	Nominal Metric Casing Diameter (feet)	Nominal Metric Casing Diameter (inches)
10.0	120	6	126			
9.5	114	6	120	3.00	9.84	118.11
9.0	108	6	114	2.80	9.19	110.23
8.0	96	6	102	2.50	8.20	98.42
7.0	84	6	90	2.20	7.22	86.61
6.5	78	6	84	2.00	6.56	78.74
6.0	72	6	78			
5.5	66	6	72			
5.0	60	12	72			
4.5	54	12	66	1.50	4.92	59.05
4.0	48	12	60	1.50	4.92	59.05
3.0	36	12	48	1.00	3.28	39.37
3.0	36	12	48	0.915	3.00	36.02
2.0	24	12	36	0.70	2.30	27.56

* Check the current ADSC/WSDOT Shaft Special Provision

Table 7.8.2-1

As seen in Table 7.8.2-1. Metric casings are not readily available to accommodate shafts specified as 5'-0", 6'-0", and 10'-0" diameter. For such cases, the preferred approach is to design and specify the shafts as 4'-6", 6'-6", and 9'-6" diameter shafts. The construction tolerances in the current Shaft Special Provision would then also allow contractors to either up-size to 5'-0", 7'-0", and 10'-0" diameter shafts, respectively, or to furnish the appropriate metric casing. Alternatively, two shaft designs may be shown in the plans if 5'-0", 6'-0", or 10'-0" diameter shafts are desired. One of the designs shall accommodate a Metric casing, but shall be specified in English to the nearest half-foot diameter. Metric casing sizes are typically available in the sizes shown in Table 7.8.2-1.

U. Shafts supporting a single column shall be sized to allow for construction tolerances, as illustrated in Figure 7.8.2-2.

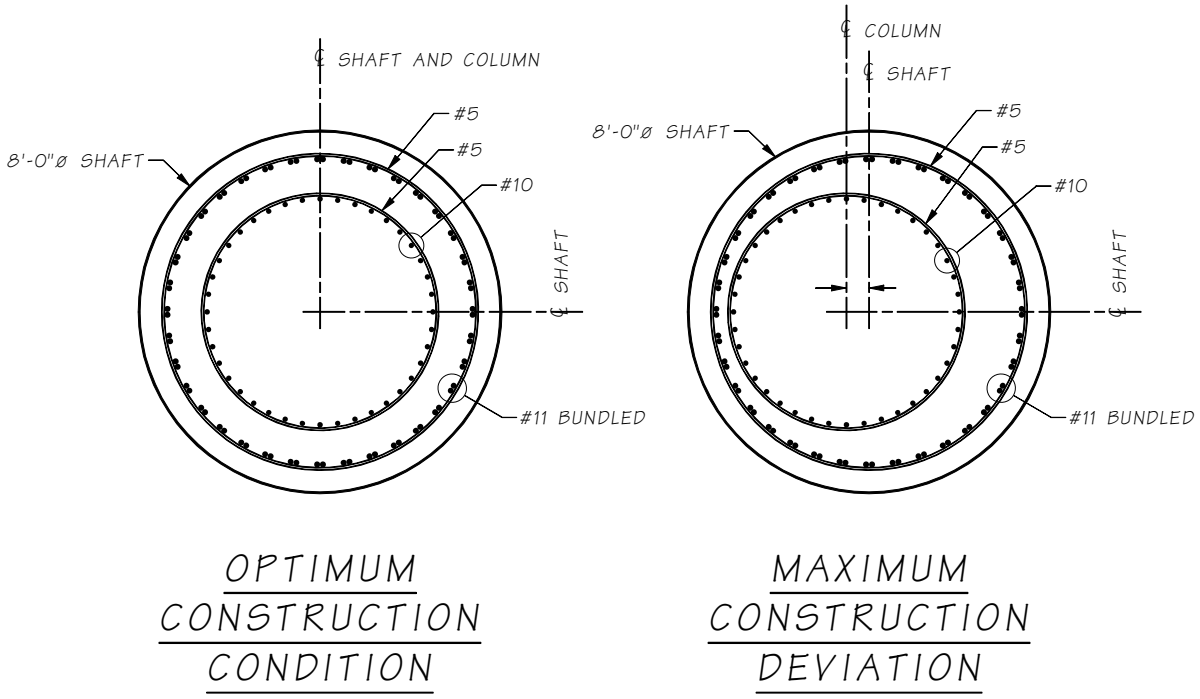

Figure 7.8.2-2

The shaft diameter shall be based on the maximum column diameter allowed by the following equation,

Maximum Column Diameter = Shaft Diameter– 2*(Shaft Concrete Cover) – 2*(Shaft Horizontal Construction Tolerance) – 2*(Shaft Cage Thickness)

The shaft horizontal construction tolerance and shaft concrete cover shall be per the current ADSC/WSDOT Shaft Special Provision.

If the column diameter used in design is larger than the maximum allowed for a given shaft size, as defined by the equation above, a larger shaft diameter shall be used.

The shaft diameter specified here should not be confused with the desirable casing shoring diameter discussed below.

V. Casing shoring shall be provided for all shafts below grade or waterline. However, casing shoring requirements are different for shafts in shallow excavations and deep excavations. Shafts in deep excavations require a larger diameter casing shoring to allow access to the top of the shaft for column form placement and removal. The top of shafts in shallow excavations (approximately 4 feet or less) can be accessed from the ground line above, by reaching in or by “glory-holing”, and therefore do not require larger diameter casing shoring. See Figure 7.8.2-3.

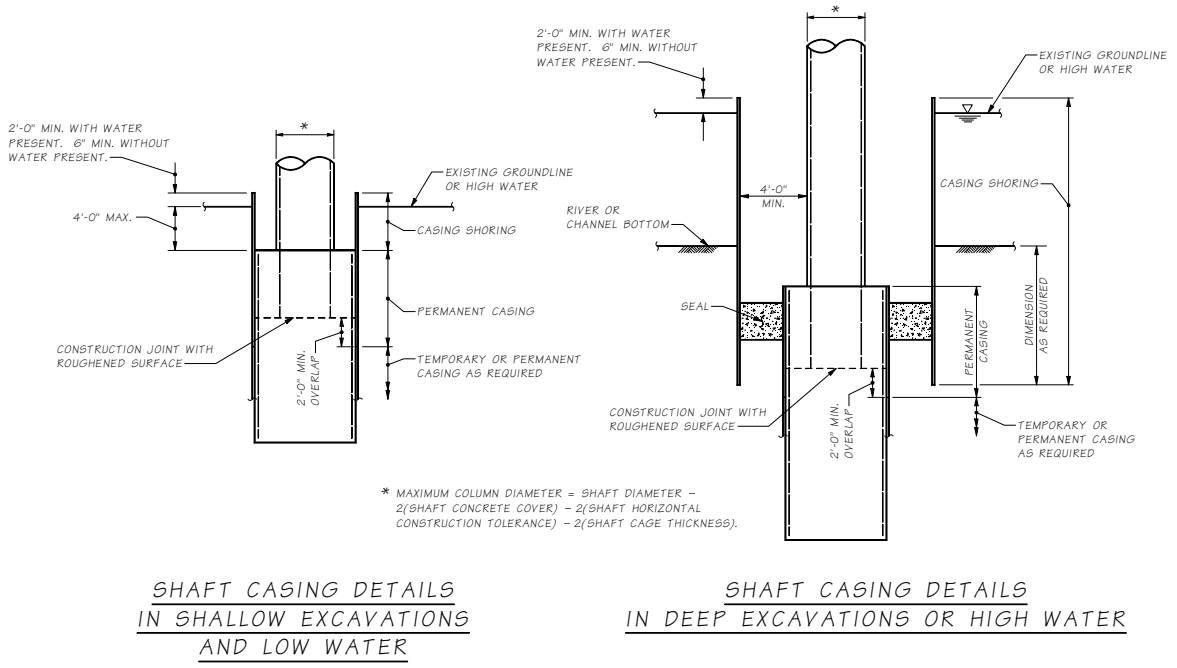

Figure 7.8.2-3

W. Changes in shaft diameters due to construction tolerances allowed in the ADSC/WSDOT Shaft Special Provision shall not result in a reinforcing steel cage diameter different from the diameter shown in the plans (plan shaft diameter minus concrete cover). For example, Metric casing diameters used in lieu of English casing diameters shall only result in an increase in concrete cover, except as noted below for single column/single shaft connections requiring slip casings.

X. Rotator and Oscillator drilling methods typically use a slip casing for permanent casing in single column/single shaft connections, as shown in Figure 7.8.2-4.

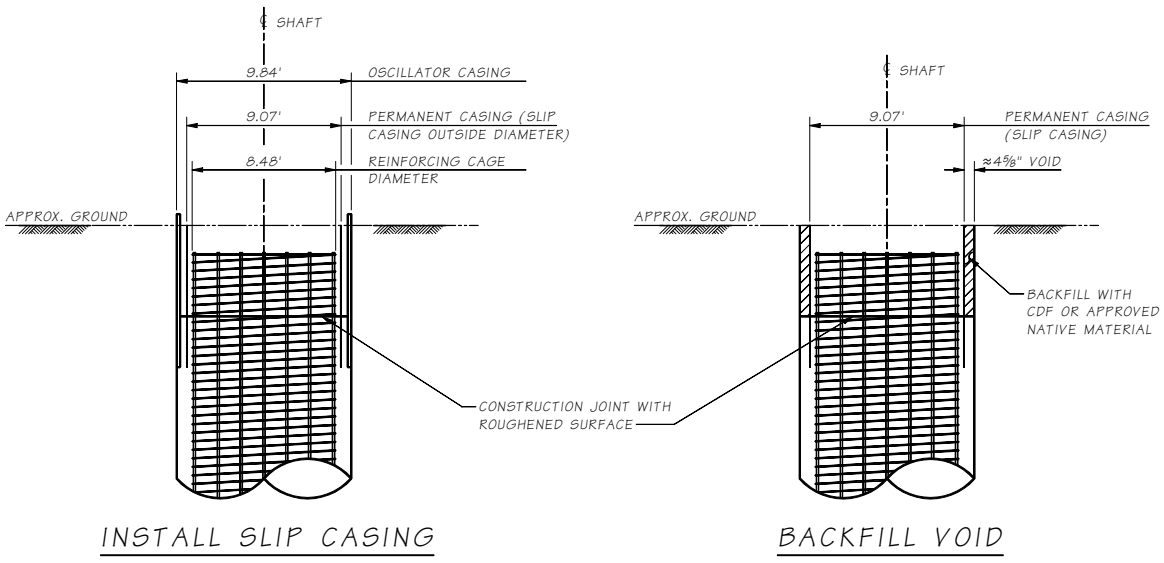

Figure 7.8.2-4

The use of the slip casing typically requires a modification to the reinforcing cage diameter. This should be considered during the structural design of the shaft. The slip casing also results in less concrete cover than the area of the shaft below the slip casing. See Table 7.8.2-2 for expected reinforcing cage diameters and clear cover. Shafts shall be designed such that the reduced concrete cover is acceptable in this area because the casing is permanent. A minimum of 2.50" of concrete cover is achievable in this area and shall be kept as a minimum requirement. The reduction in strength (compared to the area below the slip casing) associated with the reduced shaft diameter that results from the slip casing is bounded within the shaft analysis and design methods prescribed here and elsewhere. Therefore the reduction in strength in this area can be ignored.

Nominal (Outside) Metric Casing Diameter (meters)	Nominal (Outside) Metric Casing Diameter (feet)	[1]Nominal (Outside) Metric Cage Diameter (inches)	Nominal (Outside) Metric Cage Diameter (feet)	[2]Inside Diameter of Metric Casing (inches)	[3]Nominal (Outside) Metric Slip Casing Diameter (inches)	Nominal (Outside) Metric Slip Casing Diameter (feet)	Nominal (Outside) Metric Slip Casing Diameter (meters)	Cage Clearance Below Slip Casing (inches)	[4]Cage Clearance at Slip Casing (inches)
3.00	9.84	101.81	8.48	111.81	108.81	9.07	2.76	8.15	2.50
2.80	9.19	95.51	7.96	105.51	102.51	8.54	2.60	7.36	2.50
2.50	8.20	83.70	6.98	93.70	90.70	7.56	2.30	7.36	2.50
2.20	7.22	71.89	5.99	81.89	78.89	6.57	2.00	7.36	2.50
2.00	6.56	64.02	5.34	74.02	71.02	5.92	1.80	7.36	2.50
1.50	4.92	45.12	3.76	55.12	52.12	4.34	1.32	6.97	2.50
1.50	4.92	45.12	3.76	55.12	52.12	4.34	1.32	6.97	2.50
1.00	3.28	26.22	2.19	36.22	34.22	2.85	0.87	6.57	3.00
0.92	3.00	22.87	1.91	32.87	30.87	2.57	0.78	6.58	3.00

Notes:

1 Provided by Malcolm Drilling. Assumes minimum of 5 inches clearance to inside of oscillator casing on 5 foot and larger and uses 3 inches of clearance on 4 foot and smaller.

2 Provided by Malcolm Drilling.

3 Provided by Malcolm Drilling. Slip Casing is 3” smaller than ID of temporary casing from 1.2M to 3M. 1M on down is 2” smaller in diameter.

4 Slip casing is typically ⅜” to ½” thick (Provided by Malcolm Drilling). Cage clearance assumes ½” thick casing.

Table 7.8.2-2

Y. Reinforcing bar centralizers shall be detailed in the plans as shown in Figure 7.8.2-5. The centralizers shall be detailed as ½" less than the concrete cover required in the current ADSC/ WSDOT Shaft Special Provision.

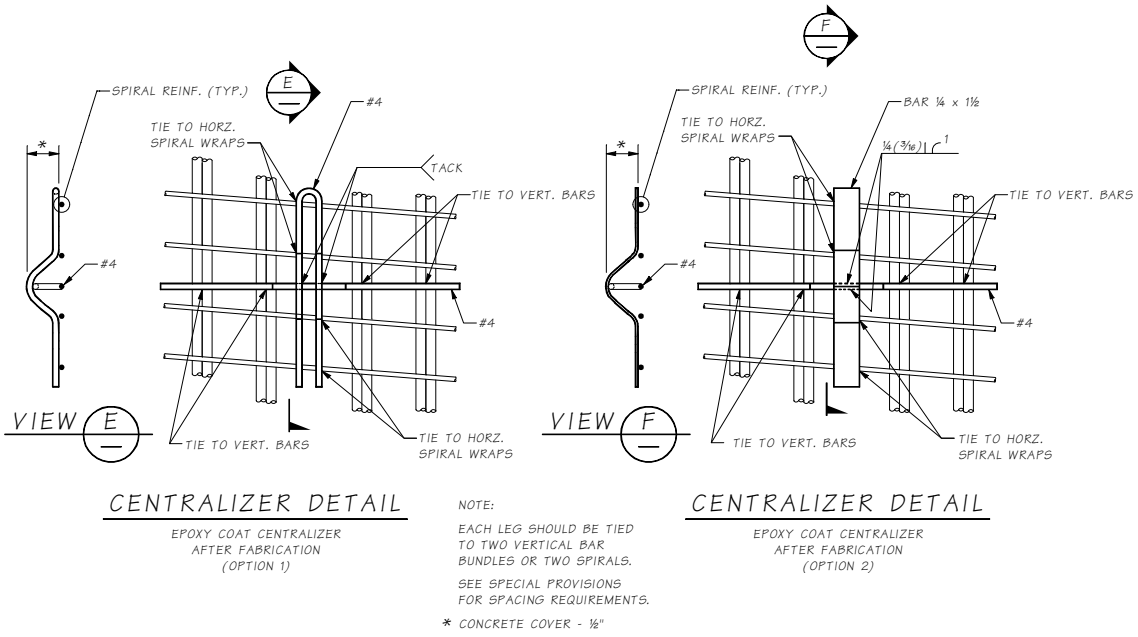

Figure 7.8.2-5

7.9 Piles and Piling

7.9.1 Pile Types

This section of the BDM describes the piling used by the Bridge and Structures Office and their applications. In general, piles should not be used where spread footings can be used. However, where heavy scour conditions may occur, pile foundations should be considered in lieu of spread footings. Also, where large amounts of excavation may be necessary to place a spread footing, pile support may be more economical.

A. Cast-in-Place Concrete Piles

Cast-in-Place (CIP) concrete piles utilize driven steel pipe casings, which are then filled with reinforcing steel and concrete. The bottom of the casing is typically capped with a suitable flat plate for driving. However, the Geotechnical Branch may specify special tips when difficult driving is expected.

The Geotechnical Branch will determine the minimum wall thickness of the steel pipe casings based on driving conditions. However, the Standard Specifications require the contractor to provide a wall thickness that will prevent damage during driving.

B. Precast, Prestressed Concrete Piles

Precast, prestressed concrete piles are octagonal, or square in cross-section and are prestressed to allow longer handling lengths and resist driving stresses. Standard Plans are available for these types of piles.

C. Steel H Piles

Steel piles have been used where there are hard layers that must be penetrated in order to reach an adequate point bearing stratum. Steel stress is generally limited to 9.0 ksi (working stress) on the tip. H piling can act efficiently as friction piling due to its large surface area. Do not use steel H piling where the soil consists of only moderately dense material. In such conditions, it may be difficult to develop the friction capacity of the H piles and excessive pile length may result.

D. Timber Piles

Timber piles may be untreated or treated. Untreated piles are used only for temporary applications or where the entire pile will be permanently below the water line. Where composite piles are used, the splice must be located below the permanent water table. If doubt exists as to the location of the permanent water table, treated timber piles shall be used.

Where dense material exists, consideration should be given to allowing jetting (with loss of uplift capacity), use of shoes, or use of other pile types.

E. Steel Sheet Piles

Steel sheet piles are typically used for cofferdams and shoring and cribbing, but are usually not made a part of permanent construction.

Cast-in-place (CIP) concrete piles consisting of steel casing filled with reinforcing steel and concrete are the preferred type of piling for WSDOT's permanent bridges. Other pile types such as precast, prestressed concrete piles, steel H piles, timber piles, auger cast piles, and steel pipe piles shall not be used for WSDOT permanent bridge structures. These types of piles may be used for temporary bridges and other non-bridge applications subject to approval by the State Geotechnical Engineer and the State Bridge Design Engineer.

Micropiles shall not be used for new bridge foundations. This type of pile may be used for foundation strengthening of existing bridges, temporary bridges and other non-bridge applications subject to approval by the State Geotechnical Engineer and the State Bridge Design Engineer.

Battered piles shall not be used for bridge foundations to resist lateral loads.

The above limitations apply to all WSDOT bridges including mega projects and design-build contracts.

The above policy on pile types is the outcome of lengthy discussions and meetings between the bridge design, construction and geotechnical engineers. These limitations are to ensure improved durability, design and construction for WSDOT pile foundations.

In seismic applications there is a need for bi-directional demands. Steel H piles have proven to have little bending capacity for the purposes of resisting seismic load while circular CIP piles provide consistent capacities in all directions. Also, CIP pile casing is generally available in a full range of casing diameters. CIP piles are easily inspected after driving to ensure the quality of the finished pile prior to placing reinforcing steel and concrete. All bending strength is supplied by elements other than the casing in accordance with BDM policy.

Precast, prestressed concrete piles, and timber piles are difficult to splice and for establishing moment connections into the pile cap.

Micropiles have little bending capacity for the purposes of resisting lateral loads in seismic applications.

7.9.2 Single Pile Axial Resistance

The Geotechnical Report will provide the nominal axial resistance (R_n) and resistance factor (ϕ) for pile design. The factored pile load ($P_{u\ pile}$) must be less than the factored resistance, ϕR_n, specified in the Geotechnical Report.

Pile axial loading ($P_{u\ pile}$) due to loads applied to a pile cap are determined as follows:

$$(P_{U\ pile}) = (P_{U\ pile\ group})/N + M_{U\ group}\ C/I_{\ group} + \gamma DD$$

where,

$M_{U\ group}$ = Factored moment applied to the pile group. This includes eccentric LL, DC, centrifugal force (CE), etc. Generally, the dynamic load allowance (IM) does not apply.

C = Distance from the centroid of the pile group to the center of the pile under consideration.

$I_{\ group}$ = Moment of inertia of the pile group

N = Number of piles in the pile group

$P_{U\ pile\ group}$ = Factored axial load to the pile group

DD = Downdrag force specified in the Geotechnical Report

γ = Load factor specified in the Geotechnical Report

Pile selfweight is typically neglected. As shown above, downdrag forces are treated as load to the pile when designing for axial capacity. However, it should not be included in the structural analysis of the bridge.

7.9.3 Block Failure

For the strength and extreme event limit states, if the soil is characterized as cohesive, the pile group capacity should also be checked for the potential for a "block" failure, as described in AASHTO LRFD Article 10.7.3.9. This check, Step 9 in Figure 7.9.2-1, requires interaction between the designer and the geotechnical engineer. The check is performed by the geotechnical engineer based on loads provided by the designer. If a block failure appears likely, the pile group size should be increased so that a block failure is prevented.

7.9.4 Pile Uplift

Piles may be designed for uplift if specified in the Geotechnical Report. In general, pile construction methods that require preboring, jetting, or spudding must will reduce uplift capacity.

7.9.5 Pile Spacing

Pile spacing determination is typically determined collaboratively with the geotechnical engineer. The Geotechnical Design Manual (GDM) specifies a minimum center-to-center spacing of 30 inches or 2.5 pile diameters. However, center-to-center spacings of less than 2.5 pile diameters may be considered on a case-by-case basis.

7.9.6 Structural Design and Detailing of CIP Concrete Piles

The structural design and detailing of CIP Concrete piles is similar to column design with the following guidelines:

A. Class 4000P Concrete shall be specified for CIP concrete piles. The top 10 feet of concrete in the pile is to be vibrated. Use 1.0 f'c for the structural design.

B. For structural design, the reinforcement alone shall be designed to resist the total moment throughout the length of pile without considering strength of the steel casing. The minimum reinforcement shall be 0.5% Ag for Seismic Zones 1 & 2, and 0.75% A_g for Seismic Zones 3 & 4 as described in AASHTO LRFD Article 5.13.4.6. Minimum clearance between longitudinal bars shall meet the requirements in BDM Ch. 5, Figure 5-A-2.

C. If the pile to footing/cap connection is not a plastic hinge zone longitudinal reinforcement need only extend above the pile into the footing/cap a distance equal to 1.0 l_d (tension). If the pile to footing/cap connection is a plastic hinge zone longitudinal reinforcement shall extend above the pile into the footing/cap a distance equal to 1.25 l_d.

D. Since the diameter of the concrete portion of the pile is dependent on the steel casing thickness, the as-built diameter will not be known during design (since the casing thickness is determined by the contractor). As such, a casing thickness must be assumed for design. The structural engineer should work closely with the geotechnical engineer to determine a suitable casing thickness to assume based on expected driving conditions. A pile drivability analysis may be required for this. Otherwise, the following can typically be assumed:
   - ¼" inch for piles less than 14" in diameter
   - ⅜" inches for piles 14" to 18" in diameter
   - ½" inch for larger piles.

E. Steel casing for cast-in-place piling should be designated by nominal diameter, not inside diameter for 24 inch and smaller pile casings. Standard Specification Section 9-10.5 requires steel casings to meet ASTM A252, which is purchased by nominal diameter (outside diameter) and wall thickness. A pipe thickness should not be stated in the plans. As stated previously, the Standard Specifications require the contractor to determine the pile casing thickness required for driving.

F. Transverse spiral reinforcement shall be designed to resist the maximum shear in the pile. Avoid a spiral pitch of less than 3". The minimum spiral shall be a #4 bar at 9" pitch. If the pile to footing/cap connection is not a plastic hinge zone the volumetric requirements of AASHTO LRFD Article 5.13.4.6 need not be met.

G. Resistance factors for Strength Limit States shall be per the latest AASHTO LRFD Bridge Design Specifications. Resistance factors for Extreme Event Limit States shall be per the latest AASHTO Guide Specifications for LRFD Seismic Design.

H. Piles are typically assumed to be continuously supported. Normally, the soil surrounding a foundation element provides sufficient bracing against a buckling failure. Piles that are driven through very weak soils should be designed for reduced lateral support, using information from the Geotechnical Division as appropriate. AASHTO LRFD Article 10.7.4.2 may be used to estimate the column length for buckling. Piles driven through firm material normally can be considered fully supported for column action (buckling not critical) below the ground.

I. The axial load along the pile varies due to side friction. It is considered conservative, however, to design the pile for the full axial load plus the maximum moment. The entire pile is then typically reinforced for this axial load and moment.

J. In all cases of uplift, the connection between the pile and the footing must be carefully designed and detailed. The bond between the pile and the seal may be considered as contributing to the uplift resistance. This bond value shall be limited to 10 psi. The pile must be adequate to carry tension throughout its length. For example, a timber pile with a splice sleeve could not be used.

7.9.7 Pile Splices

Pile splices shall be avoided where possible. If splices may be required in timber piling, a splice shall be detailed on the plans. Splices between treated and untreated timber shall always be located below the permanent water line. Concrete pile splices shall have the same strength as unspliced piles.

7.9.8 Pile Lateral Design

The strength limit state for lateral resistance is only structural, though the determination of pile fixity is the result of soil-structure interaction. A failure of the soil does not occur; the soil will continue to displace at constant or slightly increasing resistance. Failure occurs when the pile reaches the structural limit state and this limit state is reached, in the general case, when the nominal combined bending, shear, and axial resistance is reached.

Piles resist horizontal forces by a combination of internal strength and the passive pressure resistance of the surrounding soil. The capacity of the pile to carry horizontal loads should be investigated using a soil/structural analysis. For more information on modeling individual piles or pile groups, see BDM Section 7.2, Foundation Modeling.

7.9.9 Battered Piles

As stated previously, battered piles shall not be used to resist lateral loads for new bridge foundations. Where battered piles are used, the maximum batter shall be 4½:12. Piles with batters in excess of this become very difficult to drive and the bearing values become difficult to predict. Ensure that battered piling do not intersect piling from adjacent footings within the maximum length of the piles.

7.9.10 Pile Tip Elevations and Quantities

Pile length quantities provided to PS&E are based on the estimated tip elevation given in the Geotechnical Report or the depth required for design whichever is greater. If the estimated tip elevation given in the Geotechnical Report is greater than the design tip elevation, overdriving the pile will be required. The Geotechnical Engineer should be contacted to evaluate driving conditions. Bridge Special Provision BSP050311D5.FB6 is required in the Special Provisions to alert the contractor of the additional effort needed to drive these piles.

Minimum pile tip elevations provided in the Geotechnical Report may need to be adjusted to lower elevations depending on the results of the lateral, axial, and uplift analysis. This would become the minimum pile tip elevation requirement for the contract specifications. If adjustment in the minimum tip elevations is necessary, or if the pile diameter needed is different than what was assumed for the Geotechnical Report, the Geotechnical Branch MUST be informed so that pile drivability can be re-evaluated.

Note that lateral loading and uplift requirements may influence (possibly increase) the number of piles required in the group if the capacity available at a reasonable minimum tip elevation is not adequate. This will depend on the soil conditions and the loading requirements. For example, if the upper soil is very soft or will liquefy, making the minimum tip elevation deeper is unlikely to improve the lateral response of the piles enough to be adequate. Adding more piles to the group or using a larger pile diameter to increase the pile stiffness may be the only solution.

7.9.11 Plan Pile Resistance

The Bridge Plan General Notes shall list the Ultimate Bearing Capacity (Nominal Driving Resistance, R_{ndr}) in tons. This information is used by the contractor to determine the pile casing thickness and size the hammer to drive the piles. The resistance for several piers may be presented in a table as shown in Figure 7.9.12-1. If overdriving the piles is required to reach the minimum tip elevation, the estimated amount of overdriving (tons) shall be specified in the Special Provisions with BSP050311D5.FB6.

THE PILES SHALL BE DRIVEN TO AN ULTIMATE BEARING CAPACITY AS FOLLOWS:	
PIER NO.	**ULTIMATE BEARING CAPACITY (TONS)**
1	**====**
4	**====**

Figure 7.9.12-1

The total factored pile axial loading must be less than ϕR_n for the pile design. Designers should note that the driving resistance might be greater than the design loading for liquefied soil conditions. This is not an overdriving condition. This is due to the resistance liquefied soils being ignored for design, but included in the driving criteria to place the piles.

Method II (Technique I) - Matrix Coefficient Definitions

The stiffness matrix, shown in Figure 7-B-1.b, containing the spring values and using the standard coordinate system is shown in Figure 7-B-1.a. The sign of all the terms must be determined based on the sign convention.

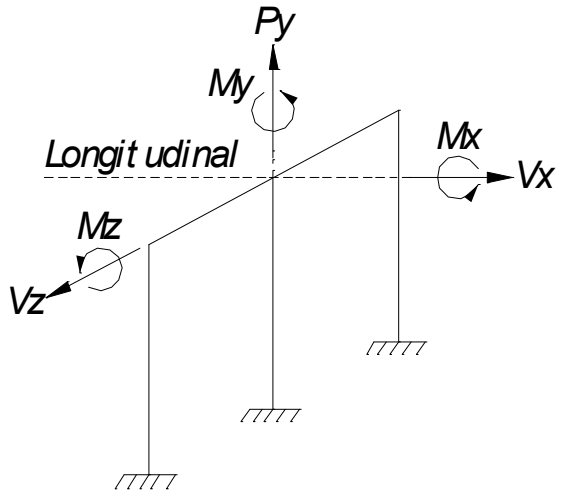

Standard Global Matrix
Figure 7-B-1.a

$$\begin{Bmatrix} & Vx & Py & Vz & Mx & My & Mz \\ Vx & K11 & 0 & 0 & 0 & 0 & K16 \\ Py & 0 & K22 & 0 & 0 & 0 & 0 \\ Vz & 0 & 0 & K33 & K34 & 0 & 0 \\ Mx & 0 & 0 & K43 & K44 & 0 & 0 \\ My & 0 & 0 & 0 & 0 & K55 & 0 \\ Mz & K61 & 0 & 0 & 0 & 0 & K66 \end{Bmatrix} \times \begin{Bmatrix} Disp. \\ \Delta x \\ \Delta y \\ \Delta z \\ \theta x \\ \theta y \\ \theta z \end{Bmatrix} = \begin{Bmatrix} Force \\ Vx \\ Py \\ Vz \\ Mx \\ My \\ Mz \end{Bmatrix}$$

Standard Global Matrix
Figure 7-B-1.b

Where the linear spring constants or K values are defined as follows using the Global Coordinates:

$K11 = +V_{x(app)}/+\Delta_x$	= Longitudinal Lateral Stiffness (kip/in)
$K22 = AE/L$	= Vertical or Axial Stiffness (k/in)
$K33 = -V_{z(app)}/-\Delta_z$	= Transverse Lateral Stiffness (k/in)
$K44 = +M_{x(app)}/+\theta_x$	= Transverse Bending or Moment Stiffness (kip-in/rad)
$K55 = JG/L$	= Torsional Stiffness (kip-in/rad)
$K66 = +M_{z(app)}/+\theta_z$	= Longitudinal Bending or Moment Stiffness (kip-in/rad)
$K34 = -Vz(ind)/+\theta_x$	= Transverse Lateral Cross-couple term (kip/rad)
$K16 = +V_{x(ind)}/+\theta_z$	= Longitudinal Lateral Cross-couple term (kip/rad)
$K43 = +M_{x(ind)}/-\Delta_z$	= Transverse Moment Cross-couple term (kip-in/in)
$K61 = +M_{z(ind)}/+\Delta_x$	= Longitudinal Moment Cross-couple term (kip-in/in)

Fixed Head vs. Free Head Spring Calculations

Fixed Head

If the shear and moment are creating deflection in OPPOSING directions where the spring is located, a fixed head boundary condition is required to model the loaded foundation in a finite element model. See Figure 7-B-1.c for the fixed head coordinate system assumed in the following spring calculations.

Since applying load to a fixed end results in no reaction, a soil/structure interaction analysis will generally analyze the shear and moment simultaneously as a free head. Using the soil response results, a cross-couple correction term will be required in a FEM to produce the induced moment in the element modeling the fixed head condition. If accurate stresses in fixed head element are not required, the cross-couple term may be omitted.

There are two ways to model fixed head pile group. The most common method for a column footing is to use a group spring to model a group of piles or shafts as one set of springs. This method uses six linear springs to represent the foundation behavior. Lateral loads resisted by Cross-couples terms do not apply and individual pile loads must be calculated from the FEM results.

The second method would be to model the individual piles. This is more helpful for analyzing local stresses in the foundation cap element and for each pile. Cross-couple terms may be included and individual pile loads are generated in the FEM.

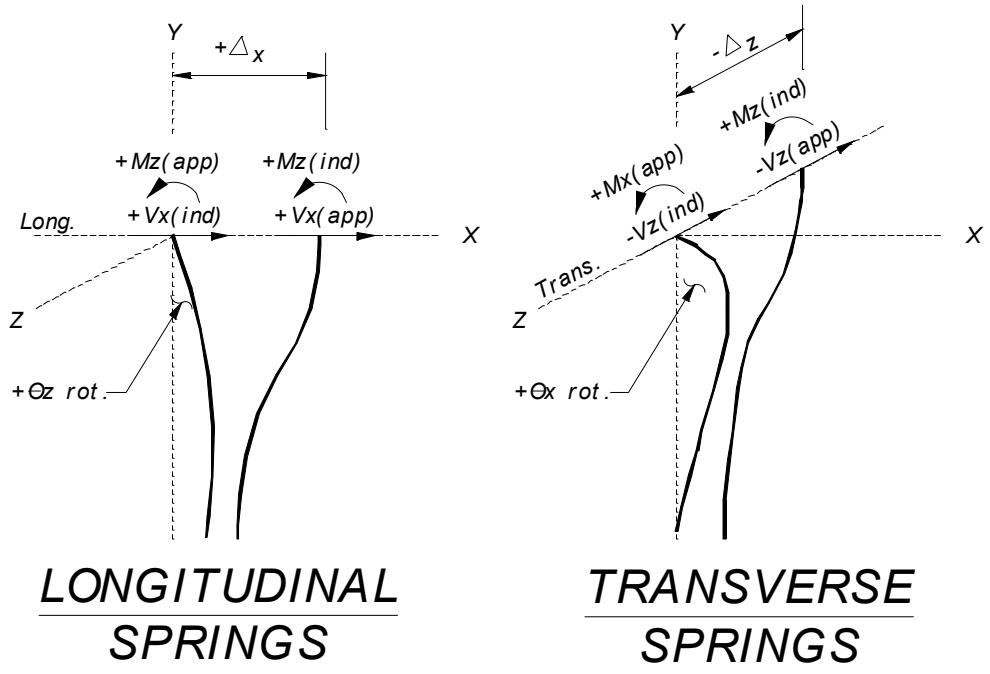

Fixed Head Coordinate System
Figure 7-B-1.c

Free Head

If the shear and moment are creating deflection in the SAME direction where the spring is located, a free head boundary condition is required to model the loaded foundation in a finite element model. If a free head boundary condition is assumed Method II (Technique II) described in BDM Section 7.2.5 must be used.

Vertical Springs (K22)

Vertical spring constants can be calculated from the following three assumptions. See Figure 7-B-1.e and the following definitions. REF: Page 6-30, Seismic Design of Highway Bridges Workshop Manual, Pub. No. FHWA-IP-81-2, Jan 1981.

A = Cross sectional area (in^2)
E = Young's modulus (ksi)
L = Length of pile (in)
F = Fraction of pile embedded

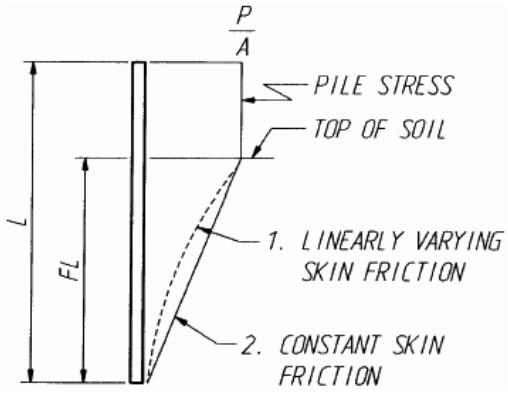

Pile Stress
Figure 7-B-1.d

Point Bearing Piles:

$$K22 = \frac{AE}{L}$$

Friction Piles w/ linearly varying skin friction:

$$K22 = \frac{AE}{\left(1 - \frac{2F}{3}\right)L}, \text{ with F = 1.0 (fully embedded), } K22 = 3\frac{AE}{L}$$

Friction Piles w/ constant skin friction:

$$K22 = \frac{AE}{\left(1 - \frac{F}{2}\right)L}, \text{ with F = 1.0, (fully embedded), } \quad K22 = 2\frac{AE}{L}$$

Torsional Springs (K55)

The DFSAP program calculates acceptable torsional spring values for shafts and may be used for foundation springs. In general, torsional spring constants for individual piles are based on the strength of the pile. The statics equation for torsional resistance is given below.

$$K55 = \frac{M}{\phi} = \frac{T}{\phi} = \frac{JG}{L}$$ where,

G = 0.4E
J = Torsional Moment of Inertia
L = Length of Pile

Lateral Springs (K11 & K33)

A fixed head lateral spring can be found by applying the shear and axial load in a soil response program with the rotation at the top equal to zero and finding the lateral deflection that results. The spring value is the applied shear divided by the resulting deflection.

$$K11 = \frac{V_{x(app)}}{\Delta_x} \text{ (longitudinal)}$$

$$K33 = \frac{V_{z(app)}}{-\Delta_z} \text{ (transverse)}$$

Rotational Springs (K44 & K66)

Ideally a fixed head boundary condition would result in no rotation. Therefore K44 & K66 would be infinitely stiff.

In the past the fixed head rotational springs where found by applying the moment and axial load in a soil response program with the translation at the top equal to zero and finding the rotation that results. The spring value is the applied moment divided by the resulting rotation.

$$K44 = \frac{M_{x(app)}}{\theta_x} \text{ (transverse)} \qquad K66 = \frac{M_{z(app)}}{\theta_z} \text{ (longitudinal)}$$

Cross-Couple Springs (K16, K34, K43 & K61)

Fixed Head

Cross-couple springs will not be symmetric for non-linear modeling foundation modeling. Since finite element programs will use matrix multiplication to generate reactions, doing the math is the easy way to show the effect of cross-couple terms. Note that K16 and K34 terms will have opposite signs.

$$\begin{Bmatrix} & Vx & Py & Vz & Mx & My & Mz \\ Vx & K11 & 0 & 0 & 0 & 0 & K16 \\ Py & 0 & K22 & 0 & 0 & 0 & 0 \\ Vz & 0 & 0 & K33 & K34 & 0 & 0 \\ Mx & 0 & 0 & K43 & K44 & 0 & 0 \\ My & 0 & 0 & 0 & 0 & K55 & 0 \\ Mz & K61 & 0 & 0 & 0 & 0 & K66 \end{Bmatrix} \times \begin{Bmatrix} Disp. \\ \Delta x \\ \Delta y \\ \Delta z \\ \theta x \\ \theta y \\ \theta z \end{Bmatrix} = \begin{Bmatrix} Force \\ Vx \\ Py \\ Vz \\ Mx \\ My \\ Mz \end{Bmatrix}$$

The longitudinal reactions are:

$$V_x = K11 \cdot \Delta_x + K16 \cdot \theta_z \text{ and } M_z = K61 \cdot \Delta_x + K66 \cdot \theta_z$$

The transverse reactions are:

$$V_z = K33 \cdot \Delta_z + K34 \cdot \theta_x \text{ and } M_x = K43 \cdot \Delta_z + K44 \cdot \theta_x$$

For a true fixed head boundary condition (translation only) in the X and Z directions, there will be no rotation about the X and Z axis. θ_x and θ_z will be zero (or approach zero). This means the K34 and K16 cross-couple terms will not affect the shear reactions. Likewise, the K66 and K44 rotational terms zero out and do not effect the moment reaction. This leaves the K61 and K43 cross-couple terms to generate induced moments based on the deflections in the X and Z directions. Designers should note, the cross-couple moments are applied to a fixed footing element and are resisted axially by the piles. This affects the local stress in the footing and axial loading of the pile much more than the column moment and shear, which is usually the primary focus for design.

K11 and K66 (or K33 and K44) alone do not predict the shape or reaction of the foundation element. The cross-couple term K16 (or K34) will add a shear force to correct the applied moment deflection.

Modeling real life features may be somewhat different than the theoretically true fixed condition. The top of a column at the superstructure or some pile and shaft applications may have opposing shear and moment, however the moment may be much less than the theoretical induced free head moment value. In other words, there may be significant rotations that need to be accounted for in the spring modeling. Designers need to be aware of this situation and use engineering judgment. The FEM would have rotations about the X and Z axis. θ_x and θ_z will NOT be zero and both the cross-couples terms and rotational springs may significantly affect the analysis.

The spring value for the lateral cross-couple term is the induced shear divided by the associated rotation.

$$K16 = \frac{V_{x(ind)}}{\theta_z} \text{ (longitudinal)} \qquad K34 = \frac{-V_{z(ind)}}{\theta_x} \text{ (transverse)}$$

The spring value for the moment cross-couple term is the induced shear divided by the associated rotation.

$$K61 = \frac{M_{x(ind)}}{-\Delta_z} \text{ (longitudinal)} \qquad K43 = \frac{M_{z(ind)}}{\Delta_x} \text{ (transverse)}$$

Method III – Non-Linear Springs

A finite element model may use non-linear springs based on PY curves to represent foundation response as shown in Figure 7-B-2.a. PY curves graph the relationship between the lateral soil resistance and the associated deflection of the soil. Generally, P stands for a force per unit length (of pile) such as kips per inch. Y is the corresponding horizontal deflection (of pile) in units such as inches.

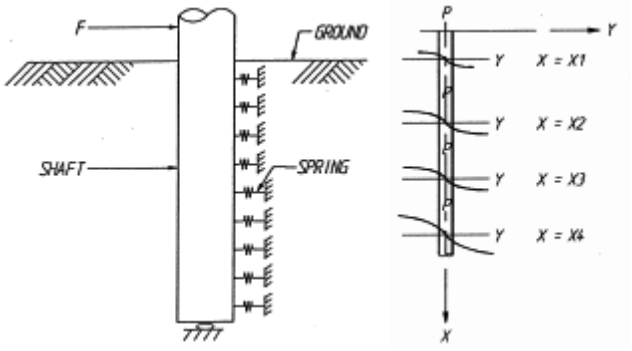

Pile Model using a Set of Non-linear PY Curves
Figure 7-B-2.a

Node placement for springs should attempt to imitate the soil layers. Generally, the upper ⅓ of the pile in stiff soils has the most significant contribution to the lateral soil reaction. Springs in this region should be spaced at most 3 feet apart. Spacing of 2.5 feet has demonstrated results within 10% of Lpile output moment and shear. Springs for the lower ⅔ of the pile can transition to a much larger spacing. Stiff foundations in weak soils will transfer loads much deeper in the soil and more springs would be sensible.

Transverse and longitudinal springs must include group reduction factors to analyze the structure/ soil response. Soil properties are modified in Lpile to account for Group Effects. Lpile then generates PY curves based on the modified soil properties and desired depths. See BDM Section 7.2.5 for Group Effects.

FEM programs will accept non-linear springs in a Force (F) vs. Deflection (L) format. P values in a PY curve must be multiplied by the pile length associated with the spring in the FEM. This converts a P value in Force/Length units to Force. This cannot be done during dynamic analysis with some FEM programs (including GTStrudl).

Soil Modulus - E_S

Soil Modulus is defined as the force per length (of a pile) associated with a soil deflection. As shown in Figure 7-B-2.b, E_S is a slope on the PY curve or P/Y. E_S is a secant modulus since the PY relationship is nonlinear and the modulus is a constant. The units are F/L per L or F/L^2, such as kips per square inch.

Subgrade Modulus - k_S

A closely related term is the Subgrade Modulus (or Modulus of Subgrade Reaction) provided in a Geotechnical Report. This is defined as the soil pressure associated with a soil deflection. The units are F/L^2 per L or F/L^3, such as kips per cubic inch.

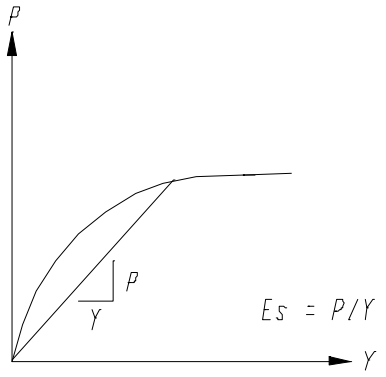

Secant Modulus Illustration
Figure 7-B-2.b

Method II (Technique I) – Pile Footing Matrix Example

A matrix with cross-couple terms is a valid method to model pile supported footings. The analysis assumes the piles will behave similar to a column fixed at the bottom (in the soil) with lateral translation only at the top (no rotation). This requires Fixed Head Boundary Condition to calculate spring values.

The Lpile program will solve for non-linear soil results for individual piles. See Group Effects in BDM Section 7.2.5 to reduce the soil properties of a pile in a group in both the transverse and longitudinal directions. This sample matrix calculates a foundation spring for an individual pile.

If a pile group has a large number of piles, the GPILE computer program is available to generate a spring matrix for the group. The program also computes individual pile loads and deflections from input loads. The output will contain a SEISAB {6 x 6} stiffness matrix. GTStrudl or SAP matrices have the same coefficients with a different axis orientation for the pile group.

The pile spring requires eight pile stiffness terms for a matrix as discussed in BDM Appendix 7-B-1. The following sample calculations discuss the lateral, longitudinal, and cross-couple spring coefficients for a GTStrudl local coordinate system. See Appendix 7-B-1 for axial and torsion springs.

The maximum FEM transverse and longitudinal seismic loads (Vy, Mz, Vz, My and axial Px) provide two loads cases for analysis in Lpile. The Lpile results of these two load cases will be used to calculate lateral, longitudinal, and cross-couple spring coefficients.

This sample calculation assumes there are no group effects. Only the longitudinal direction will be calculated, the transverse direction will be similar. A standard global coordinate system is assumed for the bridge. This sample will also assume a GTStrudl element is used to provide the foundation spring, which requires a different local axis coordinate system to input matrix terms, as shown in Figure 7-B-3.a. When the coordinate system changes, the sign convention of shear and moment also will change. This will be expressed in a 6x6 matrix by changing the location of the spring values and in sign of any cross-couple terms.

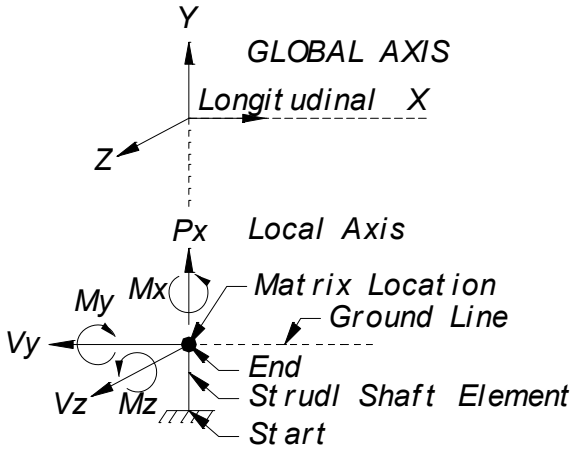

GTStrudl Local Axis Coordinate System
Figure 7-B-3.a

The locations of GTStrudl matrix terms are shown in Figure 7-B-1.b. The displacements are local and this requires the spring coefficients to be moved to produce the correct local reactions. The X axis is the new vertical direction. The Y axis is the new longitudinal direction. The spring coefficient definitions and notation remains the same as defined in BDM Appendix 7-B-1. Note the shift in diagonal terms and locations of the cross-couple terms.

$$\begin{Bmatrix} & Px & Vy & Vz & Mx & My & Mz \\ Px & K22 & 0 & 0 & 0 & 0 & 0 \\ Vy & 0 & K11 & 0 & 0 & 0 & K16 \\ Vz & 0 & 0 & K33 & 0 & K34 & 0 \\ Mx & 0 & 0 & 0 & K55 & 0 & 0 \\ My & 0 & 0 & K43 & 0 & K44 & 0 \\ Mz & 0 & K61 & 0 & 0 & 0 & K66 \end{Bmatrix} \times \begin{Bmatrix} Disp. \\ \Delta x \\ \Delta y \\ \Delta z \\ \theta x \\ \theta y \\ \theta z \end{Bmatrix} \equiv \begin{Bmatrix} Force \\ Px \\ Vy \\ Vz \\ Mx \\ My \\ Mz \end{Bmatrix}$$

GTStrudl Matrix in Local Coordinate System
Figure 7-B-3.b

Where the linear spring constants or K values are defined as follows (see Figure 7-B-3.c for direction and sign convention)

K11 = $-V_{y(app)}/-\Delta_y$ = Longitudinal Lateral Stiffness (kip/in)
K22 = AE/L = Vertical or Axial Stiffness (k/in)
K33 = $-V_{z(app)}/-\Delta_z$ = Transverse Lateral Stiffness (k/in)
K44 = $-M_{y(app)}/-\theta_y$ = Transverse Bending or Moment Stiffness (kip-in/rad)
K55 = JG/L = Torsional Stiffness (kip-in/rad)
K66 = $M_{z(app)}/\theta_z$ = Longitudinal Bending or Moment Stiffness (kip-in/rad)
K34 = $-V_{z(ind)}/-\theta_y$ = Transverse Lateral Cross-couple term (kip/rad)
K16 = $-V_{y(ind)}/+\theta_z$ = Longitudinal Lateral Cross-couple term (kip/rad)
K43= $-M_{y(ind)}/-\Delta_z$ = Longitudinal Moment Cross-couple term (kip-in/in)
K61 = $+M_{z(ind)}/-\Delta_y$ = Transverse Moment Cross-couple term (kip-in/in)

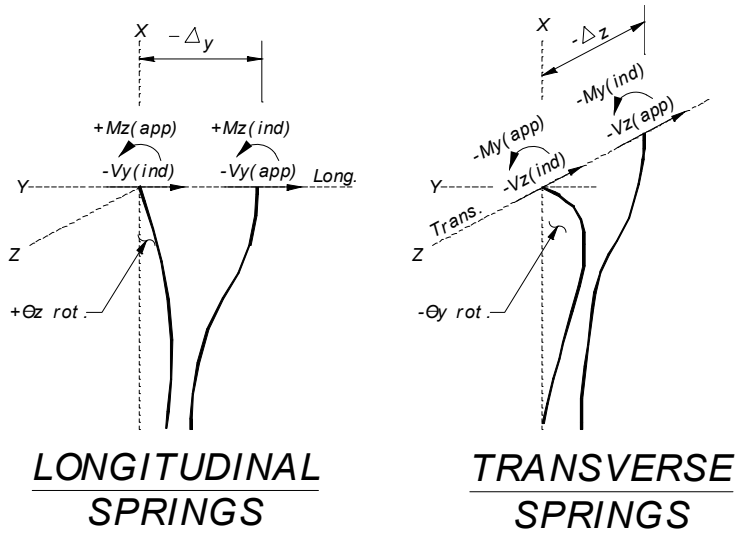

GTStrudl Local Coordinate System
Figure 7-B-3.c

Results from GTStrudl (local coordinate system)

P_x	= 50,000 lbs	(axial load)
V_y	= -60,000 lbs	(shear along longitudinal axis)
V_z	= -40,000 lbs	(shear along transverse axis)
M_y	= -2,230,000 lb-in	(moment about longitudinal axis)
M_z	= 3,350,000 lb-in	(moment about transverse axis)

Load Case 1 - Longitudinal Direction

Load case 1 applies the lateral load (V_y) and axial load (P_x), and restrains the top against rotation (slope = 0 rad).

Input to Lpile:

Boundary condition code	=	2
Lateral load at the pile head	=	-60000.000 lbs
Slope at the pile head	=	0.000 in/in
Axial load at the pile head	=	50000.000 lbs

Output from Lpile:

X	Deflection Δ_y	Moment $M_{z(ind)}$	Shear $V_{y(app)}$	Slope
in	in	lbs-in	lbs	Rad.
*****	**********	**********	**********	**********
0.000	-0.13576	3.761E+06	-60000.000	0.000000

Load Case 2 - Longitudinal Direction

Load case 2 applies the moment load (M_z) and axial load (P_x), and restrains the top against deflection (deflection = 0 rad).

Input to Lpile:

Boundary condition code	=	4
Deflection at the pile head	=	0.000 in
Moment at the pile head	=	3.350E+06 in-lbs
Axial load at the pile head	=	50000.000 lbs

Output from Lpile:

X	Deflection	Moment $M_{z(ind)}$	Shear $V_{y(ind)}$	Slope θ_z
in	in	lbs-in	lbs	Rad.
*****	**********	**********	**********	**********
0.000	0.00000	3.350E+06	-33027.667	0.001192

Springs Constants – Longitudinal Direction

$K11 = -V_{y(app)}/-\Delta_y$ = -60 kip/-0.13576 in = 442 kip/in
$K66 = M_{z(app)}/\theta_z$ = 3,350 kip-in/0.001192 rad = 2,810,403 kip-in/rad
$K16 = -V_{y(ind)}/+\theta_z$ = -33 kip/0.001192 rad = -27,685 kip/rad
$K61 = +M_{z(ind)}/-\Delta_y$ = 3,761 kip-in/-0.13576 in = -27,703 kip-in/in

$$\begin{Bmatrix} & Px & Vy & Vz & Mx & My & Mz \\ Px & K22 & 0 & 0 & 0 & 0 & 0 \\ Vy & 0 & 442\frac{kip}{in} & 0 & 0 & 0 & -27{,}685\frac{kip}{rad} \\ Vz & 0 & 0 & K33 & 0 & K34 & 0 \\ Mx & 0 & 0 & 0 & K55 & 0 & 0 \\ My & 0 & 0 & K43 & 0 & K44 & 0 \\ Mz & 0 & -27{,}703\frac{kip-in}{in} & 0 & 0 & 0 & 2{,}810{,}403\frac{kip-in}{rad} \end{Bmatrix} \times \begin{Bmatrix} Disp. \\ \Delta x \\ \Delta y \\ \Delta z \\ \theta x \\ \theta y \\ \theta z \end{Bmatrix} \equiv \begin{Bmatrix} Force \\ Px \\ Vy \\ Vz \\ Mx \\ My \\ Mz \end{Bmatrix}$$

Chapter 8 Walls & Buried Structures Contents

8.1 Retaining Walls 8.1-1
- 8.1.1 General 8.1-1
- 8.1.2 Common Types of Walls 8.1-1
- 8.1.3 Design 8.1-5
- 8.1.4 Miscellaneous Items 8.1-10

8.2 Miscellaneous Underground Structures 8.2-1
- 8.2.1 General 8.2-1
- 8.2.2 Design 8.2-1
- 8.2.3 References 8.2-4

Appendix A

Appendix 8.1-A Pre-approved Proprietary Wall Systems 8.1-A1-1
Appendix 8.1-A2-1 Sew Wall Elevation 8.1-A2-1
Appendix 8.1-A2-2 Sew Wall Elevation 8.1-A2-2
Appendix 8.1-A3-1 Soldier Pile/Tieback Wall Elevation 8.1-A3-1
Appendix 8.1-A3-2 Soldier Pile/Tieback Wall Details 1 of 2 8.1-A3-2
Appendix 8.1-A3-3 Soldier Pile/Tieback Wall Details 2 of 2 8.1-A3-3
Appendix 8.1-A3-4 Soldier Pile/Tieback Wall Fascia Panel Details 8.1-A3-4
Appendix 8.1-A3-5 Soldier Pile/Tieback Wall Detail Permanent Ground Anchor Details 8.1-A3-5
Appendix 8.1-A3-6 Soldier Pile/Tieback Wall Permanent Ground Anchor Details 8.1-A3-6
Appendix 8.1-A4-1 Soil Nail Layout 8.1-A4-1
Appendix 8.1-A4-2 Soil Nail Wall Section 8.1-A4-2
Appendix 8.1-A4-3 Soil Nail Wall Fascia Panel Details 8.1-A4-3
Appendix 8.1-A4-4 Soldier Pile/Tieback Wall Fascia Panel Details 8.1-A4-4
Appendix 8.1-A5-1 Noise Barrier on Bridge 8.1-A5-1
Appendix 8.1-A5-2 Cable Fence – Top Mount 8.1-A5-2
Appendix 8.1-A6-1 Cable Fence 8.1-A6-1
Appendix 8.1-A6-2 Cable Fence – Top Mount 8.1-A6-2

8.1 Retaining Walls

8.1.1 General

A retaining wall is a structure built to provide lateral support for a mass of earth or other material where a grade separation is required. Retaining walls depend either on their own weight, their own weight plus the additional weight of laterally supported material, or on a tieback system for their stability. Additional information is provided in Chapter 15 of the WSDOT Geotechnical Design Manual (GDM).

Standard designs for reinforced concrete cantilevered retaining walls, noise barrier walls (precast concrete, cast-in-place concrete, masonry, or timber), and geosynthetic walls are shown in the Standard Plans. The Region Design PE Offices are responsible for preparing the PS&E for retaining walls for which standard designs are available, in accordance with WSDOT Design Manual (DM) Section 1130.06. However, the Bridge and Structures Office may prepare PS&E for such standard type retaining walls if such retaining walls are directly related to other bridge structures being designed by the Bridge and Structures Office.

Structural earth wall (SE) systems meeting established WSDOT design and performance criteria have been listed as "pre-approved" by the Bridge and Structures Office and the Materials Laboratory Geotechnical Branch. The PS&E for "pre-approved" structural earth wall systems shall be coordinated by the Region Design PE Office with the Bridge and Structures Office, and the Materials Laboratory Geotechnical Branch, in accordance with DM 1130.06.

The PS&E for minor non-structural retaining walls, such as rock walls, gravity block walls, and gabion walls, are prepared by the Region Design PE Offices in accordance with WSDOT DM 1130.06, and any other design input from the Region Materials Office or Geotechnical Branch.

All other retaining walls not covered by the Standard Plans such as soil nail walls, soldier pile walls, soldier pile tieback walls and all walls beyond the scope of the designs tabulated in the Standard Plans, are designed in the Bridge and Structures Office according to the design parameters provided by the Materials Laboratory Geotechnical Branch.

The Hydraulics Branch of the Design Office should be consulted for walls that subject to floodwater or are located in a flood plain. The State Bridge and Structures Architect should review the architectural features and visual impact of the walls during the Preliminary Design stage. The designer is also directed to DM 1130 and Chapter 15 of the GDM, which provide valuable information on the design of retaining walls.

8.1.2 Common Types of Walls

The majority of walls used by WSDOT are one of the following six types:

1. Proprietary Structural Earth (SE) Walls - Standard Specification Section 6-13.
2. Standard Reinforced Concrete Cantilevered Retaining Walls- Standard Plans D-10.10-00 through D-10.45-00 and Standard Specification Section 6-11.
3. Soil Nail Walls - Standard Specification Section 6-15.

4. Soldier Pile Walls and Soldier Pile Tieback Walls - Standard Specification Sections 6-16 and 6-17.
5. Geosynthetic Walls (Temporary and Permanent) - Standard Plan D-3 and Standard Specification Section 6-14.
6. Noise Barrier Walls - Standard Plan D-2a through D-2y and Standard Specification Section 6-12.

Other wall systems, such as secant pile or cylinder pile walls, may be used based on the recommendation of the Geotechnical Branch. These walls shall be designed in accordance with the current AASHTO LRFD Specifications.

A. Pre-approved Proprietary Walls

A wall specified to be supplied from a single source (patented, trademark, or copyright) is a proprietary wall. Walls are generally pre-approved for heights up to 33 ft. The Materials Laboratory Geotechnical Branch will make the determination as to which pre-approved proprietary wall system is appropriate on a case-by-case basis. The following is a description of the most common types of proprietary walls:

1. Structural Earth Walls (SE)

   A structural earth wall is a flexible system consisting of concrete face panels or modular blocks that are held rigidly into place with reinforcing steel strips, steel mesh, welded wire, or geogrid extending into a select backfill mass. These walls will allow for some settlement and are best used for fill sections. The walls have two principal elements:

   - Backfill or wall mass: a granular soil with good internal friction (i.e. gravel borrow).
   - Facing: precast concrete panels, precast concrete blocks, or welded wire (with or without vegetation). At present, WSDOT has eight pre-approved proprietary wall systems as shown in the table in Appendix 8.1-A1. Design heights in excess of 33 feet shall be approved by the Materials Laboratory Geotechnical Branch. If approval is granted, the designer shall contact the individual structural earth wall manufacturers for design of these walls before the project is bid so details can be included in the Plans. See Appendix 8.1-A2 for details that need to be provided in the Plans for manufacturer designed walls. For additional information see the DM 1130 and Chapter 15 of the GDM. For the SEW shop drawing review procedure see Chapter 15 of the GDM.

2. Other Proprietary Walls

   Other proprietary wall systems such as crib walls, bin walls, or precast cantilever walls, can offer cost reductions, reduce construction time, and provide special aesthetic features under certain project specific conditions.

   For a list of these pre-approved proprietary walls and their height limitations, see Appendix 8.1-A1. The Region shall refer to DM 1130 for guidelines on the selection of wall types. The Materials Laboratory Geotechnical Branch and the Bridge and Structures Office Preliminary Plans Unit must approve the concept prior to development of the PS&E.

B. Geosynthetic Wrapped Face Walls

Geosynthetic walls use geosynthetics for the soil reinforcement and part of the wall facing. Use of geosynthetic walls as permanent structures requires the placement of a cast-in-place or shotcrete facing. Details for construction are shown in Standard Plan D-3.

C. Standard Reinforced Concrete Cantilever Walls

Reinforced concrete cantilever walls consist of a base slab footing from which a vertical stem wall extends. These walls are suitable for heights up to 35 feet. Details for construction are given in the Standard Plans D-10.10-00 to D-10.45-00.

The maximum bearing pressure on the soil is tabulated on page DM 1130-30 for the 6 types of walls.

These walls have been designed in accordance with the requirements of the AASHTO LRFD Bridge Design Specifications 4th Edition 2007 and interims through 2008.

1. Western Washington Walls (Types 1 through 4)

   a. The seismic design of these walls has been completed using and effective Peak Ground Acceleration of 0.51g.

   b. Active Earth pressure distribution was linearly distributed per current Bridge Design Manual section 7.7.4. The corresponding ka values used for design were 0.24 for wall Types 1 and 2, and 0.36 for Types 3 and 4.

   c. Seismic Earth pressure distribution was uniformly distributed per current Geotechnical Design Manual section 15.4.2.9, and was supplemented by AASHTO LRFD Bridge Design Specifications (Fig. 11.10.7.1-1). The corresponding kae values used for design were 0.43 for Types 1 and 2, and 0.94 for Types 3 and 4.

   d. Passive Earth pressure distribution was linearly distributed. The corresponding kp value used for design was 1.5 for all walls. For Types 1 and 2, passive earth pressure was taken over the depth of the footing. For Types 3 and 4, passive earth pressure was taken over the depth of the footing and the height of the shear key.

   e. The retained fill was assumed to have an angle of internal friction of 36 degrees and a unit weight of 130 pounds per cubic foot. The friction angle for sliding stability was assumed to be 32 degrees.

   f. Load factors and load combinations used per AASHTO LRFD Bridge Design Specifications 3.4.1-1 and 2. Stability analysis performed per AASHTO LRFD Bridge Design Specifications section 11.6.3 and C11.5.5-1&2.

   g. Wall Types 1 and 2 were designed for traffic barrier collision forces, as specified in AASHTO LRFD Bridge Design Specifications section A13.2 for TL-4. These walls have been designed with this force distributed over the distance between wall section expansion joints (48 feet).

2. Eastern Washington Walls (Types 5 through 6)

   a. The seismic design of these walls has been completed using and effective Peak Ground Acceleration of 0.2g.

   b. Active Earth pressure distribution was linearly distributed per current Bridge Design Manual section 7.7.4. The corresponding ka value used for design was 0.36.

   c. Seismic Earth pressure distribution was uniformly distributed per current Geotechnical Design Manual section 15.4.2.9, and was supplemented by AASHTO LRFD Bridge Design Specifications (Fig. 11.10.7.1-1). The corresponding kae value used for design was 0.55.

   d. Passive Earth pressure distribution was linearly distributed, and was taken over the depth of the footing and the height of the shear key. The corresponding kp value used for design was 1.5 for all walls.

e. The retained fill was assumed to have an angle of internal friction of 36 degrees and a unit weight of 130 pounds per cubic foot. The friction angle for sliding stability was assumed to be 32 degrees.

f. Load factors and load combinations used per AASHTO LRFD Bridge Design Specifications 3.4.1-1&2. Stability analysis performed per AASHTO LRFD Bridge Design Specifications section 11.6.3 and C11.5.5-1&2.

For nonstandard designs; wall design shall be designed in accordance with Section 3 and Section 11 of the AASHTO LRFD Bridge Design Specifications 4th Edition 2007 and interims through 2008. The major disadvantage of these walls is the low tolerance to post-construction settlement, which may require use of deep foundations (shafts or piling) to provide adequate support.

D. Soldier Pile Walls and Soldier Pile Tieback Walls

Soldier Pile Walls utilize wide flange steel members, such as W or HP shapes. The piles are usually spaced 6 to 10 feet apart. The main horizontal members are timber lagging designed to transfer the soil loads to the piles. For additional information see GDM Chapter 15.

See Appendix 8.1-A3.

E. Soil Nail Walls

The basic concept of soil nailing is to reinforce and strengthen the existing ground by installing steel bars called “nails” into a slope or excavation as construction proceeds from the “top down”. Soil nailing is a technique used to stabilize moving earth, such as a landslide, or as temporary shoring. Soil anchors are used along with the strength of the soil to provide stability. The Materials Laboratory Geotechnical Branch designs the soil nail system whereas the Bridge and Structures Office designs the wall fascia. Presently, the FHWA Publication ‘Manual for Design & Construction Monitoring of Soil Nail Walls’ is being used for structural design of the fascia. See Appendix 8.1-A4 for typical soil nail wall details.

F. Noise Barrier Walls

Noise barrier walls are primarily used in urban or residential areas to mitigate noise or to hide views of the roadway. Common types, as shown in the Standard Plans, include cast-in-place concrete panels (with or without traffic barrier), precast concrete panels (with or without traffic barrier), masonry blocks, and timber panels. The State Bridge and Structures Architect should be consulted for wall type selection. Design criteria for noise barrier walls are based on AASHTO’s *Guide Specifications for Structural Design of Sound Barriers*. Details of these walls are available in the Standard Plans D-2a to D-2y. DM 1140-3, figure 1140-1, tabulates the design wind speeds and various exposure conditions used to determine the appropriate wall type.

Placement of noise barrier walls on bridges and retaining walls should be avoided if possible. These structures are hazardous to the traffic below during seismic events or in case of vehicular impact. However, if necessary to place a noise barrier wall on a bridge or a retaining wall, see BDM Section 3.12 for the design requirements of these walls. See Appendix 8.1-A5-1 for typical noise barrier wall on bridge details.

Noise barrier walls on bridges and retaining walls are considered special design and shall be designed on a case by case basis. WSDOT Standard Plans for Noise Barrier Walls may not be used for these applications.

The design requirements for precast wall panel connections to bridge and retaining wall barriers are different than for cast-in-place construction. Changing the noise barrier wall type from cast-in-place to precast requires approval of the Bridge Design Engineer.

8.1.3 Design

A. General

All designs shall follow procedures as outlined in AASHTO LRFD Specifications Chapter 11, the GDM, and the Bridge Design Manual (BDM). The Materials Laboratory Geotechnical Branch will provide the earth pressure diagrams and other geotechnical design requirements for special walls to be designed in the Bridge and Structures Office. Pertinent soil data will also be provided for pre-approved proprietary structural earth walls (SEW), non-standard reinforced concrete retaining walls, and geosynthetic walls.

B. Non-Standard Reinforced Concrete Retaining Walls

In general, concrete for reinforced concrete retaining walls shall be Class 4000 Concrete with a 28-day compressive strength of 4,000 psi. Typical load combinations and load factors can be found in AASHTO LRFD Figures C11.5.5-1 and C11.5.5-2. The following chart represents additional criteria for evaluating the overall stability of the wall.

$$\frac{(FS)P < 0.5}{W}$$

(P = total horizontal force on wall)
(W= total minimum vertical load)

For Standard Walls having a height (H) of 16 feet or less, the controlling load is the AASHTO LFD 10 kip collision load. This load occurs occasionally and will have a reduced factor of safety.

Wall Height, H	Overturning*		Sliding
Roadway Grade to Bottom of Footing	$\frac{\text{M abt. toe resist}}{\text{M abt. toe loads}}$	Location of Resultant*	$\frac{FS(EP + Sur \text{ or } 10k) < 0.5}{\text{Weight}}$
H, 16 feet or less for 10K collision load	greater than 1.5	within middle ½ of footing	F.S. = 1.2
H, 17 feet or more for all Wall load cases	greater than 2.0	within middle ½ of footing	F.S. = 1.5
Earthquake Group VII All Heights	greater than 1.5	Within middle ½ of footing	$\frac{FS(EP + EQ) < 0.5}{\text{Weight}}$ FS = 1.1

*Both cases shall be met for determining wall stability for the service load condition.

Factor of Safety (FS) Table

The 10 kip collision load shall be distributed over 16 feet. This is the minimum wall length allowed for Type 2 Retaining Walls in the Standard Plans. In a special design, the AASHTO LRFD Extreme Event loading for vehicular collision must be analyzed. These loads are tabulated in LRFD Table A13.2-1. Although the current yield line analysis assumptions for this loading are not applicable to retaining walls, the transverse collision load (Ft) may be distributed over the longitudinal length (Lt) at the top of barrier. At this point, the load is distributed at a 45 degree angle into the wall. Future updates to the LRFD code will address this issue.

For sliding, the passive resistance in the front of the footing may be considered if the earth is more than 2 feet deep on the top of the footing and does not slope downward away from the wall. The design soil pressure at the toe of the footing shall not exceed the allowable soil bearing capacity supplied by the Materials Laboratory Geotechnical Branch. For retaining walls supported by deep foundations (shafts or piles), refer to *Bridge Design Manual* Sections 7.7.5, 7.8 and 7.9.

C. Soldier Pile Tieback Walls

1. See Principles of Anchor Design - AASHTO LRFD Specification 11.9 "Anchored Walls." The Materials Laboratory Geotechnical Branch will determine whether anchors can be used economically at a particular site based on the ability to install the anchors and develop anchor capacity. The presence of utilities or other underground facilities, and the ability to attain underground easement rights may also determine whether anchors can be installed.

   The anchor may consist of bars, wires, or strands. The choice of appropriate type is usually left to the Contractor but may be specified by the designer if special site conditions exist that preclude the use of certain anchor types. In general, strands and wires have advantages with respect to tensile strength, limited work areas, ease of transportation, and storage. However, bars are more easily protected against corrosion, and are easier to develop stress and transfer load.

   The geotechnical report will provide a reliable estimate of the nominal pullout resistances of the anchor, recommended anchor installation angles (typically 10° to 45°), no-load zone dimensions, and any other special requirements for wall stability for each project. AASHTO LRFD Section C11.9.5.1 outlines two procedures to determine the anchor design force. The capacity of each anchor shall be verified by testing. Testing shall be during the anchor installation (See Standard Specification Section 6-17.3(8) and GDM).

2. Corrosion Protection

   The Materials Laboratory Geotechnical Branch will specify the appropriate protection system; the two primary types are:

   a. Simple Protection: The use of simple protection relies on Portland cement grout to protect the tendon, bar, or strand in the bond zone. The unbonded lengths are sheaths filled with anti-corrosion grease, heat shrink sleeves, and secondary grouting after stressing. Except for secondary grouting, the protection is usually in place prior to insertion of the anchor in the hole.

   b. Double Protection: a corrugated PVC, high-density polyethylene, or steel tube accomplishes complete encapsulation of the anchor tendon. The same provisions of protecting the unbonded length for simple protection are applied to those for double protection.

3. Determination of Tieback Spacing

   The preliminary anchor spacing can be determined from AASHTO LRFD C11.9.5.1. Typical pile spacing (horizontal) of 6 to 10 feet and anchor spacing (vertical) of 8 to 12 feet are commonly used. The minimum spacing of 4 feet in both directions is not recommended because it can cause a loss of effectiveness due to disturbance of the anchors during installation.

4. Design of Soldier Pile Tieback Walls

   a. Lateral Earth Pressures

      (1) Active pressure is assumed to act over one pile spacing above the base of excavation in front of the wall, and over the shaft diameter below the base of excavation in front of the wall. Passive pressure usually acts over three times the shaft diameter or pile spacing, whichever is smaller.

(2) For permanent ground anchors, the anchor DESIGN LOAD, T, shall be according to AASHTO LRFD Specifications. For temporary ground anchors, the anchor DESIGN LOAD, T, may ignore extreme event load cases.

(3) The lock-off load is 60 percent of the controlling factored design load for temporary and permanent walls (see GDM Chapter 15).

b. Depth of Embedment

For cantilever soldier piles without permanent ground anchors, the embedment should be determined to satisfy horizontal force equilibrium and moment equilibrium about the bottom of the soldier pile.

For soldier piles with permanent ground anchors, the depth of embedment is determined by moment equilibrium of lateral force about the bottom of the soldier pile. Minimum embedment shall be 10 feet or as recommended by the Materials Laboratory Geotechnical Branch.

c. Design of Lagging

Lagging for soldier pile walls, with and without permanent ground anchors, shall be designed as either temporary or permanent, based on the conditions described below.

The Geotechnical Services Branch will specify when lagging shall be designed for an additional 250psf surcharge due to temporary construction load (and which shall also be shown in the Plan). The lateral pressure transferred from a moment slab shall be considered in the design of soldier pile walls and laggings.

The expected life cycle of timber lagging is considered to be less than the service life of the structure, namely 75 years for all walls and 20 years for timber lagging designed in accordance with LRFD Design Specifications. This limited service life of the lagging shall be considered when timber lagging is specified as the permanent fascia. Therefore timber lagging shall be used only if a permanent fascia is applied to the wall or less than 20 years of service life of the wall is acceptable for the specific project.

Hem-fir wood species, due to the inadequate durability in wet condition, shall not be used for timber lagging.

(1) Temporary Timber Lagging

The temporary lagging is based on a maximum 36 month service life before a permanent fascia is applied over the lagging. The design of temporary lagging shall be the responsibility of the contractor. The Geotechnical Services Branch will specify a soil category that is to be referenced in a general note in the wall plan sheets. The design shall be based on the modified FHWA table, which will be included in Section 6-16.3(6) of the Standard Specifications (see BDM Table 8.1.3.C.4.c-1), for timber lagging or another material that the contractor proposes.

The contractor shall submit the lagging system to the Bridge & Structures Office for approval. The earth pressure diagram shall be included in the contract plans. The engineer shall provide the square foot surface area quantity of lagging as part of the complete set of wall quantities submitted with the wall plans at turn-in to the Bridge Projects Unit. The typical section shown in the contract plans shall show a generic fascia material and specify that the design is the contractor's responsibility (see BDM Appendix 8.1-A3-2).

Soil Type[1]	Exposed[2] Wall Height (ft)	[3]Minimum Thickness of Rough Cut Lagging for Clear Spans of:					
		5 ft	6 ft	7 ft	8 ft	9 ft	10 ft
A	0 - 25	2-inches	3-inches	3-inches	3-inches	4-inches	4-inches
	>25 - 60	3-inches	3-inches	3-inches	4-inches	4-inches	5-inches
B	0 - 25	3-inches	3-inches	3-inches	4-inches	4-inches	5-inches
	>25 - 60	3-inches	3-inches	4-inches	4-inches	5-inches	5-inches
C	0 - 15	3-inches	3-inches	4-inches	5-inches	(2)	(2)
	>15 - 25	3-inches	4-inches	5-inches	6-inches	(2)	(2)
	>25 - 35	4-inches	5-inches	6-inches	(2)	(2)	(2)

(1) Soil Type is defined in WAC 296-155 Safety Standards for Construction Work, Part N (Excavation, Trenching, and Shoring).

(2) For exposed wall heights exceeding the limits in the table above or where minimum rough cut lagging thicknesses is not provided, the contractor shall design the lagging following the current version of the AASHTO LRFD Bridge Design Specifications.

(3) Table modified from FHWA document "Lateral Support Systems and Underpinning" (Report No. FHWA-RD-75-130).

Table 8.1.3.C.4.c-1

(2) Permanent Timber Lagging

The Geotechnical Services Branch may require that temporary lagging be designed as a permanent structural element if the soils are classified as “Type C.” Lagging that is required to be in service for over 36 months in an exposed condition, based on construction considerations, financing, etc., shall be designed as a permanent structural element (see BDM Appendix 8.1-A3-3). Unless a reduction factor is provided by the Geotechnical Services Branch to account for soil arching effects, the lagging shall be designed for the full pressure diagram supplied for the soldier piles. The load shall be a uniform load applied along the effective lagging span (S) in the same manner as defined for temporary lagging. Lagging designed to this type of methodology should follow AASHTO LRFD Section 11.8.5.2 design procedures without soil arching.

Lagging, between soldier piles, can be made from several different types of materials, but the most common is timber. For design procedures of timber lagging see AASHTO LRFD Section 8.6. The size effect factor (CFb) should be considered 1.0, unless a specific size is shown in the wall plans. The wet service factor (CMb) should be considered 0.85 for a saturated condition at some point during the life of the lagging. The load applied to lagging should be applied at the critical depth. The design should include the option for the contractor to step the size of lagging over the height of tall walls, defined as walls over 15 feet in exposed face height.

Permanent lagging may be used with precast fascia panels. In this application, permanent is intended to last the design life cycle (75 years) of the wall. Timber lagging does not have this life cycle capacity, but can be used when both of the following are applicable:

(1) The wall will be replaced within a 20 year period or a permanent fascia will be added to contain the lateral loads within that time period.

And,

(2) The lagging is visible for inspections during this life cycle.

d. Design of Fascia Panels

Bridge Design, when appropriate, should consider shotcrete fascia walls in lieu of the comparatively more expensive cast-in-place concrete fascias, subject to structural and aesthetic requirements.

Cast-in-place concrete fascia panels shall be designed as a permanent load carrying member in accordance with AASHTO LRFD Section 11.8.5.2. The minimum structural thickness of these panels shall be 9 inches (more is required for walls with permanent ground anchors). Architectural treatment of concrete fascia panels shall be indicated in the plans.

Concrete strength shall not be less than 4,000psi at 28 days. The wall is to extend 2 feet minimum below the finish ground line adjacent to the wall.

Permanent drainage systems shall be provided to prevent hydrostatic pressures developing behind the wall. A cut that slopes toward the proposed wall will invariably encounter natural subsurface drainage. Vertical chimney drains or prefabricated drainage mats can be used for normal situations to collect and transport drainage to a weep hole or pipe located at the base of the wall. Installing horizontal drains to intercept the flow at a distance well behind the wall may control concentrated areas of subsurface drainage (see GDM Chapter 15).

When concrete fascia panels are placed on soldier piles, the design earth pressure diagram and a generalized detail of lagging with strongback (see Appendix 8.1-A3-5) shall be shown in the plans. This information will assist the contractor in designing formwork that does not overstress the piles while concrete is being placed.

Precast concrete fascia panels shall be designed to carry 100% of the load that could occur during the life of the wall. When timber lagging (including pressure treated lumber) is designed to be placed behind a precast element, conventional design practice is to assume that lagging will eventually fail and the load will be transferred to the precast panel. If another type of permanent lagging is used behind the precast fascia panel, then the design of the fascia panel will be controlled by internal and external forces other than lateral pressures from the soil (weight, temperature, Seismic, Wind, etc.). The connections for precast panels to soldier piles shall be designed for all applicable loads and the designer should consider rigidity, longevity (to cyclic loading, corrosion, etc.), and load transfer.

e. Design of Soldier Piles

The soldier piles shall be designed for shear, bending, and axial stresses according to the latest AASHTO LRFD and GDM design criteria. The bending moment shall be based on the elastic section modulus “S” for the entire length of the pile for Strength Load Cases. The plastic section modulus “Z” shall only be used for soldier pile design in Extreme Load Cases.

f. Lateral Deflection

The maximum anticipated lateral deflection at top of the soldier pile wall shall be shown in the Plans. This alerts the Contractor to the need to accommodate the actual lateral deflection when placing the concrete fascia during construction.

8.1.4 Miscellaneous Items

A. Drainage

All reinforced concrete retaining walls shall have 3-inch diameter weepholes located 6 inches above final ground line and spaced about 12 feet apart. In case the vertical distance between the top of the footing and final ground line is greater than 10 feet, additional weepholes shall be provided 6 inches above the top of the footing. No weepholes are necessary in cantilever wingwalls. Drainage features shall be detailed in the Plans.

Weepholes can get clogged up or freeze up, and the water pressure behind the wall may start to increase. In order to keep the water pressure from building, it is important to have well draining gravel backfill and underdrains. Appropriate details must be shown in the Plans.

No underdrain pipe or gravel backfill for drains is necessary behind cantilever wingwalls. A 3 foot minimum thickness of gravel backfill shall be shown in the Plans behind the cantilever wingwalls. Backfill material shall be included with the civil quantities (not the bridge quantities). If it is necessary to excavate existing material for the backfill, then this excavation shall be a part of the bridge quantities for "Structure Excavation Class A Incl. Haul".

B. Joints

For cantilevered and gravity walls, joint spacing should be a maximum of 24 feet on centers. For counterfort walls, joint spacing should be a maximum of 32 feet on centers. For soldier pile and soldier pile tieback walls with concrete fascia panels, joint spacing should be 24 to 32 feet on centers. For precast units, the length of the unit depends on the height and weight of each unit. Odd panels for all types of walls shall normally be made up at the ends of the walls. Every joint in the wall shall provide for expansion. For cast-in-place construction, a minimum of ½ inch premolded filler should be specified in the joints. A compressible back-up strip of closed-cell foam polyethylene or butyl rubber with a sealant on the front face is used for precast concrete walls.

No joints other than construction joints shall be used in footings except at bridge abutments and where substructure changes such as spread footing to pile footing occur. In these cases, the footing shall be interrupted by a ½ inch premolded expansion joint through both the footing and the wall. The maximum spacing of construction joints in the footing shall be 120 feet. The footing construction joints should have a 6-inch minimum offset from the expansion joints in the wall.

C. Architectural Treatment

The type of surface treatment for retaining walls is decided on a job-to-job basis. Consult the State Bridge and Structures Architect during preliminary plan preparation. The wall should blend in with its surroundings and complement other structures in the vicinity. The tops of walls are usually smooth flowing curves in elevation view. See Retaining Wall Standard Sheets for top of wall and ground line relationship and also for cambering of front of cantilevered retaining walls.

D. Shaft Backfill for Soldier Pile Walls

Specify control density fill (CDF, 145 pcf) for soldier pile shafts (full height) when shafts are anticipated to be excavated in the dry

When under water concrete placement is anticipated for the soldier pile shafts, specify pumpable lean mix.

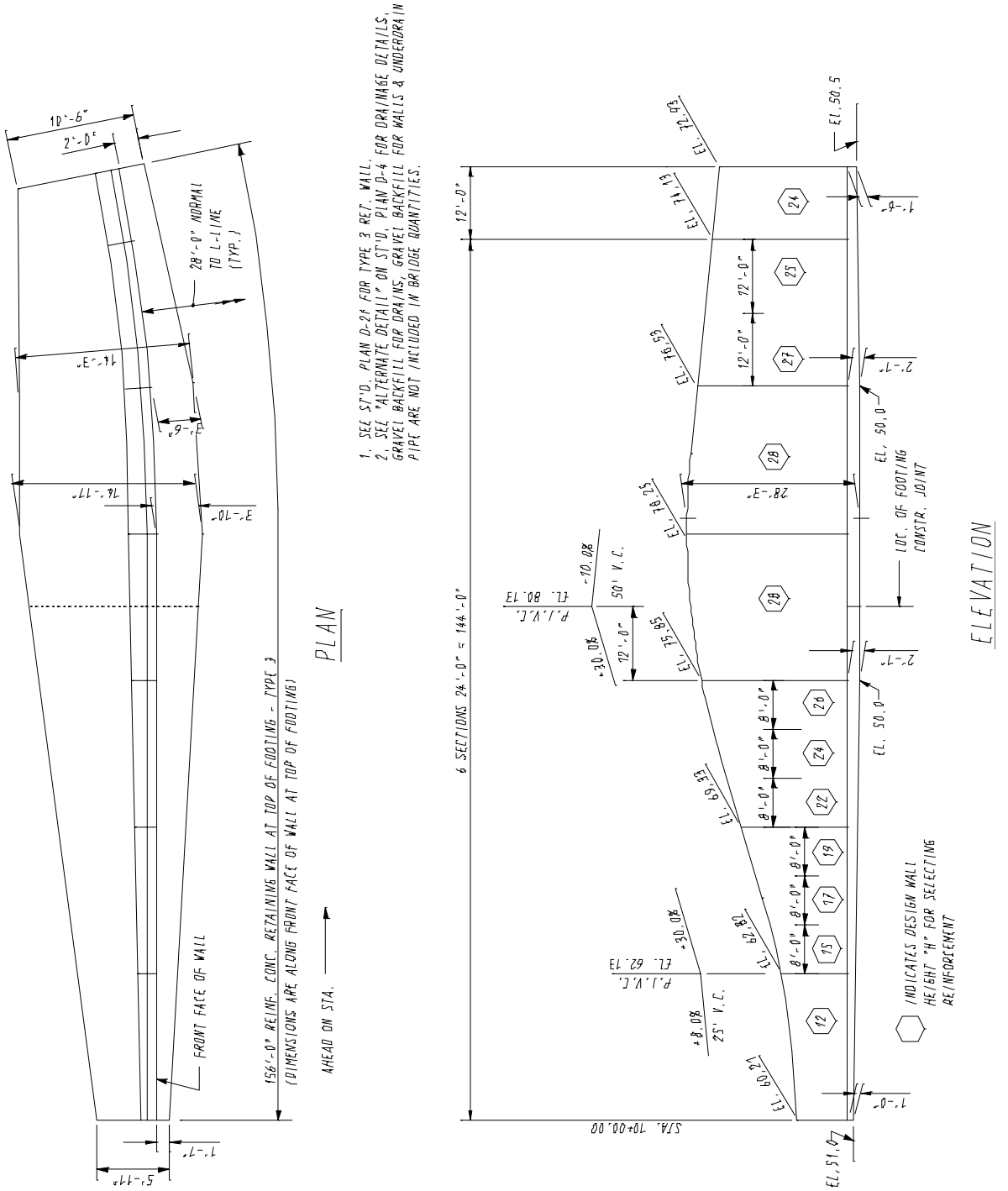
1. SEE STD. PLAN D-21 FOR TYPE 3 RET. WALL.
2. SEE "ALTERNATE DETAIL" ON STD. PLAN D-4 FOR DRAINAGE DETAILS.
GRAVEL BACKFILL FOR DRAINS, GRAVEL BACKFILL FOR WALLS & UNDERDRAIN
PIPE ARE NOT INCLUDED IN BRIDGE QUANTITIES.
PLAN
ELEVATION
AHEAD ON STA.
FRONT FACE OF WALL
156'-0" REINF. CONC. RETAINING WALL AT TOP OF FOOTING - TYPE 3
(DIMENSIONS ARE ALONG FRONT FACE OF WALL AT TOP OF FOOTING)
28'-0" NORMAL TO L-LINE (TYP.)
6 SECTIONS 24'-0" = 144'-0"
STA. 10+00.00
INDICATES DESIGN WALL HEIGHT "H" FOR SELECTING REINFORCEMENT
LOC. OF FOOTING CONSTR. JOINT
50' V.C.
25' V.C.
P.I.V.C.
EL. 80.73
EL. 62.73
EL. 50.5
EL. 50.0
EL. 51.0

Figure 8.1.4-1

E. Detailing of Standard Reinforced Concrete Retaining Walls

1. In general, the "H" dimension shown in the retaining wall Plans should be in foot increments. Use the actual design "H" reduced to the next lower even foot for dimensions up to 3 inches higher than the even foot.

   Examples: Actual height = 15′-3"↑, show "H" = 15' on design plans
   Actual height > 15′-3"↑, show "H" = 16' on design plans

   For walls that are not of a uniform height, "H" should be shown for each segment of the wall between expansion joints or at some other convenient location. On walls with a steep slope or vertical curve, it may be desirable to show 2 or 3 different "H" dimensions within a particular segment. The horizontal distance should be shown between changes in the "H" dimensions.

   The value for "H" shall be shown in a block in the center of the panel or segment. See Example, Figure 9.4.4-1.

2. Follow the example format shown in Figure 8.1.4-1.
3. Calculate approximate quantities using the Standard Plans.
4. Wall dimensions shall be determined by the designer using the Standard Plans.
5. Do not show any details given in the Standard Plans.
6. Specify in the Plans all deviations from the Standard Plans.
7. Do not detail reinforcing steel, unless it deviates from the Standard Plans.

8. For pile footings, use the example format with revised footing sizes, detail any additional steel, and show pile locations. Similar plan details are required for footings supported by shafts.

8.2 Miscellaneous Underground Structures

8.2.1 General

Miscellaneous underground structures consist of box culverts, precast reinforced concrete three-sided structures, detention vaults, metal pipe arches, and tunnels.

Generally, seismic design criteria does not control the design of underground structures unless the peak ground acceleration exceeds 0.3g, where g is the acceleration due to gravity. This is because the structures are supported on all sides by soil and rock, and move as a unit with the adjacent soil. See Reference by Miller and Constantino (1994). As with any structure, a geotechnical soils report with loading or pressure diagrams, settlement criteria, and ground water levels will be needed from the Materials Laboratory Geotechnical Services Branch in order to complete the design.

8.2.2 Design

A. Box Culverts

Box culverts are four-sided rigid frame structures and are either made from cast-in-place (CIP) reinforced concrete or precast concrete. In the past, standardized box culvert plan details were shown in the WSDOT Standard Plans, under the responsibility of the HQ Hydraulics Office. These former Standard Plans have been deleted and are no longer available. Now box culvert design is standardized under applicable AASHTO material specifications, and design plans are not required in the PS&E. Box culverts shall be in accordance with ASTM C1433.

B. Precast Reinforced Concrete Three-Sided Structures

Precast reinforced concrete three-sided structures are patented or trademarked rigid frame structures made from precast concrete. Some fabricators of these systems are: Utility Vault Company, Central Pre-Mix Prestress Company, and Bridge Tek, LLC. These systems require a CIP concrete or precast footing that must provide sufficient resistance to the horizontal reaction or thrust at the base of the vertical legs.

The precast concrete fabricators are responsible for the structural design and the preparation of shop plans. Precast reinforced concrete three sided structures, constructed in accordance with the current WSDOT General Special Provisions (GSP's) for these structures, shall be designed under AASHTO LRFD Bridge Specifications. The fabricators of systems which have received WSDOT pre-approval are specified in the GSP's. The bridge designer reviewing the project will be responsible for reviewing the fabricator's design calculations and details with consultation from the Construction Support Unit. Under the current GSP, precast reinforced concrete three sided structures are limited to spans of 26 feet or less. However, in special cases it may be necessary to allow longer spans, with the specific approval of the Bridge and Structures Office. Several manufacturers advertise spans over 40 feet.

C. Detention Vaults

Detention vaults are used for stormwater storage and are to be watertight. These structures can be open at the top like a swimming pool, or completely enclosed and buried below ground. Detention vaults shall be designed by the AASHTO LRFD Bridge Design Specification and the following: Seismic design effects shall satisfy the requirements of ACI 350.3-06 "Seismic Design of Liquid-Containing Concrete Structures." Requirements for Joints and jointing shall satisfy the requirements of ACI 350-06. Two references for tank design are the PCA publications *Rectangular Concrete Tanks*, Revised 5th Edition (1998) and *Design of Liquid-Containing Structures for Earthquake Forces* (2002).

The geotechnical field investigations and recommendations shall comply with the requirements given in 8.16 of the WSDOT Geotechnical Design Manual. In addition to earth pressures, water tables, seismic design, and uplift, special consideration should be given to ensure differential settlement either does not occur or is included in the calculations for forces, crack control and water stops.

Buoyant forces from high ground water conditions should be investigated for permanent as well as construction load cases so the vault does not float. Controlling loading conditions may include: backfilling an empty vault, filling the vault with stormwater before it is backfilled, or seasonal maintenance that requires draining the vault when there is a high water table. In all Limit States, the buoyancy force (WA) load factor shall be taken as $\gamma_{WA} = 1.25$ in AASHTO LRFD Table 3.4.1-1. In the Strength Limit State, the load factors that resist buoyancy (γ_{DC}, γ_{DW}, γ_{ES}, Etc.) shall be their minimum values, per AASHTO LRFD Table 3.4.1-2 and the entire vault shall be considered empty. During the vault construction, the water table shall be taken as the seal vent elevation or the top of the vault, if open at the top. In this case the load factors that resist buoyancy shall be their minimum values, except where specified as a construction load, per AASHTO LRFD Section 3.4.2. In certain situations tie-downs may be required to resist buoyancy forces. The resisting force (R_n) and resistance factors (ø) for tie-downs shall be provided by the Geotechnical Engineers. The buoyancy check shall be as follows:

For Buoyancy without tie-downs:

$$(R_{RE\,S} / R_{UPLIFT}) \geq 1.0$$

For Buoyancy with tie-downs:

$$(R_{RES} / [R_{UPLIFT} + øR_n]) \geq 1.0$$

Where:

$$R_{RE\,S} = \left| \gamma_{DC}\, DC + \gamma_{DW}\, DW + \gamma_{ES}\, ES + \gamma_i\, Q_i \right|$$

$$R_{UPLIFT} = \left| \gamma_{WA}\, WA \right|$$

ACI 350-06 has stricter criteria for cover and spacing of joints than the AASHTO LRFD Specifications. Cover is not to be less than 2 inches (ACI 7.7.1), no metal or other material is to be within 1-1/2 inches from the formed surface, and the maximum bar spacing shall not exceed 12 inches (ACI 7.6.5). Crack control criteria is per AASHTO LRFD 5.7.3.4 with $\gamma_e = 0.5$ (in order to maintain a crack width of 0.0085 inches, per the commentary of 5.7.3.4).

Joints in the vault's top slab, bottom slab and walls shall allow dissipation of temperature and shrinkage stresses, thereby reducing cracking. The amount of temperature and shrinkage reinforcement is a function of reinforcing steel grade "and length between joints (ACI Table 7.12.2-1). All joints shall have a shear key and a continuous and integral PVC waterstop with a 4-inch minimum width. The purpose of the waterstop is to prevent water infiltration and exfiltration. Joints having welded shear connectors with grouted keyways shall use details from WSDOT Precast Prestressed Slab Details or approved equivalent, with weld ties spaced at 4'-0" on center. Modifications to the above joints shall be justified with calculations. Calculations shall be provided for all grouted shear connections. The width of precast panels shall be increased to minimum the number of joints between precast units.

For cast-in-place walls in contact with liquid that are over 10' in height, the minimum wall thickness is 12". This minimum thickness is generally good practice for all external walls, regardless of height, to allow for 2 inches of cover as well as space for concrete placement and vibration.

After the forms are placed, the void left from the form ties shall be coned shaped, at least 1 inch in diameter and 1 1/2 inches deep, to allow proper patching.

Detention vaults that need to be located within the prism supporting the roadway are required to meet the following maintenance criteria. A by-pass piping system is required. Each cell in the vault shall hold no more then 6000 gallons of water to facilitate maintenance and cleanout operations. Baffles shall be water tight. Access hatches shall be spaced no more then 50 feet apart. There shall be an access near both the inlet and the outfall. These two accesses shall allow for visual inspection of the inlet and outfall elements, in such a manner that a person standing on the ladder, out of any standing water, will be in reach of any grab handles, grates or screens. All other access hatches shall be over sump areas. All access hatches shall be a minimum 30 inch in diameter, have ladders that extend to the vault floor, and shall be designed to resist HS-20 wheel loads with applicable impact factors as described below.

Detention vaults that need to be located in the roadway shall be oriented so that the access hatches are located outside the traveled lanes. Lane closures are usually required next to each access hatch for maintenance and inspection, even when the hatches are in 12’-0” wide shoulders.

A 16 kip wheel load having the dynamic load allowance for deck joints, in AASHTO LRFD Table 3.6.2.1-1, shall be applied at the top of access hatches and risers. The load path of this impact force shall be shown in the calculations.

Minimum vault dimensions shall be 4’-0” wide and 7’-0” tall; inside dimensions.

Original signed plans of all closed top detention vaults with access shall be forwarded to the Bridge Plans Engineer in the Bridge Project Unit (see Bridge Design Manual Section 12.4.10.B). This ensures that the Bridge Preservation Office will have the necessary inventory information for inspection requirements. A set of plans must be submitted to both the WSDOT Hydraulics Office and the Regional WSDOT Maintenance Office for plans approval.

D. Metal Pipe Arches

Soil Ph should be investigated prior to selecting this type of structure. Metal Pipe arches are not generally recommended under high volume highways or under large fills.

Pipe arch systems are similar to precast reinforced concrete three sided structures in that these are generally proprietary systems provided by several manufacturers, and that their design includes interaction with the surrounding soil. Pipe arch systems shall be designed in accordance with the AASHTO Standard Specifications for Highway Bridges, and applicable ACI design and ASTM material specifications.

E. Tunnels

Tunnels are unique structures in that the surrounding ground material is the structural material that carries most of the ground load. Therefore, geology has even more importance in tunnel construction than with above ground bridge structures. In short, geotechnical site investigation is the most important process in planning, design and construction of a tunnel. These structures are designed in accordance with the AASHTO LRFD Bridge Design Specifications.

Tunnels are not a conventional structure, and estimation of costs is more variable as size and length increase. Ventilation, safety access, fire suppression facilities, warning signs, lighting, emergency egress, drainage, operation and maintenance are extremely critical issues associated with the design of tunnels and will require the expertise of geologists, tunnel experts and mechanical engineers.

For motor vehicle fire protection, a standard has been produced by the National Fire Protection Association. This document, "NFPA 502 – Standard for Road Tunnels, Bridges, and Other Limited Access Highways", uses tunnel length to dictate minimum fire protection requirements:

300 feet or less: no fire protection requirements
300 to 800 feet: minor fire protection requirements
800 feet or more: major fire protection requirements

Some recent WSDOT tunnel projects are:

I-90 Mt. Baker Ridge Tunnel Bore Contract: 3105 Bridge No: 90/24N

This 1500 foot long tunnel is part of the major improvement of Interstate 90.Work was started in 1983 and completed in 1988. The net interior diameter of the bored portion, which is sized for vehicular traffic on two levels with a bike/pedestrian corridor on the third level, is 63.5 feet. The project is the world's largest diameter tunnel in soft ground, which is predominantly stiff clay. Construction by a stacked-drift method resulted in minimal distortion of the liner and insignificant disturbance at the ground surface above.

Jct I-5 SR 526 E-N Tunnel Ramp Contract: 4372 Bridge No: 526/22E-N

This 465 foot long tunnel, an example of the cut and cover method, was constructed in 1995. The interior dimensions were sized for a 25 foot wide one lane ramp roadway with a vertical height of 18 feet. The tunnel was constructed in 3 stages. 3 and 4 foot diameter shafts for the walls were placed first, a 2 foot thick cast-in-place top slab was placed second, then the tunnel was excavated, lined and finished.

I-5 Sleater-Kinney Bike/Ped. Tunnel Contract: 6031 Bridge No: 5/335P

This 122 foot long bike and pedestrian tunnel was constructed in 2002 to link an existing path along I-5 under busy Sleater-Kinney Road. The project consisted of precast prestressed slab units and soldier pile walls. Construction was staged to minimize traffic disruptions.

8.2.3 References

1. AASHTO LRFD Bridge Design Specifications, 4th Ed., w/Interims
2. AASHTO Standard Specifications for Highway Bridges, 17th Ed., 2002
3. ACI 350/350R-06 Code Requirements for Environmental Engineering Concrete Structures, ACI, 2006.
4. Munshi, Javeed A. *Rectangular Concrete Tanks*, Rev. 5th Ed., PCA, 1998.
5. Miller, C. A. and Constantino, C. J. "Seismic Induced Earth Pressure in Buried Vaults", PVP-Vol.271, *Natural Hazard Phenomena and Mitigation*, ASME, 1994, pp. 3-11.
6. Munshi, J. A. *Design of Liquid-Containing Concrete Structures for Earthquake Forces*, PCA, 2002.
7. NFPA 502, *Standard For Road Tunnels, Bridges, and Other Limited Access Highways*.

Wall Supplier	System Name	System Description	ASD/ LFD or LRFD?	Height, or Other Limita-tions	Year Initially Approved	Last Approved Update
The Reinforced Earth Co. 8614 Westwood Center Drive Suite 1100 Vienna, VA 22182 (703) 821-1175	Reinforced Earth Wall	Precast concrete 5'x5' facing panels and steel strip soil reinforcement	ASD/ LFD	33 ft	1987	Approved 10/30/04 (submitted 3/29/04)
L. B. Foster Company Foster Geotechnical 1660 Hotel Circle North, Suite 304 San Diego, CA 92108-2803 (619) 688-2400	Retained Earth Wall	Precast concrete 5'x5' facing panels and steel bar mat soil reinforcement	ASD/ LFD	33 ft	Unknown	Approved 10/30/04 (submitted 12/11/03)
SSL, LLC 4740 Scotts Valley Drive, Suite E Scotts Valley, CA 95066 (831) 430-9300	MSE Plus Wall	Precast concrete 5'x5' facing panels and steel welded wire strip soil reinforcement	ASD/ LFD	33 ft	1999	Approved 10/30/04 (submitted 9/16/03)
Tensar Earth Technologies, Inc. 5883 Glenridge Drive, Suite 200 Atlanta, GA 30328 (404) 250-1290	ARES Wall	Precast concrete 5'x5' facing panels and Tensar geogrid soil reinforcement	ASD/ LFD	33 ft	1998	Approved 10/30/04 (submitted 8/6/04)
Hilfiker Retaining Walls 3900 Broadway P.O. Box 2012 Eureka, CA 95503-5707 (707) 443-5093	Eureka Reinforced Soil Wall	Precast concrete 5'x5' facing panels and welded wire mat soil reinforcement	ASD/ LFD	33 ft	Unknown	
Hilfiker Retaining Walls 3900 Broadway P.O. Box 2012 Eureka, CA 95503-5707 (707) 443-5093	Welded Wire Retaining Wall	Welded wire facing that is continuous with welded wire soil reinforcement	ASD/ LFD	33 ft	Unknown	Approved 10/30/04 (submitted 9/15/03)
Keystone Retaining Wall Systems, Inc. 4444 West 78th Street Minneapolis, MN 55435 (952) 897-1040	KeySystem I Wall	Modular dry cast concrete block facing with steel welded wire ladder strip soil reinforcement	ASD/ LFD	33 ft	2001	Approved 10/30/04 (submitted 3/31/04)

Wall Supplier	System Name	System Description	ASD/ LFD or LRFD?	Height, or Other Limita-tions	Year Initially Approved	Last Approved Update
Tensar Earth Technologies, Inc. 5883 Glenridge Drive, Suite 200 Atlanta, GA 30328 (404) 250-1290	MESA Wall	Modular dry cast concrete block facing with Tensar geogrid soil reinforcement	ASD/ LFD	33 ft	2000	Approved 10/30/04 (submitted 4/19/04 and 9/22/04)
Nelson Wall 12356 Northup Way, Suite 109 Bellevue, WA 98005 (425) 861-8292	Nelson Wall	Precast concrete gravity wall (similar to Standard Plan Concrete cantilever wall)	ASD/ LFD	28 ft	1995	Approved 10/30/04 (submitted 9/12/03)
The Neel Company	T-Wall	Precast concrete modular wall	ASD/ LFD	25 ft	1994	Approved 11/10/04 (submitted 11/05/04)

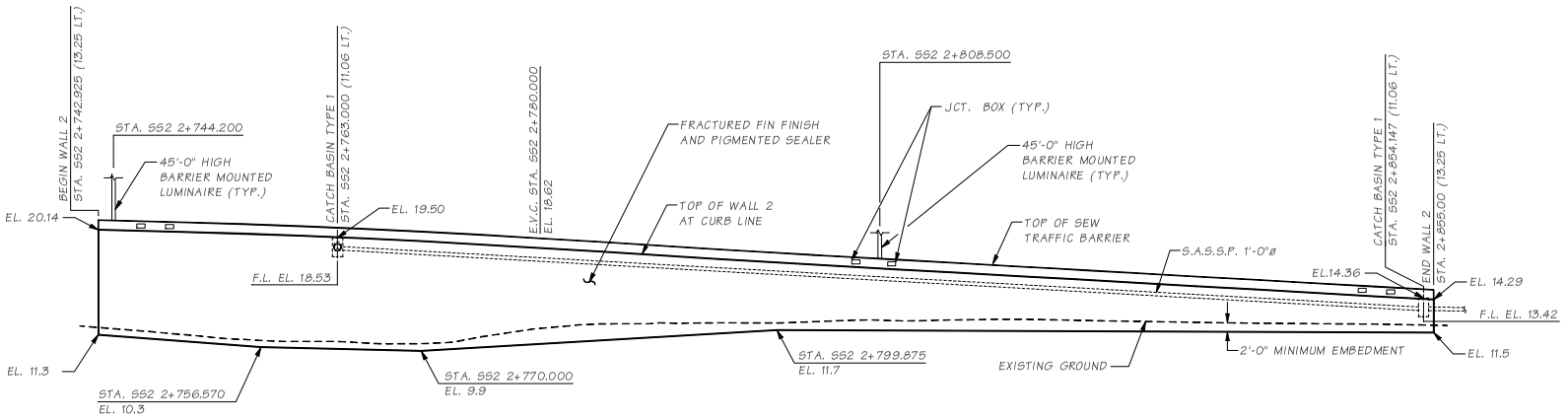

DEVELOPED ELEVATION

Bridge Design Engr.	M:\STANDARDS\Walls\MSE ELEV.MAN									
Supervisor										
Designed By					REGION NO.	STATE	FED. AID PROJ. NO.	SHEET NO.	TOTAL SHEETS	
Checked By					10	WASH.				
Detailed By					JOB NUMBER					
Bridge Projects Engr.										
Prelim. Plan By										
Architect/Specialist	DATE	REVISION	BY	APP'D						

Wed May 31 12:18:08 2006

BRIDGE AND STRUCTURES OFFICE

Washington State Department of Transportation

SEW WALL ELEVATION

BRIDGE SHEET NO.

SHEET OF SHEETS

SR JOB NO. SHEET

8.1-A2-1

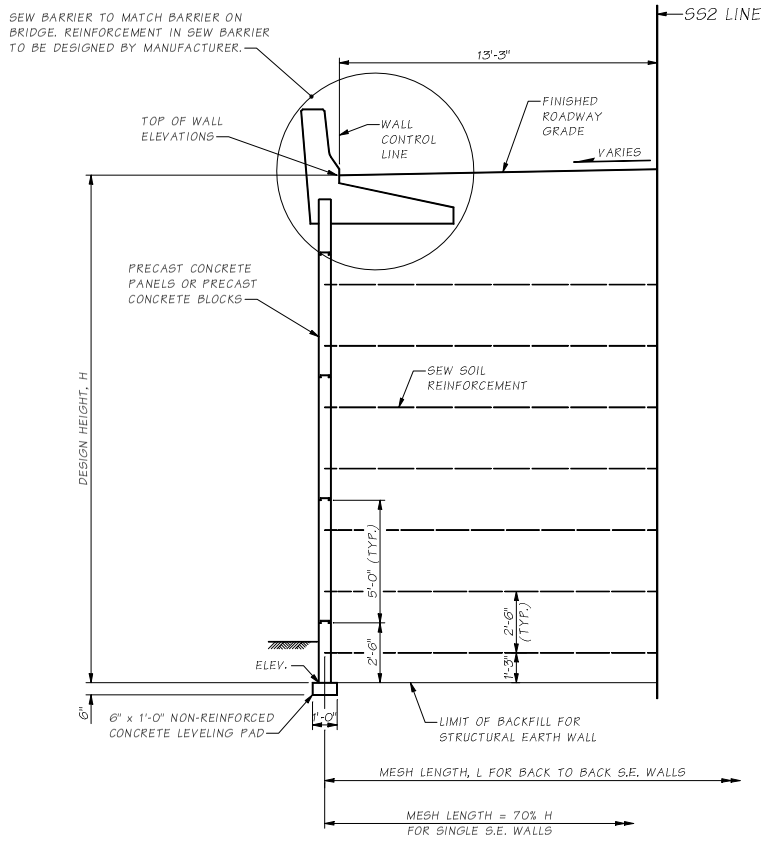

TYPICAL CROSS SECTION

Bridge Design Engr.	M:\STANDARDS\Walls\MSE SECTION.MAN				REGION NO.	STATE	FED. AID PROJ. NO.	SHEET NO.	TOTAL SHEETS	BRIDGE AND STRUCTURES OFFICE
Supervisor					10	WASH.				Washington State Department of Transportation
Designed By					JOB NUMBER					SEW WALL SECTION
Checked By										BRIDGE SHEET NO.
Detailed By										SHEET OF SHEETS
Bridge Projects Engr.										
Prelim. Plan By										
Architect/Specialist	DATE	REVISION	BY	APP'D						

Wed May 31 13:16:01 2006

SR ____ JOB NO. ____ SHEET ____

8.1-A2-2

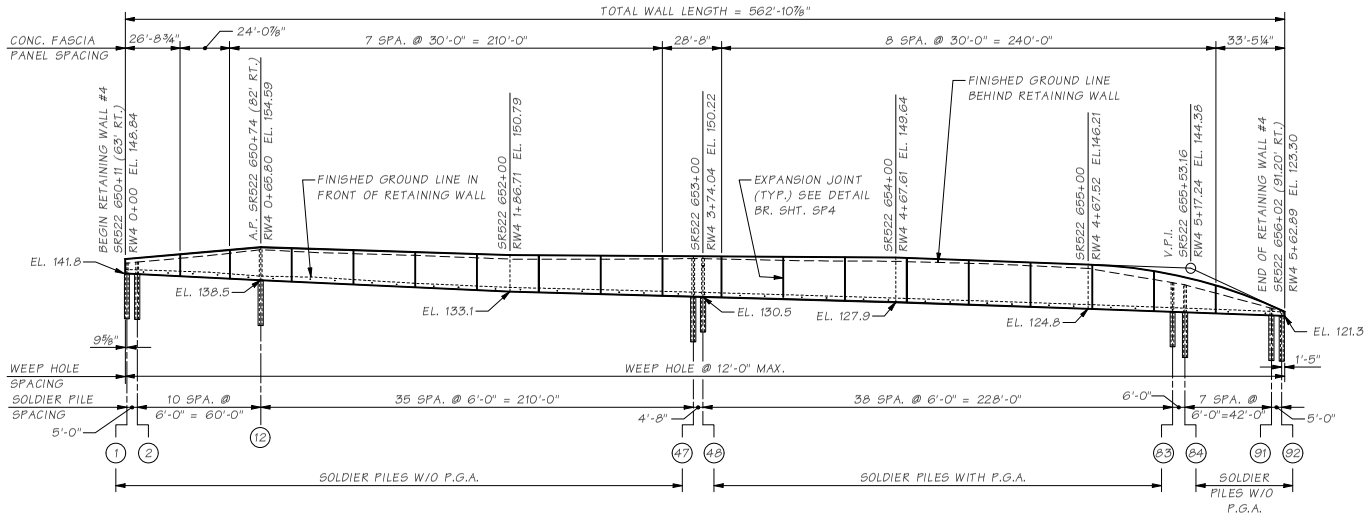

REFLECTED DEVELOPED ELEVATION

A.P. = ANGLE POINT

GENERAL NOTES

1. ALL MATERIAL AND WORKMANSHIP SHALL BE IN ACCORDANCE WITH THE REQUIREMENTS OF THE WASHINGTON STATE DEPARTMENT OF TRANSPORTATION STANDARD SPECIFICATIONS FOR ROAD, BRIDGE AND MUNICIPAL CONSTRUCTION-ENGLISH, DATED 2004, AND AMENDMENTS.
2. THIS STRUCTURE HAS BEEN DESIGNED IN ACCORDANCE WITH THE REQUIREMENTS OF THE AASHTO STANDARD SPECIFICATIONS FOR HIGHWAY BRIDGES SIXTEENTH EDITION - 1996 AND INTERIMS. ALL STRUCTURAL ELEMENTS HAVE BEEN DESIGNED IN ACCORDANCE WITH THE REQUIREMENTS FOR LOAD FACTOR DESIGN.
3. SOLDIER PILE SHAFTS WITH PERMANENT GROUND ANCHORS SHALL BE FILLED WITH CONCRETE CLASS 4000P BELOW THE TIMBER LAGGING. THE REMAINING PORTION OF THE SOLDIER PILE SHAFTS, INCLUDING THE FULL HEIGHT OF SOLDIER PILE SHAFTS WITHOUT PERMANENT GROUND ANCHORS, SHALL BE FILLED WITH CONTROLLED DENSITY FILL (CDF).
4. UNLESS OTHERWISE SHOWN IN THE PLANS, THE CONCRETE COVER MEASURED FROM THE FACE OF THE CONCRETE TO THE FACE OF ANY REINFORCING STEEL SHALL BE 1½".
5. SOLDIER PILES, BARS AND PLATES FOR THE SOLDIER PILE ASSEMBLY STIFFENERS AND TIE PLATES SHALL CONFORM TO ASTM A36. THE 8"ø EXTRA STRONG PIPE SHALL CONFORM TO THE REQUIREMENTS OF ASTM A53 GR. B OR A501.
6. ALL WELDING SHALL BE DONE TO MINIMIZE DISTORTION. THE WELDING SEQUENCES AND PROCEDURES TO BE USED SHALL BE SUBMITTED TO THE ENGINEER FOR APPROVAL PRIOR TO THE START OF WELDING.
7. ALL DIMENSIONS ARE HORIZONTAL AND VERTICAL UNLESS OTHERWISE SHOWN.
8. ALL DIMENSIONS SHOWN WITH DECIMALS ARE IN METERS AND ALL DIMENSIONS SHOWN WITHOUT DECIMALS ARE IN MILLIMETERS.

SOLDIER PILE/TIEBACK WALL

Bridge Design Engr.	M:\STANDARDS\Walls\SOLDIER TIEBACK ELEV.MAN				REGION NO.	STATE	FED. AID PROJ. NO.	SHEET NO.	TOTAL SHEETS	BRIDGE AND STRUCTURES OFFICE
Supervisor					10	WASH				Washington State Department of Transportation
Designed By					JOB NUMBER					SOLDIER PILE/TIEBACK WALL ELEVATION
Checked By										BRIDGE SHEET NO.
Detailed By										SHEET OF SHEETS
Bridge Projects Engr.										
Prelim. Plan By										
Architect/Specialist	DATE	REVISION	BY	APPD						

SR JOB NO. SHEET
8.1-A3-1
Fri Apr 25 15:23:22 2008

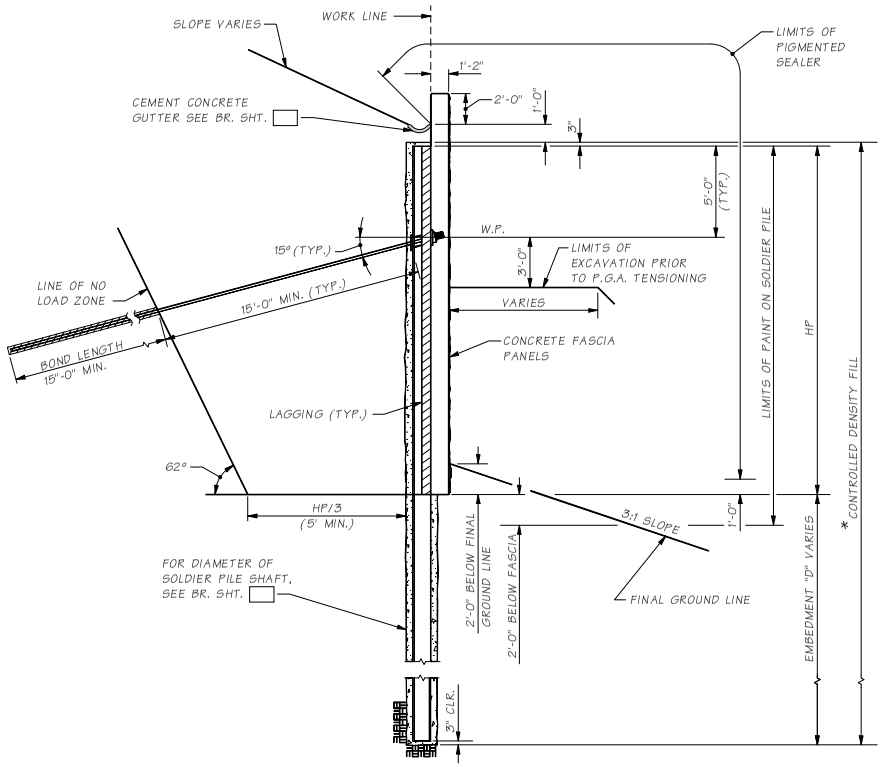

TYPICAL SECTION

SHOWN FOR SOLDIER PILE WITH P.G.A.
SIMILAR FOR SOLDIER PILE WITHOUT P.G.A.

P.G.A.= PERMANENT GROUND ANCHOR

LAGGING SYSTEM SHALL BE DESIGNED BY THE CONTRACTOR AND SUBMITTED TO THE ENGINEER FOR APPROVAL. THE SOIL TYPE FOR TIMBER LAGGING IS ____ .

* USE CONTROL DENSITY FILL WHEN PLACED IN THE DRY. USE LEAN PUMPABLE CONCRETE WHEN PLACED IN THE WET.

Note to Designer:

For walls with P.G.A. use a section size bigger than or equal to HP12x53 or W12x65

LAGGING IN SERVICE LESS THAN 36 MONTHS

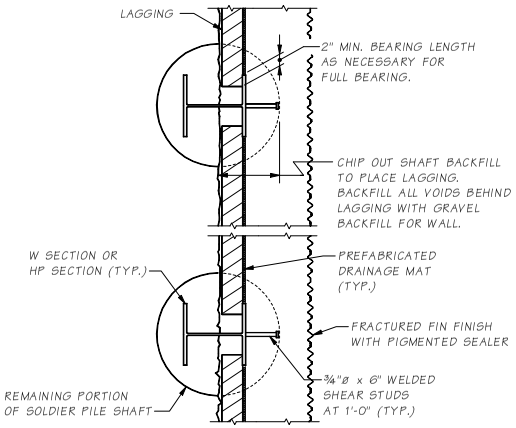

PLAN - SOLDIER PILE WALL WITHOUT P. G. A.

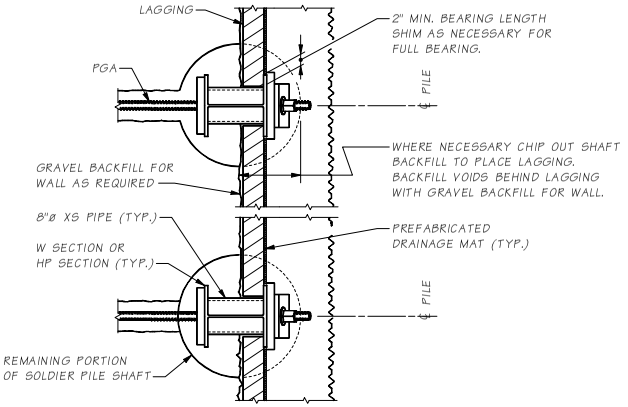

PLAN - SOLDIER PILE WALL WITH P. G. A.

Bridge Design Engr.	M:\STANDARDS\Walls\SOLDIER TIEBACK DETAILS A.MAN				REGION NO.	STATE	FED. AID PROJ. NO.	SHEET NO.	TOTAL SHEETS	BRIDGE AND STRUCTURES OFFICE
Supervisor					10	WASH.				Washington State Department of Transportation
Designed By										
Checked By					JOB NUMBER					SOLDIER PILE/TIEBACK WALL DETAILS 1 OF 2
Detailed By										BRIDGE SHEET NO.
Bridge Projects Engr.										SHEET OF SHEETS
Prelim. Plan By										
Architect/Specialist	DATE	REVISION	BY	APP'D						

SR ____ JOB NO. ____ SHEET ____

8.1-A3-2

Fri Feb 01 08:08:56 2008

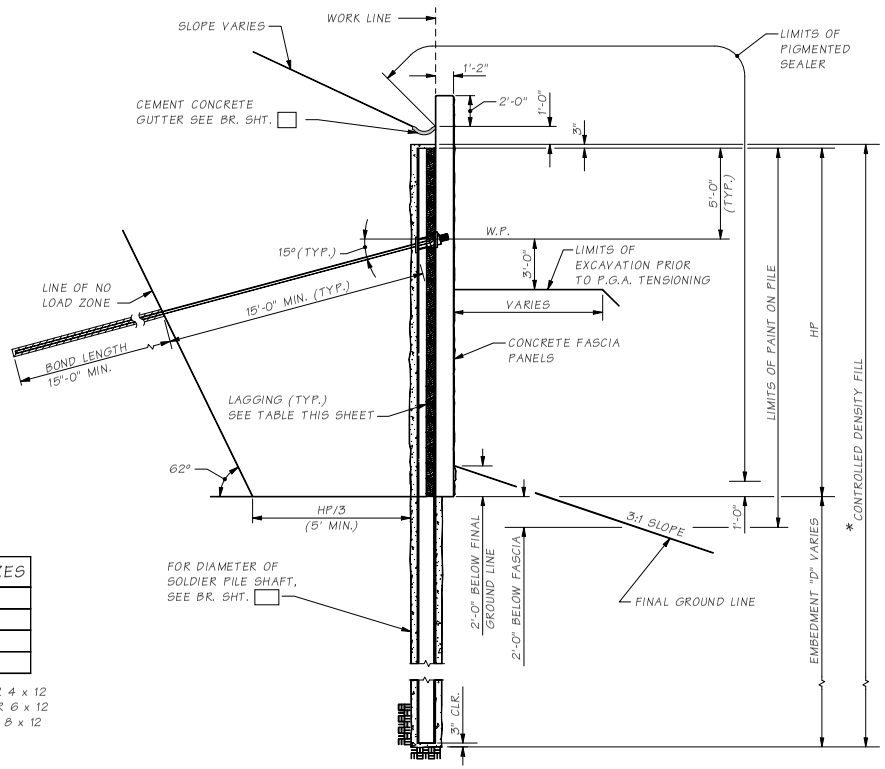

μ TIMBER LAGGING SIZES	
τ DEPTH (FT)	τ SIZE
0 - 9	4 x
9 - 18	6 x
18 - 30	8 x

4 x - OPTIONAL 4 x 8, 4 x 10 OR 4 x 12
6 x - OPTIONAL 6 x 8, 6 x 10 OR 6 x 12
8 x - OPTIONAL 8 x 8, 8 x 10 OR 8 x 12

TYPICAL SECTION

SHOWN FOR SOLDIER PILE WITH P.G.A.
SIMILAR FOR SOLDIER PILE WITHOUT P.G.A.

P.G.A.= PERMANENT GROUND ANCHOR

* USE CONTROL DENSITY FILL WHEN PLACED IN THE DRY. USE LEAN PUMPABLE CONCRETE WHEN PLACED IN THE WET.

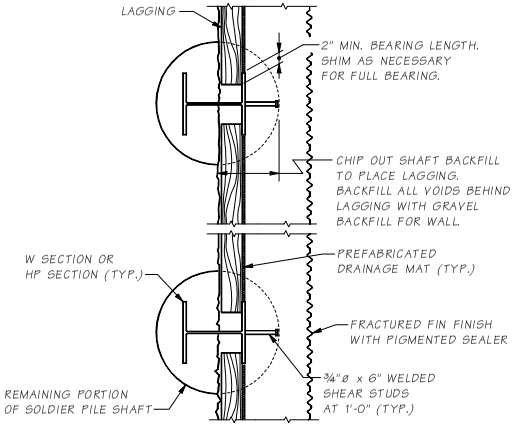

PLAN - SOLDIER PILE WALL WITHOUT P. G. A.

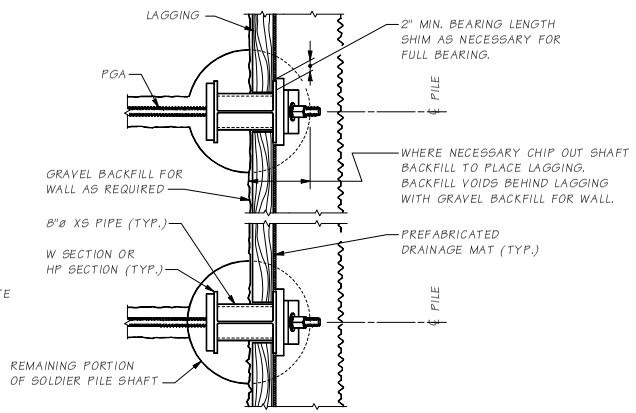

PLAN - SOLDIER PILE WALL WITH P. G. A.

Notes to Designer:

τ Depths and sizes shown are for example only. Fill in the table according to the earth pressure diagram and recommendations from the Geotechnical Services Branch, based on LRFD timber design for permanent lagging.

μ Determine, if possible, the length of time that the wall lagging will be used as the primary structural member in the transverse direction before a permanent wall fascia is applied.

For walls with P.G.A. use a section size bigger than or equal to HP12x53 or W12x65.

LAGGING IN SERVICE
36 MONTHS OR LONGER

Bridge Design Engr.	M:\STANDARDS\Walls\SOLDIER TIEBACK DETAILS B.MAN				REGION NO.	STATE	FED. AID PROJ. NO.	SHEET NO.	TOTAL SHEETS
Supervisor					10	WASH.			
Designed By					JOB NUMBER				
Checked By									
Detailed By									
Bridge Projects Engr.									
Prelim. Plan By									
Architect/Specialist	DATE	REVISION	BY	APP'D					

BRIDGE AND STRUCTURES OFFICE

Washington State Department of Transportation

SOLDIER PILE/TIEBACK WALL
DETAILS 1 OF 2

BRIDGE SHEET NO.
SHEET OF SHEETS

SR JOB NO. SHEET

8.1-A3-3

FR Feb 01 08:09:9 2008

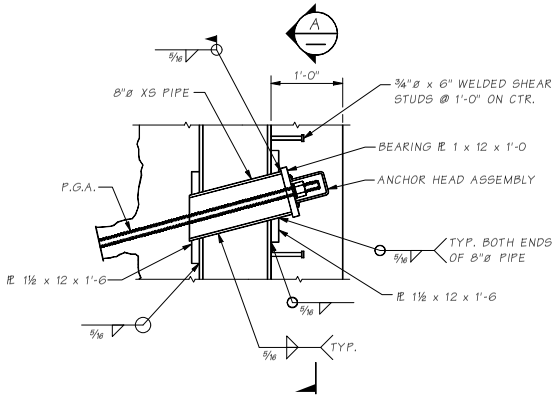

ELEVATION - SOLDIER PILE WITH P.G.A. THRU WEB

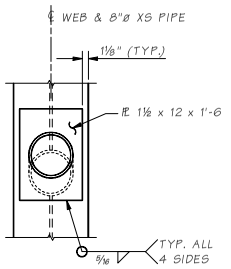

VIEW A

Notes to Designer:

1. Plates must be checked for size and welds. Plates are used to replace flange steel removed for pipe installation.
2. Weld must be checked along web to pipe and plate to flange. welds must be capable of tranferring PGA loads and flexural loads.

Bridge Design Engr.	M:\STANDARDS\Walls\SOLDIER TIEBACK DETAILS 2.MAN				REGION NO.	STATE	FED. AID PROJ. NO.	SHEET NO.	TOTAL SHEETS	BRIDGE AND STRUCTURES OFFICE
Supervisor					10	WASH.				Washington State Department of Transportation
Designed By					JOB NUMBER					SOLDIER PILE/TIEBACK WALL DETAILS 2 OF 2
Checked By										BRIDGE SHEET NO.
Detailed By										SHEET OF SHEETS
Bridge Projects Engr.										
Prelim. Plan By										
Architect/Specialist	DATE	REVISION	BY	APP'D						

SR. ____ JOB NO. ____ SHEET ____

8.1-A3-4

Fri Feb 01 08:08:28 2008

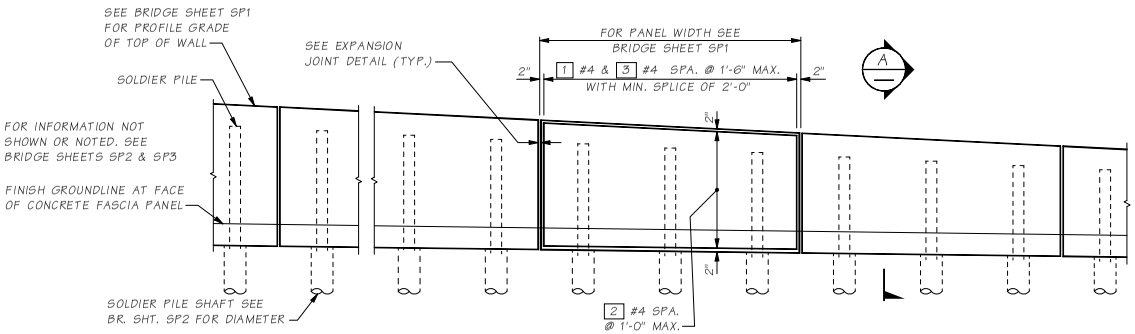

PARTIAL WALL ELEVATION

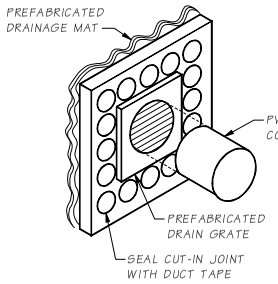

ISOMETRIC VIEW

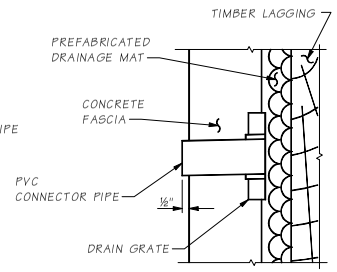

SECTIONAL VIEW

WEEP HOLE DRAIN DETAILS

DRAIN GRATE INSTALLATION SHALL NOT DISRUPT PREFABRICATED DRAINAGE MAT

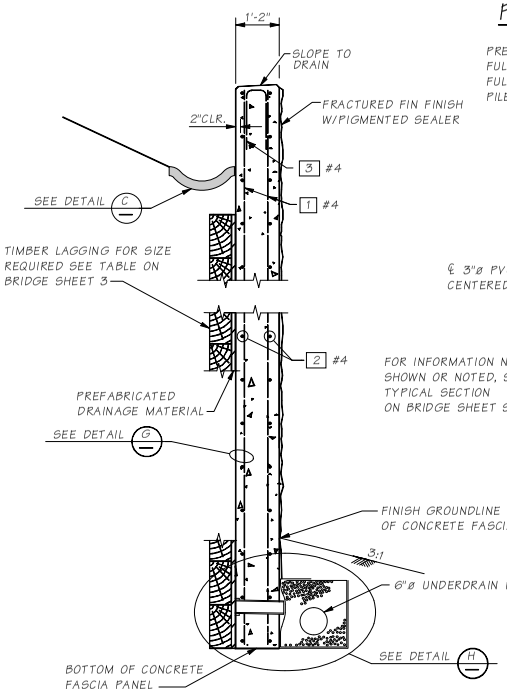

SECTION A

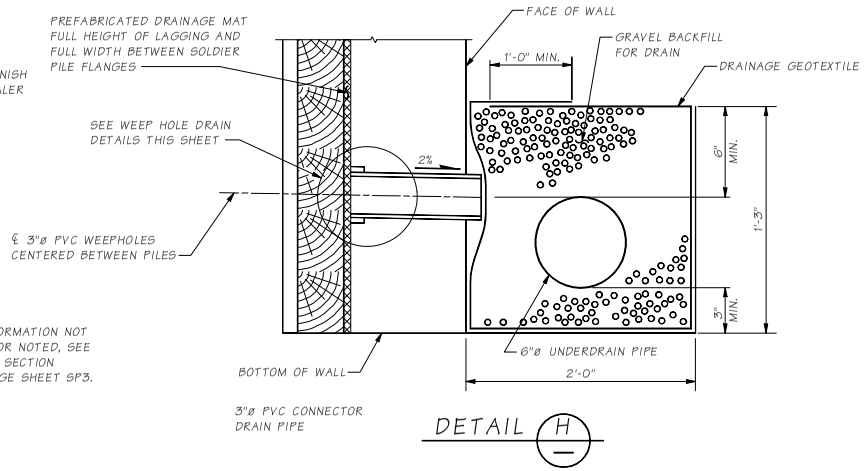

DETAIL H

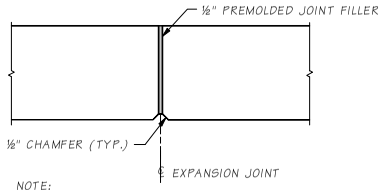

NOTE:
EXPANSION JOINTS SHALL BE LOCATED AS SHOWN ON BRIDGE SHEET SP1.

EXPANSION JOINT DETAIL

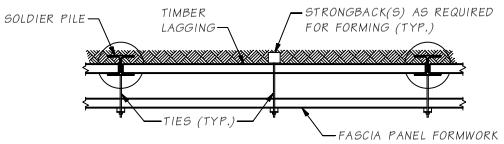

TYPICAL FASCIA PANEL FORMWORK

- SEE SPECIAL PROVISIONS FOR FASCIA PANEL FORMING.
- STRONGBACK(S) AND TIES SPACED AS REQUIRED TO CONTAIN POUR PRESSURE.

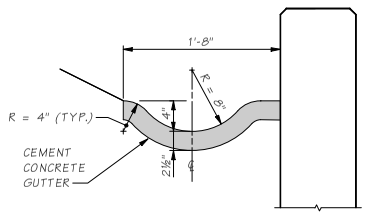

DETAIL C

Bridge Design Engr.	M:\STANDARDS\Walls\SOLDIER TIEBACK FASCIA.MAN								
Supervisor					REGION NO.	STATE	FED. AID PROJ. NO.	SHEET NO.	TOTAL SHEETS
Designed By					10	WASH.			
Checked By					JOB NUMBER				
Detailed By									
Bridge Projects Engr.									
Prelim. Plan By									
Architect/Specialist	DATE	REVISION	BY	APP'D					

Fri Feb 01 08:05:29 2008

BRIDGE AND STRUCTURES OFFICE

Washington State Department of Transportation

SOLDIER PILE/TIEBACK WALL FASCIA PANEL DETAILS

BRIDGE SHEET NO. | SHEET | OF | SHEETS

SR | JOB NO. | SHEET

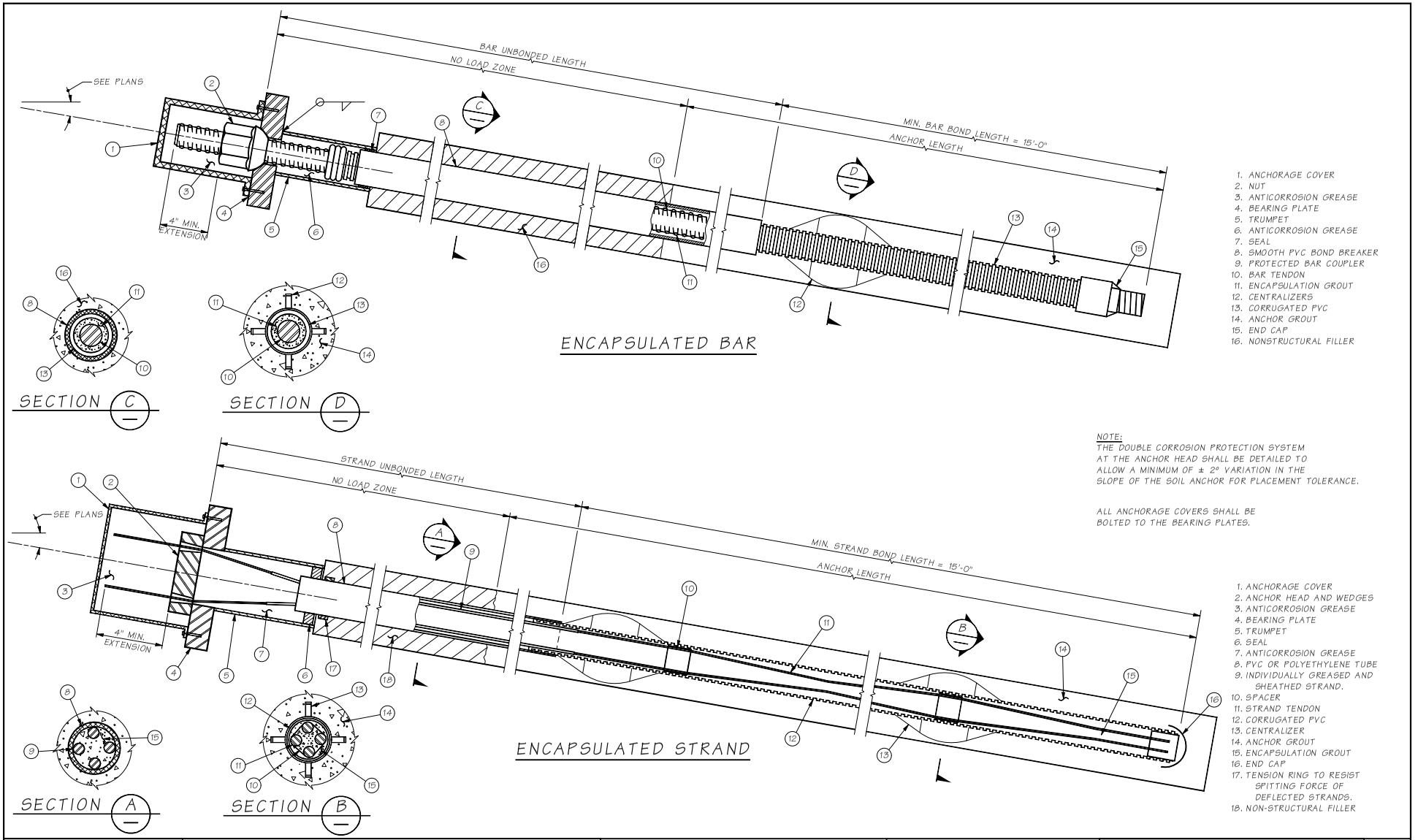

NOTE:
THE DOUBLE CORROSION PROTECTION SYSTEM AT THE ANCHOR HEAD SHALL BE DETAILED TO ALLOW A MINIMUM OF ± 2° VARIATION IN THE SLOPE OF THE SOIL ANCHOR FOR PLACEMENT TOLERANCE.

ALL ANCHORAGE COVERS SHALL BE BOLTED TO THE BEARING PLATES.

Bridge Design Engr.	M:\STANDARDS\Walls\PERMANENT GROUND ANCHOR.MAN				REGION NO.	STATE	FED. AID PROJ. NO.	SHEET NO.	TOTAL SHEETS
Supervisor					10	WASH.			
Designed By					JOB NUMBER				
Checked By									
Detailed By									
Bridge Projects Engr.									
Prelim. Plan By									
Architect/Specialist	DATE	REVISION	BY	APPD					

JOB NO. SHEET
SR 8.1-A3-6

Fri Apr 25 10:27:46 2008

BRIDGE AND STRUCTURES OFFICE

Washington State Department of Transportation

SOLDIER PILE/TIEBACK WALL
PERMANENT GROUND ANCHOR DETAILS

BRIDGE SHEET NO.
SHEET OF SHEETS

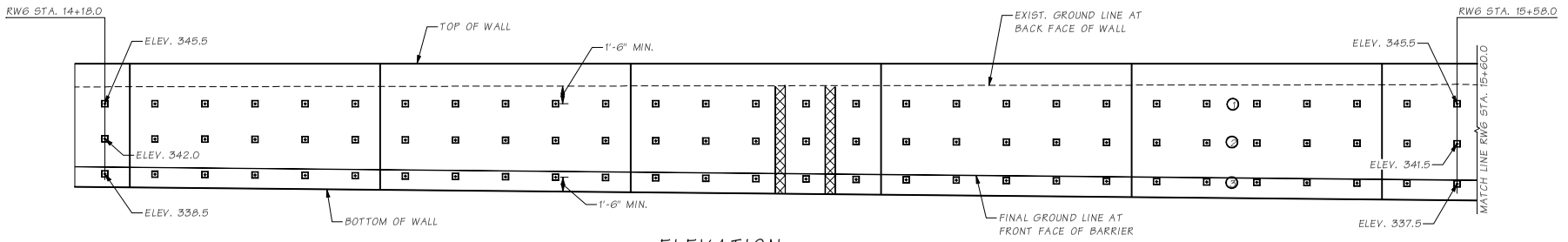

ELEVATION

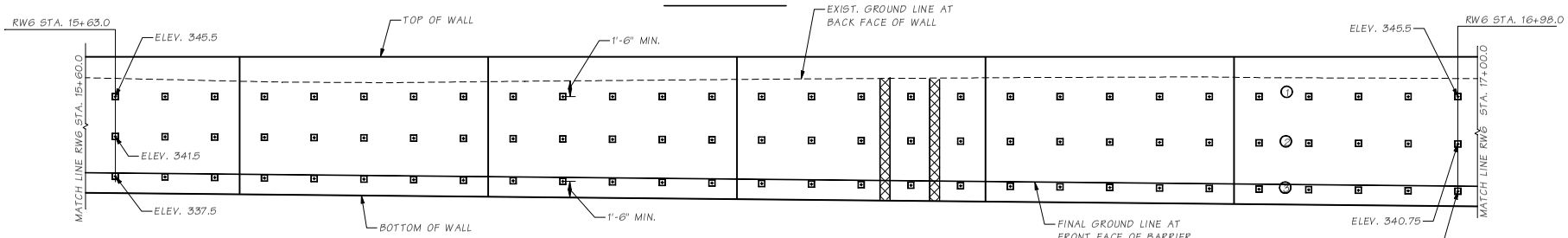

ELEVATION

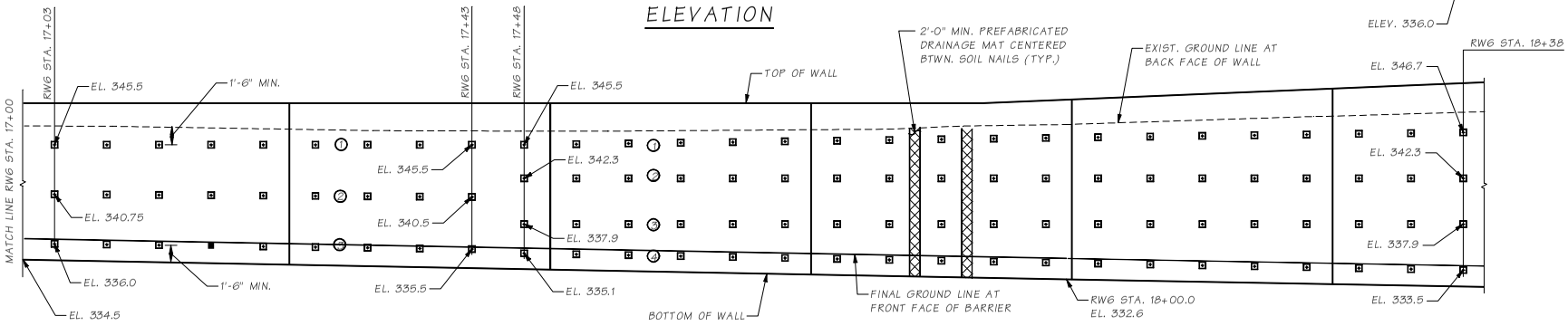

ELEVATION

Bridge Design Engr.	M:\STANDARDS\Walls\SOIL NAIL ELEVATION.MAN									
Supervisor										
Designed By										
Checked By										
Detailed By										
Bridge Projects Engr.										
Prelim. Plan By										
Architect/Specialist	DATE	REVISION		BY	APP'D					

REGION NO.	STATE	FED. AID PROJ. NO.	SHEET NO.	TOTAL SHEETS
10	WASH.			
JOB NUMBER				

Wed May 31 12:17:56 2006

BRIDGE AND STRUCTURES OFFICE

Washington State Department of Transportation

SOIL NAIL LAYOUT

BRIDGE SHEET NO. / SHEET / OF / SHEETS

SR ____ SHEET ____ JOB NO. ____

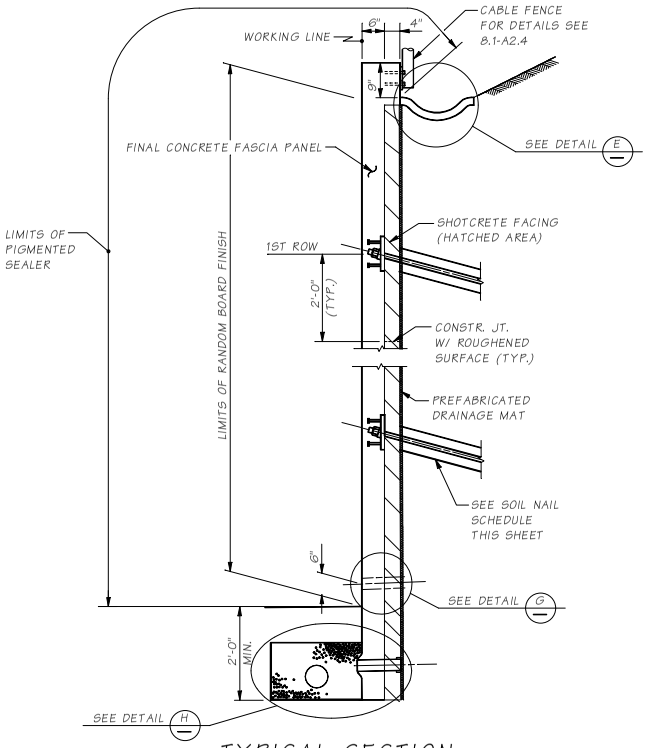

TYPICAL SECTION
SOIL NAIL WALL

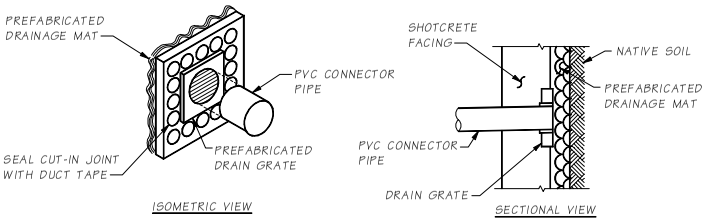

DETAIL G

DRAIN GRATE INSTALLATION SHALL NOT
DISRUPT PREFABRICATED DRAINAGE MAT

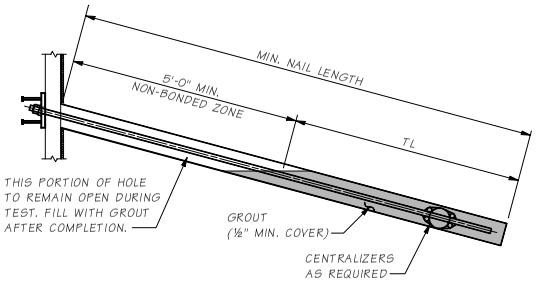

TL = TEST LOAD = (BOND LENGTH) X (DESIGN LOAD TRANSFER)

TEST NAIL DETAIL

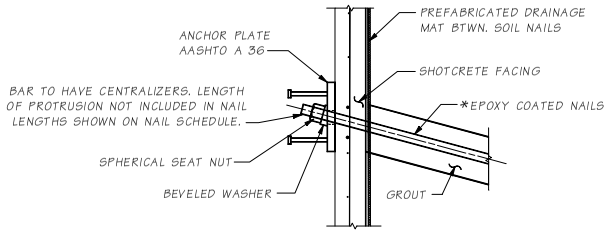

NAIL HEAD DETAIL

*DOUBLE CORROSION PROTECTION REQUIRED FOR SOIL NAILS
AT LOCATIONS SHOWN. SEE SOIL NAIL LAYOUTS FOR DETAILS

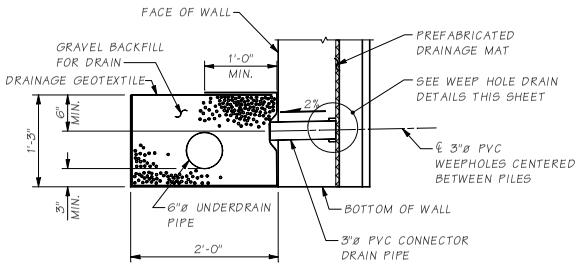

DETAIL H

TYPICAL FABRIC
DRAIN CONNECTION
TO UNDERDRAIN PIPE

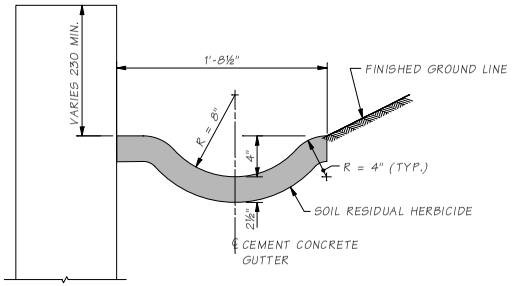

DETAIL E

CEMENT CONCRETE GUTTER

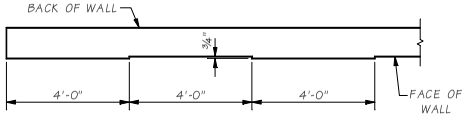

PLAN - WALL FACE FINISH

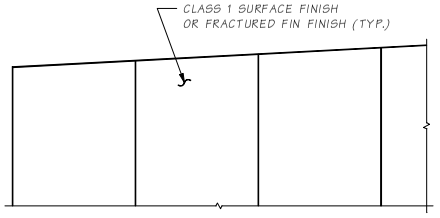

ELEVATION - WALL FACE FINISH

Bridge Design Engr.	M:\STANDARDS\Walls\SOIL NAIL TYP SECT.MAN									
Supervisor										
Designed By										
Checked By										
Detailed By										
Bridge Projects Engr.										
Prelim. Plan By										
Architect/Specialist	DATE	REVISION		BY	APP'D					

REGION NO.	STATE	FED. AID PROJ. NO.	SHEET NO.	TOTAL SHEETS
10	WASH.			
JOB NUMBER				

BRIDGE AND STRUCTURES OFFICE

Washington State Department of Transportation

SOIL NAIL WALL SECTION

BRIDGE SHEET NO.
SHEET
OF
SHEETS

SR ____ JOB NO. ____ SHEET

8.1-A4-2

Wed May 31 13:17:46 2006

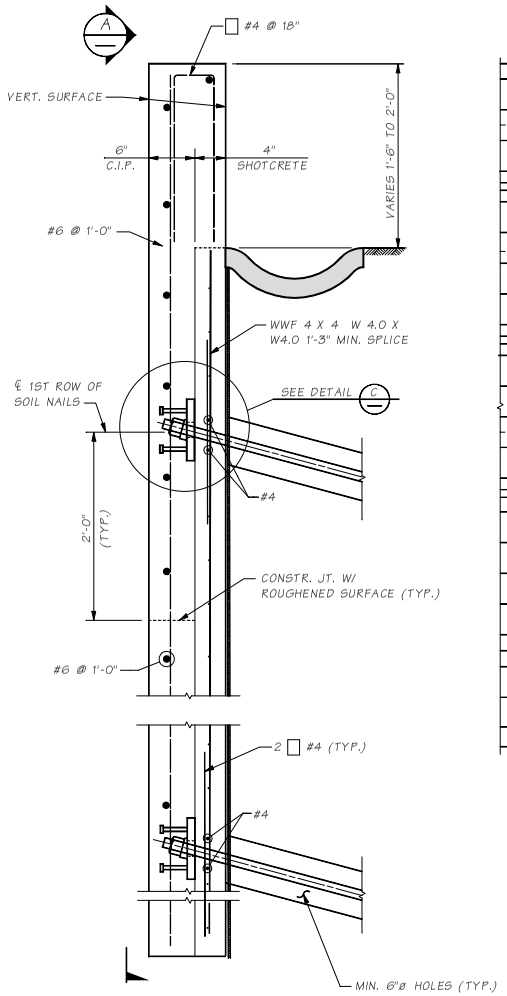

TYPICAL SECTION

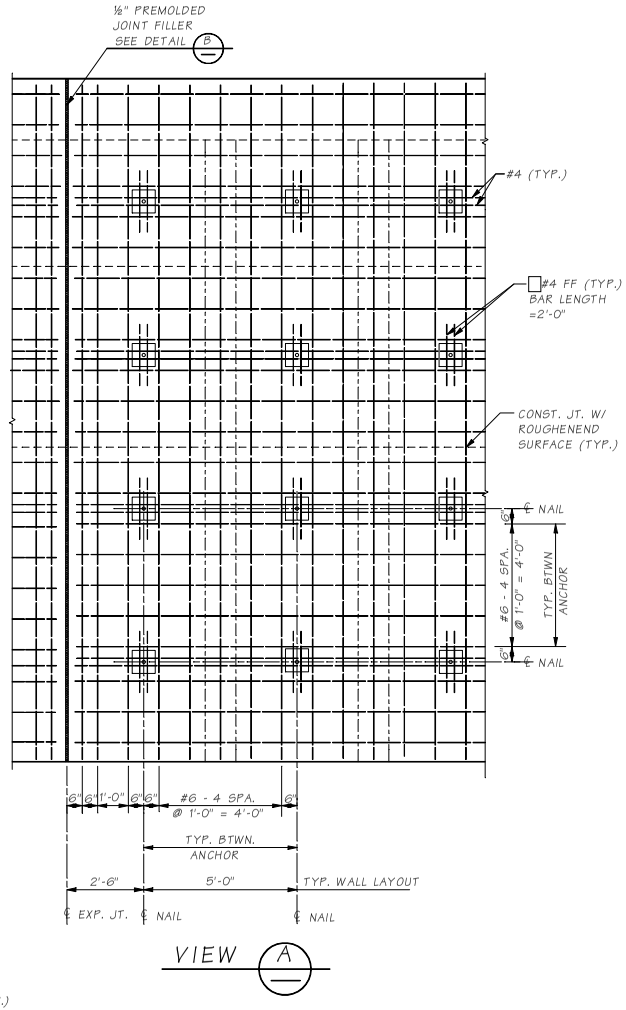

VIEW A

FACIAL WALL REINFORCEMENT

WWF NOT SHOWN FOR CLARITY

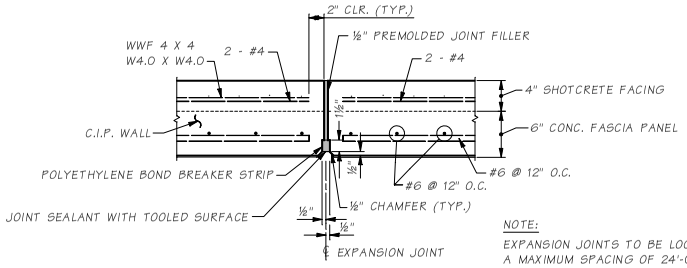

DETAIL B

NOTE:

EXPANSION JOINTS TO BE LOCATED AT A MAXIMUM SPACING OF 24'-0" C. TO C., CENTERED BETWEEN NAILS, EXCEPT IF THE JOINT IS WITHIN 1'-6" OF A STEP AT THE TOP OF WALL, THE JOINT IS TO BE LOCATED AT THAT STEP.

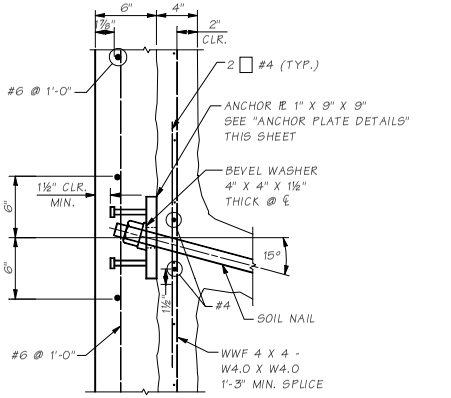

DETAIL C

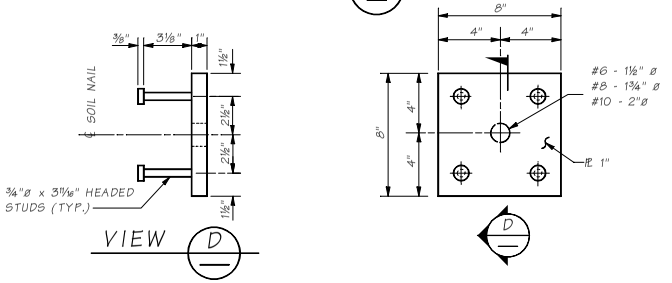

VIEW D

ANCHOR PLATE DETAILS

AASHTO A 36

Bridge Design Engr.	M:\STANDARDS\Walls\SOIL NAIL FASCIA.MAN									
Supervisor						REGION NO.	STATE	FED. AID PROJ. NO.	SHEET NO.	TOTAL SHEETS
Designed By						10	WASH.			
Checked By						JOB NUMBER				
Detailed By										
Bridge Projects Engr.										
Prelim. Plan By										
Architect/Specialist	DATE	REVISION	BY	APP'D						

Wed May 31 15:17:21 2006

BRIDGE AND STRUCTURES OFFICE

Washington State Department of Transportation

SOIL NAIL WALL FASCIA PANEL DETAILS

BRIDGE SHEET NO. SHEET OF SHEETS

SR JOB NO. SHEET

8.1-A4-3

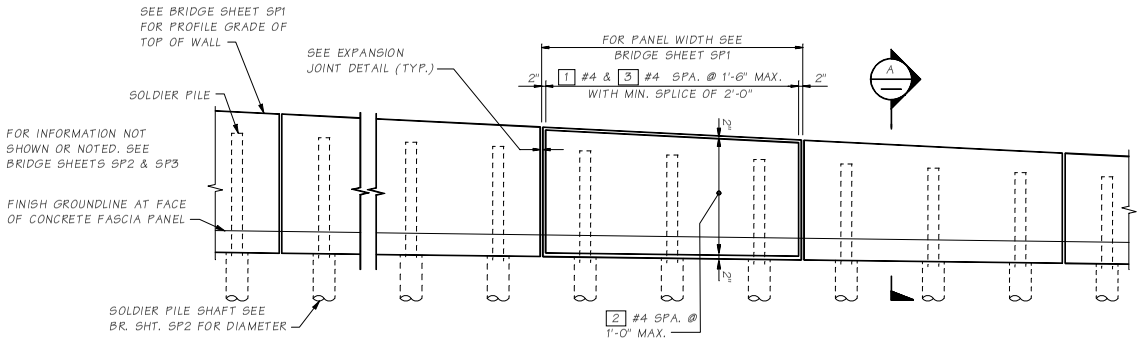

PARTIAL WALL ELEVATION

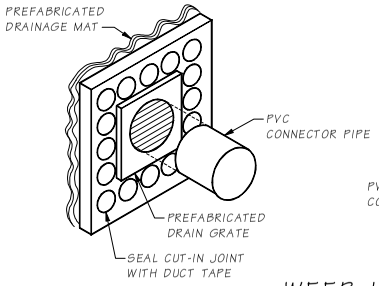

ISOMETRIC VIEW

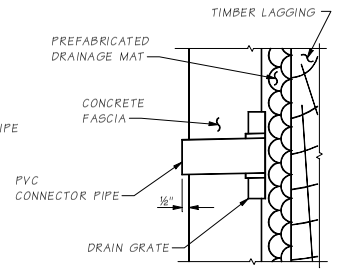

SECTIONAL VIEW

WEEP HOLE DRAIN DETAILS

DRAIN GRATE INSTALLATION SHALL NOT DISRUPT PREFABRICATED DRAINAGE MAT

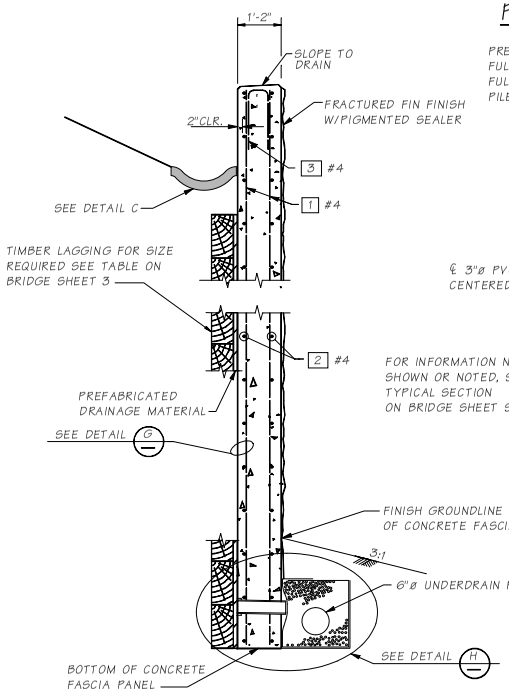

SECTION A

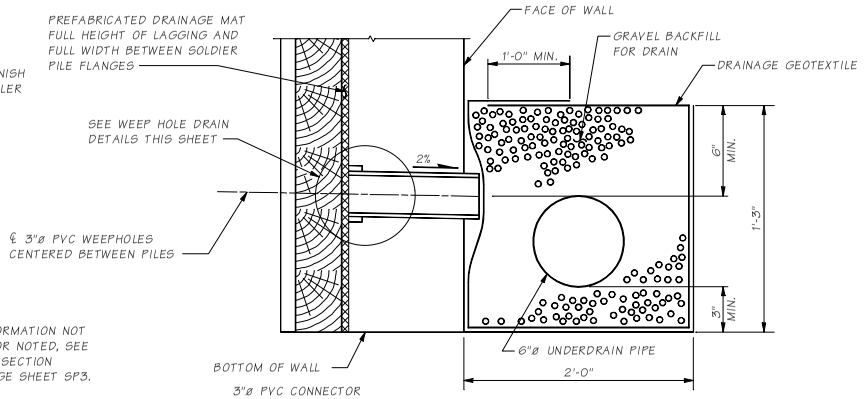

DETAIL H

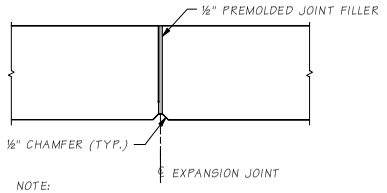

NOTE:
EXPANSION JOINTS SHALL BE LOCATED AS SHOWN ON BRIDGE SHEET SP1.

EXPANSION JOINT DETAIL

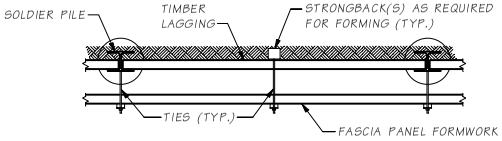

TYPICAL FASCIA PANEL FORMWORK

- SEE SPECIAL PROVISIONS FOR FASCIA PANEL FORMING.
- STRONGBACK(S) AND TIES SPACED AS REQUIRED TO CONTAIN FOUR PRESSURE.

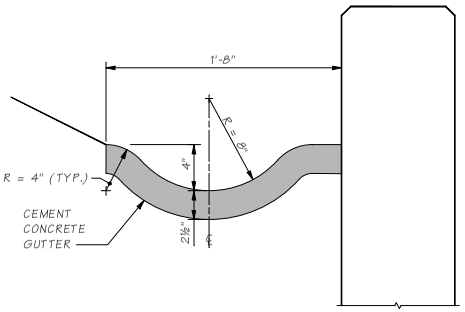

DETAIL C

Bridge Design Engr.	M:\STANDARDS\Walls\SOLDIER TIEBACK FASCIA.MAN				REGION NO.	STATE	FED. AID PROJ. NO.	SHEET NO.	TOTAL SHEETS
Supervisor					10	WASH.			
Designed By					JOB NUMBER				
Checked By									
Detailed By									
Bridge Projects Engr.									
Prelim. Plan By									
Architect/Specialist	DATE	REVISION	BY	APP'D					

Wed May 31 13:18:11 2006

BRIDGE AND STRUCTURES OFFICE

Washington State Department of Transportation

SOLDIER PILE/TIEBACK WALL FASCIA PANEL DETAILS

BRIDGE SHEET NO.
SHEET
OF
SHEETS

SR ____ JOB NO. ____ SHEET ____

8.1-A4-4

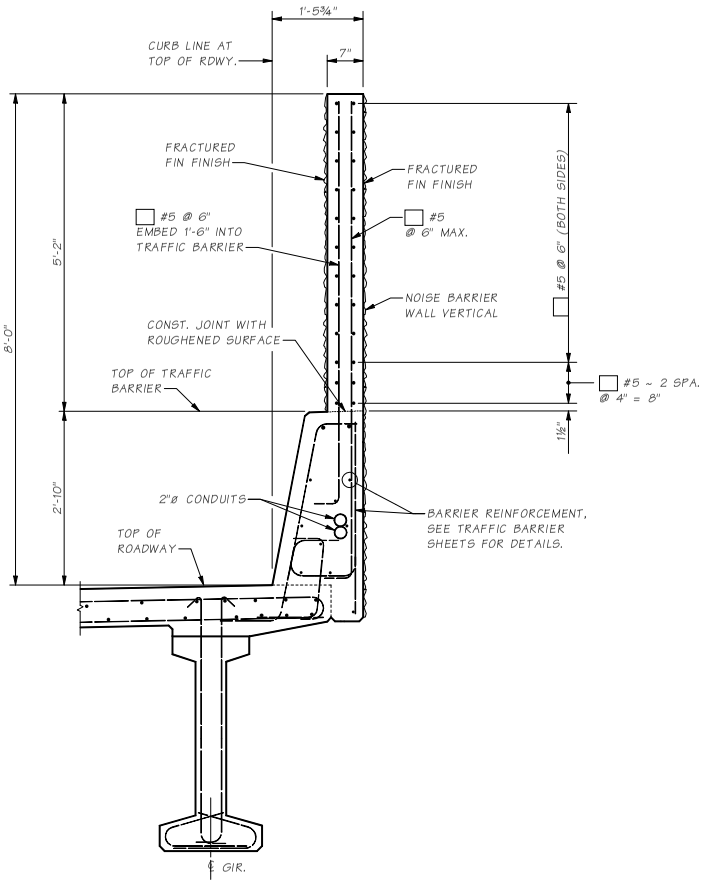

NOISE BARRIER WALL
ON BRIDGE

Bridge Design Engr.	M:\STANDARDS\Walls\NOISE BARRIER ON BRIDGE.MAN										
Supervisor											
Designed By											
Checked By											
Detailed By											
Bridge Projects Engr.											
Prelim. Plan By											
Architect/Specialist	DATE	REVISION		BY	APP'D						

Fri Feb 01 08:01:43 2008

BRIDGE AND STRUCTURES OFFICE

Washington State Department of Transportation

NOISE BARRIER ON BRIDGE

BRIDGE SHEET NO.

SHEET OF SHEETS

SR JOB NO. SHEET

8.1-A5-1

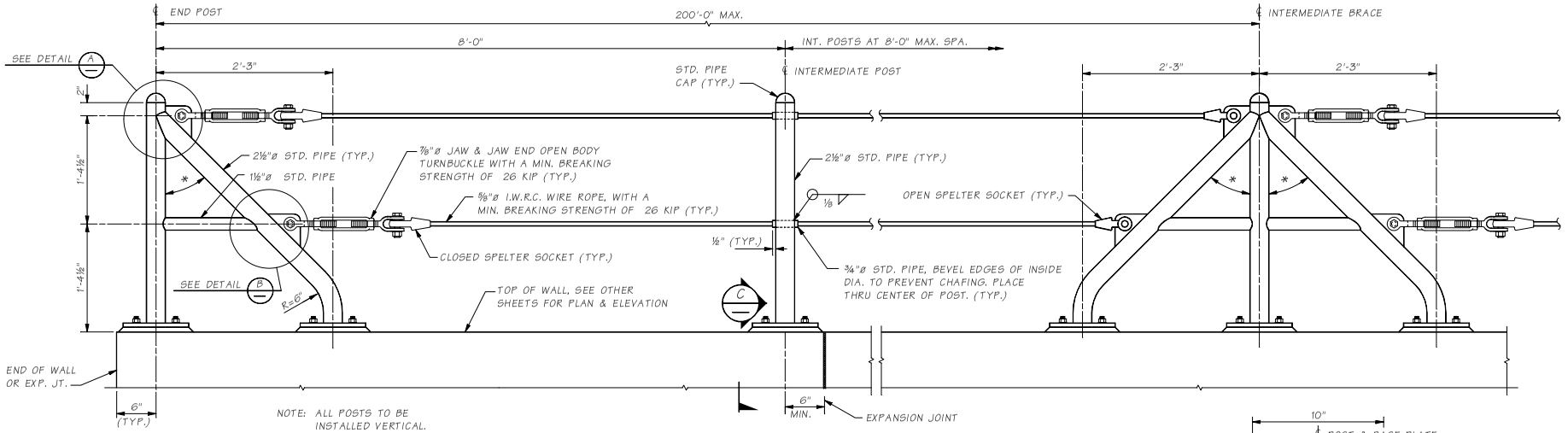

NOTE: ALL POSTS TO BE INSTALLED VERTICAL.

* ANGLES VARY (45° APPROX.) WITH THE SLOPE OF THE TOP OF WALL.

ELEVATION - CABLE RAIL

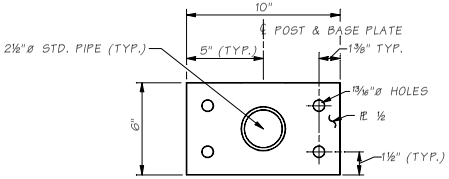

BASE PLATE DETAIL

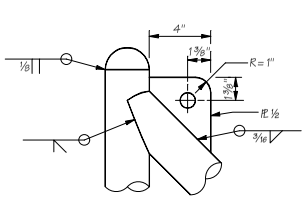

DETAIL A

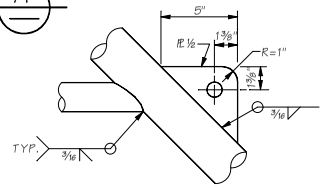

DETAIL B

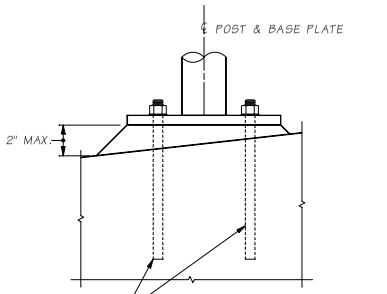

VIEW D

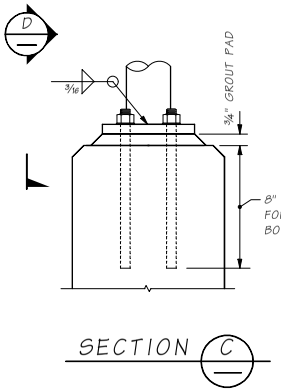

SECTION C

NOTES:

1. ALL PIPE SHALL BE STEEL PIPE ASTM A53 GRADE B.
2. ALL STEEL PLATE SHALL BE ASTM A 36.
3. ALL PARTS EXCEPT WIRE ROPE SHALL BE HOT DIP GALVANIZED IN ACCORDANCE WITH AASHTO M111 OR M232 AFTER FABRICATION.
4. SPELTER SOCKETS AND SOCKETING PROCEDURE SHALL BE AS PER ROPE MANUFACTURER.
5. WIRE ROPE SHALL BE INSTALLED TO 400 LBS TENSION LEAVING A TAKE UP OF 6" STILL AVAILABLE IN THE TURNBUCKLE.
6. EACH CONTINUOUS LENGTH OF CABLE SHALL HAVE A TURNBUCKLE AT ONE END ONLY AND BE ANCHORED TO END POST WITH BRACE AT BOTH ENDS.
7. INTERMEDIATE POSTS AND BRACES SHALL NOT TO BE INSTALLED ACROSS EXPANSION JOINT.
8. ALL POSTS TO BE INSTATLLED PERPENDICULAR TO TOP OF WALL.

Bridge Design Engr.	M:\STANDARDS\Walls\CABLE RAILING TOP MOUNTED BASE.MAN				REGION NO.	STATE	FED. AID PROJ. NO.	SHEET NO.	TOTAL SHEETS
Supervisor					10	WASH.			
Designed By									
Checked By					JOB NUMBER				
Detailed By									
Bridge Projects Engr.									
Prelim Plan By									
Architect/Specialist	DATE	REVISION	BY	APP'D					

BRIDGE AND STRUCTURES OFFICE

Washington State Department of Transportation

CABLE FENCE - TOP MOUNT

BRIDGE SHEET NO.

SHEET OF SHEETS

SR JOB NO. SHEET

8.1-A5-2

Wed May 31 13:14:35 2006

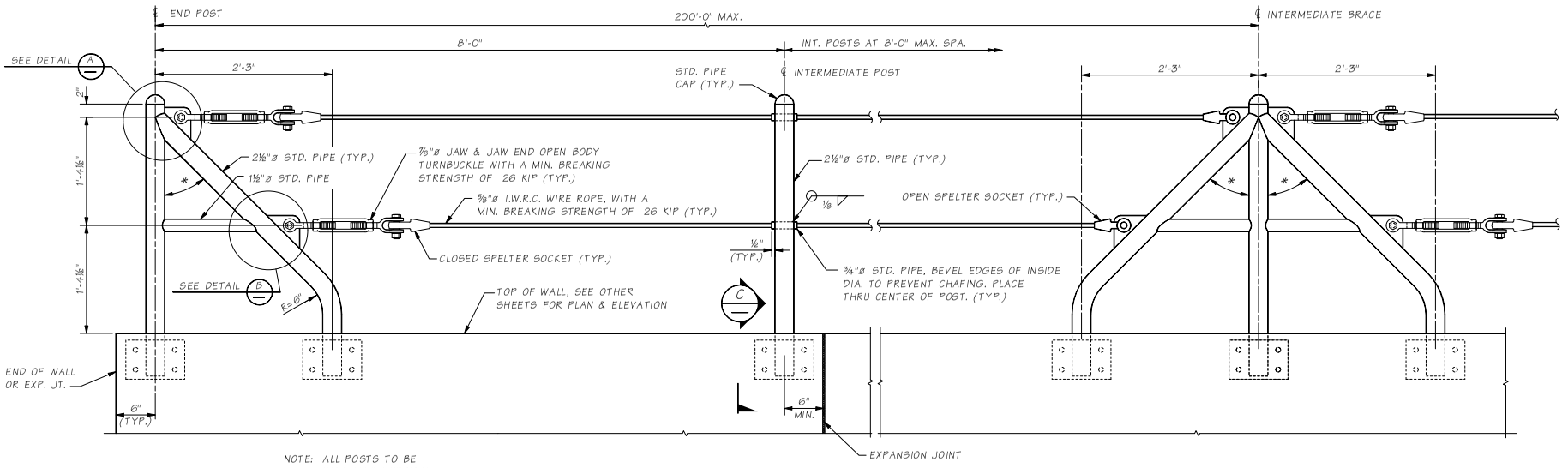

ELEVATION - CABLE RAIL

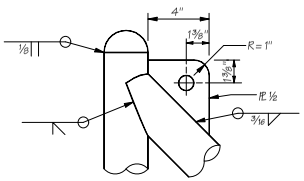

DETAIL A

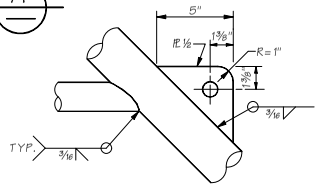

DETAIL B

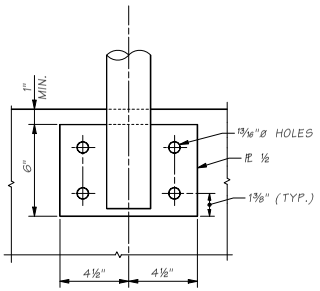

VIEW D

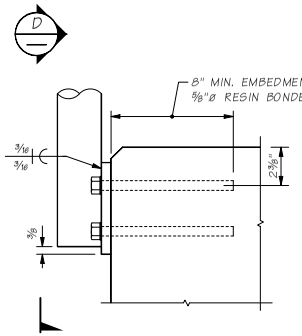

SECTION C

NOTES:

1. ALL PIPE SHALL BE STEEL PIPE ASTM A53 GRADE B.
2. ALL STEEL PLATE SHALL BE ASTM A 36.
3. ALL PARTS EXCEPT WIRE ROPE SHALL BE HOT DIP GALVANIZED IN ACCORDANCE WITH AASHTO M111 OR M232 AFTER FABRICATION.
4. SPELTER SOCKETS AND SOCKETING PROCEDURE SHALL BE AS PER ROPE MANUFACTURER.
5. WIRE ROPE SHALL BE INSTALLED TO 0.4 KIP TENSION LEAVING 6" OF TAKE UP AVAILABLE IN THE TURNBUCKLE.
6. EACH CONTINUOUS LENGTH OF CABLE SHALL HAVE A TURNBUCKLE AT ONE END ONLY AND BE ANCHORED TO END POST WITH BRACE AT BOTH ENDS.
7. CENTER SUPPORT NOT TO BE INSTALLED ACROSS EXPANSION JOINT.
8. ALL POSTS TO BE INSTALLED VERTICAL.

Bridge Design Engr.	M:\STANDARDS\Walls\CABLE RAIL.MAN								
Supervisor					REGION NO.	STATE	FED. AID PROJ. NO.	SHEET NO.	TOTAL SHEETS
Designed By					10	WASH.			
Checked By					JOB NUMBER				
Detailed By									
Bridge Projects Engr.									
Prelim. Plan By									
Architect/Specialist	DATE	REVISION	BY	APPD					

BRIDGE AND STRUCTURES OFFICE

Washington State Department of Transportation

CABLE FENCE - SIDE MOUNT

BRIDGE SHEET NO. / SHEET / OF / SHEETS

SR ____ JOB NO. ____ SHEET

8.1-A6-1

Fri Apr 25 12:23:43 2008

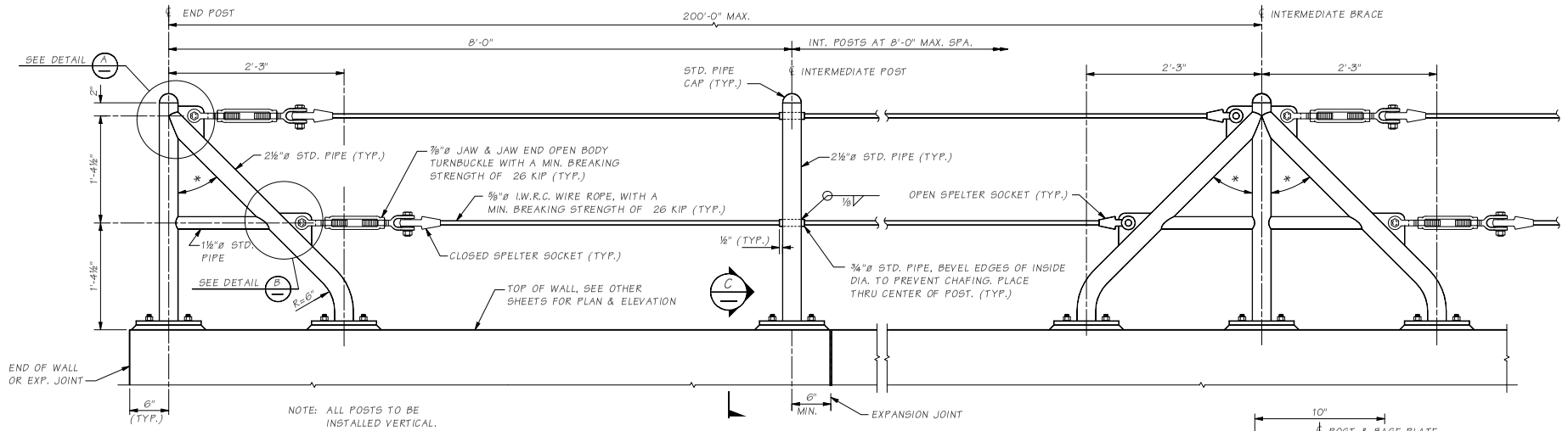

NOTE: ALL POSTS TO BE INSTALLED VERTICAL.

* ANGLES VARY (45° APPROX.) WITH THE SLOPE OF THE TOP OF WALL.

ELEVATION - CABLE RAIL

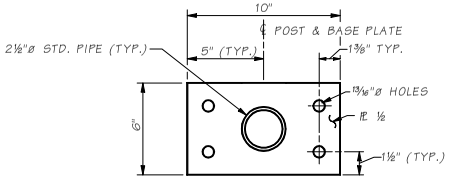

BASE PLATE DETAIL

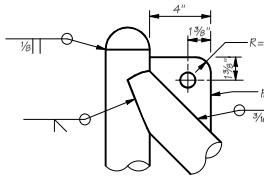

DETAIL A

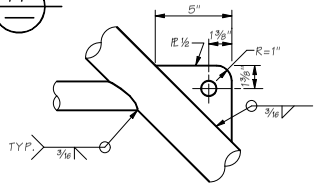

DETAIL B

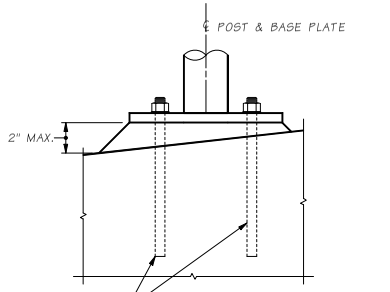

VIEW D

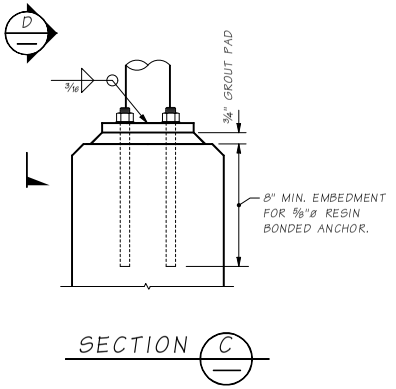

SECTION C

NOTES:

1. ALL PIPE SHALL BE STEEL PIPE ASTM A53 GRADE B.
2. ALL STEEL PLATE SHALL BE ASTM A 36.
3. ALL PARTS EXCEPT WIRE ROPE SHALL BE HOT DIP GALVANIZED IN ACCORDANCE WITH AASHTO M111 OR M232 AFTER FABRICATION.
4. SPELTER SOCKETS AND SOCKETING PROCEDURE SHALL BE AS PER ROPE MANUFACTURER.
5. WIRE ROPE SHALL BE INSTALLED TO 400 LBS TENSION LEAVING A TAKE UP OF 6" STILL AVAILABLE IN THE TURNBUCKLE.
6. EACH CONTINUOUS LENGTH OF CABLE SHALL HAVE A TURNBUCKLE AT ONE END ONLY AND BE ANCHORED TO END POST WITH BRACE AT BOTH ENDS.
7. INTERMEDIATE POSTS AND BRACES SHALL NOT TO BE INSTALLED ACROSS EXPANSION JOINT.
8. ALL POSTS TO BE INSTATLLED PERPENDICULAR TO TOP OF WALL.

Bridge Design Engr.	M:\STANDARDS\Walls\CABLE RAILING TOP MOUNTED BASE.MAN				REGION NO.	STATE	FED. AID PROJ. NO.	SHEET NO.	TOTAL SHEETS	BRIDGE AND STRUCTURES OFFICE
Supervisor					10	WASH.				Washington State Department of Transportation
Designed By					JOB NUMBER					CABLE FENCE - TOP MOUNT
Checked By										
Detailed By										
Bridge Projects Engr.										
Prelim. Plan By										
Architect/Specialist	DATE	REVISION	BY	APPD						

BRIDGE SHEET NO. ____ SHEET ____ OF ____ SHEETS

SR ____ JOB NO. 8.1-A6-2

Fri Apr 25 13:34:39 2008

Chapter 9 Bearings & Expansion Joints Contents

9.1	**Expansion Joints**		9.1-1
	9.1.1	General Considerations	9.1-1
	9.1.2	General Design Criteria	9.1-2
	9.1.3	Small Movement Range Joints	9.1-3
	9.1.4	Medium Movement Range Joints	9.1-9
	9.1.5	Large Movement Range Joints	9.1-12
9.2	**Bearings**		9.2-1
	9.2.1	General Considerations	9.2-1
	9.2.2	Force Considerations	9.2-1
	9.2.3	Movement Considerations	9.2-1
	9.2.4	Detailing Considerations	9.2-2
	9.2.5	Bearing Types	9.2-2
	9.2.6	Miscellaneous Details	9.2-8
	9.2.7	Contract Drawing Representation	9.2-9
	9.2.8	Shop Drawing Review	9.2-9
	9.2.9	Bearing Replacement Considerations	9.2-9

Appendix A

Appendix 9.1-A1-1	Expansion Joint Details Compression Seal	9.1-A1-1
Appendix 9.1-A2-1	Expansion Joint Details Strip Seal	9.1-A2-1
Appendix 9.1-A3-1	Silicone Seal Expansion Joint Details	9.1-A3-1

9.1 Expansion Joints

9.1.1 General Considerations

All bridges must accommodate, in some manner, environmentally and self-imposed phenomena that tend to make structures move in various ways. These movements come from several primary sources: thermal variations, concrete shrinkage, creep effects from prestressing, and elastic post-tensioning shortening. With the exception of elastic post-tensioning shortening, which generally occurs before expansion devices are installed, movements from these primary phenomenon are explicitly calculated for expansion joint selection and design. Other movement-inducing phenomena include live loading (vertical and horizontal braking), wind, seismic events, and foundation settlement. Movements associated with these phenomena are generally either not calculated or not included in total movement calculations for purposes of determining expansion joint movement capacity.

With respect to seismic movements, it is assumed that some expansion joint damage may occur, that this damage is tolerable, and that it will be subsequently repaired. In cases where seismic isolation bearings are used, the expansion joints must accommodate seismic movements in order to allow the isolation bearings to function properly.

Expansion joints must accommodate cyclic and long-term structure movements in such a way as to minimize imposition of secondary stresses in the structure. Expansion joint devices must prevent water, salt, and debris infiltration to substructure elements below. Additionally, an expansion joint device must provide a relatively smooth riding surface over a long service life.

Expansion joint devices are highly susceptible to vehicular impact that results as a consequence of their inherent discontinuity. Additionally, expansion joints have often been relegated a lower level of importance in the eyes of both designers and contractors. As a result, many of the maintenance problems associated with in-service bridges relate to expansion joints.

One solution to potential maintenance problems associated with expansion joints is to use construction procedures that eliminate the joints from the bridge deck. The two most commonly used methods are called *integral* and *semi-integral* construction. These two terms are sometimes collectively referred to as *jointless bridge* construction. In *integral* construction, concrete end diaphragms are cast monolithically with both the bridge deck and supporting pile substructure. In order to minimize secondary stresses induced in the superstructure, steel piles are generally used in their weak axis orientation relative to the direction of bridge movement. In *semi-integral* construction, concrete end diaphragms are cast monothically with the bridge deck. Supporting girders rest on elastomeric bearings within an L-type abutment. Longer *semi-integral* bridges generally have reinforced concrete approach slabs at their ends. Approach slab anchors, in conjunction with a compression seal device, connect the monolithic end diaphragm to the approach slab. Longitudinal movements are accommodated by diaphragm movement relative to the approach slab, but at the same time resisted by soil passive pressure against the end diaphragm.

Obviously, bridges cannot be built incrementally longer without eventually requiring expansion joint devices. The incidence of approach pavement distress problems increases markedly with increased movement that must be accommodated by the end diaphragm pressing against the backfill. Approach pavement distress includes pavement and backfill settlement and broken approach slab anchors.

WSDOT has implemented *jointless bridge design* by using *semi-integral* construction. Office policy for concrete and steel bridge design is as follows:

A. Concrete Bridges: Semi-integral design is used for bridges under 400 feet. Use L-type abutments with expansion joints at the bridge ends where bridge length exceeds 400 feet. In situations where bridge skew angle exceed 30 degrees, consult the *Bearing and Expansion Joint Specialist* and the *Bridge Design Engineer* for recommendations and approval.

B. Steel Bridges: Use L-type abutments with expansion joints at the ends for multiple-span bridges. *Semi-integral* construction may be used in lieu of expansion joints for single span bridges with the approval of the Bridge Design Engineer. In situations where the bridge skew exceeds 30 degrees, consult the *Bearing and Expansion Joint Specialist* and the *Bridge Design Engineer* and the *Bridge Design Engineer* for recommendations and approval.

In all instances, the use of intermediate expansion joints should be avoided wherever possible.

Because the movement restriction imposed by a bearing must be compatible with the movements allowed by the adjacent expansion joint, expansion joints and bearings must be designed interdependently and in conjunction with the anticipated behavior of the overall structure.

A plethora of manufactured devices exists to accommodate a wide range of expansion joint total movements. Expansion joints can be broadly classified into three categories based upon their total movement range as follows:

Small Movement Joints	Total Movement Range < 1¾”
Medium Movement Joints	1¾” < Total Movement Range < 5”
Large Movement Joints	Total Movement Range > 5”

9.1.2 General Design Criteria

As mentioned previously, expansion joints must be sized to accommodate the movements of several primary phenomena imposed upon the bridge following installation of its expansion joint devices. Concrete shrinkage, thermal variation, and long-term creep are the three most common primary sources of movement. Calculation of the movements associated with each of these phenomena must include the effects of superstructure type, tributary length, fixity condition between superstructure and substructure, and pier flexibilities.

A. Shrinkage Effects

Accurate calculation of shrinkage as a function of time requires that average ambient humidity, volume-to-surface ratios, and curing methods be taken in consideration as summarized in LRFD Article 5.4.2.3.3. Because expansion joint devices are generally installed in their respective blockouts at least 30 to 60 days following concrete deck placement, they must accommodate only the shrinkage that occurs from that time onward. For most situations, that shrinkage strain can be assumed to be 0.0002 for normal weight concrete in an unrestrained condition. This value must be corrected for restraint conditions imposed by various superstructure types.

$$\Delta_{\mathbf{shrink}} = \beta \cdot \mu \cdot \mathbf{L}_{\mathbf{trib}}$$

where

L_{trib} = tributary length of the structure subject to shrinkage

β = ultimate shrinkage strain after expansion joint installation; estimated as 0.0002 in lieu of more refined calculations

μ = restraint factor accounting for the restraining effect imposed by superstructure elements installed before the concrete slab is cast

= 0.0 for steel girders, 0.5 for precast prestressed concrete girders, 0.8 for concrete box girders and T-beams, 1.0 for concrete flat slabs

B. Thermal Effects

Bridges are subject to all modes of heat transfer: radiation, convection, and conduction. Each mode affects the thermal gradients generated in a bridge superstructure differently. Climatic influences vary geographically resulting in different seasonal and diurnal average temperature variations. Additionally, different types of construction have different thermal "inertia" properties. For example, a massive concrete box girder bridge will be much slower to respond to an imposed thermal stimulus, particularly a diurnal variation, than would a steel plate girder bridge composed of many relatively thin steel elements.

Variation in the superstructure average temperature produces elongation or shortening. Therefore, thermal movement range is calculated using the maximum and minimum anticipated bridge superstructure average temperatures anticipated during the structure's lifetime. The considerations in the preceding paragraph have led to the following maximum and minimum anticipated bridge superstructure average temperature guidelines for design in Washington State:

Concrete Bridges:	0° F to 100° F
Steel Bridges (Eastern Washington)	-30° F to 120° F
Steel Bridges (Western Washington)	0° F to 120° F

Total thermal movement range is then calculated as:

$\Delta_{\mathbf{temp}} = \alpha \cdot \mathbf{L}_{\mathbf{trib}} \cdot \delta\mathbf{T}$

where

L_{trib} = tributary length of the structure subject to thermal variation

α = coefficient of thermal expansion; 0.000006 in./in./°F for concrete and 0.0000065 in./in./°F for steel

δT bridge superstructure average temperature range as a function of bridge type and location, as stated previously

In accordance with WSDOT Standard Specifications, contract drawings state dimensions at a normal temperature of 64°F unless specifically noted otherwise. Construction and fabrication activities at average temperatures other than 64°F require the contractor or fabricator to adjust lengths of structural elements and concrete forms accordingly.

Some expansion joint devices are installed in pre-formed concrete blockouts some time after the completion of the bridge deck. In this case, the expansion joint device must be cast into its respective blockout with a gap setting corresponding to the ambient superstructure average temperature at the time the blockouts are filled with concrete. In order to accomplish this, expansion device gap settings must be specified on the contract drawings as a function of superstructure ambient average temperature. Generally, these settings are specified for temperatures of 40°F, 64°F, and 80°F.

9.1.3 Small Movement Range Joints

Elastomeric compression seals, poured sealants, asphaltic plugs, pre-formed closed cell foam, epoxy-bonded elastomeric glands, steel sliding plates and bolt-down elastomeric panels have all been used in the past for accommodating small movement ranges. Current policy is to use compression seals and rapid-cure silicone sealants almost exclusively.

A. Compression Seals

Compression seals are continuous manufactured elastomeric sections, typically with extruded internal web systems, installed within an expansion joint gap to effectively seal the joint against water and debris infiltration. Compression seals are held in place by mobilizing friction against adjacent vertical joint faces. Hence, design philosophy requires that they be sized and installed to always be in a state of compression.

Compression seals can be installed against smooth vertical concrete faces or against steel armoring. When installed against concrete, special concrete nosing material having enhanced impact resistance is typically used. Polymer concrete (both generic and proprietary), polyester concrete, and elastomeric concrete have been used with varying degrees of successful performance. Consult the *Bearing and Expansion Joint Specialist* for current policy.

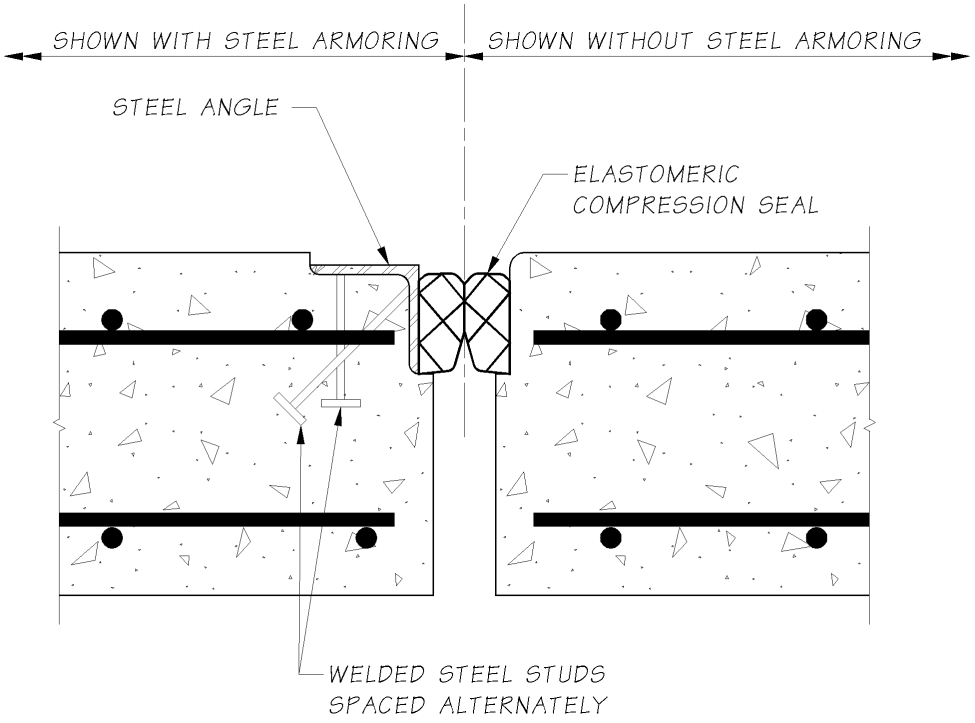

Compression Seal Joint
Figure 9.1.3-1

In design calculations, the minimum and maximum compressed widths of the seal are generally set at 40% and 85% of the uncompressed width. These measurements are perpendicular to the joint axis. It is generally assumed that the compressed seal width at the normal construction temperature of 64°F is 60% of its uncompressed width. For skewed joints, bridge deck movement must be separated into components perpendicular to and parallel to the joint axis. Shear displacement of the compression seal should be limited to a specified percentage of its uncompressed width, usually set at about 22%. Additionally, the expansion gap width should be set so that the compression seal can be replaced over a reasonably wide range of construction temperatures. Manufacturers' catalogues generally specify the minimum expansion gap widths into which specific size compression seals can be installed. The expansion gap width should be specified on the contract drawings as a function of the superstructure average temperature.

Compression seal movement design relationships can be expressed as:

$\Delta_{temp\text{-}normal} = \Delta_{temp} \cdot \cos\theta$ [thermal movement normal to joint]
$\Delta_{temp\text{-}parallel} = \Delta_{temp} \cdot \sin\theta$ [thermal movement parallel to joint]
$\Delta_{shrink\text{-}normal} = \Delta_{shrink} \cdot \cos\theta$ [shrinkage movement normal to joint]
$\Delta_{shrink\text{-}parallel} = \Delta_{shrink} \cdot \sin\theta$ [shrinkage movement parallel to joint]
$W_{min} = W_{install} - [(T_{max}\text{-}T_{install})/(T_{max}\text{-}T_{min})] \cdot \Delta_{temp\text{-}normal} > 0.40 \cdot W$
$W_{max} = W_{install} + [(T_{install}\text{-}T_{min})/(T_{max}\text{-}T_{min})] \cdot \Delta_{temp\text{-}normal} + \Delta_{shrink\text{-}normal} < 0.85 \cdot W$

where θ = skew angle of the expansion joint, measured with respect to a line perpendicular to the bridge longitudinal axis

W = uncompressed width of the compression seal
$W_{install}$ = expansion gap width at installation
$T_{install}$ = superstructure temperature at installation
W_{min} = minimum expansion gap width
W_{max} = maximum expansion gap width
T_{min} = minimum superstructure average temperature
T_{max} = maximum superstructure average temperature

Algebraic manipulation yields:

$$W > (\Delta_{temp\text{-}normal} + \Delta_{shrink\text{-}normal})/0.45$$

$$W > (\Delta_{temp\text{-}parallel} + \Delta_{shrink\text{-}parallel})/0.22$$

Now, assuming $W_{install} = 0.6 \cdot W$,

$$W_{max} = 0.6 \cdot W + [(T_{install} - T_{min})/(T_{max} - T_{min})] \cdot \Delta_{temp\text{-}normal} + \Delta_{shrink\text{-}normal} < 0.85 \cdot W$$

Rearranging yields:

$$W > 4 \cdot [(T_{install} - T_{min})/(T_{max} - T_{min}) \cdot \Delta_{temp\text{-}normal} + \Delta_{shrink\text{-}normal}]$$

Design Example:

Given: A reinforced concrete box girder bridge has a total length of 200'. A compression seal expansion joint at each abutment will accommodate half of the total bridge movement. The abutments and expansion joints are skewed 15°. Bridge superstructure average temperatures are expected to range between 0°F and 100°F.

Find: Required compression seal size and construction gap widths at 40°F, 64°F, and 80°F.

Solution:

Step 1: Calculate temperature and shrinkage movement.

Temperature: $\Delta_{temp} = ½(.000006)(100°F)(200')(12"/') = 0.72"$
Shrinkage: $\Delta_{shrink} = ½(.0002)(0.8)(200')(12"/') = \underline{0.19"}$
Total deck movement at the joint: $= 0.91"$

$$\Delta_{temp\text{-}normal} + \Delta_{shrink\text{-}normal} = (0.91")(\cos 15°) = 0.88"$$

$$\Delta_{temp\text{-}parallel} + \Delta_{shrink\text{-}parallel} = (0.91")(\sin 15°) = 0.24"$$

Step 2: Determine compression seal width required.

W > 0.88”/0.45 = 1.96”

W > 0.24”/0.22 = 1.07”

W > 4[(64°F - 0°F)/(100°F - 0°F) · (0.72”) + 0.19”] (cos 15°) = 2.51”
→Use a 3” compression seal

Step 3: Evaluate construction gap widths for various temperatures for a 3” compression seal.

Construction width at 64°F = 0.6(3”) = 1.80”

Construction width at 40°F = 1.80” + [(64° - 40°)/(100° + 0°)]·(0.72”)·(cos 15°) = 1.97”

Construction width at 80°F = 1.80” – [(80° - 64°)/(100° + 0°)]·(0.72”)·(cos 15°) = 1.69”

Conclusion: Use a 3” compression seal. Construction gap widths for installation at temperatures of 40°F, 64°F, and 80°F are 2”, 1-13/16”, and 1-11/16” respectively.

B. Rapid-Cure Silicone Sealants

Durable low-modulus poured sealants provide watertight expansion joint seals in both new construction and rehabilitation projects. Most silicone sealants possess good elastic performance over a wide range of temperatures while demonstrating high levels of resistance to ultraviolet and ozone degradation. Other desirable properties include self-leveling and self-bonding characteristics.

Rapid-curing silicone sealants are particularly good candidates for rehabilitation in situations where significant traffic disruption consequential to extended traffic lane closure is unacceptable. Additionally, unlike compression seals, rapid-cure silicone sealants do not require straight, parallel substrate surfaces in order to create a watertight seal.

Rapid-cure silicone sealants can be installed against either concrete or steel. It is extremely critical that concrete or steel substrates be thoroughly cleaned before the sealant is installed. Some manufacturers require application of specific primers onto substrate surfaces prior to sealant installation in order to enhance bonding. Consult the *Bearing and Expansion Joint Specialist* for specifics.

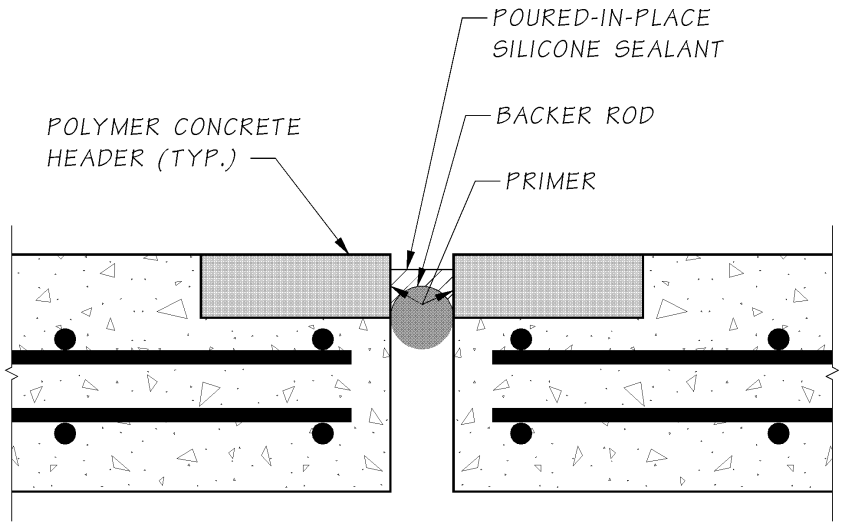

Rapid-cure Silicone Sealants Joint
Figure 9.1.3-2

Rapid-cure silicone sealants should be designed based upon the manufacturer's recommendations. Maximum and minimum working widths of the poured sealant joint are generally recommended as a percentage of the sealant width at installation. Depending upon the manufacturer, these joints can accommodate tensile movements of up to 100% and compressive movements of up to 50% of the sealant width at installation. A minimum recess is typically required between the top of the roadway surface and the top of the sealant surface. This recess is critical in assuring that tires will not contact the top surface of the sealant and initiate its debonding from substrate material.

Design Example:

Given: An existing 25-year old 160' long single span prestressed concrete girder bridge is scheduled for a concrete overlay. The existing compression seals at each non-skewed abutment are in poor condition, although the existing concrete edges on each side of each expansion joint are in relatively good condition. The expansion gaps at these abutments are 1" wide at a normal temperature of 64°F. Assume that each expansion joint will accommodate half of the total bridge movement. Bridge superstructure average temperatures are expected to range between 0°F and 100°F.

Find: Determine the feasibility of reusing the existing 1" expansion gaps for a rapid cure silicone sealant system retrofit. Assume that the sealant will be installed at an average superstructure temperature between 40°F and 80°F. Manufacturer's recommendations state that Sealant "A" can accommodate 100% tension and 50% compression and that Sealant "B" can accommodate 50% tension and 50% compression.

Solution:

Step 1: Calculate future temperature, shrinkage, and creep movements.

Temperature: Δ_{temp} = ½ (.000006)(100°F)(160')(12"/') = 0.58"
Shrinkage: Δ_{shrink} = 0 (Essentially all shrinkage has already occurred.)
Creep: Δ_{creep} = 0 (Essentially all creep has already occurred.)

Step 2: Calculate existing expansion gap widths at average superstructure temperatures of 40°F and 80°F. These are estimated extreme sealant installation temperatures.

G_{40F} = 1.00" + [(64°F-40°F)/(100°F-0°F)]·(.58") = 1.14"
G_{80F} = 1.00" – [(80°F-64°F)/(100°F-0°F)]·(.58") = 0.91"

Step 3: Check sealant capacity if installed at 40°F.

Closing movement = [(100°F – 40°F)/(100°F – 0°F)](.58") = 0.35"
0.35"/1.14" = 0.31 < 0.50 Sealants "A" and "B"
Opening movement = [(40°F – 0°F)/(100°F – 0°F)](.58") = 0.23"
0.23"/1.14" = 0.20 < 1.00 Sealant "A"< 0.50 Sealant "B"

Step 4: Check sealant capacity if installed at 80°F.

Closing movement = = [(100°F – 80°F)/(100°F – 0°F)](.58") = 0.12"
0.12"/0.91" = 0.13 < 0.50 Sealants "A" and "B"
Opening movement = [(80°F – 0°F)/(100°F – 0°F)](.58") = 0.46"
0.46"/0.91" = 0.50 < 1.00 Sealant "A"
= 0.50 Sealant "B"

Conclusion: The existing 1" expansion gap is acceptable for installation of a rapid cure silicone sealant system. Note that Sealant "B" would reach it's design opening limit at 0°F if it were installed at a superstructure average temperature of 80°F. Expansion gap widths at temperatures other than the normal temperature are generally not specified on rapid cure silicone sealant retrofit plans.

C. Asphaltic Plug Joints

Asphaltic plug joints consist of a flexible polymer modified asphalt (PMA) installed in a preformed block out atop a steel plate and backer rod. In theory, asphaltic plug joints provided a seamless smooth riding surface. However, when subjected to high traffic counts, heavy trucks, or substantial acceleration/deceleration traction, the PMS tends to creep, migrating out of the blockouts. As a consequence, we no longer specify the use of asphaltic plug joints.

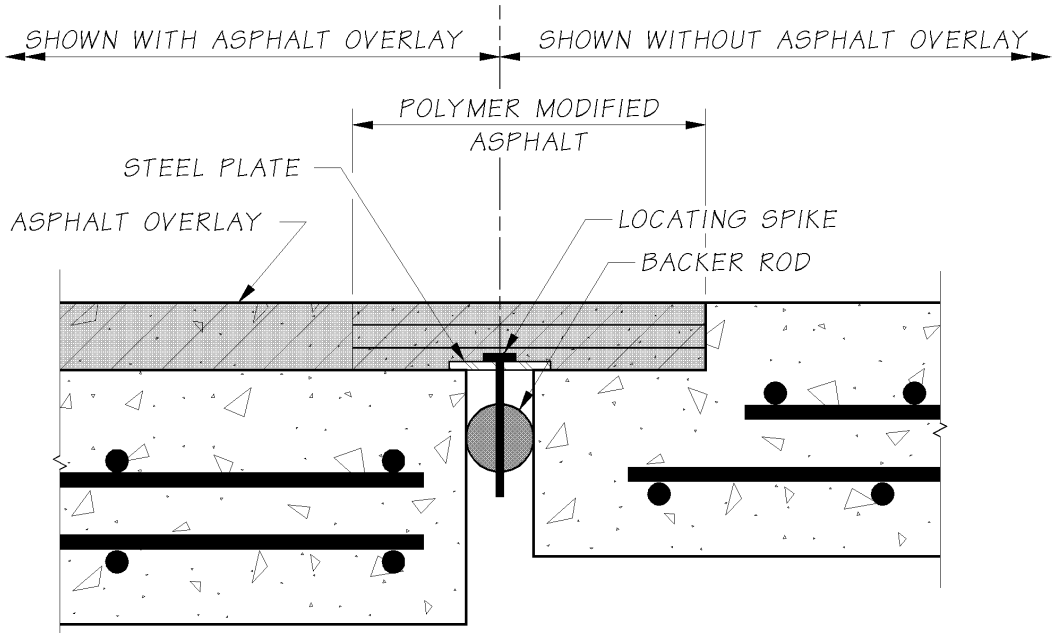

Asphaltic Plug Joint
Figure 9.1.3-3

D. Headers

Headers for expansion joints of newly constructed bridges are conventionally the same Class 4000D structural concrete as used for the bridge deck.

Headers for expansion joints of existing bridges undergoing modification, due to application of overlay or repair to the expansion joint, require a different approach.

Since HMA overlay material cannot provide rigid side support to a compression seal gland or a rapid cure silicone sealant bead, expansion joints in bridges receiving HMA overlay will require modification of the existing joint. This modification generally consists of providing new headers (if no headers are currently present) or repair or modification of existing headers (if headers are currently present) on both sides of each expansion joint. These headers provide rigid side support to the expansion joint material in the modified joint, and provide a transition between the HMA overlay material and the expansion joint itself.

WSDOT specifies use of two materials for expansion joint headers - elastomeric concrete and polyester concrete. Both materials are to be specified in the PS&E, to provide alternatives to the Contractor under contract. Bridge Special Provisions BSP02206.GB6 and BSP023006. GB6 specify the material and construction requirements for polyester concrete. Bridge Special Provisions BSP02207.GB6 and BSP023007.GB6 specify the material and construction requirements for elastomeric concrete.

Modified concrete overlay material can provide rigid side support to a compression seal gland or a rapid cure silicone sealant bead without the need for elastomeric concrete or polyester concrete headers. This alternative approach requires the approval of the Bridge and Structures Office Expansion Joint Specialist. Such MCO headers may utilize WWF as reinforcement (Contract 7108 including Bridge Nos 90/565N&S and 90/566N&S is an example of this approach). Bridge Special Provision BSP02313410.GB6 specifies the construction requirements for this approach, including the requirement for a temporary form to keep the joint open during placement of the MCO.

9.1.4 Medium Movement Range Joints

A. Steel Sliding Plate Joints

Two overlapping steel plates, one attached to the superstructure on each side of the joint, can be used to provide a smooth riding surface across an expansion joint. Unfortunately, steel sliding plates do not generally provide an effective barrier against intrusion of water and deicing chemicals into the joint and onto substructure elements. Consequently, these joints have been supplanted by newer systems, such as strip seals, with improved resistance to water penetration.

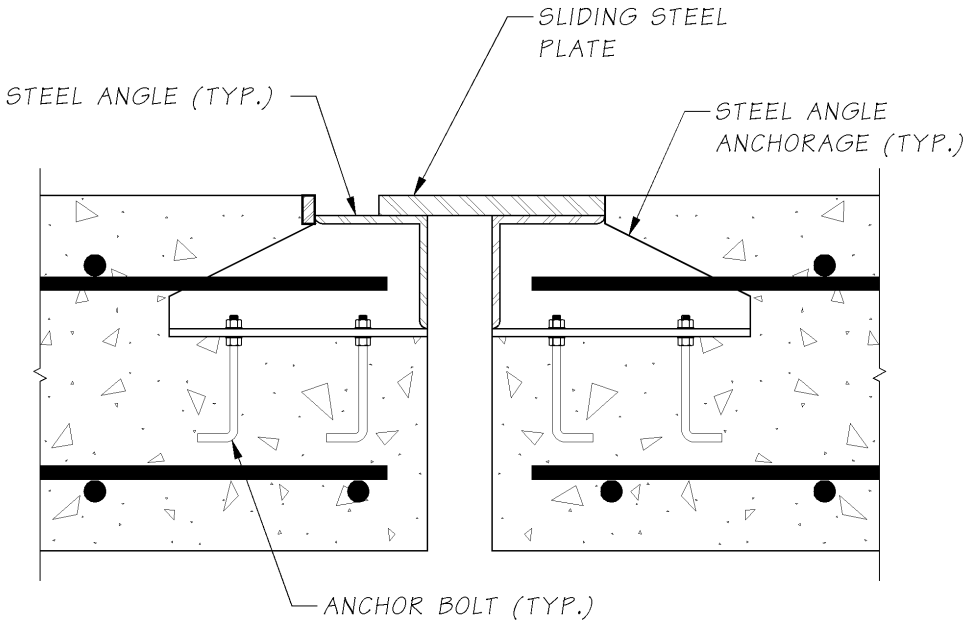

Steel Sliding Plate Joint
Figure 9.1.4-1

Before the advent of more modern systems, steel sliding plates were specified extensively. Their limited use today include the following specific applications: 1) high pedestrian use sidewalks, 2) modular expansion joint upturns at traffic barriers, 3) roadway applications involving unusual movements (translation and large rotations) not readily accommodated by modular expansion joints. In these applications, the sliding plates are generally galvanized or painted to provide corrosion resistance.

Repeated impact and corrosion have deteriorated many existing roadway sliding steel plate systems. In many instances, the anchorages connecting the sliding plate to the concrete deck have broken. When the integrity of the anchorages has been compromised, the steel sliding plates must generally be removed in their entirety and replaced with a newer, watertight system. Where the integrity of the anchorages has not been compromised, sliding plates can often be retrofitted with poured sealants or elastomeric strip seals.

B. Strip Seal Joints

An elastomeric strip seal system consists of a preformed elastomeric gland mechanically locked into metallic edge rails generally embedded into concrete deck on each side of an expansion joint gap. Unfolding of the elastomeric gland accommodates movement. Steel studs are generally welded to the steel extrusions constituting the edge rails to facilitate anchorage to the concrete deck. Damaged or worn glands can be replaced with minimal traffic disruption.

The metal edge rails effectively armor the edges of the expansion joint, obviating the need for a special impact resistant concrete, usually required at compression seal and poured sealant joints. The designer must select either the standard or special anchorage. The special anchorage incorporates steel reinforcement bar loops welded to intermittent steel plates, which in turn are welded to the extrusion. The special anchorage is generally used for very high traffic volumes or in applications subject to snowplow hits. In applications subject to snowplow hits and concomitant damage, the intermittent steel plates can be detailed to protrude slightly above the roadway surface in order to launch the snowplow blade and prevent it from catching on the forward extrusion.

The special anchorage requires a 9” deep blockout, as opposed to 7” deep for the standard anchorage. The standard anchorage is acceptable for high traffic volume expansion joint replacement projects where block out depth limitations exist.

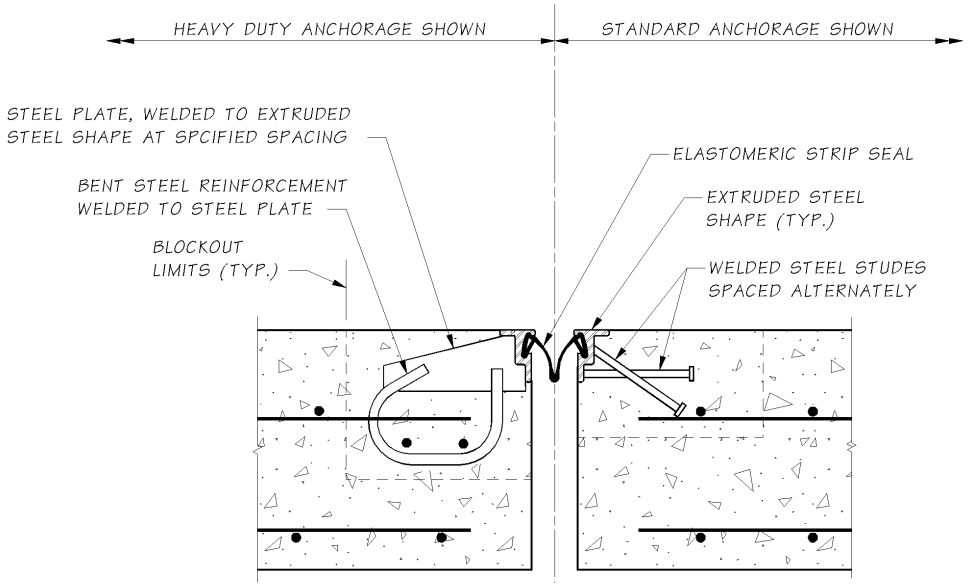

Strip Seal Joint
Figure 9.1.4-2

Design Example:

Given: A steel plate girder bridge has a total length of 600'. It is symmetrical and has a strip seal expansion joint at each end. These expansion joints are skewed 10°. Interior piers provide negligible restraint against longitudinal translation. Bridge superstructure average temperatures are expected to range between –30°F and 120°F during the life of the bridge. Assume a normal installation temperature of 64°F.

Find: Required Type A and Type B strip seal sizes and construction gap widths at 40°F, 64°F, and 80°F. Type A strip seals have a ½" gap at full closure. Type B strip seals are able to fully close, leaving no gap.

Solution:

Step 1: Calculate temperature and shrinkage movement.

Temperature: Δ_{temp} = ½(.0000065)(150°F)(600')(12"/') = 3.51"

Shrinkage: Δ_{shrink} = 0.0 (no shrinkage; μ = 0.0 for steel bridge)

Total deck movement at each joint: = 3.51"

$\Delta_{temp\text{-}normal\text{-}closing}$ = (120°F - 64°F)/(120°F + 30°F)(3.51")(cos 10°)
= 1.29"

$\Delta_{temp\text{-}normal\text{-}opening}$ = (64°F + 30°F)/(120°F + 30°F)(3.51")(cos 10°)
= 2.17"

Step 2: Determine strip seal size required. Assume a minimum construction gap width of 1½" at 64°F.

Type A: Construction gap width of 1½" at 64°F will not accommodate 1.29" closing with a ½" gap at full closure. Therefore, minimum construction gap width at 64°F must be 1.29" + 0.50" = 1.79"

Size required = 1.79" + 2.17" = 3.96" →Use 4" strip seal

Type B: Construction width of 1½" at 64°F is adequate.

Size required = 1.50" + 2.17" = 3.67" →Use 4" strip seal

Step 3: Evaluate construction gap widths for various temperatures for a 4" strip seal.

Type A: Required construction gap width at 64°F = 0.50" + 1.29" = 1.79"

Construction gap width at
40°F = 1.79" + (64°F - 40°F)/(64°F + 30°F)·(2.17") = 2.34"

Construction gap width at
80°F = 1.79" – (80°F – 64°F)/(120°F – 64°F)·(1.29")=1.42"

Type B: Construction gap width of 1½" at 64°F is adequate.

Construction gap width at
40°F = 1.50" + (64°F - 40°F)/(64°F + 30°F)·(2.17") = 2.05"

Construction gap width at
80°F = 1.50" – (80°F – 64°F)/(120°F – 64°F)·(1.29") = 1.13"

Conclusion: Use a 4" strip seal. Construction gap widths for installation at superstructure average temperatures of 40°F, 64°F, and 80°F are 2-5/16", 1-13/16", and 1-7/16" for *Type A* and 2-1/16", 1½", and 1⅛" for *Type B*. (Note that slightly larger gap settings could be specified for the 4" *Type B* strip seal in order to permit the elastomeric glands to be replaced at lower temperatures at the expense of ride smoothness across the joint.)

C. Bolt-down Panel Joints

Bolt-down panel joints, sometimes referred to as expansion dams, are preformed elastomeric panels internally reinforced with steel plates. Bridging across expansion gaps, these panels are bolted into formed block outs in the concrete deck with either adhesive or expansive anchors. Expansion is accompanied by stress and strain across the width of the bolt-down panel between anchor bolts.

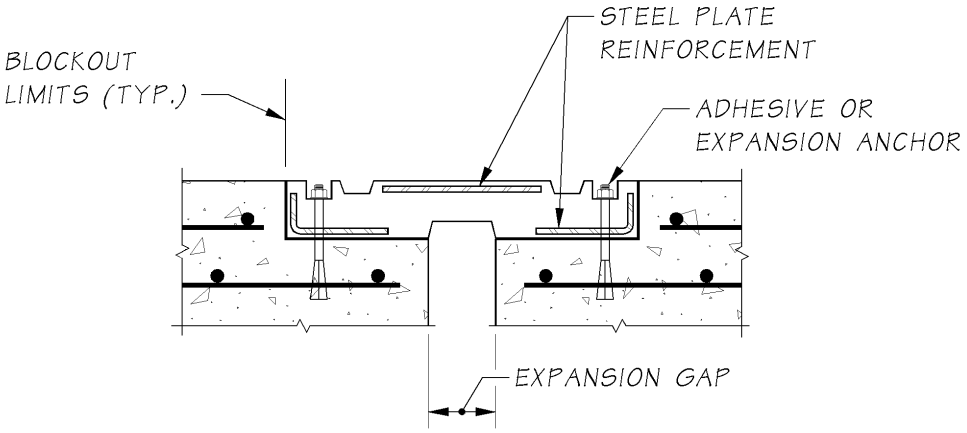

Bolt-down Panel Joint
Figure 9.1.4-3

Unfortunately, the anchorages are prone to loosening and breaking out under high-speed traffic. The resulting loose panels and hardware in the roadway present hazards to vehicular traffic, particularly motorcyclists. As a consequence of the increased liability, we no longer specify bolt-down panel joints. On bridge overlay and expansion joint rehabilitation projects, bolt-down panels are being replaced with rapid-cure silicone sealant joints or strip seal joints. For rehabilitation of bridges having low speed or low volume traffic, existing bolt-down panel joints may be retained and/or selective damaged panels replaced.

9.1.5 Large Movement Range Joints

A Steel Finger Joints

Finger joints have been successfully used to accommodate medium and large movement ranges. They are generally fabricated from steel plate and are installed in cantilever or prop cantilever configurations. The steel fingers must be designed to support traffic loads with sufficient stiffness to preclude excessive vibration. In addition to longitudinal movement, finger joints must also accommodate any rotations or differential vertical deflection across the joint. Finger joints may be fabricated with a slight downward taper toward the ends of the fingers in order to minimize potential for snowplow blade damage. Unfortunately, finger joints do not provide an effective seal against water infiltration. Elastomeric and metal troughs have been installed beneath steel finger joints to catch and redirect runoff water. However, in the absence of routine maintenance, these troughs clog and become ineffective.

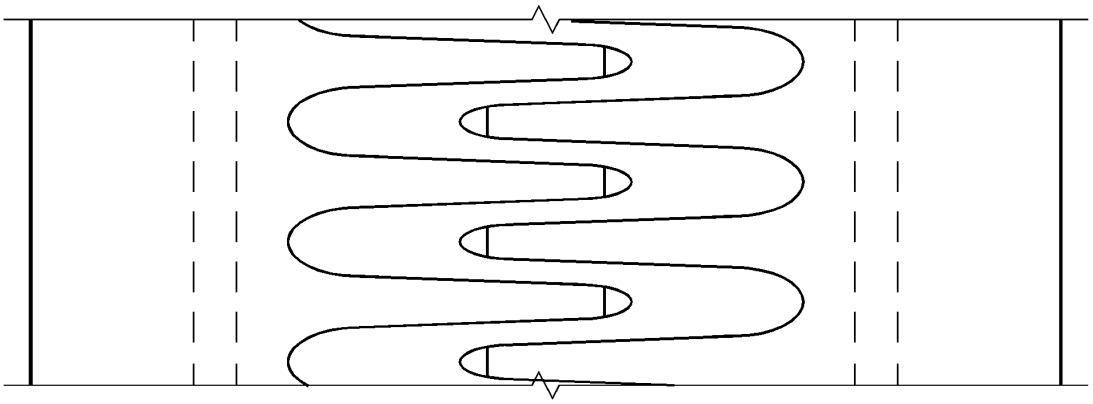

Steel Finger Joint
Figure 9.1.5-1

B. Modular Expansion Joints

Modular expansion joints are complex, expensive structural systems designed to provide watertight wheel load transfer across expansion joint openings. These systems were developed in Europe and introduced into the U.S. in the 1960s. To date, modular joints have been designed and fabricated to accommodate movements of up to 85". In Washington State, the largest modular expansion joints are those on the new Tacoma Narrows Bridge. These joints accommodate 48" of service movement and 60" of seismic movement. Modular joints are generally shipped in a completely assembled configuration to the construction site in segments no longer than 40.'

1. Operational Characteristics

Modular expansion joints comprise a series of steel center beams oriented parallel to the expansion joint axis. Elastomeric strip seals or box-type seals attach to adjacent center beams, preventing infiltration of water and debris. The center beams are supported on support bars, which span in the primary direction of anticipated movement. The support bars are supported on sliding bearings mounted within support boxes. Polytetrafluoroethylene (PTFE) - stainless steel interfaces between elastomeric support bearings and support bars facilitate the unimpeded translation of the support bars as the expansion gap opens and closes. The support boxes rest on either cast-in-place concrete or grout pads installed into a preformed block out.

Modular joints can be classified as either *single support bar* systems or *multiple support bar* systems. In *multiple support bar* systems, a separate support bar supports each center beam. In the more complex *single support bar* system, one support bar supports all center beams at each support location. This design concept requires that each center beam be free to translate along the longitudinal axis of the support bar as the expansion gap varies. This is accomplished by attaching steel yokes to the underside of the center beams. The support bar passes through the openings in the yokes. Elastomeric springs between the underside of each center beam and the top of the support bar and between the bottom of the support bar and bottom of the yoke support each center beam and permit it to translate along the longitudinal axis of the support bar. Practical center beam span lengths limit the use of *multiple support bar* systems for larger movement range modular expansion joints. *Multiple support bar* systems typically become impractical for more than nine seals or for movement ranges exceeding 27". Hence, the *single support bar* concept typifies these larger movement range joints.

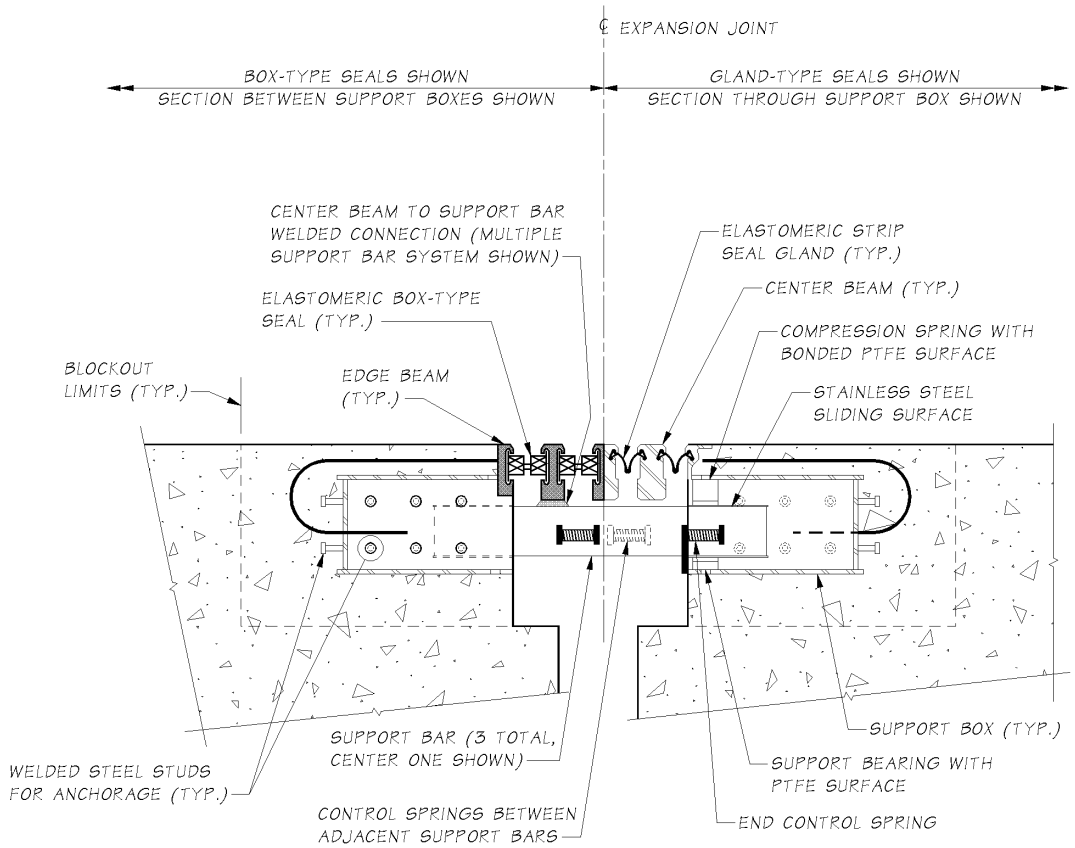

Modular Expansion Joint
Figure 9.1.5-2

The highly repetitive nature of axle loads predisposes modular joint components and connections to fatigue susceptibility, particularly at center beam to support bar connections and center beam field splices. Bolted connections of center beams to support bar have demonstrated poor fatigue endurance. Welded connections are preferred, but must be carefully designed, fatigue tested, fabricated, and inspected to assure satisfactory fatigue resistance. Our current special provision for modular expansion joints includes stringent fatigue based design criteria for modular expansion joints. This special provision also specifies criteria for manufacturing, shipping, storing, and installing modular expansion joints.

Consequential to practical shipping restraints or project staging, modular expansion joints may need to be shipped and/or installed in two or more pieces and subsequently spliced together. Splicing generally occurs after concrete is cast into the block outs. The center beams are the elements that must be connected. These field connections are either welded, bolted, or a hybrid combination of both.

Center beam field splices have historically been the weak link of modular expansion joints because of their high fatigue susceptibility and their tendency to initiate progressive zipper-type failure. Contributing to this susceptibility is the fact that the level of control that can be achieved over a field operation is significantly less than that achievable in a shop. Specific recommendations regarding center beam field splices will be subsequently discussed as they relate to shop drawing review and construction.

2. Movement Design

Calculated total movement range establishes modular expansion joint size. WSDOT policy has been to provide a 15% factor of safety on these calculated service movements. Current systems permit 3" of movement per elastomeric seal element; hence total movement rating provided will be a multiple of 3". To minimize impact and wear on bearing elements, the maximum gap between adjacent center beams should be limited to about 3½".

To facilitate the installation of the modular joints at temperatures other than the 64°F normal temperature, the contract drawings shall specify expansion gap distance face-to-face of edge beams as a function of the superstructure temperature at the time of installation.

Modular expansion joint movement design relationships can be expressed as:

$n = MR / mr$
$G_{min} = (n-1) \cdot w + n \cdot g$
$G_{max} = G_{min} + M7R$

where MR = total movement range of the modular joint

mr = movement range per elastomeric seal
n = number of seals
n – 1 = number of center beams
w = width of each center beam
g = minimum gap per strip seal element at full closure
G_{min} = minimum distance face-to-face of edge beams
G_{max} = maximum distance face-to-face of edge beams

Design Example:

Given: Two cast-in-place post-tensioned concrete box girder bridge frames meet at an intermediate pier where they are free to translate longitudinally. Skew angle is 0° and the bridge superstructure average temperature ranges from 0°F to 120°F. A modular bridge expansion joint will be installed 60 days after post-tensioning operations have been completed. Specified creep is 150% of elastic shortening. Assume that 50% of total shrinkage has already occurred at installation time. The following longitudinal movements were calculated for each of the two frames:

	Frame A	Frame B
Shrinkage	1.18"	0.59"
Elastic Shortening	1.42"	0.79"
Creep (1.5 x Elastic Shortening)	2.13"	1.18"
Temperature Fall (64°F to 0°F)	3.00"	1.50"
Temperature Rise (64°F to 120°F)	2.60"	1.30"

Find: Modular expansion joint size required to accommodate the total calculated movements and the installation gaps measured face-to-face of edge beams at superstructure average temperatures of 40°F, 64°F, and 80°F.

Solution:

Step 1: Determine modular joint size.

Total opening movement (Frame A) = (0.5)·(1.18") + 2.13" + 3.00"
= 5.72"

Total opening movement (Frame B) = (0.5)·(0.59") + 1.18" + 1.50"
= 2.98"

Total opening movement (both frames) = 5.72" + 2.98" = 8.70"

Total closing movement (both frames) = 2.60" + 1.30" = 3.90"

Determine size of the modular joint, including a 15% allowance:

1.15·(8.70" + 3.90") = 14.49" →Use a 15" movement rating joint

Step 2: Evaluate installation gaps measured face-to-face of edge beams at superstructure average temperatures of 40°F, 64°F, and 80°F.

MR = 15" (movement range)
mr = 3" (maximum movement rating per strip seal element)
n = 15"/3" = 5 strip seal elements
n - 1 = 4 center beams
w = 2.50" (center beam top flange width)
g = 0"
G_{min} = 4·(2.50") + 4·(0") = 10"
G_{max} = 10" + 15" = 25"
G_{64F} = G_{min} + Total closing movement from temperature rise
= 10" + 1.15·(3.90") = 14.48" →Use 14½"
G_{40F} = 14.5" + [(64°F-40°F)/(64°F-0°F)]·(3.00" + 1.50") = 16.19"
G_{80F} = 14.5" – [(80°F-64°F)/(120°F-64°F)]·(2.60" + 1.30") = 13.39"

Check spacing between center beams at minimum temperature:

G_{0F} = 14.50" + 8.70" = 23.20"

Spacing = [23.20" – 4(2.50")]/5 = 2.64" < 3½" →OK

Check spacing between center beams at 64°F for seal replacement:

Spacing = [14.50" – 4(2.50")]/5 = 0.90" < 1.50" Therefore, the center beams must be mechanically separated in order to replace strip seal elements.

Conclusion: Use a 15" modular expansion joint. The gaps measured face-to-face of edge beams at installation temperatures of 40°F, 64°F, and 80°F are 16-3/16", 14½" and 13⅜", respectively.

3. Review of Shop Drawings and Structural Design Calculations

The manufacturer's engineer generally performs structural design of modular expansion joints. The project special provisions should require that the manufacturer submit structural calculations, detailed fabrication drawings, and applicable fatigue tests for approval by the Engineer. All structural elements must be designed and detailed for both strength and fatigue. Additionally, modular expansion joints should be detailed to provide access for inspection and periodic maintenance activities, including replacement of seals, control springs, and bearing components.

Our latest special provision for modular expansion joints delineates explicit requirements for their design, fabrication, and installation. This comprehensive special provision builds upon the department's past experience specifying modular expansion joints and incorporates the NCHRP Report 402 *Fatigue Design of Modular Bridge Expansion Joints*. The special provisions include requirements for the shop drawings, calculations, material certifications, general fabrication methods, corrosion protection, shipping and handling, storage, installation, fatigue testing, applicable welding codes and certifications, quality control, and quality assurance. It is strongly advised to carefully review this special provision before reviewing modular expansion joint shop drawings and calculations.

Any structural details, including connections, that do not clearly correspond to specific fatigue categories depicted in the LRFD shall be fatigue tested in accordance with the requirements stipulated in the special provision. Documentation of these tests shall accompany the shop drawing submittal.

As stated in the special provisions, the Contractor shall submit documentation of a quality assurance program distinctly separate from in-house quality control. Quality assurance shall be performed by an independent agency and shall be provided by the manufacturer.

Weld procedures shall be submitted for all shop and field welds. These procedures stipulate welding process employed, end preparation of the component welded, weld metal type, preheat temperature, and welder certifications. As alluded to previously, it is very critical that all welds be made in strict accordance with specifications and under very careful inspection.

Field splices of center beams require particularly careful review. Our special provision recommends several mitigating measures to minimize fatigue susceptibility of center beam field splices. These measures include reducing support box spacing and optimizing fatigue stress range at field splice locations. Keep in mind that the confined nature of the space in which a welder must work can make these welds very difficult to complete. The AWS Welding Code prequalifies certain end geometries because experience has shown that high quality welds can be achieved.

Non-prequalified center beam end geometries require the contractor to submit a Procedure Qualification Record documenting that satisfactory weld quality has been achieved using samples before welding of the actual field piece. The contractor will generally want to avoid the additional expense associated with these tests and will thus specify a prequalified end geometry.

Our special provisions require that adequate concrete consolidation can be achieved underneath all support boxes. The reviewer should ascertain that the shop drawings detail a vertical minimum of 2" between the bottom of each support box and the top of the concrete block out. Alternatively, when vertical clearance is minimal, grout pads can be cast underneath support boxes before casting the concrete within the blockout.

4. Construction Considerations

   Temperature adjustment devices are temporarily welded to the modular expansion joints to permit the Contractor to adjust the modular joint width so that it is consistent with the superstructure temperature at the time concrete is placed in the block out. The temperature devices effectively lock up the modular joint. Once the concrete begins to set up, it is critical to remove these devices as soon as possible. If the modular joint is prevented from opening and closing, it will be subject to very large, potentially damaging, forces.

Prior to placement of concrete into the block out, temporary supports bridging across the expansion gap suspend the modular joint from the bridge deck surface. Following concrete placement, the modular joint is supported by bearing of the support boxes on concrete that has consolidated underneath the blockout. The inspector should assure that adequate concrete consolidation is achieved underneath and around the support boxes.

Following delivery of the modular joint to the jobsite and prior to installation, the inspector should ascertain that center beam end geometries at field weld splice locations match those shown on the approved weld procedure.

9.2 Bearings

9.2.1 General Considerations

Bridge bearings facilitate the transfer of vehicular and other environmentally imposed loads from the superstructure down to the substructure, and ultimately, to the ground. In fulfilling this function, bearings must accommodate anticipated movements (thermal expansion/contraction) while also restraining undesired movements (seismic displacements). Because the movements allowed by an adjacent expansion joint must be compatible with the movement restriction imposed by a bearing, bearings and expansion joints must be designed interdependently and in conjunction with the anticipated behavior of the overall structure.

Numerous types of bearings are used for bridges. These include steel reinforced elastomeric bearings, fabric pad sliding bearings, steel pin bearings, rocker bearings, roller bearings, steel pin bearings, pot bearings, spherical bearings, disk bearings, and seismic isolation bearings. Each of these bearings possess different characteristics vis-à-vis vertical and horizontal load carrying capacity, vertical stiffness, horizontal stiffness, and rotational stiffness. A thorough understanding of these characteristics is essential for economical bearing selection and design. Spherical bearings, disk bearings, and pot bearings are sometimes collectively referred to as high load multi-rotational (HLMR) bearings.

9.2.2 Force Considerations

Bridge bearings must be explicitly designed to transfer all anticipated loads from the superstructure to the substructure. These forces may be directed vertically, longitudinally, or transversely with respect to the global orientation of the bridge. In accordance with LRFD provisions, most bearing design calculations are based upon service limit state stresses. Impact need not be applied to live load forces in the design of bearings.

Experience has empirically led to the following practical load capacity approximations for various bearing types:

Bearing Type	Approx. Load Capacity
Standard Elastomeric (Method A)	Less than 450 kips
High-load Elastomeric (Method B)	Less than 800 kips
Fabric Pad	Less than 600 kips
Steel Pin	More than 600 kips
Spherical and Disk	More than 800 kips
Seismic Isolation	Less than 800 kips

9.2.3 Movement Considerations

Bridge bearings can be detailed to provide translational fixity, to permit free translation in any horizontal direction, or to permit guided translation. The movement restrictions thus imposed by a bearing must be compatible with the movements allowed by an adjacent expansion joint. Additionally, both bearings and expansion joints must be designed consistent with the anticipated load and deformation behavior of the overall structure. Design rotations shall be calculated as follows:

A.) Elastomeric and Fabric Pad Bearings

The maximum service limit state rotation for bearings that do not have the potential to achieve hard contact between metal components shall be taken as the sum of unfactored dead and live load rotations plus an allowance for fabrication and construction uncertainties of 0.005 radians.

B.) HLMR Bearings

The maximum strength limit state load rotation for bearings that are subject to potential hard contact between metal components shall be taken as the sum of all applicable factored load rotations plus an allowance of 0.01 radians for fabrication and installation tolerances and an allowance of 0.01 radians for other uncertainties. Such bearings include spherical, disk, pot, steel pin and some types of seismic isolation bearings.

9.2.4 Detailing Considerations

HLMR bearings shall be designed, detailed, fabricated, and installed to facilitate inspection, maintenance, and eventual replacement. Jacking points shall be identified in the contract drawings so that bearings can be reset, repaired, or replaced. In some instances, bearings may need to be reset in order to mitigate unintended displacements induced by construction sequences.

Prestressed concrete girder bridges having end type "A" (integral end diaphragms) need not be detailed to accommodate elastomeric bearing replacement at abutments. Prestressed concrete girder bridges having end type "B" (L-type abutments) shall be designed and detailed to accommodate elastomeric bearing replacement at abutments. Specifically, girder stops and end diaphragms shall be detailed to accommodate the placement of hydraulic jacks. The standard end diaphragms for long-span girders may not have sufficient flexural and shear capacity to support jacking-induced stresses. The designer shall check these and provide sufficient steel reinforcement to accommodate shear forces and moments induced by jacking. (Girder end types "A" and "B" are depicted on Figures 5.6.2-4 and 5.6.2-5.) Incidentally, intermediate piers of prestressed concrete girder bridges having steel reinforced elastomeric bearings shall also be designed and detailed to facilitate bearing replacement.

9.2.5 Bearing Types

A. Elastomeric Bearings

Elastomeric bearings are perhaps the simplest and most economical of all bridge bearings. They are broadly classified into four types: plain elastomeric pads, fiberglass reinforced elastomeric pads, steel reinforced elastomeric pads, and cotton duck reinforced elastomeric pads. Of these four types, only the latter two are used extensively for bridge construction. Incidentally, cotton duck reinforced elastomeric pads are generally referred to as fabric pad bearings. This subsection will address steel reinforced elastomeric bearings. A subsequent section will address fabric pad bearings.

A steel reinforced elastomeric bearing consists of discrete steel shims vulcanized between adjacent discrete layers of elastomer. The vulcanization process occurs in an autoclave under conditions of high temperature and pressure. The constituent elastomer is either natural rubber or synthetic rubber (neoprene). Steel reinforced elastomeric bearings are commonly used with prestressed concrete girder bridges and may be used with other bridge types. Because of their relative simplicity and minimal fabrication effort, steel reinforced elastomeric bearings offer significant economy relative to HLMR bearings.

Steel reinforced elastomeric bearings rely upon the inherent shear flexibility of the elastomer layers to accommodate bridge movements in any horizontal direction. This shear flexibility also enhances their rotational flexibility. The steel shims limit the tendency for the elastomer layers to bulge laterally.

Standard steel reinforced elastomeric bearings are designed by the Method A procedure delineated in the LRFD provisions. High-load steel reinforced elastomeric bearings are designed by the Method B procedure. The Method B procedure allows 60% higher compressive stress. This higher stress is justified by an additional acceptance test, specifically a long-duration compressive load test. Because of the additional expense associated with the long-duration compression test, the Method B procedure should be used only in cases where the additional vertical load carrying capacity is required.

Both Method A and Method B design procedures require determination of the optimal geometric parameters to achieve an appropriate balance of compressive, shear, and rotational stiffnesses and capacities. Fatigue susceptibility is controlled by limiting live load compressive stress. Delamination (of steel shim-elastomer interface) susceptibility is controlled by limiting total compressive stress. Assuring adequate shim thickness precludes yield and rupture of the steel shims. Excessive shear deformation is controlled and rotational flexibility is assured by providing adequate total elastomer height. Generally, total elastomer thickness shall be no less than twice the maximum anticipated lateral deformation. Overall bearing stability is controlled by limiting total bearing height relative to its plan dimensions. The most important design parameter for reinforced elastomeric bearings is the *shape factor*. The *shape factor* is defined as the plan area of the bearing divided by the area of the perimeter free to bulge (perimeter multiplied by thickness of one layer of elastomer).

In essence, elastomeric bearing design reduces to checking several mathematical equations while varying bearing plan dimensions, number of elastomeric layers and their corresponding thicknesses, and steel shim thicknesses. Because these calculations can become rather tedious, MS Excel spreadsheets have been developed and are available for designs using both Method A and Method B procedures. See the *Bearing and Expansion Joint Specialist* for these design tools.

LRFD design will often result in thicker steel reinforced elastomeric bearings than previous designs, particularly for shorter span bridges. This is consequent partially to the increased rotational flexibility required to accommodate the 0.005 radian allowance for uncertainties and partially to inherent conservatism built into the rotational capacity equations. NCHRP research is currently investigating the latter to determine if code changes are needed, given that elastomeric bearings designed by previous, less stringent criteria have performed quite well.

Elastomeric bearings shall conform to the requirements of AASHTO Specification M 251 *Plain and Laminated Elastomeric Bridge Bearings*. Generally, steel reinforced elastomeric bearings shall be fabricated from 60 durometer elastomer. Shims shall be fabricated from ASTM A 1011 Grade 36 steel unless noted otherwise on the plans. Bearings shall be laminated in ½ inch thick elastomeric layers with a minimum total thickness of 1 inch. For overall bearing heights less than 3 inches, a minimum of ⅛ inch of side clearance shall be provided over the steel shims. For overall heights between 3 inches and 7 inches, a minimum of ¼ inch of side clearance shall be provided. For overall heights greater than 7 inches, a minimum of ½ inch of side clearance shall be provided. Live load compressive deflection shall be limited to 1/16 inch. AASHTO Specification M 251 requires elastomeric bearings to be subjected to a series of tests, including a compression test at 150% of the total service load. For this reason, compressive dead load and live load shall be specified on the plans.

With respect to width, elastomeric bearings shall be designed and detailed as follows:

1. For prestressed concrete wide flange girders (WF42G, WF50G, WF58G, WF74G, and W95G), the edge of the bearing pad shall be set between 1″ minimum and 6″ maximum inside of the edge of the girder bottom flange.
2. For prestressed concrete I-girders, bulb-tee girders, and deck bulb-tee girders, the edge of the bearing pad shall be set 1″ inside of the edge of the girder bottom flange.
3. For all prestressed concrete tub girders, the edge of the bearing shall be set 1″ inside of the edge of the bottom slab. Bearing pads for prestressed concrete tub girders shall be centered close to the centerline of each web.
4. For all prestressed clabs, the edge of the bearing shall be set 1″ inside of the edge of the slab. Two bearing pads and corresponding grout pads are required for each end of the prestressed concrete slabs. The need for steel shims shall be assessed during the bearing design.

As mentioned earlier, LRFD Article 14.4.2.1 requires that a 0.005 radian allowance for uncertainties be included in the design of steel reinforced elastomeric bearings. The Article 14.4.2 Commentary somewhat ambiguously states "An owner may reduce the fabrication and setting tolerance allowances if justified by a suitable quality control plan; therefore, these tolerance limits are stated as recommendations rather than absolute limits." Rotational uncertainties aries from construction tolerances, girder camber uncertainties, and live load variations. The latter two phenomena primarily affect θ_x, not θ_y. Elastomeric bearing failure modes associated with fatigue are primarily related to θ_x. Recognizing these facts, it is acceptable to use 0.002 radians for θ_y. The uncertainty allowance for θ_x should be maintained as 0.005 radians. Consult with the *Bearings and Expansion Joint Specialist* in instances in which this less stringent criteria does not result in a solution.

In order to facilitate compressive load testing, future bearing replacement, and vertical geometry coordination, the following table shall be included in the Plans:

Bearing Design Table	
Service I Limit State	
Dead Load Reaction	--------- KIPS
Live Load Reaction (W/O Impact)	--------- KIPS
Unloaded Height	--------- Inches
Loaded Height (DL)	--------- Inches
Durometer Hardness	---------

In the construction of precast prestressed concrete girder and steel girder bridges, elastomeric bearings are generally not offset to account for temperature during erection of the girders as are most other bearing systems. Girders may be set atop elastomeric bearings at temperatures other than the mean of the temperature range. This is statistically reconciled by assuming a maximum thermal movement in either direction of:

$$\Delta_{temp} = 0.75 \cdot \alpha \cdot L \cdot (T_{MaxDesign} - T_{MinDesign})$$

where $T_{MaxDesign}$ is the maximum anticipated bridge deck average temperature and $T_{MinDesign}$ is the minimum anticipated bridge deck average temperature during the life of the bridge.

For precast prestressed concrete girder bridges, the thermal movement shall be added to shrinkage and long-term creep movements to determine to.tal bearing height required. The shrinkage movement for this bridge type shall be half that calculated for a cast-in-place concrete bridge.

For cast-in-place concrete bridges, it is assumed that the temperature of concrete at the time of casting is equal to the normal temperature, as defined by the *Standard Specifications*. Total shrinkage movement is added to thermal contraction movement to determine required total height of the elastomeric bearing, as noted in Section 9.1.2-A.

B. Fabric Pad Sliding Bearings

Fabric pad sliding bearings incorporate fabric pads with a polytetrafluoroethylene (PTFE) - stainless steel sliding interface to permit large translational movements. Unlike a steel reinforced elastomeric bearing, the fabric pad alone cannot accommodate translational movements. Fabric pads can accommodate very small amounts of rotational movement; less than can be accommodated by more flexible steel reinforced elastomeric bearings. Practical size considerations limit the use of fabric pad bearings to total service load reactions under about 500 kips.

PTFE, also referred to as Teflon, is available in several forms: unfilled sheet, dimpled lubricated, filled, and woven. Filled PTFE contains glass, carbon, or other chemically inert fibers that enhance its resistance to creep (cold flow) and wear. Interweaving high strength fibers through PTFE material creates woven PTFE. Dimpled PTFE contains dimples, which act as reservoirs for silicone grease lubricant.

Friction coefficients for PTFE – stainless steel surfaces vary significantly as a function of PTFE type, contact pressure, and ambient temperature. The AASHTO LRFD provides friction coefficients as a function of these variables. Dimpled lubricated PTFE at high temperatures and high contact pressures typically yield the lowest friction coefficients. Filled PTFE at low temperatures and low contact pressures yield the highest friction coefficients.

In order to minimize frictional resistance, a Number 8 (Mirror) Finish should be specified for all flat stainless steel surfaces in contact with PTFE. The low-friction characteristics of a PTFE – stainless steel interface are actually facilitated by PTFE sliding against PTFE after PTFE particles are absorbed into the asperities of the stainless steel surface.

In fabric pad sliding bearings, the PTFE is generally recessed half its depth into a steel backing plate, which is generally bonded to the top of a fabric pad. The recess provides confinement that minimizes creep (cold flow). The stainless steel sheet is typically seal welded to a steel sole plate attached to the superstructure.

Silicone grease is not recommended for non-dimpled PTFE. Any grease will squeeze out under high pressure and attract potentially detrimental dust and other debris.

1. Fabric Pad Design

Our office design criteria for fabric pad bearings are based upon manufacturers' recommendations, supported by years of satisfactory performance. These criteria differ from AASHTO LRFD provisions in that they recognize significantly more rotational flexibility in the fabric pad. Our maximum allowable service load average bearing pressure for fabric pad bearing design is 1200 psi. Our maximum allowable service load edge bearing pressure for fabric pad bearing design is 2000 psi. A 1200 psi compressive stress corresponds to 10% strain in the fabric pad while a 2000 psi compressive stress corresponds to 14% compressive strain. Based upon this information, the following design relationship can be established:

$$\Theta = \frac{2 \cdot (.14 - .10) \cdot T}{L}$$

$$\Theta = \frac{.08 \cdot T}{L}$$

$$T = 12.5 \cdot \Theta \cdot L$$

where Θ = rotation due to loading plus construction tolerances

L = pad length (parallel to longitudinal axis of beam)

T = fabric pad thickness required

As an example:

Given: DL + LL = 240 kips

Rotation = 0.015 radians

Allowable bearing pad pressure = 1200 psi

f_c' = 3000 psi

Find: fabric pad plan area and thickness required

Solution:

Pad area required = 240,000/1200 = 200 in^2

Try a 20" wide x 10" long fabric pad

T = 12.5(.015)(10") = 1.88"

Solution: Use a 20" x 10" x 1⅞" fabric pad.

2. PTFE – Stainless Steel Sliding Surface Design

   PTFE shall be ⅛" thick and recessed 1/16" into a ½" thick steel plate that is bonded to the top of the fabric pad. With the PTFE confined in this recess, the LRFD code permits an average contact stress of 6000 psi for all loads calculated at the strength limit state and an average contact stress of 4000 psi for permanent loads calculated at the strength limit state. The LRFD code permits slightly higher edge contact stresses.

   For example, suppose:

   DL = 150 kips

   LL = 90 kips

   A_{PTFE} > [(1.25)(150 kips) + (1.75)(90 kips)]/6 ksi = 57.5 in^2

   A_{PTFE} > (1.25)(150 kips)/4 ksi = 46.9 in^2

   Selected area of PTFE must exceed 57.5 in^2

   Stainless steel sheet shall be finished to a Number 8 Finish and seal welded to the sole plate.

C. Pin Bearings

   Steel pin bearings are generally used to support heavy reactions with moderate to high levels of rotation about a single predetermined axis. This situation generally occurs with long straight steel plate girder superstructures.

D. Rocker and Roller Type Bearings

Steel rocker bearings have been used extensively in the past to allow both rotation and longitudinal movement while supporting large loads. Because of their seismic vulnerability and the more extensive use of steel reinforced elastomeric bearings, rocker bearings are no longer specified for new bridges.

Steel roller bearings have also been used extensively in the past. Roller bearings permit both rotation and longitudinal movement. Pintles are generally used to connect the roller bearing to the superstructure above and to the bearing plate below. Nested roller bearings have also been used in the past. Having been supplanted by more economical steel reinforced elastomeric bearings, roller bearings are infrequently used for new bridges today.

E. Spherical Bearings

A spherical bearing relies upon the low-friction characteristics of a curved PTFE - stainless steel interface to provide a high level of rotational flexibility in multiple directions. An additional flat PTFE - stainless steel surface can be incorporated into the bearing to additionally provide either guided or non-guided translational movement capability.

Woven PTFE is generally used on the curved surfaces of spherical bearings. Woven PTFE exhibits enhanced creep (cold flow) resistance and durability characteristics relative to unwoven PTFE. When spherical bearings are detailed to accommodate translational movement, woven PTFE is generally specified on the flat sliding surface also. The LRFD code permits an average contact stress of 6000 psi for all loads calculated at the strength limit state and an average contact stress of 4000 psi for permanent loads calculated at the strength limit state. The LRFD code permits slightly higher edge contact stresses.

Both stainless steel sheet and solid stainless steel have been used for the convex sliding surface of spherical bearings. According to one manufacturer, sheet is generally acceptable for contact surface radii greater than 14” to 18.” For smaller radii, a solid stainless steel convex plate or a stainless steel inlay is used. The inlay is welded to the solid conventional steel. Solid stainless steel can be rather expensive. Consequently, if the total height of the convex plate exceeds about 5”, a stainless steel inlay will likely be used.

Most spherical bearings are fabricated with the concave surface oriented downward to minimize dirt infiltration between PTFE and the stainless steel surface. Finite element modeling of the overall structure must recognize that the center of rotation of the bearing is not coincident with the neutral axis of the girder above.

The contract drawings must show the diameter and height of the spherical bearing in addition to all dead, live, and seismic loadings. Total height depends upon the radius of the curved surface, diameter of the bearing, and total rotational capacity required. Consult the *Bearing and Expansion Joint Specialist* for design calculation examples. Additionally, sole plate connections, base plate, anchor bolts, and any appurtenances for horizontal force transfer must be detailed on the plans. The spherical bearing manufacturer is required to submit shop drawings and detailed structural design calculations of spherical bearing components for review by the Engineer.

F. Disk Bearings

A disk bearing is composed of an annular shaped urethane disk designed to provide moderate levels of rotational flexibility. A steel shear-resisting pin in the center provides resistance against lateral force. A flat PTFE - stainless steel surface can be incorporated into the bearing to also provide translational movement capability, either guided or non-guided.

G. Seismic Isolation Bearings

Seismic isolation bearings mitigate the potential for seismic damage by utilizing two related phenomena: dynamic isolation and energy dissipation. Dynamic isolation allows the superstructure to essentially float, to some degree, while substructure elements below move with the ground during an earthquake. The ability of some bearing materials and elements to deform in certain predictable ways allows them to dissipate earthquake energy that might otherwise damage critical structural elements.

Numerous seismic isolation bearings exist, each relying upon varying combinations of dynamic isolation and energy dissipation. These devices include lead core elastomeric bearings, high damping rubber, friction pendulum, hydraulic dampers, and various hybrid variations.

Effective seismic isolation bearing design requires a thorough understanding of the dynamic characteristics of the overall structure as well as the candidate isolation devices. Isolation devices are differentiated by maximum compressive load capability, lateral stiffness, lateral displacement range, maximum lateral load capability, energy dissipation per cycle, functionality in extreme environments, resistance to aging, fatigue and wear properties, and effects of size.

The Highway Innovative Technology Evaluation Center (HITEC) has developed guidelines for testing seismic isolation and energy dissipating devices. With the goal of disseminating objective information to design professionals, HITEC has tested and published technical reports on numerous proprietary devices. These tests include performance benchmarks, compressive load dependent characterization, frequency dependent characterization, fatigue and wear, environmental aging, dynamic performance at extreme temperatures, durability, and ultimate performance.

For further guidance, see Section 4.6.8 Base Isolation and Energy Disspation Devices.

9.2.6 Miscellaneous Details

A. Temporary Support before Grouting Masonry Plate

The masonry plate of a HLMR bearing is generally supported on a grout pad that is installed after the bearing and superstructure girders above have been erected. This procedure allows the contractor to level and slightly adjust the horizontal location of the bearing before effectively "locking" it in place by casting the grout pad. Several methods have been developed to temporarily support the masonry plate until the grout is placed. The two most commonly used methods will be discussed here.

1. Shim Packs

   Multiple stacks of steel shim plates can be placed atop the concrete surface to temporarily support the weight of the girders on their bearings before grouting. Engineering judgment must be used in selecting the number and plan size of the shims taking grout flowability and shim height adjustability into consideration.

2. Two-step Grouting with Cast Sleeves

   A two-step grouting procedure with cast-in-place voided cores can be used for smaller HLMRs not generally subjected to uplift. Steel studs are welded to the underside of the masonry plate to coincide with the voided cores. With temporary shims installed between the top of the concrete surface and the underside of the masonry plate, the voided cores are fully grouted. Once the first stage grout has attained strength, the shims are removed, the masonry plate is dammed, and grout is installed between the top of the concrete surface and the underside of the masonry plate.

B. Anchor Bolts

Anchor bolts shall be designed to resist all horizontal shear forces and direct tension force due to uplift.

Anchor bolts shall be ASTM A 449 where strengths equal to ASTM A 325 are required and ASTM A 354, Grade BD, where strengths equal to ASTM A 490 are required. ASTM F 1554 bolts with supplemental Charpy test requirements shall be specified in applications in which the bolts are subject to seismic loading.

9.2.7 Contract Drawing Representation

High load multi-rotational bearings are generally depicted schematically in the contract drawings. Each bearing manufacturer has unique fabricating methods and procedures that allow it to fabricate a bearing most economically. Depicting the bearings schematically with loads and geometric requirements provides each manufacturer the flexibility to innovatively achieve optimal economy.

9.2.8 Shop Drawing Review

The manufacturer designs and develops shop drawings for high load multi-rotational bearings. The engineer is responsible for checking and approving the calculations and shop drawings. Calculations shall verify the structural adequacy of all components of the bearing. Each bearing shall be detailed to permit inspection and replacement of components.

9.2.9 Bearing Replacement Considerations

In some situations, existing bearings, or elements thereof, must be replaced consequent to excessive wear or seismic rehabilitation. Bearing replacement operations generally require lifting of superstructure elements using hydraulic jacks. The designer is responsible for calculating anticipated lifting loads and stipulating these loads on the contract drawings. Limitations on lift height shall also be specified. Consideration shall be given to lift height as it relates to adjacent expansion joints elements and adjoining sections of railing. Stresses induced as a consequence of differential lift height between multiple hydraulic jacks are generally addressed by stipulating restrictions in the plans or special provisions.

Past experience shows that actual lifting loads nearly always exceed calculated lifting loads. Many factors may contribute to this phenomenon, including friction in the hydraulic jack system and underestimation of superstructure dead loads. Unless the *Bearing and Expansion Joint Specialist* or the *Bridge Design Engineer* approves a variance, contract documents shall require that all hydraulic jacks be sized for 200% of the calculated lifting load. In all cases, the designer shall verify from manufacturer's literature that appropriate hydraulic jacks are available to operate within the space limitations imposed by a particular design situation.

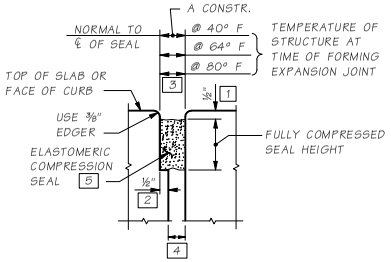

COMPRESSION SEAL

CONCRETE OPENING

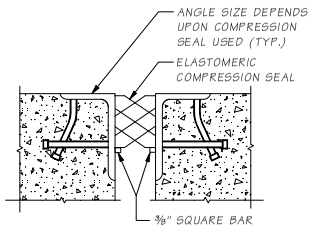

COMPRESSION SEAL

ARMORED OPENING.
USE IN BRIDGE WIDENINGS WITH EXISTING ARMORED JOINTS

COMPRESSION SEAL TABLE

D.S. BROWN		WATSON BOWMAN ACME	
SEAL	WIDTH	SEAL	WIDTH
CV-20	2"	WA-200	2"
CV-2502	2½"	WA-250	2½"
CV-30	3"	WA-300	3"
CV-35	3½"	WA-350	3½"
CV-40	4"	WA-400	4"

TESTING SHALL BE PER AASHTO M-220 PRIOR TO USE.

NOTE:
COMPRESSION SEALS GREATER THAN FOUR INCHES WIDE SHOULD NOT BE USED

1 USE ½" FOR ALL SEALS.

2 USE ½" FOR ALL SEALS.

3 COMPUTE "A CONSTR." PER EQUATION (12) @ 40°F, 64°F, AND 80°F

4 TO BE CHECKED BY THE DESIGNER. SHALL BE LARGE ENOUGH TO PREVENT CLOSURE UNDER THERMAL MOVEMENTS.

5 SEE BDM SECTION 9.1.3A AND DESIGN EXAMPLE FOR COMPRESSION SEAL DESIGN AND SEE "COMPRESSION SEAL TABLE" ON THIS SHEET.

NOTE:
DESIGNER TO USE APPROPRIATE DETAILS FROM THIS SHEET AND CONSULT WITH EXPANSION JOINT SPECIALIST FOR LATEST PLAN SHEET LAYOUT, NOTES, AND UP-TO-DATE DETAILS.

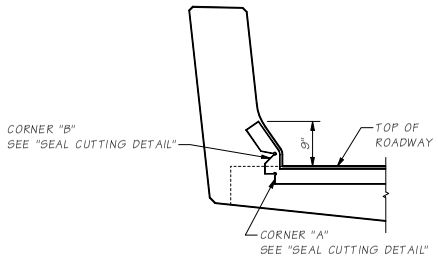

SECTION A

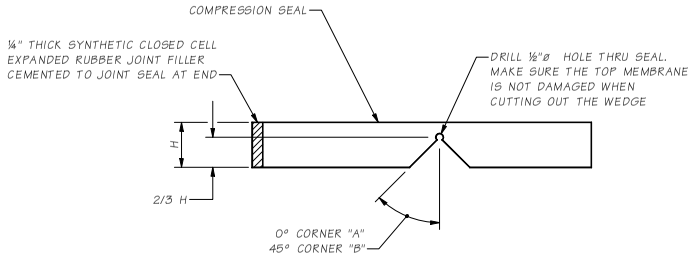

SEAL CUTTING DETAIL

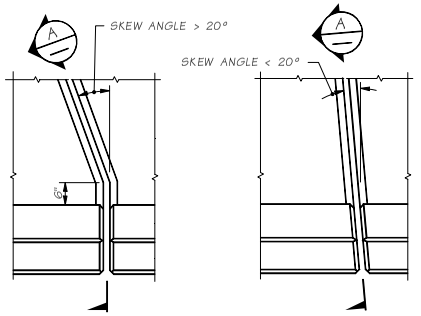

PLAN EXPANSION JOINT

Bridge Design Engr.	M:\STANDARDS\Expansion Joints\COMPRESSION SEAL DET.man				REGION NO.	STATE	FED. AID PROJ. NO.	SHEET NO.	TOTAL SHEETS
Supervisor					10	WASH.			
Designed By					JOB NUMBER				
Checked By									
Detailed By									
Bridge Projects Engr.									
Prelim. Plan By									
Architect/Specialist	DATE	REVISION	BY	APPD					

Wed Feb 06 08:04:58 PST 2008

BRIDGE AND STRUCTURES OFFICE

Washington State Department of Transportation

EXPANSION JOINTS

EXPANSION JOINT DETAILS
COMPRESSION SEAL

BRIDGE SHEET NO.
SHEET
OF
SHEETS

JOB NO. ____ SHEET ____
SR ____

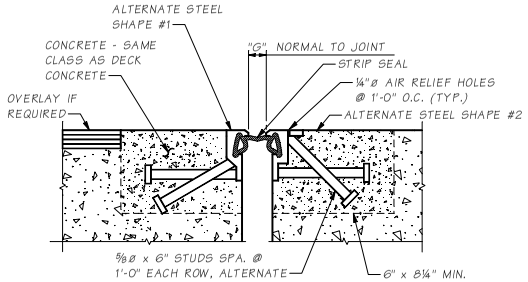

STRIP SEAL

STANDARD ANCHORAGE
USE FOR NORMAL TRAFFIC VOLUME
EXTEND SLAB STEEL INTO THE BLOCKOUT

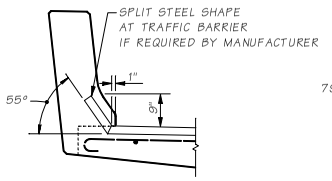

SECTION A — A
FOR STRIP SEAL "F" SHAPE BARRIER

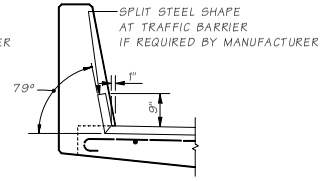

SECTION A — A
FOR STRIP SEAL SINGLE SLOPE BARRIER

NOTE:
DESIGNER TO USE APPROPRIATE DETAILS FROM THIS SHEET AND CONSULT WITH EXPANSION JOINT SPECIALIST FOR LATEST PLAN SHEET LAYOUT, NOTES, AND UP-TO-DATE DETAILS.

STRIP SEAL NOTES:

1. DESIGNER SHALL INCLUDE APPROPRIATE DETAILS AND TABLES IN THE PLANS.
2. SEE BDM SECTION 9.1.4B AND DESIGN EXAMPLE FOR STRIP SEAL DESIGN AND FOR DETERMINING OPENING "G" NORMAL TO THE JOINT. FILL IN AMOUNTS CALCULATED AND STEEL SHAPES SELECTED.
3. FOR SKEW ANGLE GREATER THAN 30° SEE JOINT SPECIALIST.
4. SEE JOINT SPECIALIST PRIOR TO SPECIFYING A 5" MOTION RANGE STRIP SEAL.
5. A GROUP 1 PERMITS A ⅜" GAP BETWEEN STEEL SUPPORTING ELEMENTS AT FULL CLOSURE AND A GROUP 2 STRIP SEAL PERMITS FULL CLOSURE.
6. DO NOT USE STEEL SHAPES WITH HORIZONTAL LEGS IN CURB OR BARRIER REGION.

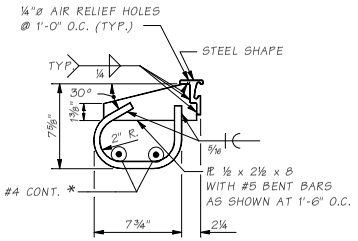

STRIP SEAL

SPECIAL ANCHORAGE
USE FOR HIGH TRAFFIC VOLUME
REQUIRES 9" x 1'-0" MIN. BLOCKOUT
EXTEND SLAB STEEL INTO THE BLOCKOUT
EXTEND BLOCKOUT TO EDGE OF DECK

* PLACED AFTER EXPANSION JOINT IS IN POSITION. THREAD INTO PLACE FROM THE ENDS.

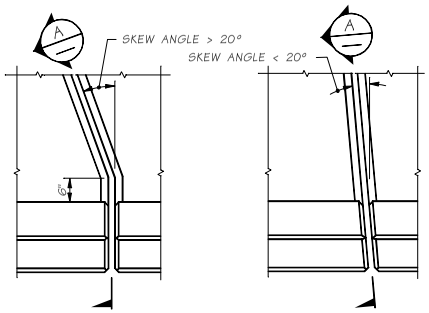

PLAN ~ EXPANSION JOINT

STEEL SHAPE TYPES

MANUFACTURER	ITEM NAME	S / T			V / W			X / Y		
		TYPE	S	T	TYPE	V	W	TYPE	X	Y
D. S. BROWN	DSB STRIP SEAL	SSCM2	1¼"	8"	SSA2, *	1¼"	2"	SSE2, *	1"	1½"
WATSON BOWMAN ACME	WABO STRIP SEAL	M, R, F	2¾"	3¼"	A	1¼"	2"	E	1½"	1½"
R.J. WATSON, INC.	RJ STRIP SEAL	RJM	2¾"	3¼"	RJA	1¼"	2"	RJE	1¼"	1½"
HEXCEL FYFE CO.	STRIP J200-C	C	2½"	3"	A	1¼"	2"	E	1⅜"	1½"

* TRIM OUTSTANDING LEGS OF SSCM2 SHAPE FOR USE IN TRAFFIC BARRIER

2" MOTION RANGE

** GROUP	MANUFACTURER	ITEM NAME	OPENING "G" NORMAL TO JT. MIN.	OPENING "G" NORMAL TO JT. MAX.	MIN. INSTALLATION WIDTH NORMAL TO JOINT	OPENING "G" NORMAL TO JOINT @40°F	@64°F	@80°F
1	D. S. BROWN	DSB STRIP SEAL A2R-400	½"	4½"	1½"			
2	WATSON BOWMAN ACME	WABO STRIP SEAL SE-300	0"	3"	1½"			
2	R.J. WATSON, INC.	R.J. STRIP SEAL 200	0"	2"	1½"			
1	HEXCEL FYFE CO.	STRIP J200-C ES500	¼"	5½"	1½"			

3" MOTION RANGE

** GROUP	MANUFACTURER	ITEM NAME	OPENING "G" NORMAL TO JT. MIN.	OPENING "G" NORMAL TO JT. MAX.	MIN. INSTALLATION WIDTH NORMAL TO JOINT	OPENING "G" NORMAL TO JOINT @40°F	@64°F	@80°F
1	D. S. BROWN	DSB STRIP SEAL A2R-400	½"	4½"	1½"			
2	WATSON BOWMAN ACME	WABO STRIP SEAL SE-300	0"	3"	1½"			
2	R.J. WATSON, INC.	R.J. STRIP SEAL 300	0"	3"	1½"			
1	HEXCEL FYFE CO.	STRIP J200-C ES500	¼"	5½"	1½"			

4" MOTION RANGE

** GROUP	MANUFACTURER	ITEM NAME	OPENING "G" NORMAL TO JT. MIN.	OPENING "G" NORMAL TO JT. MAX.	MIN. INSTALLATION WIDTH NORMAL TO JOINT	OPENING "G" NORMAL TO JT. @40°F	@64°F	@80°F
1	D. S. BROWN	DSB STRIP SEAL A2R-400	½"	4½"	1½"			
2	WATSON BOWMAN ACME	WABO STRIP SEAL SE-400	0"	4"	1½"			
2	R.J. WATSON, INC.	R.J. STRIP SEAL 400	0"	4"	1½"			
1	HEXCEL FYFE CO.	STRIP J200-C ES500	¼"	5½"	1½"			

5" MOTION RANGE

** GROUP	MANUFACTURER	ITEM NAME	OPENING "G" NORMAL TO JT. MIN.	OPENING "G" NORMAL TO JT. MAX.	MIN. INSTALLATION WIDTH NORMAL TO JOINT	OPENING "G" NORMAL TO JT. @40°F	@64°F	@80°F
1	D. S. BROWN	DSB STRIP SEAL L2-500	½"	5½"	1½"			
2	WATSON BOWMAN ACME	WABO STRIP SEAL SE-500	0"	5"	1½"			
2	R.J. WATSON, INC.	R.J. STRIP SEAL 500	½"	5"	1½"			

** GROUP COLUMN NOT TO BE SHOWN IN CONTRACT PLANS. FOR DESIGN PURPOSES ONLY.

SHEET ____ JOB NO. ____ SR 9.1-A2-1

Bridge Design Engr.	M:\STANDARDS\Expansion Joints\STRIP SEAL DETAILS.man								
Supervisor					REGION NO.	STATE	FED. AID PROJ. NO.	SHEET NO.	TOTAL SHEETS
Designed By					10	WASH.			
Checked By					JOB NUMBER				
Detailed By									
Bridge Projects Engr.									
Prelim. Plan By									
Architect/Specialist	DATE	REVISION	BY	APPD					

Tue May 16 14:39:46 2006

BRIDGE AND STRUCTURES OFFICE

Washington State Department of Transportation

EXPANSION JOINTS

EXPANSION JOINT DETAILS STRIP SEAL

BRIDGE SHEET NO.

SHEET OF SHEETS

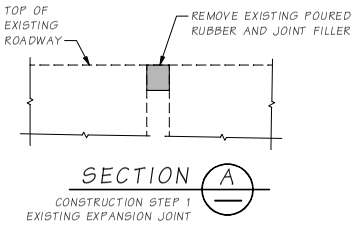

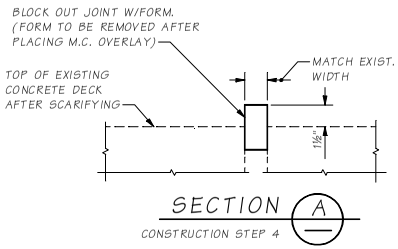

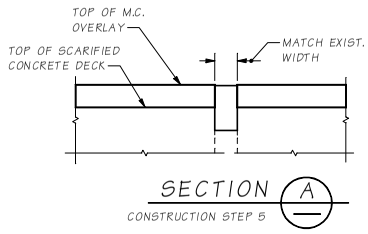

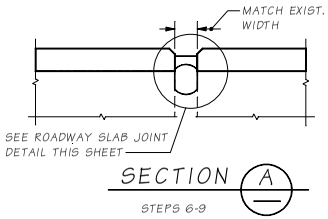

CONSTRUCTION STEPS:

1. REMOVE EXISTING POURED RUBBER & JOINT FILLER MATERIAL FROM EXPANSION JOINT.
2. CLEAN SIDES AND BOTTOM OF JOINT OPENING TO CLEAN AND SOUND CONCRETE.
3. BLOW JOINT OPENING WITH OIL-FREE COMPRESSED AIR TO REMOVE LAITANCE AND DEBRIS FROM REMOVAL OPERATIONS.
4. PLACE FORM IN EXISTING JOINT OPENING TO A HEIGHT LEVEL WITH THE FINAL ROADWAY ELEVATION.
5. PLACE MODIFIED CONCRETE OVERLAY TO FINAL RDW'Y ELEVATION.
6. REMOVE FORM FROM JOINT OPENING AND LIGHTLY SANDBLAST TO REMOVE ALL RESIDUE.
7. PRIME VERTICAL FACES OF JOINT IN ACCORDANCE WITH SEALANT MANUFACTURER'S RECOMMENDATION.
8. PLACE AN APPROPRIATELY SIZED BACKER ROD TO THE CORRECT DEPTH IN JOINT OPENING IN ACCORDANCE WITH SEALANT MANUFACTURER'S DIRECTIONS.
9. PLACE RAPID CURE SILICON SEALANT IN ACCORDANCE WITH MANUFACTURER'S DIRECTIONS.

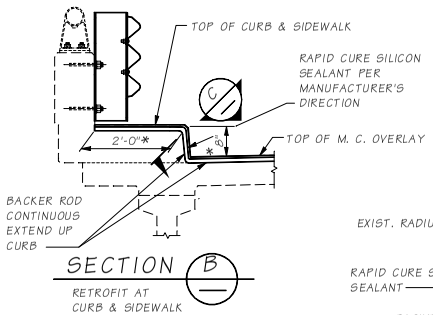

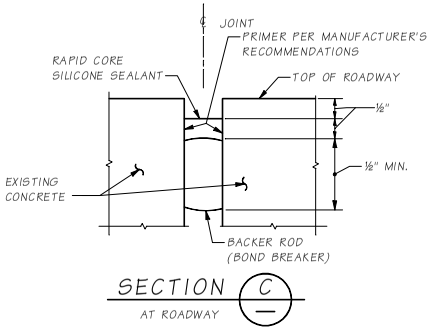

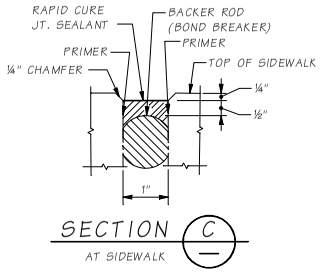

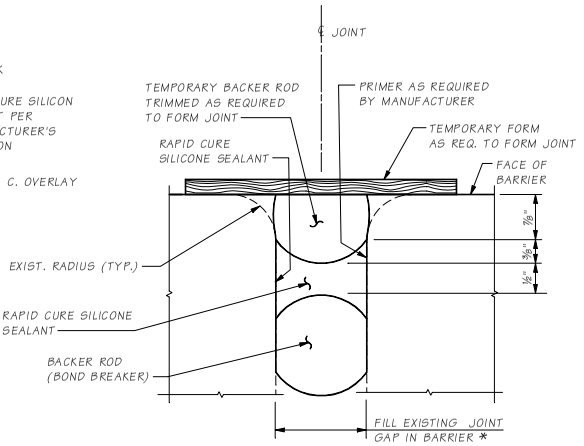

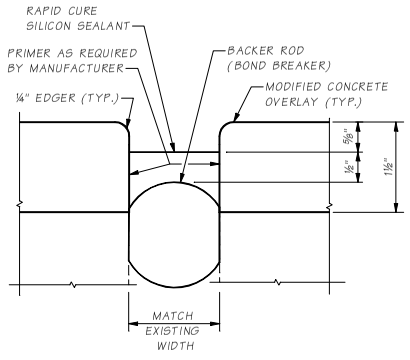

EXPANSION JOINT DETAIL

EXPANSION JOINT MODIFICATION AT ROADWAY SLAB

Bridge Design Engr.	M:\STANDARDS\Expansion Joints\SILICONE SEAL DETAILS.man								
Supervisor					REGION NO.	STATE	FED. AID PROJ. NO.	SHEET NO.	TOTAL SHEETS
Designed By					10	WASH.			
Checked By					JOB NUMBER				
Detailed By									
Bridge Projects Engr.									
Prelim. Plan By									
Architect/Specialist	DATE	REVISION	BY	APP'D					

BRIDGE AND STRUCTURES OFFICE

Washington State Department of Transportation

EXPANSION JOINTS

SILICONE SEAL EXPANSION JOINT DETAILS

BRIDGE SHEET NO. SHEET OF SHEETS

JOB NO. 9.1-A3-1 SHEET

Tue May 16 14:38:49 2006

Chapter 10
Signs, Barriers, Approach Slabs & Utilities Contents

10.1	**Sign and Luminaire Supports**		10.1-1
	10.1.1	Loads	10.1-1
	10.1.2	Bridge Mounted Signs	10.1-3
	10.1.3	Sign Bridges Mounted on Bridges	10.1-7
	10.1.4	Monotube Sign Structures	10.1-7
	10.1.5	Foundations	10.1-10
	10.1.6	Truss Sign Bridges: Foundation Sheet Design Guidelines	10.1-11
10.2	**Bridge Traffic Barriers**		10.2-1
	10.2.1	General Guidelines	10.2-1
	10.2.2	Bridge Railing Test Levels	10.2-1
	10.2.3	Available WSDOT Designs	10.2-2
	10.2.4	Design Criteria	10.2-5
10.3	**At Grade Traffic Barriers**		10.3-1
	10.3.1	Median Barriers	10.3-1
	10.3.2	Shoulder Barriers	10.3-2
	10.3.3	Traffic Barrier Moment Slab	10.3-2
	10.3.4	Precast Traffic Barrier	10.3-3
10.4	**Bridge Traffic Barrier Rehabilitation**		10.4-1
	10.4.1	Policy	10.4-1
	10.4.2	Guidelines	10.4-1
	10.4.3	Design Criteria	10.4-1
	10.4.4	WSDOT Bridge Inventory of Bridge Rails	10.4-2
	10.4.5	Available Retrofit Designs	10.4-2
	10.4.6	Available Replacement Designs	10.4-2
10.5	**Bridge Railing**		10.5-1
	10.5.1	Design	10.5-1
	10.5.2	Railing Types	10.5-1
10.6	**Bridge Approach Slabs**		10.6-1
	10.6.1	Notes to Region for Preliminary Plan	10.6-1
	10.6.2	Approach Slab Design and Detailing	10.6-2
	10.6.3	Approach Expansion Joints	10.6-2
	10.6.4	Skewed Approach Slabs	10.6-3
	10.6.5	Bridge Approach Approach Detailing	10.6-4
	10.6.6	Pavement Seats on Existing Bridges	10.6-4

10.7 Traffic Barrier on Approach Slabs 10.7-1
10.7.1 Approach Slab over Wing Walls, Cantilever Walls or Geosynthetic Walls 10.7-2
10.7.2 Approach Slab over SE Walls 10.7-3

10.8 Utilities Installed with New Construction 10.8-1
10.8.1 General Concepts 10.8-1
10.8.2 Utility Design Criteria 10.8-2
10.8.3 Box Girder Bridges 10.8-3
10.8.4 Traffic Barrier Conduit 10.8-4
10.8.5 Conduit Types 10.8-5
10.8.6 Utility Supports 10.8-5

10.9 Utility Review Procedure for Installation on Existing Bridges 10.9-1
10.9.1 Utility Review Checklist 10.9-1

10.10 Drainage Design 10.10-1

Appendix A
Appendix 10.1-A1-1 Montube Sign Structures Sign Bridge Layout 10.1-A1-1
Appendix 10.1-A1-2 Montube Sign Structures Structural Cantilever Layout 10.1-A1-2
Appendix 10.1-A2-1 Montube Sign Structures Structural Details 1 10.1-A2-1
Appendix 10.1-A2-2 Montube Sign Structures Structural Details 2 10.1-A2-2
Appendix 10.1-A3-1 Montube Sign Structures Foundation Type 1 10.1-A3-1
Appendix 10.1-A3-2 Montube Sign Structures Foundation Types 2 and 3 10.1-A3-2
Appendix 10.1-A4-1 Montube Sign Structure F-Shaped Traffic Barrier Foundation 10.1-A4-1
Appendix 10.1-A4-2 Montube Sign Structure Single Slope Traffic Barrier Foundation 10.1-A4-2
Appendix 10.1-A5-1 Truss Sign Structures F-Shaped Traffic Barrier Foundation 10.1-A5-1
Appendix 10.1-A5-2 Truss Sign Structures Single Slope Barrier Foundation 10.1-A5-2

10.1 Sign and Luminaire Supports

10.1.1 Loads

A. General

The reference used in developing the following office criteria is the AASHTO "*Standard Specifications for Structural Supports for Highway Signs, Luminaires, and Traffic Signals*," Fourth Edition Dated 2001 including interims, and shall be the basis for analysis and design.

B. Dead Loads

Sign (incl. stiffeners)	3.25 lbs./ft.^{2}
Luminaire (effective projected area of head = 1.1 sq. ft.)	60 lbs./each
Fluorescent Lighting	3.0 lbs./ln. ft
Standard Signal Head	60 lbs./each
Mercury Vapor Lighting	6.0 lbs./ln. ft
Sign Brackets	Calc.
Structural Members	Calc.
5 foot wide maintenance walkway (incl. sign mounting brackets & handrail)	160 lbs./ln. ft.
Signal Head w/3 lenses (effective projected area = 9.2 sq ft.)	60 lbs. each

C. Wind Loads

A major change in the new AASHTO 2001 Specification wind pressure equation is the use of a 3 second gust wind speed in place of a fastest-mile wind speed used in the previous specification. The 3 second wind gust map in AASHTO is based on the wind map in ANSI/ASCE 7-95.

Basic wind speed of 90 mph shall be used in computing design wind pressure using Equation 3-1 of AASHTO Section 3.8.1.

Do not use the Alternate Method of Wind Pressures given in Appendix C of the AASHTO 2001 Specifications.

D. Design Life and Recurrence Interval (Table 3-3, AASHTO 2001)

50 years for luminaire support exceeding 50 ft. in height and overhead sign structures.

25 years for luminaire support structures less than and including 50 ft. in height and traffic signal structures.

10 years for roadside sign structures.

E. Ice Loads

3 psf applied around all the surfaces of structural supports, horizontal members, and luminaires, but applied to only one face of sign panels (AASHTO Section 3.7).

F. Fatigue Design:

Fatigue design shall conform to AASSTO Section 11. Fatigue Categories are listed in Table 11-1. Sign and signal bridges do not require fatigue design. Cantilever structures, poles, and bridge mounted sign brackets shall conform to the following fatigue categories.

Fatigue Category I for overhead cantilever sign structures and bridge mounted sign brackets.

Fatigue Category II for high-level (high-mast) lighting poles in excess of 98 ft. in height

Fatigue Category III for overhead cantilever traffic signal structures

G. Live Load:

A live load consisting of a single load of 500 lb distributed over 2.0 ft. transversely to the member shall be used for designing members for walkways and platforms. The load shall be applied at the most critical location where a worker or equipment could be placed, see AASHTO 2001, Section 3.6.

F. Group Load Combinations:

Sign, luminaire, and signal support structures are designed using the maximum of the following four load groups (AASHTO Section 3.4 and Table 3-1):

Group Load	Load Combination	Percent of *Allowable Stress
I	DL	100
II	DL+W**	133
III	DL+Ice+½(W**)	133
IV	Fatigue	See AASHTO Section 11 for Fatigue loads and stress range

* No load reduction factors shall be applied in conjunction with these increased allowable stresses.

** W—Wind Load

10.1.2 Bridge Mounted Signs

A. Vertical Clearance

The bottom of the sign lighting bracket shall be placed a minimum of 17 feet 6 inches and a maximum of 21 feet 0 inches above the lower roadway (see Figure 10.1.2-1). The minimum clearance is a requirement of the current electrical code. Region Design may approve greater or lesser clearance on an individual project basis.

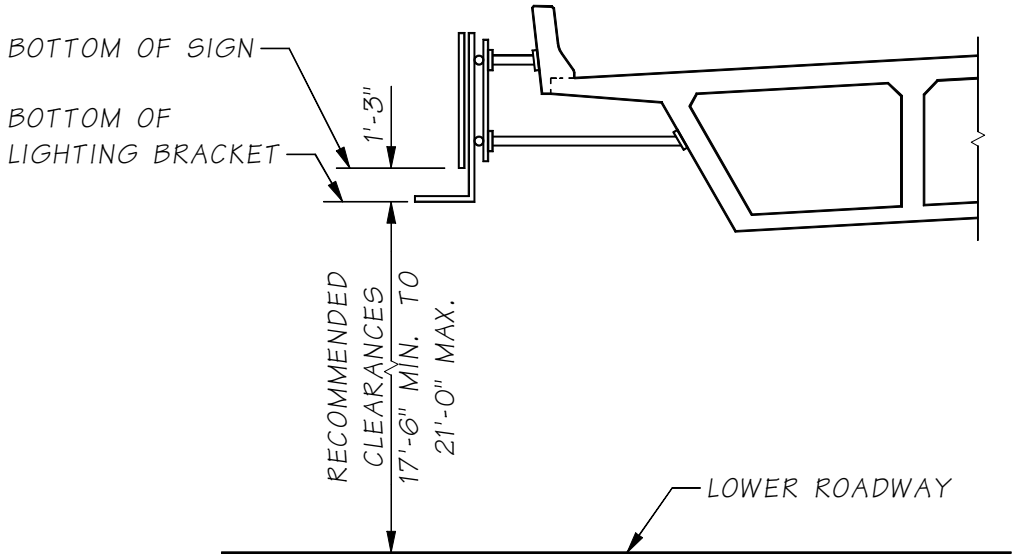

Sign Vertical Clearance
Figure 10.1.2-1

B. Geometrics

1. Signs should be installed at approximate right angles to approaching motorists. For structures above a tangent section of roadway, signs may be installed parallel to the structure provided the structure skew does not exceed 10°. If the structure skew exceeds 10°, support brackets shall be designed to provide a sign skew of no more than 10° from perpendicular to the lower roadway (see Figure 10.1.2-2).

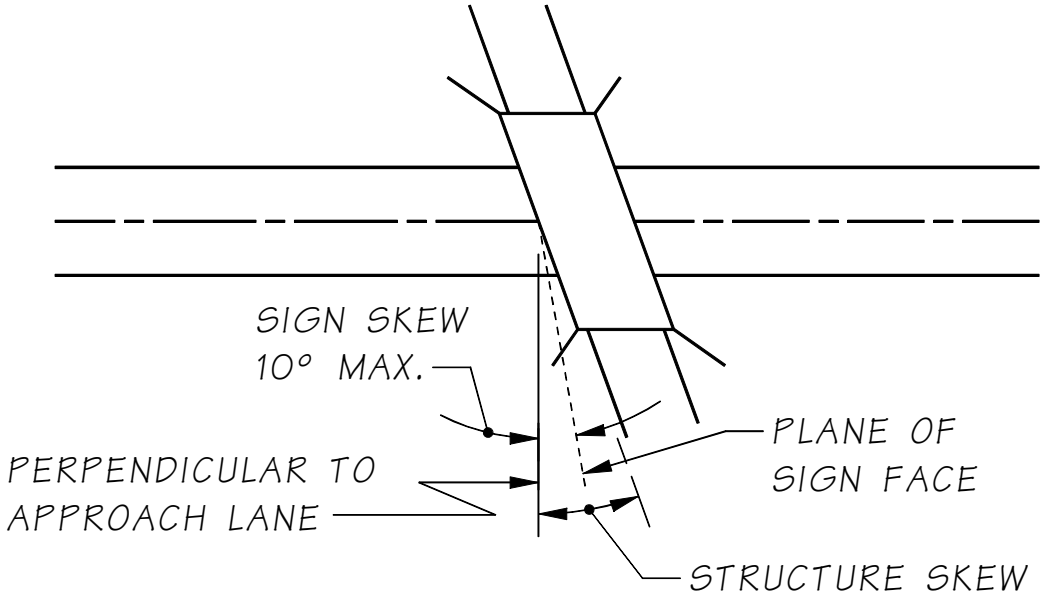

CASE A - STRUCTURE SKEW GREATER THAN 10°

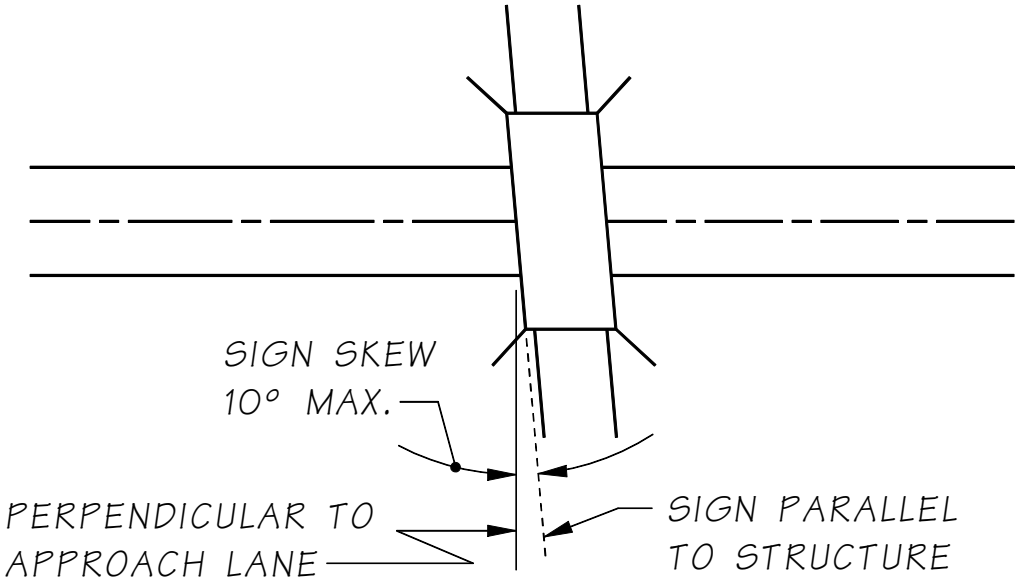

CASE B - STRUCTURE SKEW 10° OR LESS

Sign Skew on Tangent Roadway
Figure 10.1.2-2

2. For structures located on or just beyond a horizontal curve of the lower roadway, signs may be installed parallel to the structure provided the structure chord-skew does not exceed 10°. If the structure chord-skew exceeds 10°, support brackets shall be designed to provide a sign chord-skew of no more than 10° from perpendicular to the chord-point determined by the approach speed (see Figure 10.1.2-3).
3. The top of the sign shall be level.

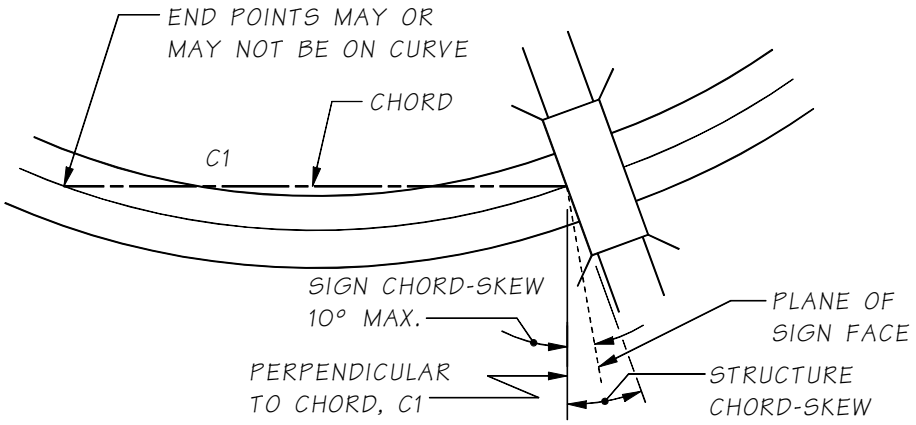

CASE A - STRUCTURE CHORD-SKEW GREATER THAN 10°

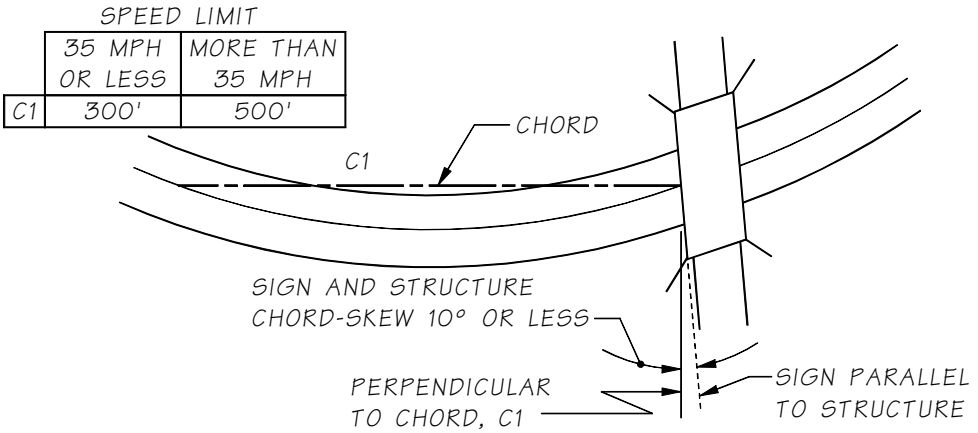

CASE B - STRUCTURE CHORD-SKEW 10° OR LESS

Sign Skew on Curved Roadway

Figure 10.1.2-3

C. Aesthetics

1. Preferably, the top of the sign and its support should not project above the bridge rail (see Figure 10.1.2-4).
2. When possible, the support structure should be hidden from view of traffic.
3. The sign support shall be detailed in such a manner that will permit the sign and lighting bracket to be installed level.

4. When the sign support will be exposed to view, special consideration is required in determining member sizes and connections to provide as pleasing an appearance as possible.

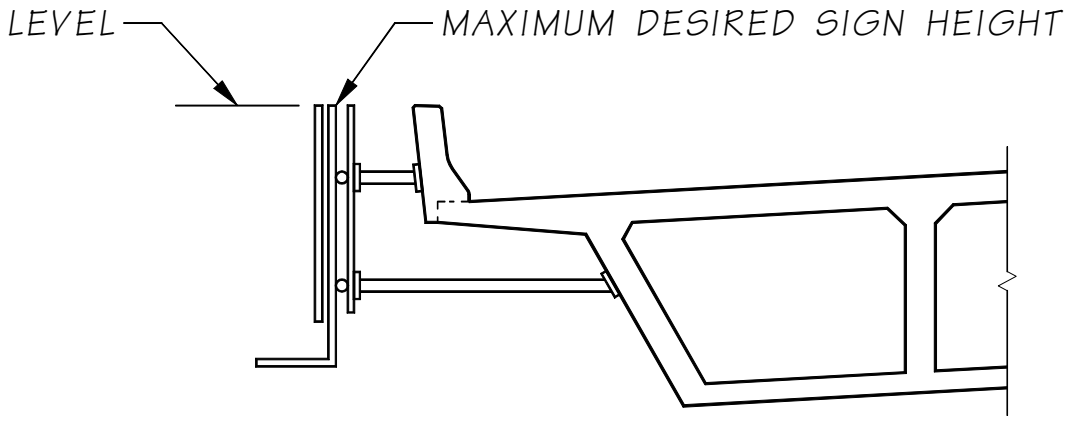

Sign Vertical Location
Figure 10.1.2-4

D. Sign Placement

1. When possible, the designer should avoid locating signs under bridge overhangs. This causes partial shading or partial exposure to the elements and problems in lifting the material into position and making the required connections. Signs shall never be placed directly under the drip-line of the structure. These conditions may result in uneven fading, discoloring, and difficulty in reading. When necessary to place a sign under a bridge due to structural or height requirements, the installation should be reviewed by the Region Traffic Design Office.
2. When sign support brackets are located on the structure, a minimum of 2 inches of clearance shall be provided between back side of the sign support and edge of the structure. See Figure 10.1.2-5.

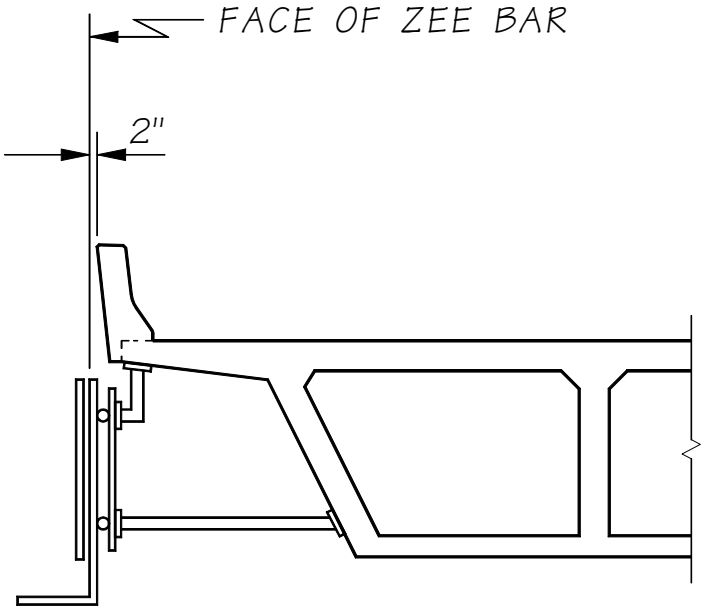

Sign Horizontal Location
Figure 10.1.2-5

E. Installation

Expansion-type concrete anchors are not allowed for attaching sign support brackets to the structure because the loads imposed on the anchors can cause vibration and pull-out. New structures shall use either cast in place ASTM A 307 anchor rods, or resin bonded anchors. Existing structures shall use resin bonded anchors. Resin bonded anchor systems require the following notes to be included in the Plan sheets:

(a) Resin bonded anchor system is to be installed using manufacturer recommendations in dry conditions.

(b) Torque resin bonded anchor nuts to proof load.

F. Dimensioning

Where shown on the plans, the sign size shall be expressed in terms of horizontal by vertical dimension, i.e., X x Y, where X = horizontal dimension and Y = vertical dimension.

10.1.3 Sign Bridges Mounted on Bridges

A. Design Loads

Design loads for the supports of the sign bridges shall be calculated based on assuming a 12-foot deep sign over the entire roadway width, under the sign bridge. This will account for any signs that may be added in the future. The design loads shall follow the same criteria as described in Section 10.1.1. Loads from the sign bridge shall be included in the design of the supporting bridge.

B. Vertical Clearance

Vertical clearance for sign bridges follow the same requirements as Bridge-Mounted Signs as stated in Section 10.1.2 .

C. Geometrics

Sign structures shall be placed at approximate right angles to approaching motorists. Dimensions and details of sign structures are shown in the *Standard Plans* G-2, G-2a, G-3, G-3a and Appendix 10.1-A1-1, 10.1-A1-2 and 10.1-A2-1, 10.1-A2-2. When maintenance walkways are included, refer to *Standard Plan* G-6, G-6a and G-6b.

10.1.4 Monotube Sign Structures

A. Sign Bridge Standard Design

Table 10.1.4-1 provides the standard structural design information to be used for a Sign Bridge Layout, Appendix 10.1-A1-1; along with the Structural Detail sheets, which are Appendix 10.1-A2-1 and Appendix 10.1-A2-2.

B. Cantilever Standard Design

Table 10.1.4-2 provides the standard structural design information to be used for a Cantilever Layout, Appendix 10.1-A1-2; along with the Structural Detail sheets, which are Appendix 10.1-A2-1 and Appendix 10.1-A2-2.

STANDARD MONOTUBE SIGN BRIDGES

SPAN LENGTH	POSTS Ⓥ				BEAM A Ⓥ				BEAM B Ⓥ				BEAM C Ⓥ				
"S"	"H"	"A"	"B"	"T1"	"L1"	"B"	"C"	"T2"	"L2"	"B"	"C"	"T2"	"L3"	"B"	"C"	"T2"	CAMBER
LESS THAN 60'-0"	30'-0" OR LESS	1'-6"	2'-0"	½"	6'-0"	2'-0"	2'-0"	⅜"	0'-0"	-	-	-	13'-0" TO 48'-0"	2'-0"	2'-0"	⅜"	2¾"
60'-0" TO 75'-0"	30'-0" OR LESS	1'-6"	2'-3"	½"	6'-0"	2'-3"	2'-0"	⅜"	9'-0" TO 14'-0"	2'-3"	2'-0"	⅜"	30'-0" TO 35'-0"	2'-3"	2'-0"	⅜"	3¾
75'-0" TO 90'-0"	30'-0" OR LESS	1'-6"	2'-3"	⅝"	6'-0"	2'-3"	2'-0"	⅜"	14'-0" TO 19'-0"	2'-3"	2'-0"	⅜"	35'-0" TO 40'-0"	2'-3"	2'-0"	⅜"	5"
90'-0" TO 105'-0"	30'-0" OR LESS	1'-9"	2'-6"	⅝"	6'-0"	2'-6"	2'-3"	½"	19'-0" TO 26'-6"	2'-6"	2'-3"	½"	40'-0"	2'-6"	2'-3"	½"	6"
105'-0" TO 120'-0"	30'-0" OR LESS	1'-9"	2'-6"	⅝"	6'-0"	2'-6"	2'-3"	½"	26'-6" TO 34'-0"	2'-6"	2'-3"	½"	40'-0"	2'-6"	2'-3"	½"	7½"
120'-0" TO 135'-0"	30'-0" OR LESS	2'-0"	2'-6"	⅝"	6'-0"	2'-6"	2'-6"	½"	34'-0" TO 41'-6"	2'-6"	2'-6"	½"	40'-0"	2'-6"	2'-6"	½"	8½"
135'-0" TO 150'-0"	30'-0" OR LESS	2'-0"	2'-6"	⅝"	6'-0"	2'-6"	2'-6"	½"	41'-6" TO 49'-0"	2'-6"	2'-6"	½"	40'-0"	2'-6"	2'-6"	½"	10½ "

SPAN LENGTH	POST BASE Ⓥ					BOLTED SPLICE #1 L1 TO L2 AND L1 TO L3						BOLTED SPLICE #2 L2 TO L3						MAXIMUM SIGN AREA
"S"	"D1"	"S5"	"S6"	"T3"	"T6"	"S1"	"S2"	"S3"	"S4"	"T4"	"T5"	"S1"	"S2"	"S3"	"S4"	"T4"	"T5"	
LESS THAN 60'-0"	1½"	4	4	2¼"	¾"	5	-	5	-	2"	⅝"	-	-	-	-	-	-	500 SQ. FT.
60'-0" TO 75'-0"	1¾	4	4	2¼ "	¾¾"	6	-	5	-	2"	⅝"	6	-	5	-	2¼"	¾"	600 SQ. FT.
75'-0" TO 90'-0"	1¾"	4	4	2½"	¾"	6	-	5	-	2"	⅝"	6	-	5	-	2¼"	¾"	750 SQ. FT.
90'-0" TO 105'-0"	1¾"	4	5	2½"	1"	7	-	6	-	2"	⅝"	7	5	6	4	2½"	1"	750 SQ. FT.
105'-0" TO 120'-0"	1¾"	4	5	2½"	1"	7	-	6	-	2"	⅝"	7	5	6	4	2½"	1"	850 SQ. FT.
120'-0" TO 135'-0"	2"	4	5	2½"	1"	7	-	7	-	2"	⅝"	7	5	7	5	2½"	1"	800 SQ. FT.
135'-0" TO 150'-0"	2"	4	5	2½"	1"	7	-	7	-	2"	⅝"	7	5	7	5	2½"	1"	800 SQ. FT.

Ⓥ - DENOTES MAIN LOAD-CARRYING TENSILE MEMBERS OR TENSION COMPONENTS OF FLEXURAL MEMBERS

Table 10.1.4-1

STANDARD CANTILEVER SIGN BRIDGES

SPAN LENGTH	POST Ⓥ				BEAM A Ⓥ				BEAM B Ⓥ				
"S"	"H"	"A"	"B"	"T1"	"L1"	"B"	"C"	"T2"	"L2"	"B"	"C"	"T2"	CAMBER
LESS THAN 20'-0"	30'-0" OR LESS	1'-6"	2'-0"	⅜"	6'-0"	2'-0"	2'-0"	⅜"	14'-0"	2'-0"	2'-0"	⅜"	2"
20'-0" TO 30'-0"	30'-0" OR LESS	1'-6"	2'-0"	½"	6'-0"	2'-0"	2'-0"	⅜"	14'-0" TO 24'-0"	2'-0"	2'-0"	⅜"	3½"

SPAN LENGTH	POST BASE					BOLTED SPLICE						MAXIMUM SIGN AREA
"S"	"D1"	"S5"	"S6"	"T3"	"T6"	"S1"	"S2"	"S3"	"S4"	"T4"	"T5"	
LESS THAN 20'-0"	1½"	4	4	2"	¾"	5	-	5	-	2	⅝	168 SQ. FT.
20'-0" TO 30'-0"	2"	4	4	2"	¾"	5	4	5	4	2½	⅝	252 SQ. FT.

Ⓥ - DENOTES MAIN LOAD-CARRYING TENSILE MEMBERS OR TENSION COMPONENTS OF FLEXURAL MEMBERS

Table 10.1.4-2

C. Monotube Sheet Guidelines

The following guidelines apply when using the Monotube Sign Structure BDM sheets 10.1-A1-, 10.1-A1-2 and 10.1-A2-1, 10.1-A2-2.

1. Each sign structure shall be detailed and must specify:
   a. Sign structure base Elevation, Station and Number.
   b. What type of foundation (1, 2, or 3) is to be used for the structure. If Foundation Type 1, 2 or 3 are not used, then the average lateral bearing pressure for each foundation shall be noted on the Layout sheet.
   c. If applicable, label the Elevation View "Looking Back on Stationing".
2. Designers shall verify the cross-referenced page numbers and details are correct.

B. Monotube Quantities

Quantities for structural steel are given in Table 10.1.4-3.

Quantities									
ASTM A572 GR. 50 or ASTM 588	A	B	C	D	E	F	G	H	I
Post (plf)	99	132	132	144	176	204	204	215	215
Base PL (ea)	431	490	490	578	585	654	654	688	688
Beam, near Post (plf)	116	116	116	124	124	139	139	171	195
Span Beam (plf)	116	116	116	124	124	162	185	195	195
Corner Stiff. (ea set)	209	204	204	238	236	312	312	371	369
Splice PL #1 (1 pr)	482	482	482	692	692	892	883	780	780
Splice PL #2 (1 pr)	—	—	482	615	615	718	802	715	780
Brackets (ea)	60	60	60	65	65	69	69	70	70
6″ Hand Hole (ea)	18	18	18	18	18	18	18	18	18
6″ x 11″ Hand Hole (ea)	30	30	30	30	30	30	30	30	30
Anchor Bolt Pl (ea)	175	175	175	185	185	311	311	326	326
Seal Plates (1 bridge)	217	216	316	614	612	770	674	860	860

A) 20' < Cantilever
B) 20' to 30 Cantilever
C) 60' and Less Sign Bridge
D) 60' to 75' Sign Bridge
E) 75' to 90' Sign Bridge
F) 90' to 105' Sign Bridge
G) 105' to 120' Sign Bridge
H) 120' to 135' Sign Bridge
I) 135' to 150' Sign Bridge

Sign Structure Steel Quantities
Table 10.1.4-3

10.1.5 Foundations

A. Foundation Types

The Geotechnical Branch shall be consulted as to which foundation type is to be used. Standard foundation designs are provided in WSDOT *Standard Plans* G-2a and G-3a; and in BDM Section 10.1.5. The following paragraphs describe the four types of foundations detailed in this section.

1. The Type 1 Foundation, a drilled shaft, is the preferred foundation for sign, luminaire, and signal supports. The standard drilled shafts are designed for a lateral bearing pressure of 2,500 psf. See Appendix 10.1-A3-1 for Type 1 Foundation standard design information.
2. The Type 2 Foundation is an alternate to Type 1 when drilled shafts are not suitable to the site. Type 2 Foundations are designed for a lateral bearing pressure of 2,500 psf. See Appendix 10.1-A3-2 for Type 2 Foundation standard design information.
3. The Type 3 Foundation is designed for poor soil conditions where the lateral bearing pressure is between 2,500 psf and 1,500 psf. The standard details for both Type 2 and 3 Foundations are found on Appendix 10.1-A3-2. See Appendix 10.1-A3-2 for Type 3 Foundation standard design information.
4. Barrier Foundation Types (1-3) are foundations that include a barrier in the top portion of the Standard foundation. Types 1, 2 and 3 have been modified to include the required Traffic Barrier shape for the project. Appendix 10.1-A4-1 details a double faced "F" shape barrier. Appendix 10.1-A4-2 details a single slope barrier.

Foundation Quantities for Appendix 10.1-A3-1, 10.1-A3-2 are described below.

1. Barrier quantities are approximate and can be used for all Foundation Types:
   (Both single slope or F-shape barriers)

Class 4000 Concrete	0.289 CY/LF (over shaft foundation)
Grade 60 rebar	372 lbs.

2. Miscellaneous steel quantities for all foundation types:
   (anchor bolts, anchor plate, and template)

60 feet & under	=	1,002 pounds
61 feet to 90 feet	=	1,401 pounds
91 feet to 120 feet	=	1,503 pounds
121 feet to 150 feet:		Barrier mounted sign bridge not recommended for these spans.

3. Type 1-3 Foundation quantities for concrete, rebar and excavation are given in Table 10.1.5-1. For Sign Bridges, the quantities shown below are for one foundation and there are two foundations per sign bridge.

Sign Structure Foundation Material Quantities						
	Cantilever Signs		Sign Bridges			
Concrete Cl. 3000 (cu. yard)	20' & Under	20' –30'	60' & Under	60' – 90'	90' – 120'	120' – 150'
Type 1	6.3	7.5	7.7	9.4	10.6	11.4
Type 2	8.0	10.5	10.0	12.2	14.1	15.0
Type 3	11.1	14.1	13.0	16.1	18.6	20.0
Rebar Gr. 60 Pounds						
Type 1	685	1,027	1,168	2,251	3,256	4,255
Type 2	772	1,233	1,190	1,724	2,385	2,838
Type 3	917	1,509	1,421	2,136	2,946	3,572
Excavation (cu. yard)						
Type 1	9.8	10.9	10.9	12.8	14.1	14.9
Type 2	20.7	25.7	24.6	29.0	32.9	34.6
Type 3	29.0	34.6	32.9	39.0	44.0	47.8

Table 10.1.5-1

10.1.6 Truss Sign Bridges: Foundation Sheet Design Guidelines

There are four items that should be addressed when using the BDM Truss Sign Bridge Barrier Foundation sheet (Appendix 10.1-A5-1), which are outlined below. WSDOT *Standard Plan* C-14i is available for use as the single slope barrier version of Appendix 10-A5-2.

1. Determine conduit needs. If none exist, delete all references to conduit. If conduit is required, verify with the Region as to size and quantity.
2. Show sign bridge base elevation, number, "D" dimension and station.
3. Transition section can be 10 feet 0 inches or 12 feet 6 inches.
4. The quantities for the barrier as shown on the sheets are as follows:

Class 4000 concrete	0.185 CY/LF above foundation cap 0.269 CY/LF outside foundation cap
Gr. 60 Rebar	Varies based on the type of foundation and the "D" dimension.

10.2 Bridge Traffic Barriers

10.2.1 General Guidelines

The design criteria for bridge traffic barriers on structures shall be in accordance with Chapter 13 of the LRFD Bridge Design Specifications adopted by AASHTO. WSDOT's bridge traffic barrier standard test level is TL-4.

The WSDOT Bridge and Structures standard for new bridge traffic barriers is a 32-inch high F-Shape concrete barrier. This shape is the preferred shape by the FHWA. It should be used on all interstates, major highway routes, and over National Highway System (NHS) routes unless special conditions apply.

Use of a Single Slope concrete bridge traffic barrier shall be limited to locations where there is Single Slope concrete barrier on the approach grade to a bridge or for continuity within a corridor. The Single Slope bridge traffic barrier is 34 inches high which is consistent with the heights being used on grade applications. (See WSDOT Design Manual Section 710 for additional background and criteria.)

Use the taller 42-inch high bridge traffic barriers on interstate or freeway routes only in the following circumstances:

- Accident history suggests a need.
- Large trucks make up a significant portion of the ADT
- Adverse roadway geometrics increase the possibility of hitting the traffic barrier at a high angle (such as on ramps for freeway to freeway connections with sharp curvature in the alignment).
- For the protection of schools, businesses or other important facilities below the bridge.

In addition, NCHRP Report 350 was adopted by AASHTO to give specific requirements for crash testing of bridge barriers prior to their use on all new or retrofitted bridge structures. The LRFD Bridge Design Specifications differentiate crash test criteria for various test levels depending upon traffic volume, design speed, vehicle mix, and other factors which produce a vast variation in traffic railing performance needs from one site to another.

A list of crash tested traffic barriers can be found thru the FHWA at:
http://safety.fhwa.dot.gov/roadway_dept/road_hardware/bridgerailings.htm

Bridge traffic barriers shall be rigidly connected to the bridge deck. Median bridge traffic barriers shall be either rigidly connected to bridge deck or allow a minimum of two feet of slide distance between the toe of the traffic barrier and the pavement lane marking.

10.2.2 Bridge Railing Test Levels

It must be recognized that bridge traffic barrier performance needs differ greatly from site to site. Barrier designs and costs should match facility needs. This concept is embodied in the AASHTO LRFD Bridge Design Specifications. Six different bridge railing test levels, TL-1 thru TL-6, and associated crash test/performance requirements are given in Chapter 13 of these design specifications along with guidance for determining the appropriate test level for a given bridge.

10.2.3 Available WSDOT Designs

A. Test Level 2

1. Service Level 1 (SL-1) Weak Post Guardrail

   This bridge traffic barrier is a crash tested weak post rail system. It was developed by Southwest Research Institute and reported in NCHRP Report 239 for low-volume rural roadways with little accident history. We have utilized this design on some of our short concrete spans and on our timber bridges. A failure mechanism is built into this rail system such that upon a 2 kip applied impact load the post will break away from the mounting bracket. The thrie beam guardrail will contain the vehicle by virtue of its ribbon strength. This failure mechanism assures minimal or no damage to the bridge deck and stringers. The appropriate guardrail approach transition shall be a Case 14 placement as shown on WSDOT Standard Plan C-2h. For complete details see Appendix 10.4-A1.

2. Texas T-411 Aesthetic Concrete Baluster

   Texas developed this standard for a section of highway that was considered to be a historic landmark. The existing deficient concrete baluster rail was replaced with a much stronger concrete baluster that satisfactorily passed the crash test performance criteria set forth by the NCHRP Report 230. For details visit TXDOT's Bridge and Structures web site at: http://www.dot.state.tx.us/brg/default.htm

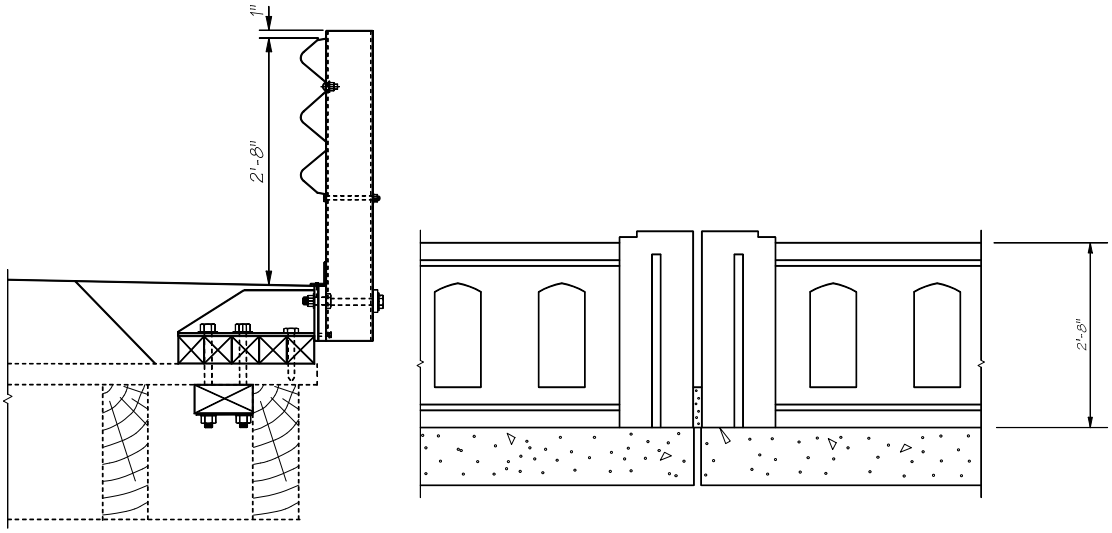

Figure 10.2.3-1

B. Test Level 4 Traffic Barriers

1. Traffic Barrier – Shape F

   This configuration was crash tested in the late 1960's, along with the New Jersey Shape, under NCHRP 230 and again recently at this test level under NCHRP 350. The steeper vertical shape tested better than the New Jersey face and had less of an inclination to roll vehicles over upon impact. The 3" toe of the traffic barrier is the maximum depth that an ACP or HMA overlay can be placed. For complete details see Appendix 10.2-A1 & A2.

2. Traffic Barrier – Single Slope

   This concrete traffic barrier system was designed by the state of California in the 1990's to speed up construction by using the "slip forming" method of construction. It was tested under NCHRP 350. WSDOT has increased the height from 32" to 34" to match the approach traffic barrier height and to allow the placement of one HMA overlay. Due to inherent problems with the "slip forming" method of traffic barrier construction WSDOT has increased the concrete cover on the traffic side from 1 ½" to 2 ½". For complete details see Appendix 10.2-A3.

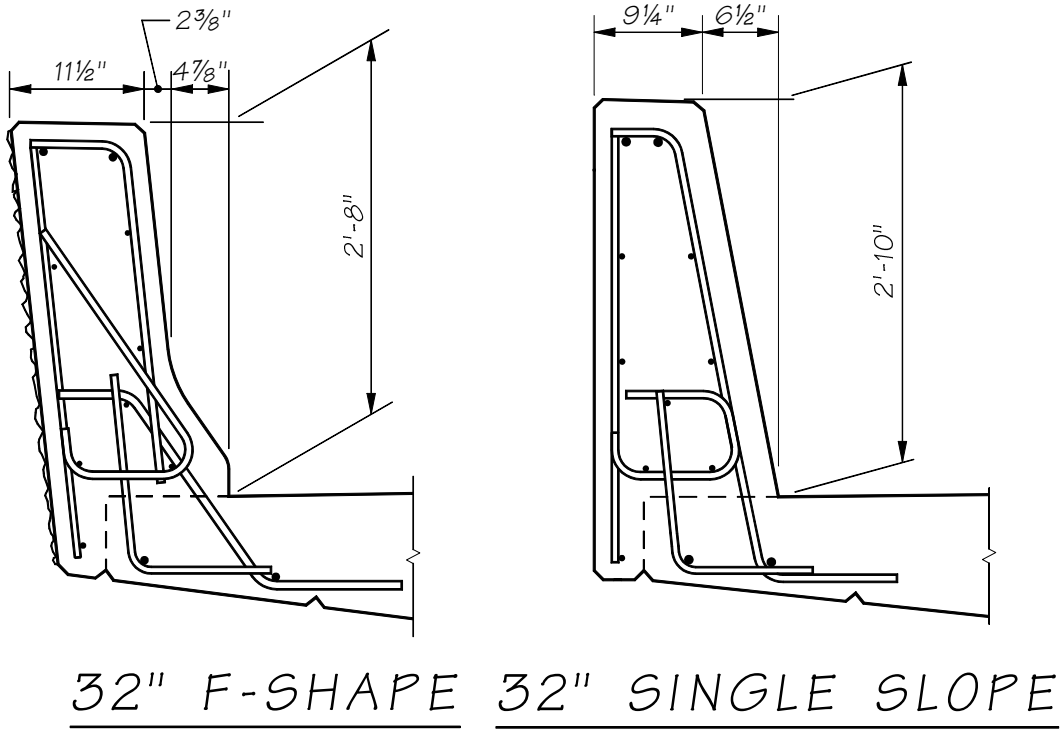

Figure 10.2.3-2

3. Pedestrian Barrier

   This crash tested rail system offers a simple to build concrete alternative to the New Jersey and F-Shape configurations. This system was crash tested under both NCHRP 230 and 350. Since the traffic face geometry is better for pedestrians and bicyclists, WSDOT uses this system primarily in conjunction with a sidewalk. For complete details see Appendix 10.2-A4.

4. Oregon 2-Tube Curb Mounted Traffic Barrier

   This is another crash tested traffic barrier that offers a lightweight, see-through option. This system was crash tested under both NCHRP 230 and 350. A rigid thrie beam guardrail transition is required at the bridge ends. For details see the Oregon Bridge and Structure web site at: http://egov.oregon.gov/ODOT/HWY/ENGSERVICES/bridge_drawings.shtml#Bridge_200___Bridge_Rails

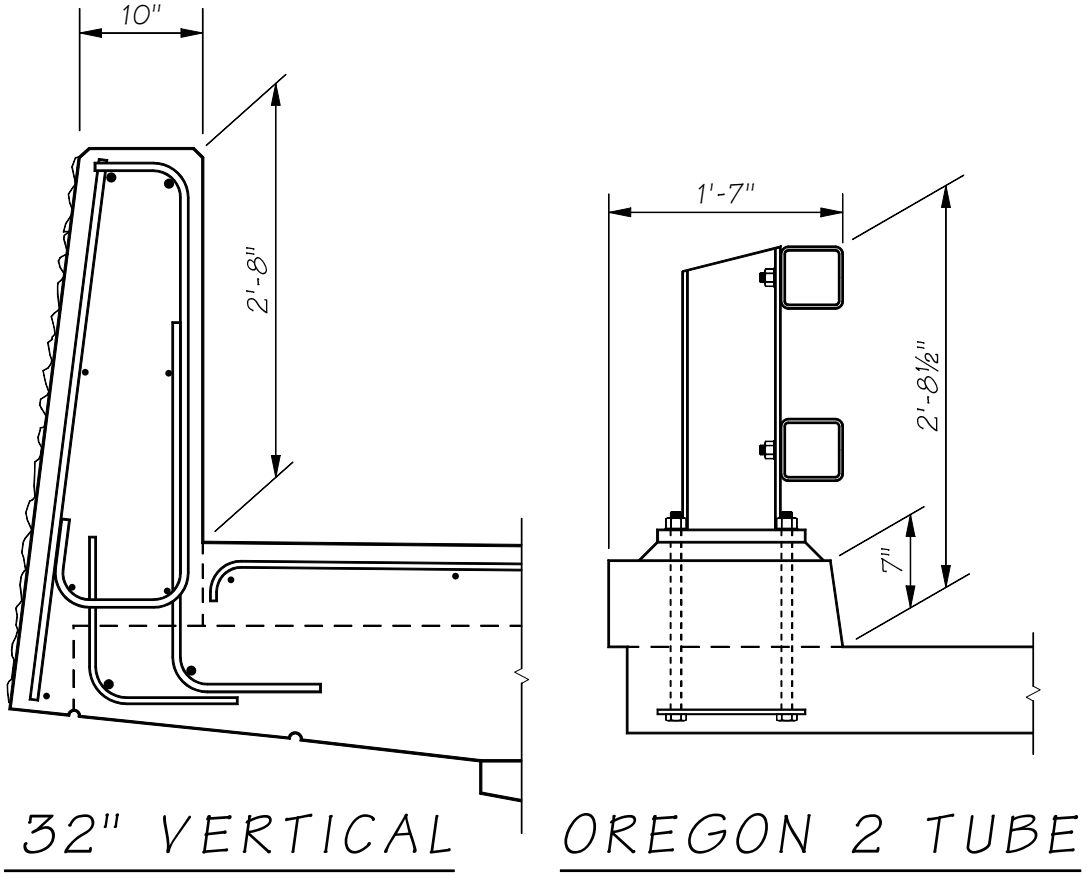

Figure 10.2.3-3

C. Test Level 5 Traffic Barriers

1. Traffic Barrier – Shape F 42”

   This barrier is very similar to the 32 inch F-shape concrete barrier in that the slope of the front surface is the same except for height. This barrier and the other bridge traffic barriers within this section have been crash tested for a 50,000 lb. tractor-trailer. For complete details see Appendix 10.2-A5.

   This type of barrier was used on a portion of the Seattle Access project in Seattle due to the large proportion of trucks and buses and to protect buildings below the bridge structure. This barrier is also used on bridges with sharp curvature such as Bridge 101/515E-S.

2. Traffic Barrier – Single Slope 42”

   This crash tested option offers a simple to build alternative to the Shape F configuration. For complete details see Appendix 10.2-A6.

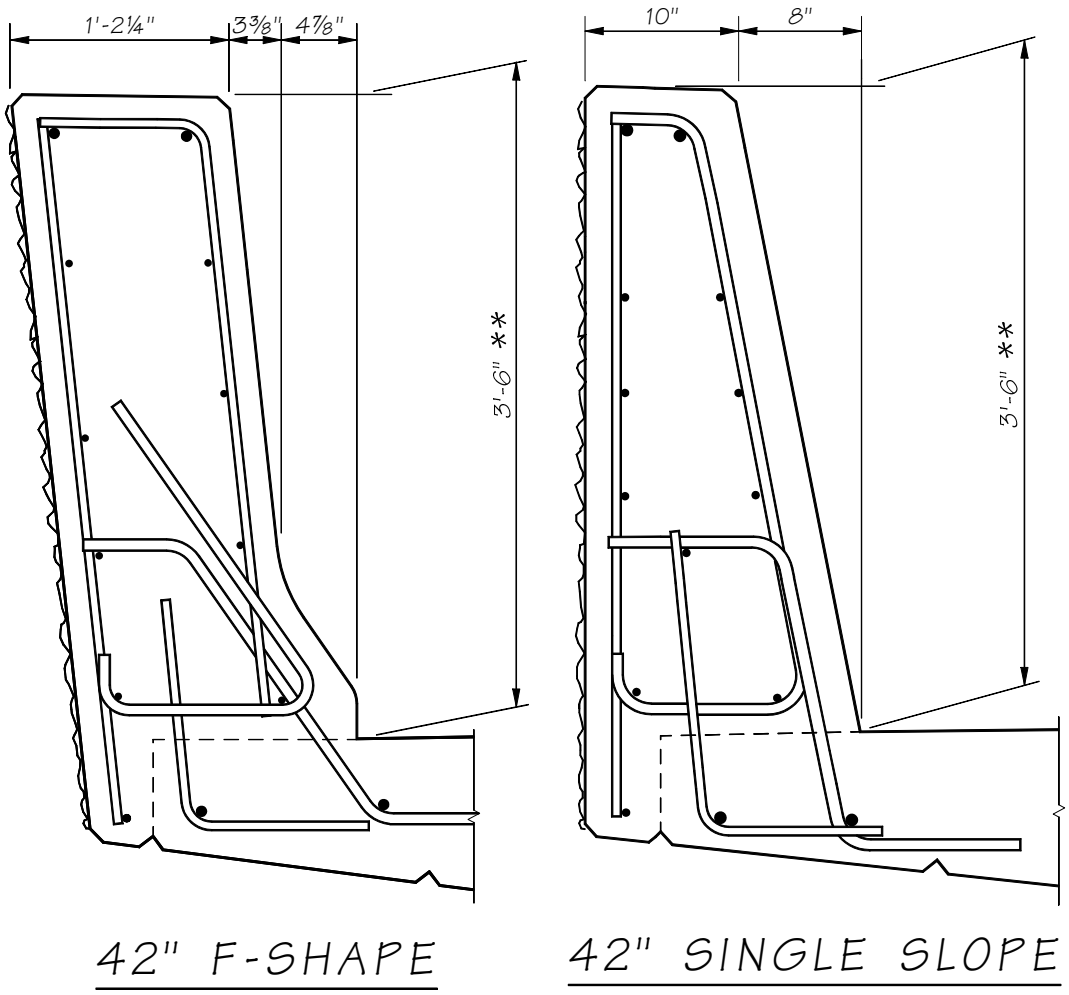

Figure 10.2.3-4

10.2.4 Design Criteria

A. Design Values

AASHTO LRFD Appendix A13 shall be used to design bridge traffic barriers and their supporting elements (i.e. the deck).

Concrete traffic barriers shall be designed using yield line analysis as described in AASHTO LRFD A13.3.1. WSDOT Standard F Shape and Single Slope barriers meet these requirements.

Deck overhangs supporting traffic barriers shall be designed per AASHTO LRFD A13.4. For concrete traffic barriers in Design Case 1, AASHTO requires M_S, the deck overhang flexural resistance, to be greater than M_c of the concrete traffic barrier base. This requirement is consistent with yield line analysis (see AASHTO LRFD CA13.3.1), but results in overconservative deck overhang designs.

In order to prevent this unnecessary overdesign of the deck overhang, the nominal traffic barrier resistance to transverse load R_W (AASHTO LRFD Bridge Design Specifications A13.3.1) transferred from the traffic barrier to deck overhang shall not exceed 120% of the design force F_t (AASHTO LFRD Table A13.2-1) required for a traffic barrier.

The deck overhang shall be designed in accordance with the requirements of AASHTO LRFD A13.4.2 to provide a flexural resistance M_s, acting coincident with the tensile force T. At the inside face of the barrier M_s may be taken as:

for an interior barrier segment - $M_s = \frac{R_w \cdot H}{L_C + 2 \cdot H}$

and for an end barrier segment - $M_s = \frac{R_w \cdot H}{L_C + H}$

However, M_s need not be taken greater than M_c at the base. T shall be taken as:

for an interior barrier segment - $T = \frac{R_w}{L_C + 2 \cdot H}$

and for an end barrier segment - $T = \frac{R_w}{L_C + H}$

The barrier impact design forces transmitted to the deck overhang, not including the dead loads of the traffic barrier and the slab, shall be taken as:

When an HMA overlay is required for initial construction, increase the weight for Shape F traffic barrier. See Section 10.2.4.C for details.

B. Geometry

Standard WSDOT traffic barriers have been crash tested and shall not be significantly modified unless they are retested to NCHRP 350 or approved by the FHWA as described in Chapter 13 of the AASHTO Specifications. The traffic face geometry is part of the crash test and shall not be modified. Contact the WSDOT Bridge and Structure's Traffic Barrier Specialist for further guidance.

Thickening of the traffic barrier is permissible for architectural reasons. Concrete clear cover must meet minimum concrete cover requirements but can be increased to accommodate rustication grooves or patterns.

C. Standard Detail Sheet Modifications

When designing and detailing a bridge traffic barrier on a superelevated bridge deck the following guidelines shall be used:

- For bridge decks with a superelevation of 8% or less, the traffic barriers (and the median barrier, if any) shall be oriented perpendicular to the bridge deck.
- For bridge decks with a superelevation of more than 8%, the traffic barrier on the low side of the bridge (and median barrier, if any) shall be oriented perpendicular to an 8% superelevated bridge deck. For this situation, the traffic barrier on the high side of the bridge shall be oriented perpendicular to the bridge deck.

The standard detail sheets are generic and may need to be modified for each project. The permissible modifications are:

- Removal of the electrical conduit, junction box, and deflection fitting details.
- Removal of design notes.
- If the traffic barrier does not continue on to a wall, remove W1 and W2 rebar references.
- Removal of the non-applicable guardrail end connection details and verbiage.
- If guardrail is attached to the traffic barrier use either the thrie beam design "F" detail or the W-beam design "F" detail.

Barrier Impact Design Forces on Traffic Barrier & Deck Overhang									
Parameters		Type F 32 in.		Single Slope 34 in.		Type F 42 in.		Single Slope 42 in.	
		Interior	End*	Interior	End*	Interior	End*	Interior	End*
Traffic Barrier Design	Average M_c (ft-kips/ft)	20.62	20.62	19.39	19.39	29.18	29.18	25.22	25.22
	M_c at Base (ft-kips/ft)	27.24	27.24	26.11	26.11	37.00	37.00	34.52	34.52
	M_w (ft-kips)	42.48	45.98	44.72	42.17	97.83	96.91	83.87	79.14
	L_c (ft)	8.61	4.75	9.19	4.79	14.48	9.26	14.45	9.19
	R_w (kips)	133.09	73.48	125.79	65.53	241.47	154.33	208.16	132.49
	F_t (kips)	54.00	54.00	54.00	54.00	124.00	124.00	124.00	124.00
Deck Overhang Design	$1.2*F_t$ (kips)	64.80	64.80	64.80	64.80	148.80	148.80	148.80	148.80
	Design R_w (kips)	64.80	64.80	64.80	64.80	148.80	148.80	148.80	132.49
	$R_w*H/(L_c+aH)$ (ft-kips/ft)**	12.40	23.29	12.36	24.09	24.24	40.83	24.28	36.53
	Design M_s (ft-kips/ft)	12.40	23.29	12.36	24.09	24.24	37.00	24.28	34.52
	Design T (kips/ft)	4.65	8.74	4.36	8.50	6.93	11.67	6.94	10.44
Deck to Barrier Reinforcement	A_s required (in^2/ft)	0.29	0.56	0.29	0.58	0.44	0.68	0.50	0.72
	A_s provided (in^2/ft)	0.41	0.62	0.41	0.62	0.66	0.75	0.66	0.75
	S_1 Bars	#5 @ 9 in	#5 @ 6 in	#5 @ 9 in	#5 @ 6 in	#6 @ 8 in	#6 @ 7 in	#6 @ 8 in	#6 @ 7 in

*Traffic barrier cross sectional dimensions and reinforcement used for calculation of end segment parameters are the same as interior segments. Parameters for modified end segments shall be calculated per AASHTO-LRFD article A13.3, A13.4, and the WSDOT BDM/

**a = 1 for an end segment and 2 for an interior segment

Loads are based on vehicle impact only. For deck overhang design, the designer must also check other limit states per LRFD A13.4.1.

f_v = 60 ksi

f'_c = 4 ksi

Table 10.2.4-1

If the traffic barrier continues off the bridge, approach slab, or wall, remove the following:

- Guardrail details from all sheets
- Conduit end flare detail
- Modified end section detail and R1A or R2A rebar details from all sheets
- End section bevel
- Increase the 3” toe dimension of the Shape F traffic barriers up to 6” to accommodate HMA overlays.

D. Miscellaneous Design Information

- Show the back of Pavement Seat in the “Plan – Traffic Barrier” detail.
- At roadway expansion joints, show traffic barrier joints normal to centerline except as shown on sheets in Chapter 9 Appendix 9.1-A1 and A2.
- When an overlay is required the 2’-8” minimum dimension shown in the “Typical Section – Traffic Barrier” shall be referenced to the top of the overlay.
- When bridge lighting is part of the contract include the lighting bracket anchorage detail sheet.
- Approximate quantities for the Traffic barrier sheets are:

Barrier Type	Concrete Weight (lb/ft)	Steel Weight (lb/ft)
32' F-shape (3" toe)	470	18.6
32' F-shape (6" toe)	525	19.1
34' Single Slope	505	16.1
42' F-shape (3" toe)	730	27.4
42' F-shape (6" toe)	790	27.9
42' Single Slope	690	24.0
32' Single Slope	658*	14.7
Using concrete class 4000 with a unit weight of 160 lb/ft3 * with 6" sidewalk, will vary with sidewalk thickness		

- Steel Reinforcement Bars:

  S_1 & S_2 or S_3 & S_4 and W_1 & W_2 bars (if used) shall be included in the Bar List.

10.3 At Grade Traffic Barriers

10.3.1 Median Barriers

The top of the median traffic barrier shall have a minimum width of 6". If a luminaire or sign is to be mounted on top of the median traffic barrier, then the width shall be increased to accommodate the mounting plate and 6" of clear distance on each side of the luminaire or sign pole. The transition flare rate shall follow the WSDOT Design manual.

A. Differential Grade Median Barriers

Cast-in-place (CIP) barriers at grade are sometimes required in median areas with different roadway elevations on each side. The Single Slope traffic barrier can be used for a difference in grade of up to 10". See WSDOT Standard Plan C-14a for details.

If the difference in grade elevations is between 10" and 4'-0" then the barrier shall be designed using AASHTO LFD barrier loading with the following requirements:

1. The differential grade traffic barrier shall be designed to 10 kips, as a minimum loading.
2. For soil loads without traffic impact, the barrier shall be designed as a combination of a standard retaining wall (barrier weight resists overturning and sliding) and a cantilever retaining wall (passive soil resistance resists overturning and sliding) using the factors of safety for retaining walls found in the BDM. Earthquake Group VII loads need not be considered.
3. Traffic impact loads shall be added to the side of the barrier retaining soil.
4. For soil loads with traffic impact, the barrier shall be designed as a combination of a standard retaining wall (barrier weight resists overturning and sliding) and a cantilever retaining wall (passive soil resistance resists overturning and sliding). The design shall be based on stability requirements for overturning with a factor of safety $M_R / M_O \geq 1.3$ and sliding $F_S / F_R \geq 1.3$.
5. To meet the stability requirements of item 4, several feet of barrier length are required. The length of the barrier required for stability shall be no more than 10 times the overall height. The barrier shall be designed for lateral bending over this length assuming it acts as a beam on an elastic foundation for this length with a 10K point load. The barrier shall also be designed for torsion from the moment induced by the 10K load about the barrier c.g.
6. A special impact analysis shall be performed at the barrier ends if the barrier terminates without being connected to a rigid object or dowelled to another barrier. Differential barrier deflection from traffic impact may cause a vehicle to "snag" on the undeflected barrier. The barrier depth may need to be increased at the end to prevent this deflection.
7. The differential grade traffic barrier shall have dummy joints at 8 to 12 foot centers based on project requirements.
8. Full depth expansion joints with shear dowels at the top will be required at intervals based on analysis but not to exceed a 120'-0" maximum spacing.

Median traffic barriers with a grade difference greater that 4'-0" shall be designed as standard plan retaining walls with a traffic barrier at the top and a barrier shape at the cut face.

10.3.2 Shoulder Barriers

At grade CIP shoulder barriers are sometimes used adjacent to bridge sidewalk barriers in lieu of standard precast Type 2 barriers. This barrier cross section has an equivalent mass and resisting moment for stability as the embedded double-face New Jersey Traffic Barrier which has been satisfactorily crash tested. A wire rope and pin connection shall be made at the bridge barrier end section per Standard Plan C-8. If a connection is made to an existing traffic barrier or parapet on the bridge, 15-inch long holes shall be drilled for the wire rope connection and shall be filled with an epoxy bonding agent.

10.3.3 Traffic Barrier Moment Slab

A. General Guidelines

Traffic barrier moment slabs that are placed on Structural Earth (SE) walls are part of the propriety wall design and shall be design by the SE wall manufacturers. The SE wall manufacturers will be allowed to design the traffic barrier moment slabs using either the LRFD or the LFD code.

B. Design Guidelines

The traffic barrier moment slab system for non-propriety walls, Geosynthetic, and for at-grade applications shall be designed in accordance with AASHTO LRFD Section 11.10.10.2 and Section 13. The design requirements are as follows:

1. Parapets and traffic barriers shall satisfy crash testing requirements as specified in Section 13. The traffic barrier portion of the moment slab shall be designed by the yield line method of analysis with the assumption that the barrier is mounted on a rigid surface or use a crash tested barrier. Traffic barrier to slab connection shall be designed with the requirement of Strength Limit State with a minimum transverse force of $1.2F_T$ as specified in AASHTO LRFD Table A13.2-1.
2. The moment slab shall be strong enough to resist the ultimate strength of the standard traffic barrier parapet.
3. The traffic barrier moment slab system shall be designed to the Extreme Event-II limit state and use Test Level 4 as a minimum loading. The yield line analysis of LRFD A13.3.1 is NOT applicable to traffic barrier moment slab system. The system shall be analyzed as beam on elastic foundation to determine the length of barrier resisting the collision force and designed to resist overturning moments, sliding, and bearing capacity by their own mass plus the mass of the soil and pavement above the anchoring slab. The traffic barrier moment slab system shall not directly transmit loads to the top of the wall facing panels.
    a. The traffic barrier shall have dummy joints at 8 to 12 foot centers base on project requirements of wall panel widths. Full depth expansion joints with shear pins or dowels will be required at the minimum intervals based on the stability analysis with a 120’-0” maximum spacing.
4. The generic Extreme Event-II limit state soil parameters for structural fill under ultimate failure conditions are as follows:
    - Extreme Event soil total horizontal shear resistance: Q_R = 1 KSF
    - Extreme Event soil bearing resistance: q_{ult} = 2 KSF

    These values may be used to extract soil spring coefficients in longitudinal, transverse, and vertical directions for moment slab barriers on structural earth wall systems or at grade applications. The Geotechnical Engineer may provide alternate values in the Geotechnical Report.

10.3.4 Precast Traffic Barrier

A. Concrete Barrier Type 2

"Concrete Barrier Type 2" (see WSDOT Standard Plan C-8) may be used on bridges for median applications or for temporary traffic control based on the following guidelines:

1. For temporary applications, no anchorage is required if there is 2 feet or greater slide distance between the back of the traffic barrier and an object and 3 feet or greater to the edge of the bridge deck or a severe drop off (see WSDOT Design Manual Section 710).
2. For permanent applications in the median, no anchorage will be required if there is 2 feet or greater slide distance between the traffic barrier and the traffic lane.
3. For temporary applications, the traffic barrier shall not be placed closer than 9 inches or 6 inches to the edge of a bridge deck or substantial drop-off and shall be anchored (see WSDOT Standard Plans K-80.35-00 and K-80.37-00).
4. The traffic barrier shall not be used to retain soil that is sloped or greater than the barrier height or soil that supports a traffic surcharge.

B. Concrete Barrier Type 4 and Alternative Temporary Concrete Barrier

"Concrete Barrier Type 4 (see the WSDOT Standard Plan C-8a), is not a free standing traffic barrier. This barrier shall be placed against a rigid vertical surface that is at least as tall as the traffic barrier. In addition, Alternative Temporary Concrete Barrier Type 4 – Narrow Base (WSDOT Standard Plan K-80.30-00) shall be anchored to the bridge deck as shown in WSDOT Standard Plan K-80.37-00. The "Concrete Barrier Type 4 and Alternative Temporary Concrete Barrier" are not designed for soil retention.

10.4 Bridge Traffic Barrier Rehabilitation

10.4.1 Policy

The bridge traffic barrier retrofit policy is: "to systematically improve or replace existing deficient rails within the limits of roadway resurfacing projects". This is accomplished by:

- Utilizing an approved crash tested rail system that is appropriate for the site or
- Designing a traffic barrier system to the strength requirements set forth by Section 2 of AASHTO Standard Specifications for Highway Bridges, 17th edition."

10.4.2 Guidelines

A strength and geometric review is required for all bridge rail rehabilitation projects. If the strength of the existing bridge rail is unable to resist an impact of 10 kips or has not been crash tested, then modifications or replacement will be required to improve its redirectional characteristics and strength. Bridges that have deficient bridge traffic barriers were designed to older codes. The AASHTO LFD load of 10 kips shall be used in the retrofit of existing traffic barrier systems constructed prior to the year 2000. The use of the AASHTO LRFD criteria to design traffic barrier rehabs will result in a bridge deck that has insufficient reinforcement to resist moment from a traffic barrier impact load and will increase the retrofit cost due to expensive deck modifications.

10.4.3 Design Criteria

Standard thrie beam guardrail post spacing is 6'- 3" except for the SL-1 Weak Post, which is at 8'- 4". Post spacing can be increased up to 10'- 0" if the thrie beam guardrail is nested (doubled up).

Gaps in the guardrail are not allowed because they produce snagging hazards. The exceptions to this are:

- Movable bridges at the expansion joints of the movable sections.
- At traffic gates and drop down net barriers.
- At stairways.

Design F guardrail end sections will be used at the approach and trailing end of these gaps.

For Bridge Traffic Barrier Rehabilitation the following information will be needed from the Region Design office:

- Bridge Site Data Rehabilitation Sheet – Form # 235-002A.
- Photos, preferably digital Jpegs.
- Layout with existing dimensions.
- Measurements of existing ACP to top of curb at the four corners of the bridge as a minimum.
- Location of Type 3 anchors, if present.
- The proposed overlay type, quantities of removal and placement.
- For timber bridges, the field measurement of the distance from the edge of bridge deck to the first and second stringer is required for mounting plate design.

Placement of the retrofit system will be determined from the WSDOT Highway Design Manual, Figure 710.15. Exceptions to this are bridges with sidewalk strength problems, pedestrian access issues, or vehicle snagging problems.

10.4.4 WSDOT Bridge Inventory of Bridge Rails

The WSDOT Bridge Preservation office maintains an inventory of all bridges in the state on the State of Washington Inventory of Bridges.

Concrete balusters are deficient for current lateral load capacity requirements. They have approximately 3 kips of capacity whereas 10 kips is required.

The combination high-base concrete parapet and metal rail may or may not be considered adequate depending upon the rail type. The metal rail Type R, S, and SB attached to the top of the high-base parapet are considered capable of resisting the required 5 kips of lateral load. Types 3, 1B, and 3A are considered inadequate. See the WSDOT Highway Design Manual, Section 710 for replacement criteria.

10.4.5 Available Retrofit Designs

A. Washington Thrie Beam Retrofit of Concrete Balusters

This system consists of thrie beam guardrail stiffening of existing concrete baluster rails with timber blockouts. The Southwest Research Institute conducted full-scale crash tests of this retrofit in 1987. Results of the tests were satisfactory and complied with criteria for a Test Level 2 (TL2) category in the Guide Specifications. For complete details see Appendix 10.4-A1-1.

B. New York Thrie Beam Guardrail

This crash tested rail system can be utilized at the top of a raised concrete sidewalk to separate pedestrian traffic from the vehicular traffic or can be mounted directly to the top of the concrete deck. For complete details see Thrie Beam Retrofit Concrete Curb in Appendix 10.4-A1-3.

C. Concrete Parapet Retrofit

This is similar to the New York system. For complete details see Appendix 10.4-A1-2.

D. SL-1 Weak Post

This design has been utilized on some short concrete spans and timber bridges. A failure mechanism is built into this rail system so that upon impact with a 2 kip load the post will break away from the mounting bracket without damaging the bridge deck. The thrie beam guardrail will contain the vehicle by virtue of its ribbon strength. This failure mechanism assures minimal damage to the bridge deck and stringers. For complete details see Appendix 10.4-A1-4.

10.4.6 Available Replacement Designs

A. Traffic Barrier – Shape F Retrofit

This is WSDOT's preferred replacement of deficient traffic barriers and parapets on high volume highways with a large truck percentage. All interstate highway bridges shall use this type of barrier unless special conditions apply. For complete details see Appendix 10.4-A2.

10.5 Bridge Railing

10.5.1 Design

WSDOT pedestrian and bike/pedestrian railings are design in accordance with Chapter 13 in the AASHTO LRFD Bridge Design Specifications.

10.5.2 Railing Types

1. Bridge Railing Type Pedestrian

   This pedestrian railing is designed to sit on top of the 32" and 34" traffic barriers and to meet pedestrian height requirements of 42". For complete details see Appendix 10.5-A1.

2. Bridge Railing Type BP and S-BP

   These railings are designed to meet the minimum bicycle height requirements of 54", and sit on top of the 32" and 34" traffic barriers. The AASHTO LRFD Bridge Design Specifications calls for a minimum of 42" but WSDOT requires a minimum height of 54".

   There are two versions – the BP and S-BP. The BP is the standard railing and is made out of aluminum. The S-BP is the steel version designed for use in rural areas because of aluminum theft. For complete details see Appendix 10.5-A2 and A3.

3. Pedestrian Railing

   This railing is designed to sit on top of a six-inch curb on the exterior of a bridge sidewalk. It meets the bicycle height requirements of 54". For complete details see Appendix 10.5-A4.

4. Bridge Railing Type Chain Link Snow Fence

   This is designed to minimize plowed snow from falling off the bridge on to traffic below. For complete details see Appendix 10.5-A5.

10.6 Bridge Approach Slabs

Bridge approaches typically experience two types of settlement, global and local. Global settlement is consolidation of the deeper natural foundation soils. Local settlement is mainly compression of fill materials directly beneath the approach pavement due to construction. The combination of global and local settlements adjacent to the bridge end piers form the characteristic "bump" in the pavement at the bridge. The approach slab significantly reduces local settlement and will provide a transition to the long term roadway differential settlements. Generally, abutments with a deep foundation will have greater differential roadway settlements than spread footing foundations.

When are Approach Slabs Required?

Bridge approach slabs are required for all new and widened bridges, except when concurrence is reached between the Geotechnical Branch, the Region Design Project Engineer Office, and the Bridge and Structures Office, that approach slabs are not appropriate for a particular site. In accordance with WSDOT *Design Manual* Chapter 1120, the State Geotechnical Engineer will include a recommendation in the Geotechnical Report for a bridge on whether or not bridge approach slabs should be used at the bridge site. Factors considered while evaluating the need for bridge approach slabs include the amount of expected settlement and the type of bridge structure.

***Standard Plan* A-2**

The *Standard Plan* A-2 is available for the Local Agencies (or others) to use or reference in a contract. Bridge and Structures Office designs for local agency projects may reference *Standard Plan* A-2. However, detailed information in a customized approach slab Plan View is preferred.

Bridge Runoff

Bridge runoff at the abutments shall be carried off and collected at least 10 feet beyond the bridge approach slab. Drainage structures such as grate inlets and catch basins shall be located in accordance with *Standard Plan* A-4 and the recommendations of the Hydraulics Office.

Approach Pay Item

All costs in connection with constructing bridge approach slabs are included in the unit contract price per square yard for "Bridge Approach Slab". The pay item includes steel reinforcing bars, approach slab anchors, concrete, and compression seals. For the Contractor's information, the total quantity of epoxy-coated and plain steel reinforcing bars (lbs), concrete (SY), and miscellaneous items shall be listed in the bar list sheet for each bridge.

10.6.1 Notes to Region for Preliminary Plan

All bridge preliminary plans shall show approach slabs at the ends of the bridges. In the Notes to Region in the first submittal of the Preliminary Plan to the Region, the designer shall ask the following questions:

1. Bridge approach slabs are shown for this bridge, and will be included in the Bridge PS&E. Do you concur?
2. The approach ends of the bridge approach slabs are shown (a) parallel to the back of pavement seat (b) normal to the survey line (the designer shall propose one alternative). Do you concur?
3. Please indicate the pavement type for the approach roadway.

Depending on the type and number of other roadway features present at the bridge site (such as approach curbs and barriers, drainage structures, sidewalks, utilities and conduit pipes) or special construction requirements such as staged construction, other questions in the Notes to Region pertaining to the bridge approach slabs may be appropriate.

Special staging conditions exist when the abutment skew is greater than 30 degrees and for wide roadway widths. This includes bridge widenings with (or without) existing bridge approach slabs. The preliminary plan should include details showing how these conditions are being addressed for the bridge approach slabs, and the designer shall include appropriate questions in the Notes to Region asking for concurrence with the proposed design.

10.6.2 Approach Slab Design and Detailing

All bridge preliminary plans shall show approach slabs at the ends of the bridges. In the Notes to Region in the first submittal of the Preliminary Plan to the Region, the designer shall ask the following questions:

1. The bridge approach slab is designed as a slab in accordance with AASHTO LRFD. (Strength Limit State, IM = 1.33, no skew).
2. The support at the roadway end is assumed to be a uniform soil reaction with a bearing length that is approximately ⅓ the length of the approach slab, or 25ft /3 = 8 feet.
3. The Effective Span Length (S_{eff}), regardless of approach length, is assumed to be:

   25 foot approach - 8 feet/2 to CL soil support - 10 inch seat width = 20 feet
4. Longitudinal reinforcing bars do not require modification for skewed approaches or slab lengths greater than 25 feet.
5. BDM Section 7.4.3, Abutment Loading, provides slab reactions without a dynamic allowance (IM). A dynamic allowance, IM = 1.33, should be applied to the design of a pavement seat.
6. The maximum skew accommodated detailed in the standard sheets is 30 degrees.

10.6.3 Approach Expansion Joints

For semi-integral abutments or stub abutments, the Bridge Designer must check the joint design to make sure the movement of the standard joint is not exceeded. In general, the approach slab is assumed to be stationary and the joint gap is designed to vary with the bridge movement. The BDM Approach Slab Sheet 10.6-A1.2 and *Standard Plan* A-2 detail a small compression seal with a 1⅝ inch installed gap. Bridges with large expansion movements or highly skewed joints may require compression seals larger than the standard joint and are not recommended. If a larger seal is required, the approach seat should also be larger.

Approach slab anchors installed at bridge abutments should be as shown in the Bridge Plans. For bridges with semi-integral type abutments, this can be accomplished by showing the approach slab anchors in the End Diaphragm or Pavement Seat details.

L type abutments

L type abutments do not require expansion joints or approach anchors because the abutment and approach slab are both considered stationary. A pinned connection is preferred. The L TYPE ABUTMENT ANCHOR detail, as shown below, must be added to the abutment Plan Sheets. The pinned anchor for bridges with L type abutments shall be a #5 bar at one foot spacing, bent as shown, with 1’-0” embedment into both the pier and the bridge approach slab. This bar shall be included in the bar list for the bridge substructure.

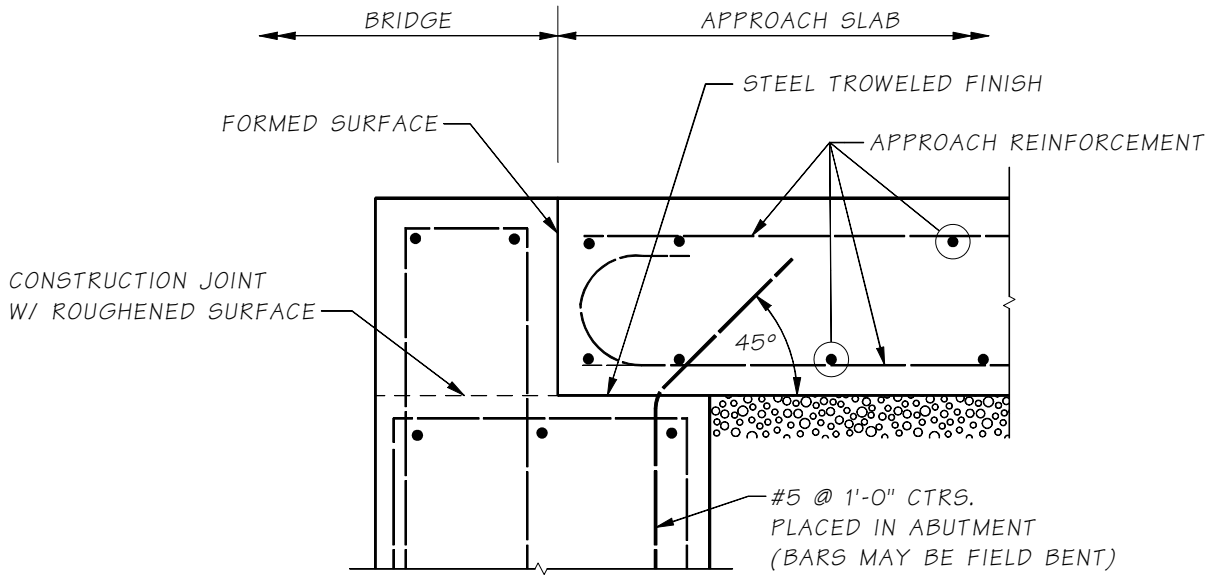

L Type Abutment Anchor Detail
Figure 10.6.3-1

10.6.4 Skewed Approach Slabs

For all skewed abutments, the roadway end of the bridge approach slab shall be normal to the roadway centerline.

The Bridge Supervisor should be consulted when approach slab skew is greater than 30 degrees or significantly wide (three lanes or more). These conditions will vary the required approach slab length. The roadway end of the approach may be stepped or staggered to reduce the size or to accommodate staging construction widths.

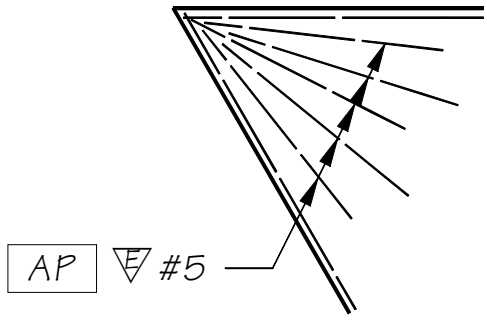

Flared Corner Steel
Figure 10.6.4-1

In addition, for bridges with skews greater than 30 degrees additional steel reinforcing bars shall be added to the acute corners of the bridge approach slabs. Typical placement is shown in the FLARED CORNER STEEL detail. The flared corner steel should be #5 rebar, 10 feet long, epoxy coated, and placed on top of the top layer of steel.

10.6.5 Bridge Approach Approach Detailing

The bridge approach slab and length along center line of project shall be shown in the Plan View of the Bridge Layout sheet. The Bridge Plans will also include approach slab information as shown on Appendix 10.6-A1-1 and 10.6-A1-2. The Approach Slab Plan sheets should be modified as appropriate to match the bridge site conditions. Generally, both anchor types shown on the second sheet are not used on the bridge. The anchor not used should be deleted.

Additional details may be required to address special roadway features and construction requirements such as: roadway curbs and barriers, sidewalks, utilities and conduits and staging. This means, if sidewalks and interior barriers (such as traffic-pedestrian barriers) are present, special details will be required in the Bridge Plans to show how the sidewalks and interior barriers are connected to and constructed upon the bridge approach slab.

10.6.6 Pavement Seats on Existing Bridges

When approach slabs are added to existing bridges, the pavement seats may require modification. If the existing pavement seat is less than 10 inches, the seat shall be replaced with an acceptable, wider pavement seat. The Bridge Design Engineer may modify this requirement on a site-specific basis. Generic pavement seat repair details are shown in the Appendix 10.6-A2-1 for a concrete repair and Appendix 10.6-A2-2 for a steel T-section repair. These sheets can be customized for the project and added to the Bridge Plans.

10.7 Traffic Barrier on Approach Slabs

Placing the traffic barrier on the approach slab is beneficial for the following reasons.

- The approach slab resists traffic impact loads and may reduce wing wall thickness
- Simplified construction and conduit placement
- Bridge runoff is diverted away from the abutment

Most bridges will have some long-term differential settlement between the approach roadway and the abutment. Therefore, a gap between the approach slab and wing (or wall) should be shown in the details. The minimum gap is twice the long-term settlement, or 2 inches. A 3 inch gap is also acceptable as shown in Figure 10.7-1.

When the traffic barrier is placed on the approach slab, the following barrier guidelines apply.

- Barrier should extend to the end of the approach slab
- Conduit deflection or expansion fittings must be called out at the joints
- Junction box locations should start and end in the approach
- The transverse top reinforcing in the slab meets the minimum steel requirements. This is not enough reinforcement to resist barrier collision forces. Therefore, a 6'-0" (hooked) #6 epoxy coated bar should be added to the approach slab as shown in Figure 10.7-1.

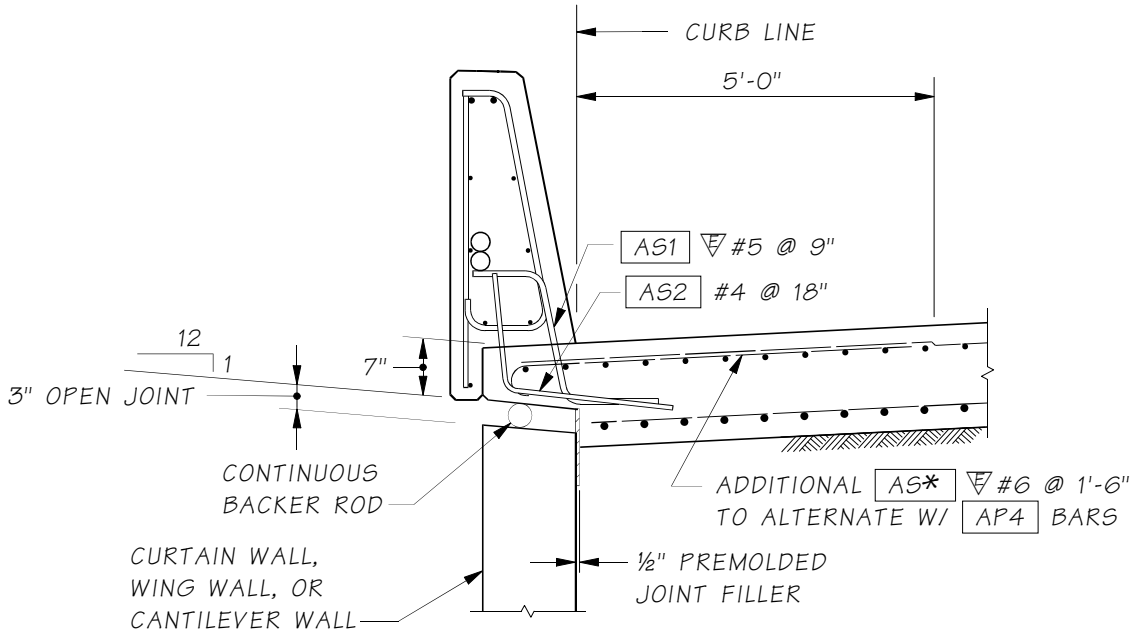

Figure 10.7-1

10.7.1 Approach Slab over Wing Walls, Cantilever Walls or Geosynthetic Walls

All walls that are cast-in-place below the approach slab should continue the barrier soffit line to grade. This includes geosynthetic walls that have a cast-in-place fascia. Figure 10.7.1-1 shows a generic layout at an abutment. Note the sectional Gap Detail, Figure 10.7.1-1 applies.

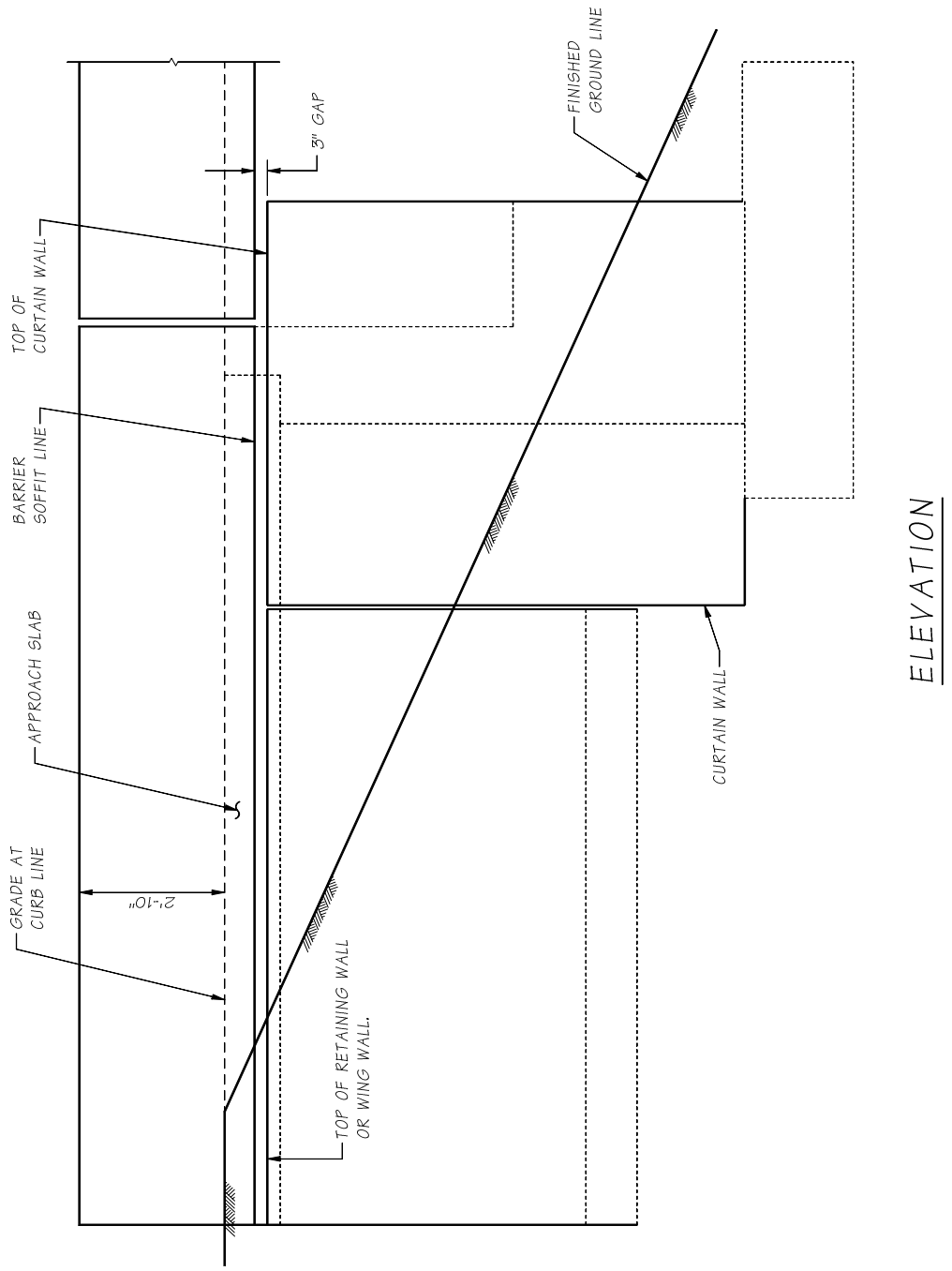

Figure 10.7.1-1

10.7.2 Approach Slab over SE Walls

The tops of Structure Earth (SE) walls are uneven and must be covered with a fascia to provide a smooth soffit line. Usually SE walls extend well beyond the end of the approach slab and require a moment slab. Since SEW barrier is typically 5'-0" deep from the top of the barrier, the soffit of the SEW barrier and bridge barrier do not match. The transition point for the soffit line should be at the bridge expansion joint as shown in Figure 10.7.2-2. This requires an extended back side of the barrier at the approach slab to cover the uneven top of the SE wall.

Battered wall systems, such as block walls, use a thickened section of the curtain wall to hide some of the batter. The State Bridge and Structures Architect will provide dimensions for this transition when required.

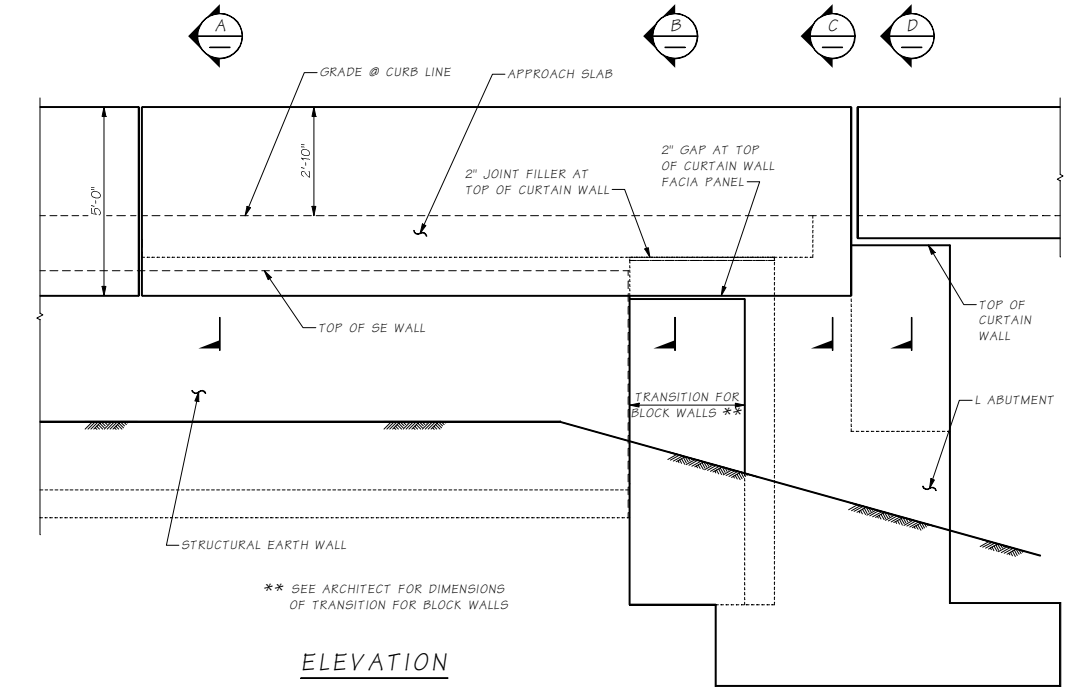

Figure 10.7.2-1

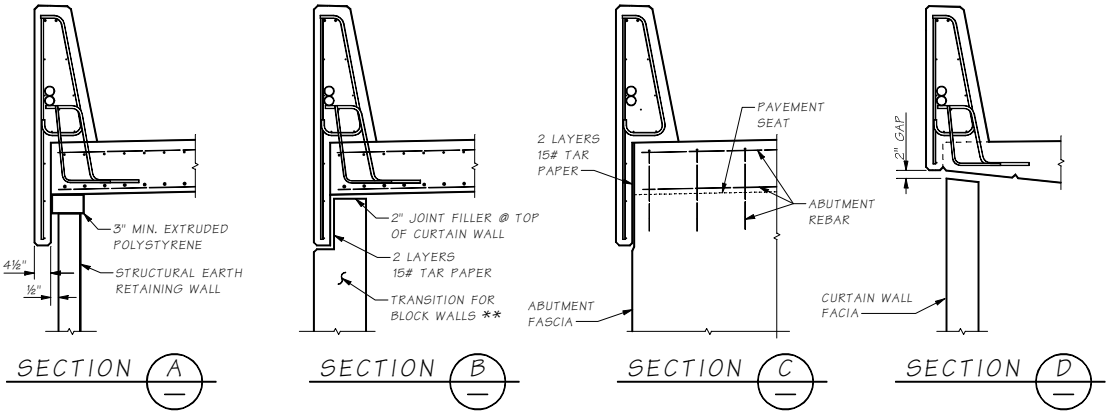

Figure 10.7.2-2

10.8 Utilities Installed with New Construction

10.8.1 General Concepts

The utilities to be considered under this section are electrical (power and communications) volatile fluids (gas), water, and sewer/storm water pipes. The Bridge designer shall determine if the utility may be attached to the structure and the location. Bridge plans shall include all hardware specifications and details for the utility attachment as provided in any written correspondence with the utility.

The Specifications Engineer will contact the Region Utility Engineer for additional design or construction requirements that may be stipulated in the utility agreement.

Responsibilities of the Utility Company

The Region or utility company will initiate utility installations and provide design information. The utility company shall be responsible for calculating design stresses in the utility and design of the support system. Utility support design calculations with, a State of Washington Profession Engineer stamp, shall be submitted to the Bridge and Structures Office for review. The following information shall be provided by the Utility Company and shown in the final Bridge Plans.

- Location of the utility outside the limits of the bridge structure
- Number of utilities, type, size, and weight (or Class) of utility lines
- Utility minimum bending radius for the conduit or pipeline specified

Utility General Notes and Design Criteria are stated in DOT Form 224-047 "General Notes and Design Criteria for Utility Installations". This form outlines most of the general information required by the Utility Company to design their attachments. The Bridge Office will generally provide the design for lightweight hanger systems, such as electrical conduits, attached to new structures.

Confined Spaces

A confined space is any place having a limited means of exit that is subject to the accumulation of toxic or flammable contaminants or an oxygen deficient environment. Confined spaces include but are not limited to pontoons, box girder bridges, storage tanks, ventilation or exhaust ducts, utility vaults, tunnels, pipelines, and open-topped spaces more than 4 feet in depth such as pits, tubes, vaults, and vessels. The designer should provide for the following:

- A sign with "Confined Space Authorized Personnel Only."
- In the "Special Provisions Check List," alert and/or indicate that a special provision might be needed to cover confined spaces.

Coating and Corrosion Protection

When the bridge is to receive pigmented sealer, consideration shall be given to painting any exposed utility lines and hangers to match the bridge. When a pigmented sealer is not required, steel utility conduits and hangers shall be painted or galvanized for corrosion protection. The special provisions shall specify cleaning and painting procedures.

10.8.2 Utility Design Criteria

All utilities shall be designed to resist Strength and Extreme Event Limits States. This includes and not limited to dead load, expansion, surge, and earthquake forces. Designers should review DOT Form 224-047 "General Notes and Design Criteria" and the items in this section when designing a utility system or providing a review for an existing bridge attachment.

The Bridge Engineer shall review the utility design to ensure the utility support system will carry all transverse and vertical loading. Loading will include (and is not limited to): Dead Load, Temperature expansion, dynamic action (water hammer), and Seismic inertial load.

Utility Location

Utilities should be located, if possible, such that a support failure will not result in damage to the bridge, the surrounding area, or be a hazard to traffic. In most cases, the utility is installed between girders. Utilities and supports must not extend below the bottom of the superstructure. Utilities shall be installed no lower than 1 foot 0 inches above the bottom of the girders. In some cases when appurtenances are required (such as air release valves), care should be taken to provide adequate space. The utility installation shall be located so as to minimize the effect on the appearance of the structure. Utilities shall not be attached above the bridge deck nor attached to the railings or posts.

Termination at the Bridge Ends

Utility conduit and encasements shall extend 10 feet minimum beyond the ends of the structure in order to reduce effects of embankment settlement on the utility and provide protection in case of future work involving excavation near the structure. This requirement shall be shown on the plans. Utilities off the bridge must be installed prior to paving of approaches. This should be stated in the Special Provisions.

Utility Expansion

The utilities shall be designed with a suitable expansion system as required to prevent longitudinal forces from being transferred to bridge members.

Water mains generally remain a constant temperature and are anchored in the ground at the abutments. However, the bridge will move with temperature changes and seismic forces. Pipe support systems must be designed to allow for the bridge movements. For short bridges, this generally means the bridge will move and the utility will not since it is anchored at the abutments. For long bridges that require pipe expansion joints, design must carefully locate pipe expansion joints and the corresponding longitudinal load-carrying support.

Electrical conduits that use PVC should have an expansion device for every 100 foot of pipe due to the higher coefficient of expansion. If more than two joints are specified, a cable or expansion limiting device is required to keep the ends from separating.

Gas Lines or Volatile Fluids

Pipelines carrying volatile fluids through a bridge superstructure shall be designed by the utility company in accordance with WAC 480-93, Gas Companies—Safety, and Minimum Federal Safety Standard, Title 49 Code of Federal Regulations (CFR) Section part 192. WAC 468-34-210, Pipelines—Encasement, describes when casing is required for carrying volatile fluids across structures. Generally, casing is not required for pipelines conveying natural gas per the requirements of WAC 468-34-210. If casing is required, then WAC 468-34-210 and WAC 480-93-115 shall be followed.

Water Lines

Water lines shall be galvanized steel pipe or ductile iron pipe. Transverse support or bracing shall be provided for all water lines to carry Strength and Extreme Event Lateral Loading. Fire control piping is a special case where unusual care must be taken to handle the inertial loads and associated deflections. Normally, the Hydraulic Section will also be involved in this case.

In box girders (closed cell), a rupture of a water line will generally flood a cell before emergency response can shut down the water main. This will be designed for as an Extreme Event II load case, where the weight of water is a dead load (DC). Additional weep holes or open grating should be considered to offset this Extreme Event (see Figure 10.8.3-1).

Sewer Lines

Normally, an appropriate encasement pipe is required for sewer lines on bridges. Sewer lines must meet the same design criteria as waterlines. See the utility agreement or the Hydraulic Section for types of sewer pipe material typically used.

Telephone and Power Conduit

Generally, telephone, television cable, and power conduit shall be galvanized steel pipe or a PVC pipe of a UL approved type and shall be Schedule 40 or heavier. Where such conduit is buried in concrete curbs or barriers or has continuous support, such support is considered to be adequate. Where hangers or brackets support conduit at intervals, the distance between supports shall be small enough to avoid excessive sag between supports. See Section 10.8.7, Pipe Supports. Generally, the conduit shall be designed to support the cable in bending without exceeding working stresses for the conduit material.

10.8.3 Box Girder Bridges

Internal illumination is required for steel box girder bridges, and appropriate conduit piper and fixtures shall be detailed as part of the bridge design. Girder cells with utilities must have access. Current practice for access is to locate hatches in the bottom flange. More than one hatch is usually required to access all sections of the cell in a bridge.

Access and ventilation shall always be provided in box girder cells containing gas lines.

Continuous Support and Concrete Pedestals

Special utilities (such as water or gas mains) in box girder bridges should use concrete pedestals. This allows the utility to be placed, inspected, and tested before the deck is cast. Concrete pedestals consist of concrete supports formed at suitable intervals and provided with some type of clamping device. A continuous support may be achieved by providing a ledge of concrete to support the conduit. Continuous supports should be avoided due to the very high cost and additional dead load to the structure.

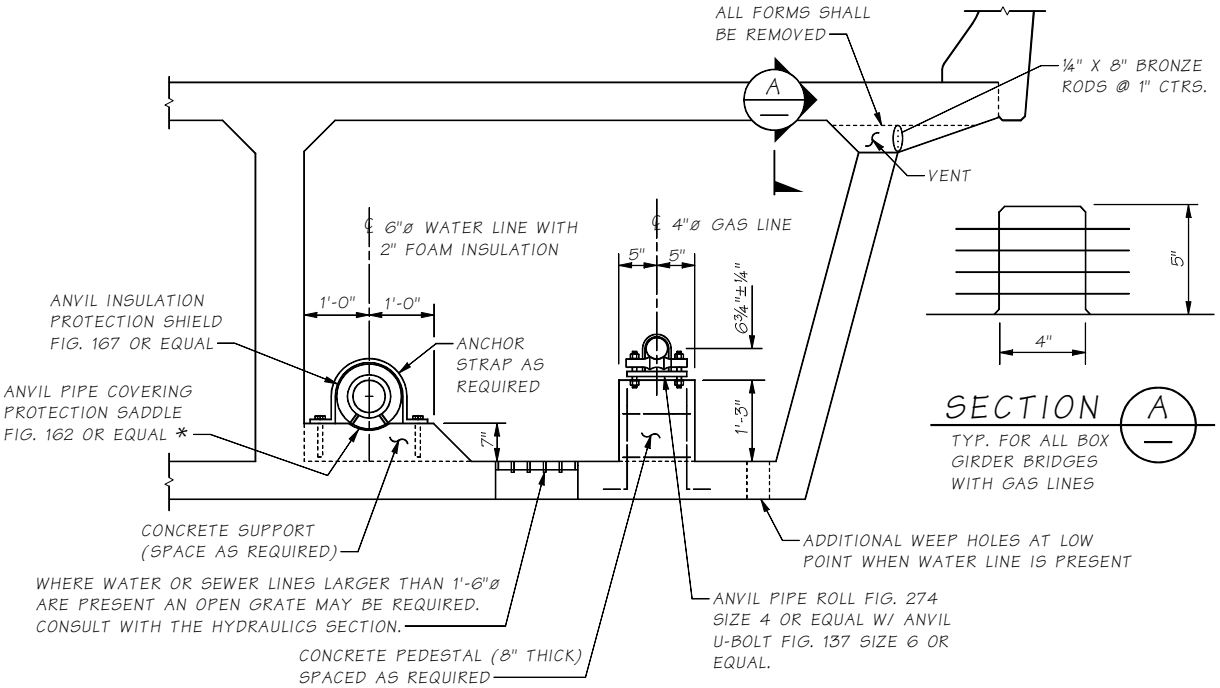

Figure 10.8.3-1

10.8.4 Traffic Barrier Conduit

All new bridge construction will install two (2) 2-inch galvanized steel conduits in the traffic barriers. These conduits generally carry wiring for Traffic Signals (TS) and Lighting (LT). Other wiring may be installed or the conduit may be used for future applications.

Conduits shall be stubbed-out at a concrete junction box provided in the Region Plans. The Bridge Plans must show the placement of the conduits to clear the structure or any foreseeable obstructions.

The galvanized steel conduit shall be wrapped with corrosion resistant tape at least one foot inside and outside of the concrete structure, and this requirement shall be so stated on the plans. The corrosion resistant tape shall be 3M Scotch 50, Bishop 5, Nashua AVI 10, or approved equal. The usual location of the conduit throughout the remainder of the bridge should be in the traffic barrier.

Pull boxes shall be provided at a maximum spacing of 180 feet. Their size shall conform to the specifications of the National Electric Code or be a minimum of 6 inches by 6 inches by 18 inches to facilitate pulling of wires. Galvanized steel pull boxes (or junctions boxes) shall meet the specifications of the "NEMA Type 4X" standard and shall be stated on the plans. Stainless steel pull boxes shall be allowed as an option to the galvanized steel.

In the case of existing bridges, an area 2 feet in width shall be reserved for conduit beginning at a point either 4 feet or 6 feet outside the face of usable shoulder. The fastening for and location of attaching the conduit to the existing bridge should be worked out on a job-by-job basis.

10.8.5 Conduit Types

All electrical conduits shall be Rigid Galvanized Steel (RGS) or PVC pipe, Schedule 40 or greater.

Steel Pipe

All steel pipe utility conduits shall be Schedule 40 or greater. All pipe and fittings shall be galvanized except for special uses.

PVC Pipe

PVC pipe may be used with suitable considerations for deflection, placement of expansion fittings, and of freezing water within the conduits. PVC pipe should not be placed in concrete traffic barriers due to damage and pipe separation that often occurs during concrete placement of slip formed barriers.

High Density Polyethylene (HDPE)

This material may be specified by some utilities. Unless other data is available, support as for PVC. Same restrictions to traffic barriers apply.

10.8.6 Utility Supports

The following types of supports are generally used for various utilities. Selection of a particular support type should be based on the needs of the installation and the best economy. All utility installations shall address temperature expansion in the design of the system or expansion devices.

Utility supports shall be designed so that a failure will not result in damage to the bridge, the surrounding area, or be a hazard to traffic. Utility supports shall be designed so that any loads imposed by the utility installation do not overstress the conduit, supports, bridge structure, or bridge members.

Designs shall provide longitudinal and transverse support for loads from gravity, earthquakes, temperature, inertia, etc. It is especially important to provide transverse and longitudinal support for Anvil inserts and other similar inserts that cannot resist moment.

The Bridge Engineer should request calculations from the utility company for any attachment detail that may be questionable. Utility attachments, which exert moments or large forces at the supports, shall be accompanied by at least one set of calculations from the utility company. Bridge attachments designed to resist surge forces should always be accompanied by calculations.

Concrete Embedment

This is the best structural support condition and offers maximum protection to the utility. Its cost may be high for larger conduit and the conduit cannot be replaced.

Pipe Hangers

Utility lines shall be suspended by means of cast-in-place anchors, whenever possible. This is the most common type of support for utilities to be hung under the bridge deck. This allows the use of standard cast-in-place inserts and is very flexible in terms of expansion requirements. For heavy pipes over traffic (10” water main or larger), a Safety Factor of 1.5 should be used to resist vertical loads for Strength design. This is to avoid complete failure of the utility hanger system by failure of one hanger. Vertical Anvil Insert, Figure 282 or similar inserts, will not provide resistance to longitudinal forces. Longitudinal and transverse supports shall be provided for its conduits.

Transverse supports may be provided by a second hanger extending from a girder or by a brace against the girder. The Appendix 10.8-A1-1 and 10.8-A1-2 depict typical utility support installations and placement at abutments and diaphragms.

Where PVC conduit is to be supported by hangers or pedestals at intervals, the distance between supports shall be small enough to avoid excessive sag of the conduit. For recommended support spacing and tabulated properties of PVC pipe, see Table 10.8.6-1.

PROPERTIES OF PVC PIPE

The following are recommended support spacings for PVC pipe.
(Ref: Western Plastics Corporation)

PVC Schedule 40

Nominal Size Inches	MM	O.D. Inches	MM	I.D. Inches	MM	Wall Thickness Inches	MM	Pounds Per 100 Feet	Newtons Per Meter	Recom. Support Spacing* (Feet)	(M)
¾	19	1.050	26.7	.824	20.9	.113	2.87	22.0	1.80	4	1.2
1	25	1.315	33.4	1.049	26.6	.133	3.38	32.0	2.67	4½	1.4
1¼	32	1.660	42.2	1.380	35.1	.140	3.50	43.5	3.61	5	1.5
1½	38	1.900	48.3	1.610	40.9	.145	3.68	52.0	4.31	5	1.5
2	51	2.375	60.3	2.067	52.5	.154	3.91	69.5	5.78	5	1.5
2½	64	2.875	73.0	2.469	62.7	.203	5.16	109.5	9.18	6	1.8
3	75	3.500	88.9	3.068	77.9	.216	5.49	143.0	12.0	6	1.8
4	102	4.500	114.3	4.026	102.3	.237	6.02	203.5	17.1	6½	2.0
5	127 (Use 5" PVC Class 200)							276.0	23.2	7	2.1
6	152	6.625	168.3	6.065	154.1	.280	7.11	359.0	30.1	7½	2.3
8	203 (Use 8" PVC Class 160)									8	2.4
10	254									8½	2.6
12	310									9½	2.9

PVC Schedule 80

Nominal Size Inches	MM	O.D. Inches	MM	I.D. Inches	MM	Wall Thickness Inches	MM	Pounds Per 100 Feet	Newtons Per Meter	Recom. Support Spacing* (Feet)	(M)
½	13	.840	21.3	.546	13.9	.147	3.73	20.5	1.72	4½	1.4
¾	19	1.050	26.7	.742	18.8	.154	3.91	28.0	2.34	4½	1.4
1	25	1.315	33.4	.957	24.3	.179	4.55	41.0	3.45	5	1.5
1¼	32	1.660	42.2	1.278	32.5	.191	4.85	56.5	4.76	5½	1.7
1½	38	1.900	48.3	1.500	38.1	.200	5.08	68.5	5.78	5½	1.7
2	51	2.375	60.3	1.939	49.3	.218	5.54	94.5	7.99	6	1.8
2½	64	2.875	73.0	2.323	59.0	.276	7.01	144.5	12.2	6½	2.0
3	75	3.500	88.9	2.900	73.7	.300	7.62	193.0	16.3	7	2.1
4	102	4.500	114.3	3.826	97.2	.337	8.56	282.0	23.8	7½	2.3
5	127	5.563	141.3	4.813	122.3	.375	9.53	392.0	33.0	8	2.4
6	152	6.625	168.3	5.761	146.3	.432	10.97	539.0	45.4	9	2.7
8	203									9½	2.9

*Spacings shown are set for a 100° maximum temperature.

The physical properties of PVC material are:

E = 410,000 psi
Tensile Strength = 7,300 psi at 78°F
Working Stress in Bending 4.0 k/in.^{2}
Temperature Coefficient - .035 inches per 100 degrees F per foot

Table 10.8.6-1

10.9 Utility Review Procedure for Installation on Existing Bridges

It is the responsibility of the Region Utilities Engineer to forward any proposed existing bridge attachments to the Bridge Preservation Office. The Bridge Preservation Office is responsible for reviewing only those details pertaining to the bridge crossing such as attachment details or trenching details adjacent to bridge piers or abutments.

The Bridge Preservation Office reviews proposed utility attachments and either approves the attachment or Returns For Correction (RFC). A current file for most utility attachments is maintained in the Bridge Preservation Office. The turnaround time for reviewing the proposals should not exceed two weeks; however, most attachments that have simple connections with epoxy anchors can be reviewed, stamped, and responded to within one day. This is provided that corrections and additional notes are minimal.

Occasionally, a utility company will request a conceptual approval of their proposed attachment before they invest their time in detailed drawings and calculations. Often they will request this approval by sending a sketch of their proposal directly to the Bridge Office. A letter of response will be sent directly to the utility that concurs with their proposal or suggests an alternate. This letter includes instructions for them to resubmit their final proposal through the Region Utilities Engineer with a courtesy copy of this letter sent to the Region Utilities Engineer.

The Region determines the number of copies to be returned. Most Regions send five copies of the proposed utility attachment. If the proposal is approved, Bridge Preservation will file one copy in the Utility file and return four marked copies. If it has been returned for correction or not approved, one copy is placed in the utility file and two marked copies are returned, thru the Region, to the Utility. See Section 10.9.1, “Utility Review Checklist”.

Utility attachments, which exert moments or large forces at the supports, should be accompanied by at least one set of calculations from the utility company. Bridge attachments designed to resist surge forces should always be accompanied by calculations. The engineer may request calculations from the utility company for any attachment detail that may be questionable.

The engineer shall check the utility company’s design with his own calculations. The connection detail shall be designed to successfully transfer all forces to the bridge without causing overstress in the connections or to the bridge members to which they are attached. For large utilities, the bridge itself shall have adequate capacity to carry the utility without affecting the live load capacity.

Guidelines for Utility Companies

Detailing guidelines for utility companies to follow when designing utility attachments are listed in DOT Form 224-047, “General Notes and Design Criteria for Utility Installations to Existing Bridges”. Commonly used systems are detailed in the Appendix 10.9-A1-1, “Utility Installation Guideline Details for Existing Bridges”.

10.9.1 Utility Review Checklist

This checklist applies to all proposed utility attachments to existing bridges.

1. Complete cursory check to become familiar with the proposal.
2. Determine location of existing utilities.
    a. Check Bridge Inspection Report for any existing utilities.
    b. Check Bridge Preservation’s utility file for any existing utility permits or franchises and possible as-built plans.

c. Any existing utilities on the same side of the structure as the proposed utility should be shown on the proposal.

d. Obtain as-built plans from bridge vault if not in an existing utility file.

3. Review the following with all comments in red:

   a. Layout that includes dimension, directions, SR number and bridge number.

   b. Adequate spacing of supports.

   c. Adequate strength of supports as attached to the bridge (calculations may be necessary).

   d. Maximum design pressure and regular operating pressure for pressure pipe systems.

   e. Adequate lateral bracing and thrust protection for pressure pipe systems.

   f. Does the utility obstruct maintenance or accessibility to key bridge components?

   g. Check Location (elevation and plan view) of the utility with respect to pier footings or abutments. If trench limits encroach within the 45° envelope from the footing edge, consult the Materials Lab.

   h. Force mains or water flow systems may require encasement if they are in excavations below the bottom of a footing.

4. Write a letter of reply or email to the Region so that a copy will be returned to you indicating that the package has been accepted and sent out.

5. Stamp and date the plans using the same date as shown on the letter of reply or email.

6. Create a file folder with the following information:

   a. Bridge no., name, utility company or utility type, and franchise or permit number.

   b. One set of approved plans and possibly one or two pages of the original design plans if necessary for quick future reference. Previous transmittals and plans not approved or returned to correction should be discarded to avoid unnecessary clutter of the files.

   c. Include the letter of submittal and a copy of the letter of reply or email after it has been accepted.

7. Give the complete package to the section supervisor for review and place the folder in the utility file after the review.

10.10 Drainage Design

Even though it is rare that poor drainage is directly responsible for a structural failure, it still must be a primary consideration in the design. Poor drainage can cause problems such as ponding on the roadway, erosion of abutments, and deterioration of structural members. Collecting the runoff and transporting it away from the bridge can prevent most of the problems. Proper geometrics during the preliminary stage is essential in order to accomplish this. The Hydraulics Section recommends placing the bridge deck drainage off of the structure. Therefore, the Bridge Design Section has adopted the policy that all expansion joints will be watertight.

Geometrics

Bridges should have adequate transverse and longitudinal slopes to allow the water to run quickly to the drains. A transverse slope of .02′/ft. and longitudinal slope of 0.5 percent for minimum valves are adequate. Avoid placing sag vertical curves and superelevation crossovers on the structure that could result in hydroplaning conditions or, in cold climates, sheets of ice from melting snow. The use of unsymmetrical vertical curves may assist the designer in shifting the low point off the structure.

Hydrology

Hydrological calculations are made using the rational equation. A 10-year storm event with a 5-minute duration is the intensity used for all inlets except for sag vertical curves where a 50-year storm intensity is required.

On Bridge Systems

Where bridge length and geometry require a bridge drain system within the bridge, the first preference is to place 5-inch diameter pipe drains that have no bars and drop straight to the ground. At other times, such as for steel structures, the straight drop drain is unacceptable and a piping system with bridge drains is required. The minimum pipe diameter should be 6 inches with no sharp bends within the system.

Construction

Bridge decks have a striated finish in accordance with the *Standard Specifications* listed below, however, the gutters have an untextured finish (steel trowel) for a distance of 2 feet from the curb. This untextured area provides for smooth gutter flow and a Manning n value of .015 in the design.

Standard Specification Section 6-02.3(10) — Bridge Decks

Standard Specification Section 5-05.3(11) — Approach Slabs

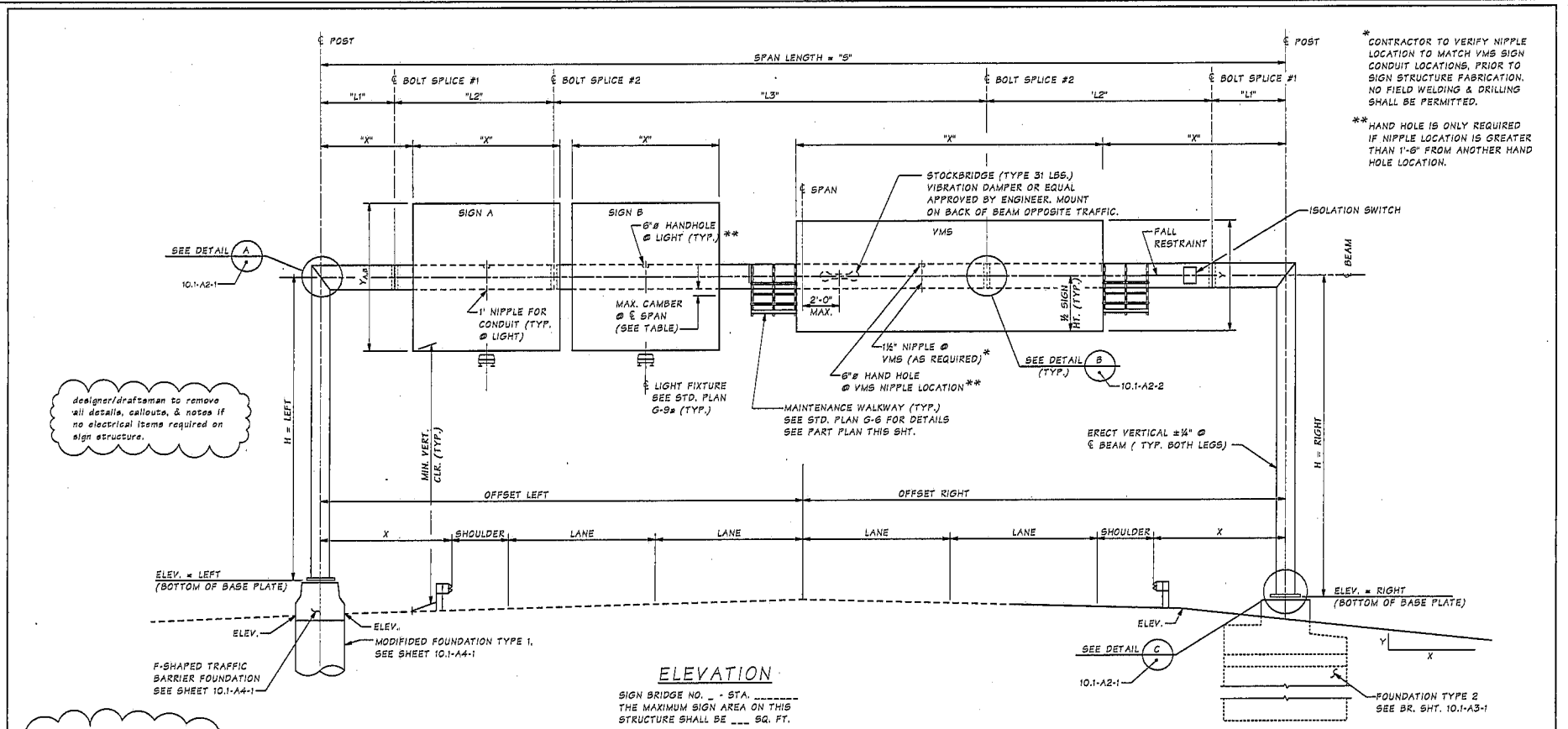

*CONTRACTOR TO VERIFY NIPPLE LOCATION TO MATCH VMS SIGN CONDUIT LOCATIONS, PRIOR TO SIGN STRUCTURE FABRICATION. NO FIELD WELDING & DRILLING SHALL BE PERMITTED.

**HAND HOLE IS ONLY REQUIRED IF NIPPLE LOCATION IS GREATER THAN 1'-6" FROM ANOTHER HAND HOLE LOCATION.

designer/draftsman to remove all details, callouts, & notes if no electrical items required on sign structure.

ELEVATION

SIGN BRIDGE NO. _ - STA. _____
THE MAXIMUM SIGN AREA ON THIS STRUCTURE SHALL BE ___ SQ. FT.

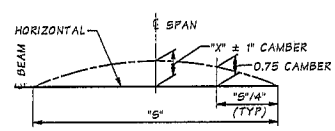

BEAM CAMBER DIAGRAM

LEGEND

B / 15 — IDENTIFIES SECTION, VIEW OR DETAIL; TAKEN OR SHOWN ON BRIDGE SHEET 15

B / — TAKEN OR SHOWN ON THE SAME SHEET

notes to the designer

for general notes and design criteria see monotube sign structure cantilever layout 10.1-A1-2.

all details, callouts & notes if no electrical items required on the sign structure.

existing roadway lines dashed and new roadway is solid.

always show sign in front of structure.

remove notes that are not applicable.

Bridge Design Engr.	M:\STANDARDS\Sign Bridges\MT_SIGN_BRIDGE_LAYOUT.MAN				REGION NO.	STATE	FED. AID PROJ. NO.	SHEET NO.	TOTAL SHEETS
Supervisor					10	WASH.			
Designed By					JOB NUMBER				
Checked By									
Detailed By									
Bridge Projects Engr.									
Prelim. Plan By									
Architect/Specialist	DATE	REVISION	BY	APP'D					

BRIDGE AND STRUCTURES OFFICE

Washington State Department of Transportation

STANDARD SIGN BRIDGES

MONOTUBE SIGN STRUCTURES
SIGN BRIDGE LAYOUT

BRIDGE SHEET NO.
SHEET OF SHEETS

SR JOB NO. SHEET
10.1-A1-1

Mon Mar 31 10:52:21 2008

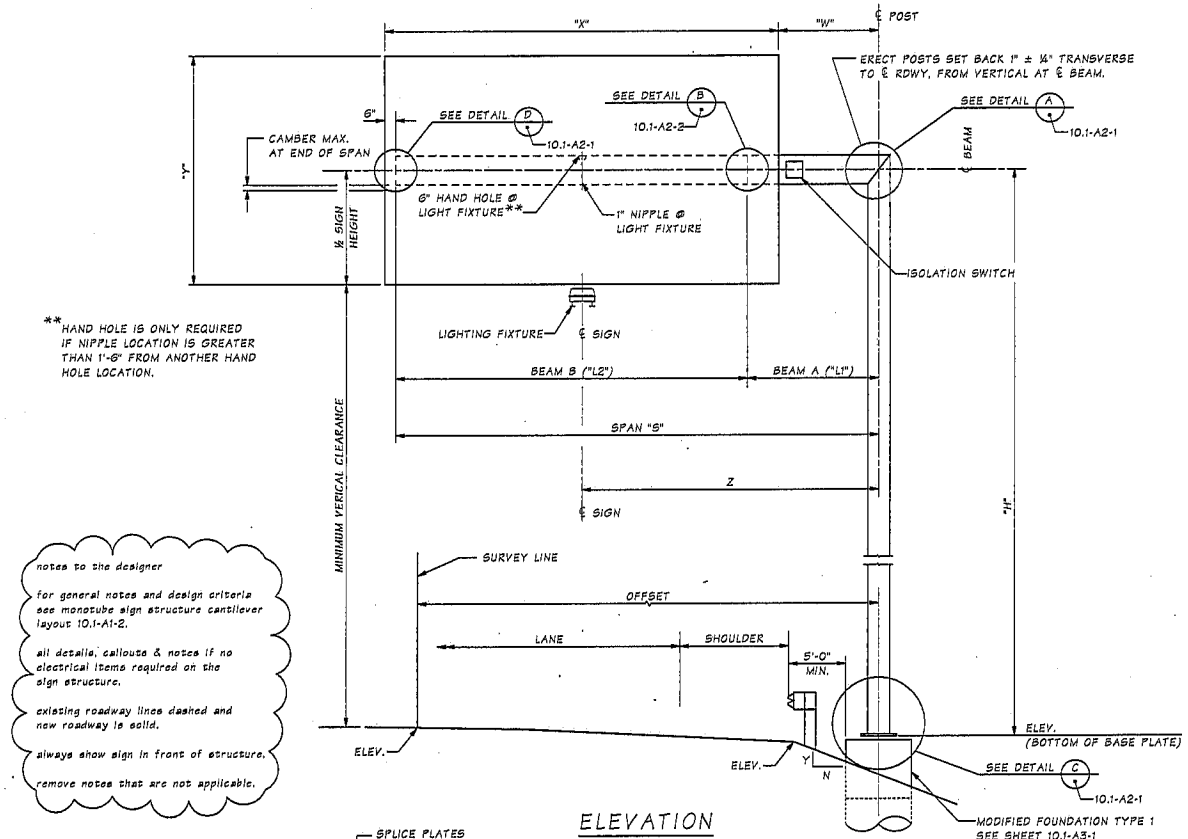

**HAND HOLE IS ONLY REQUIRED IF NIPPLE LOCATION IS GREATER THAN 1'-6" FROM ANOTHER HAND HOLE LOCATION.

notes to the designer

for general notes and design criteria see monotube sign structure cantilever layout 10.1-A1-2.

all details, callouts & notes if no electrical items required on the sign structure.

existing roadway lines dashed and new roadway is solid.

always show sign in front of structure.

remove notes that are not applicable.

ELEVATION

CANTILEVER # _ - STA. _____
THE MAXIMUM SIGN AREA ON THIS STRUCTURE SHALL BE ___ SQ. FT.

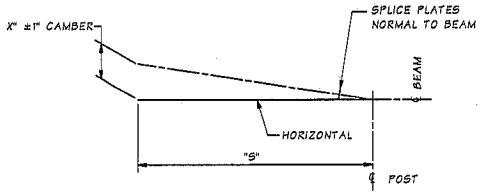

BEAM CAMBER DIAGRAM

LEGEND

B / 15 — IDENTIFIES SECTION, VIEW OR DETAIL TAKEN OR SHOWN ON BRIDGE SHEET 15

B / — TAKEN OR SHOWN ON THE SAME SHEET

GENERAL NOTES

1. ALL MATERIAL AND WORKMANSHIP SHALL BE IN ACCORDANCE WITH THE REQUIERMENTS OF THE WASHINGTON STATE DEPARTMENT OF TRANSPORATION STANDARD SPECIFICATIONS FOR ROAD, BRIDGE, AND MUNICPAL CONSTRUCTION (ENGLISH) DATED 200_ AND AMENDMENTS.
2. ALL BUTT JOINT WELDS SHALL BE FULL PENETRATION GROOVE WELDS WITH BACK-UP PLATES OF ¼" MIN. THICKNESS.
3. THE BACK-UP PLATES FOR ALL FULL PENETRATION WELDS SHALL BE WELDED CONTINUOUSLY TO THE JOINED PIECES. THIS CAN BE DONE BY EITHER A CONTINUOUS FILLET WELD ON THE BACK SIDE OF THE PIECE, OR BY A CONTINUOUS WELD IN THE ROOT OF THE FULL PENETRATION WELD.
4. ALL BOLTS, RODS, AND RELATED HARDWARE SHALL BE GALVANIZED AFTER FABRICATION PER AASHTO M 232.
5. STEEL SURFACES SHALL BE GALVANIZED AFTER FABRICATION IN ACCORDANCE WITH AASHTO M 111. ALL EXTERIOR STEEL SURFACES SHALL BE PAINTED IN ACCORDANCE WITH THE SPECIAL PROVISIONS.
6. SIGN PANELS AS SHOWN IN THE CONTRACT PLANS SHALL BE INSTALLED WITH THE SIGN STRUCATURE OR IMMEDIATELY AFTER THE SIGN STRUCTURE IS ERECTED.

7a. FABRICATION BEAM TO PROVIDE SMOOTH PARABOLIC CAMBER CURVE. SEE CAMBER DIAGRAM. DO NOT SHIM AT BOLTED SPLCIES. (SIGN BRIDGES)

7b. FABRICATION BEAM TO PROVIDE SMOOTH CAMBER CURVE. SEE CAMBER DIAGRAM. DO NOT SHIM AT BOLTED SPLCIES. (CANTILVER SIGNS)

8. FABRICATE POST STRAIGHT.
9. MATERIALS SPECIFICATIONS:

ALL STRUCTURAL STEEL EXCEPT AS OTHERWISE NOTED	ASTM A572 GR. 50 OR ASTM A588
ANCHOR RODS	ASTM F1554 GR. 105
HANDHOLE COVER SCREWS	ASTM F 593 GR. 1
SPLICE BOLTS	AASHTO M 164
SIGN BRACKET BOLTS	ASTM A 307
MOUNTING BEAM BOLTS	AASHTO M 164
COVER PLATES	ASTM A36

10. BASE ELEVATIONS AND POST HEIGHTS SHOWN ARE APPROXIMATE. THE CONTRACTOR SHALL FIELD MEASURE ANCHOR BOLT LOCATIONS, ELEVATIONS AND ALL STEEL STRUCTURE DIMENSIONS PRIOR TO THE FABRICATION OF THE STRUCTURAL STEEL AND NOTIFY THE ENGINEER OF ANY DISCREPANCIES. FINAL VALUES WILL BE FURNISHED BY THE ENGINEER PRIOR TO FABRICATION.
11. POSTS, BASE PLATES, BEAMS AND SPLICE PLATES ARE MAIN LOAD CARRING TENSILE MEMBERS OR TENSION COMPONENTS OF FLEXURAL MEMBERS AND SHALL MEET THE LONGITUDINAL CHARPY V-NOTCH TEST AS DESCRIBED IN SECTION 6-03.2 FOR AASHTO M 270 MATERIAL. NON-DESTRUCTIVE TEST ACCEPTANCE CRITERIA TO CONFORM TO TENSILE MEMBERS WITH CYCLIC LOAD.
12. SEE OTHER PLANS FOR CONDUIT PENETRATIONS AND HAND HOLES. REFER TO ELECTRICAL PLANS FOR INTERNAL ROUTING OF CONDUCTORS. CONDUIT CONDUCTORS SHALL NOT BE ATTACHED TO THE OUTSIDE OF THE SIGN STRUCTURE. ISOLATION SWITCH LOCATED NEAR THE SHOULDER OF ROADWAY ON THE SAME SIDE OF THE BEAM AS THE SIGNS. SEE NEMA 3R TERMINAL CABINATE DETAIL ON SHEET 10.1-A2-1
13. NO VMS ALLOWED ON CANTILEVER MONOTUBE SIGN STRUCTURES.

DESIGN CRITERIA

1. THE SIGN STRUCTURES DESIGN AND ANALYSIS HAS BEEN DONE IN ACCORDANCE WITH AASHTO STANDARD SPECIFICATIONS FOR STRUCTURAL SUPPORTS FOR HIGHWAY SIGNS, LUMINAIRES AND TRAFFIC SIGNALS - FOURTH EDITION - DATED 200_ AND INTERIMS, USING BASIC WIND SPEED OF 90 MPH AND 50 YEARS OF DESIGN LIFE. FATIGUE DESIGN OF THE STRUCTURE CONFORMS TO FATIGUE CATEGORY 1 OF THE SPECIFIED AASHTO STANDARD SPECIFICATIONS.
2. THE MAXIMUM SIGN AREA ON A STRUCTURE SHALL BE AS NOTED.

Bridge Design Engr.	M:\STANDARDS\Sign Bridges\MT_SIGN_BRIDGE_CANTILEVER_LO.MAN								
Supervisor					REGION NO.	STATE	FED. AID PROJ. NO.	SHEET NO.	TOTAL SHEETS
Designed By					10	WASH.			
Checked By					JOB NUMBER				
Detailed By									
Bridge Projects Engr.									
Prelim. Plan By									
Architect/Specialist	DATE	REVISION	BY	APP'D					

BRIDGE AND STRUCTURES OFFICE

Washington State Department of Transportation

STANDARD SIGN BRIDGES

MONOTUBE SIGN STRUCTURES CANTILEVER LAYOUT

SHEET ____ JOB NO. ____ SR 10.1-A1-2

Mon Mar 31 10:52:33 2008

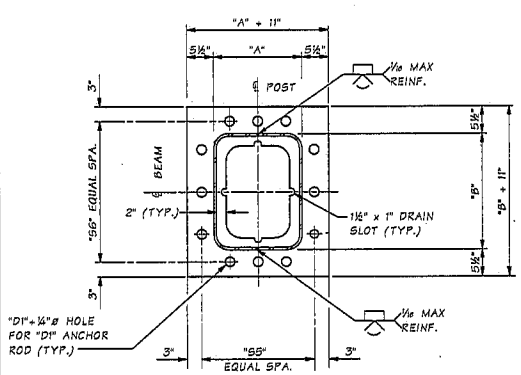

SECTION E

SEE OTHER SHEETS FOR BASES ON BARRIER FOUNDATIONS.

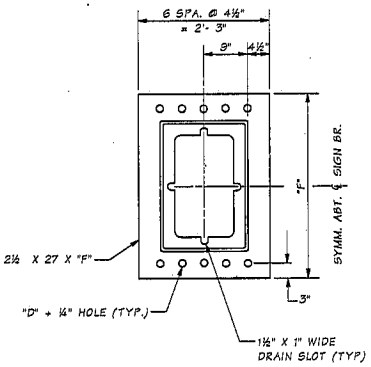

BASE PLATE

FOR INFORMATION NOT SHOWN SEE DETAIL C, SHEET 10.1-A2-2

SPAN	D	F
60' & UNDER	1½"	3'-2"
60' TO 90'	2"	3'-5"
90' TO 120'	2¼"	3'-5"
120' & OVER	N/A	N/A

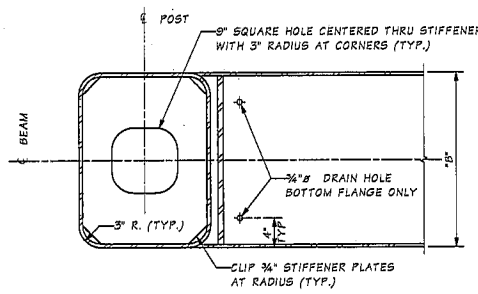

SECTION F

DIAGONAL STIFFENER NOT SHOWN.

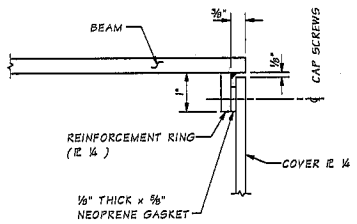

DETAIL D

10.1-A1-2

FOR CANTILEVER STRUCTURES ONLY.
¼" CAP SCREWS ASTM F-593 - TAP REINFORCEMENT RING WITH 8 TOTAL EQUALLY SPACED AROUND COVER ℄

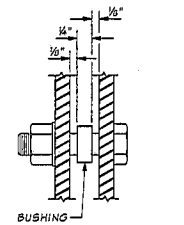

DETAIL G

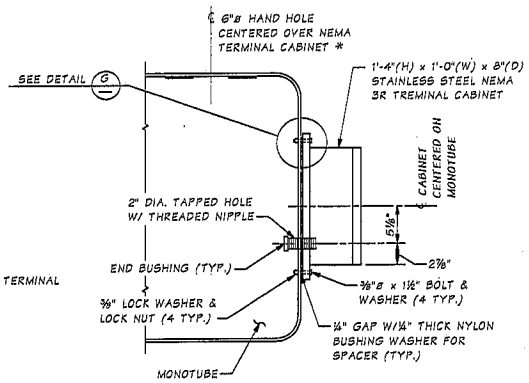

NEMA 3R TERMINAL CABINET DETAIL

* IF NO OTHER HAND HOLE IS WITHIN 1'-6" OF CABINET

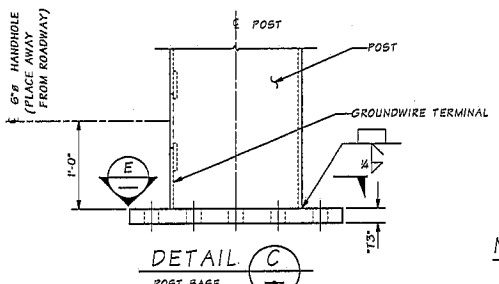

DETAIL C

POST BASE

10.1-A1-1 & 10.1-A1-2

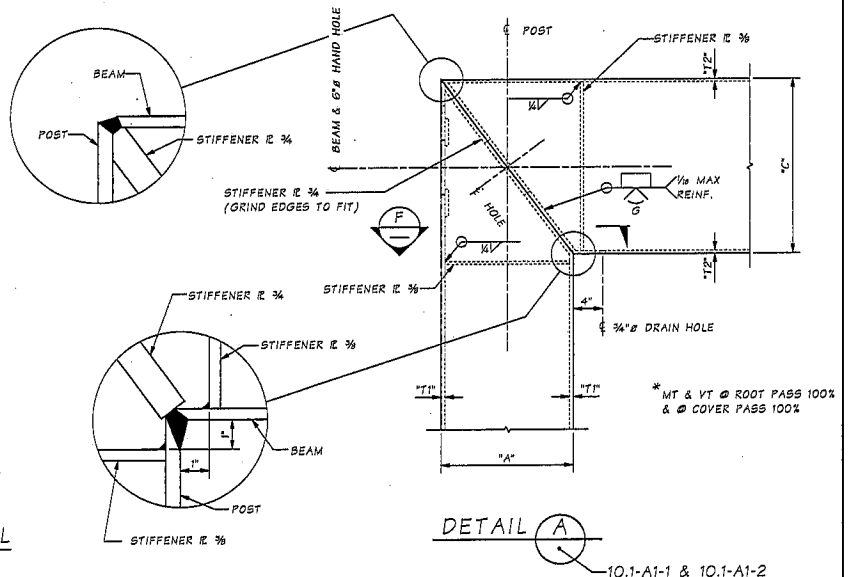

DETAIL A

10.1-A1-1 & 10.1-A1-2

Bridge Design Engr.	M:\STANDARDS\Sign Bridges\MT_SIGN_BRIDGE_STRUCT_DETAILS_1.MAN				REGION NO.	STATE	FED. AID PROJ. NO.	SHEET NO.	TOTAL SHEETS
Supervisor					10	WASH.			
Designed By					JOB NUMBER				
Checked By									
Detailed By									
Bridge Projects Engr.									
Prelim. Plan By									
Architect/Specialist	DATE	REVISION	BY	APP'D					

BRIDGE AND STRUCTURES OFFICE

Washington State Department of Transportation

STANDARD SIGN BRIDGES

MONOTUBE SIGN STRUCTURES STRUCTURAL DETAILS 1

BRIDGE SHEET NO.

SHEET OF SHEETS

SR JOB NO. SHEET

10.1-A2-1

Mon Mar 31 10:52:17 2008

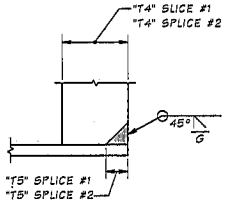

DETAIL H

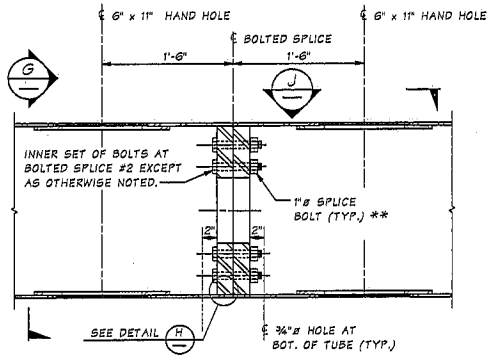

DETAIL B

SECTION THRU BEAM BOLTED SPLICE #2 SHOWN. BOLTED SPLICE #1 SIMILAR.

** 28 - 1¼"ø SPLICE BOLT FOR CANTILEVER SPAN 20'-0 TO 30'-0 EXCEPT AS NOTED

10.1-A1-1 & 10.1-A1-2

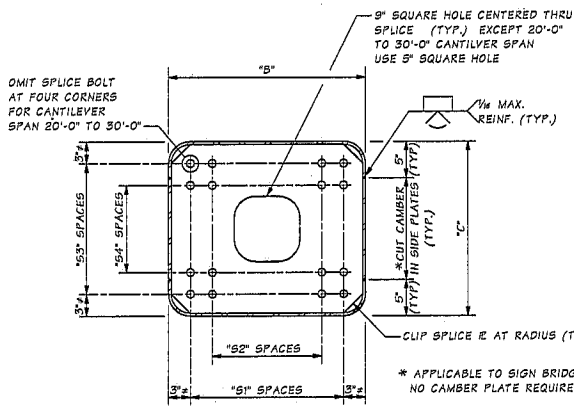

* APPLICABLE TO SIGN BRIDGE CAMBER ONLY. NO CAMBER PLATE REQUIRED FOR CANTILEVER.

≠ 2⅝" FOR CANTILEVER SPAN 20'-0" TO 30'-0"

SECTION G

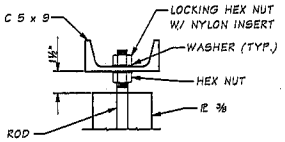

SECTION M

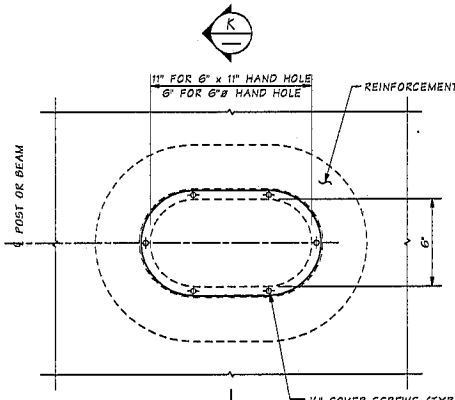

VIEW J

6" x 11" HAND HOLE SHOWN. 6"ø HAND HOLE SIMILAR EXCEPT AS NOTED.

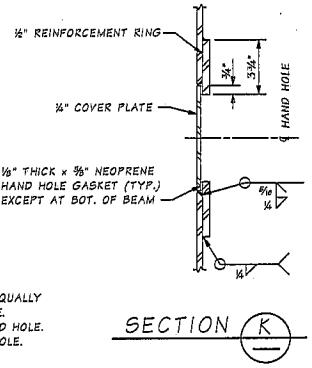

SECTION K

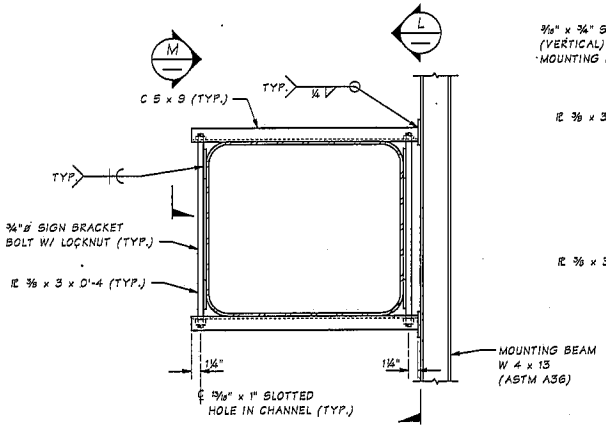

ATTACHMENT BRACKET DETAIL

PAINT ENTIRE ATTACHMENT BRACKET TO MATCH EXISTING STRUCTURE EXCEPT FOR MOUNTING BEAM. SIGN, LIGHT, BEAM LENGTHS, SIZE AND SPACING SHALL BE DETERMINED FROM THE CONTRACT PLANS OR THE STANDARD PLANS. VARIABLE MESSAGE SIGNS SHALL HAVE MOUNTING BEAMS @ 3'-0" MAXIMUM.

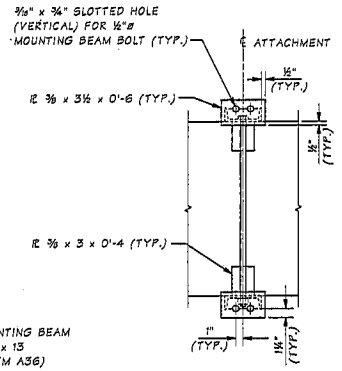

SECTION L

Bridge Design Engr.	M:\STANDARDS\Sign Bridges\MT_SIGN_BRIDGE_STRUCT_DETAILS_2.MAN				HIGHWAY NO.	STATE	FED. AID PROJ. NO.	SHEET NO.	TOTAL SHEETS
Supervisor					10	WASH.			
Designed By					JOB NUMBER				
Checked By									
Detailed By									
Bridge Projects Engr.									
Prelim. Plan By									
Architect/Specialist	DATE	REVISION	BY	APP'D					

Mon Mar 31 10:52:13 2008

BRIDGE AND STRUCTURES OFFICE

Washington State Department of Transportation

STANDARD SIGN BRIDGES

MONOTUBE SIGN STRUCTURES STRUCTURAL DETAILS 2

BRIDGE SHEET NO.

SHEET OF SHEETS

SR JOB NO. SHEET

10.1-A2-2

ANCHOR ROD - "D1"ø x 4'-4" LONG* THREADED ROD WITH 2 WASHERS AND 4 HEAVY HEX NUTS (TYP.). THREAD EACH END 8". GALVANIZE EXPOSED ANCHOR ROD END FOR 1'-0" MIN.

NOTE: USE A TEMPLATE TO LOCATE AND SECURE BOLTS IN PLACE DURING FOUNDATION INSTALLATION. FOR DETAILS, SEE DETAIL B, THIS SHT.

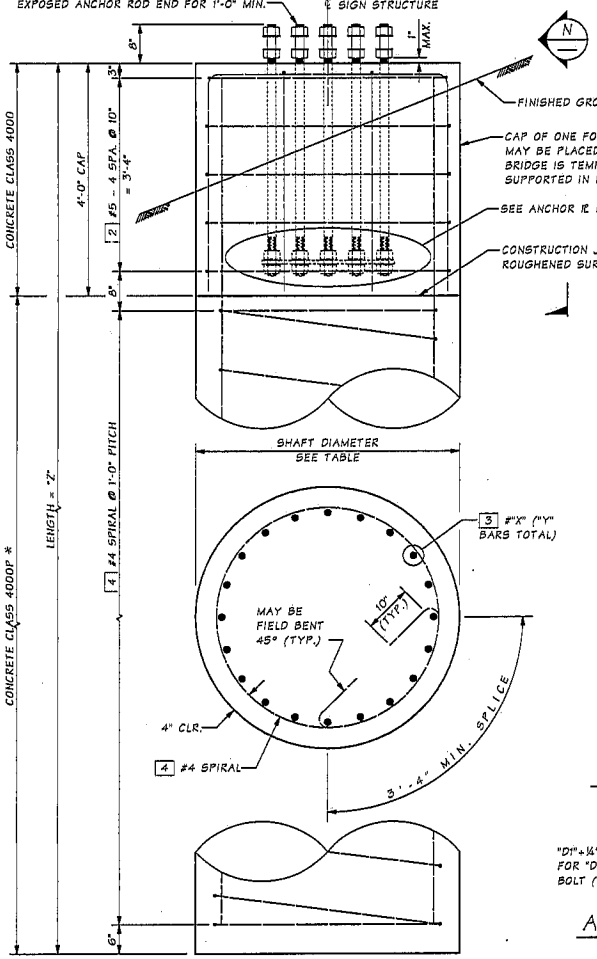

ELEVATION

*USE CONCRETE CLASS 4000W WHEN WATER IS PRESENT IN THE EXCAVATION.

TYPE 1 FOUNDATION TABLE

	SPAN LENGTH ("S")	SHAFT DIAMETER	DEPTH ("Z")	FOUNDATION REINFORCEMENT SIZE ("X")	FOUNDATION REINFORCEMENT NUMBER ("Y")
CANTILEVER SIGN	LESS THAN 20'-0"	4'-6"	12'-6"	9	12
	20'-0" TO 30'-0"	4'-6"	15'-0"	9	16
SIGN BRIDGE	LESS THAN 60'-0"	4'-6"	15'-6"	9	18
	60'-0" TO 90'-0"	4'-6"	19'-0"	9	20
	90'-0" TO 120'-0"	5'-0"	21'-9"	11	15 BUNDLED PAIRS
	120'-0" TO 150'-0"	5'-0"	23'-6"	11	17 BUNDLED PAIRS

SHAFT DEPTH "Z" IS BASED ON ALLOWABLE LATERAL BEARING PRESSURE OF 2500 PSF OR MORE.

BAR LIST

MARK	LOCATION	SIZE	NO. REQ'D.	LENGTH	
1	CAP VERTICAL	4	4	3'-9"	STR.
2	CAP HOOPS	5	5	"A"	
3	SHAFT VERTICAL	"X"	"Y"	"Z"-6"	STR.
4	SHAFT SPIRAL	4	1	"A"	
5	CAP TOP	5	4	"A"	

"A" - DETERMINE FROM PLANS



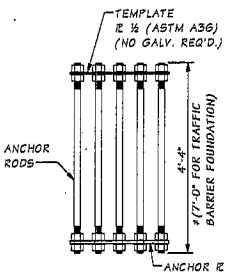

ANCHOR BOLT ARRAY

SHIP THE ANCHOR BOLT ARRAY ASSEMBLY AS A COMPLETE UNIT.

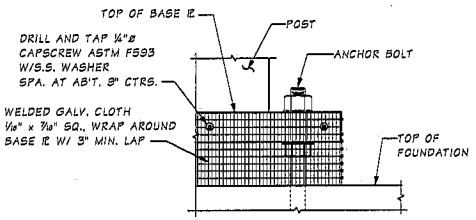

SCREEN DETAIL

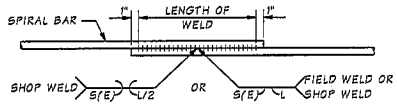

WELDED LAP SPLICE DETAIL

WELDING SHALL MEET THE REQUIREMENTS OF STD. SPEC. 6-02.3(24)E FOR WELD DIMENSIONS, SEE TABLE BELOW.

DEFORMED BAR	WELD DIMENSIONS S	E	LENGTH (L)
#4	¼	⅛	4

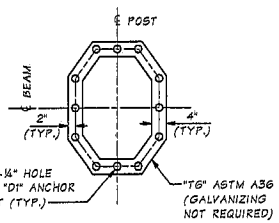

ANCHOR ℄ DETAIL

designer/draftsman, match anchor plate, anchor bolt size, number & pattern

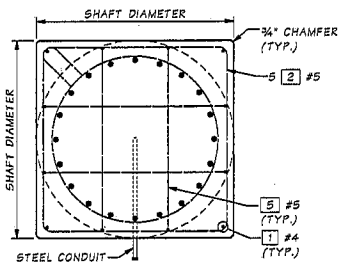

PLAN

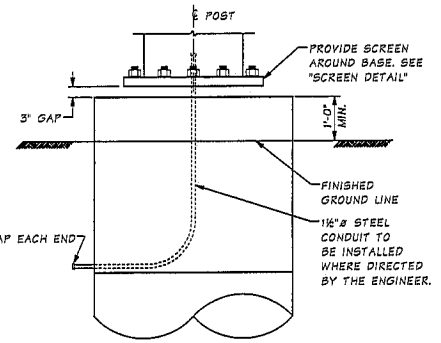

VIEW N

Bridge Design Engr.	M:\STANDARDS\Sign Bridges\MT_SIGN_BRIDGE_FND_TYPE_1.MAN								
Supervisor									
Designed By									
Checked By									
Detailed By									
Bridge Projects Engr.									
Prelim. Plan By									
Architect/Specialist	DATE	REVISION	BY	APPD					

HIGHWAY NO.	STATE	FED. AID PROJ. NO.	SHEET NO.	TOTAL SHEETS
10	WASH.			
JOB NUMBER				

BRIDGE AND STRUCTURES OFFICE

Washington State Department of Transportation

STANDARD SIGN BRIDGES

MONOTUBE SIGN STRUCTURES FOUNDATION TYPE 1

ORIGINAL SHEET NO.

SHEET OF SHEETS

SR 10.1-A3-1 JOB NO. SHEET

Mon Mar 31 10:52:29 2008

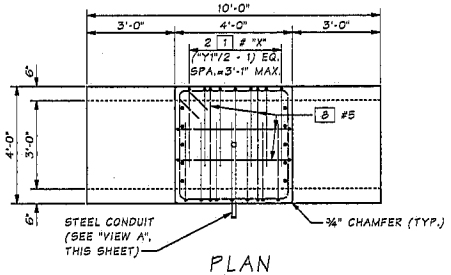

PLAN

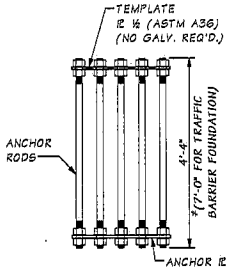

ANCHOR BOLT ARRAY

SHIP THE ANCHOR BOLT ARRAY ASSEMBLY AS A COMPLETE UNIT.

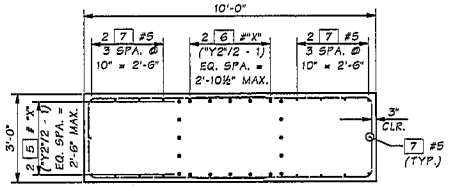

SECTION S

ANCHOR ROD = "D"ø x 4'-4" LONG* THREADED ROD WITH 2 WASHERS AND 4 HEAVY HEX NUTS (TYP.). THREAD EACH END 8". GALVANIZE EXPOSED ANCHOR ROD END FOR 1'-0" MIN.

NOTE: USE A TEMPLATE TO LOCATE AND SECURE BOLTS IN PLACE DURING FOUNDATION INSTALLATION. FOR DETAILS, SEE DETAIL R, THIS SHT.

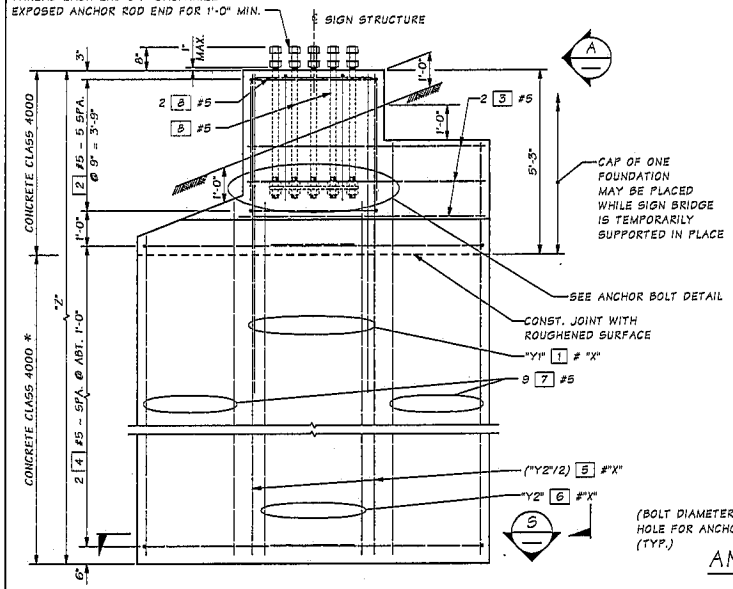

ELEVATION

*USE CONCRETE CLASS 4000W IF WATER IS PRESENT IN THE EXCAVATION.

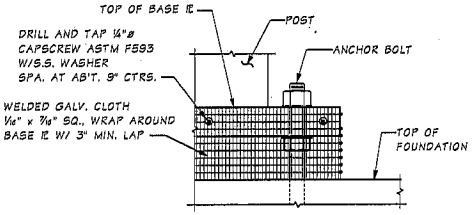

SCREEN DETAIL

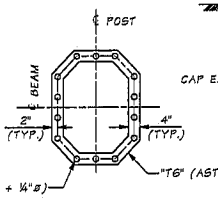

ANCHOR ℄ DETAIL

designer/draftsman, match anchor bolt size, number & pattern

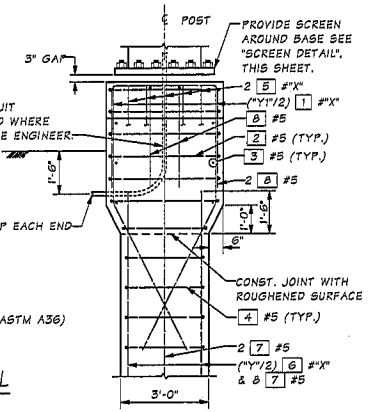

VIEW A

TYPE 2 FOUNDATION TABLE**

STRUCTURE TYPE	SPAN LENGTH ("S")	DEPTH ("Z")	REINFORCEMENT SIZE ("X")	SPACING ("Y1")	SPACING ("Y2")
CANTILEVER SIGN	LESS THAN 20'-0"	7'-3"	9	8	4
	20'-0" TO 30'-0"	9'-6"	9	12	8
SIGN BRIDGE	LESS THAN 60'-0"	9'-0"	9	12	8
	60'-0" TO 90'-0"	11'-0"	9	16	12
	90'-0" TO 120'-0"	12'-9"	11	14	10
	120'-0" TO 150'-0"	13'-6"	11	16	14

* SHAFT DEPTH "Z" IS BASED ON ALLOWABLE LATERAL BEARING PRESSURE OF 2500 PSF OR MORE.

TYPE 3 FOUNDATION TABLE**

STRUCTURE TYPE	SPAN LENGTH ("S")	DEPTH ("Z")	REINFORCEMENT SIZE ("X")	SPACING ("Y1")	SPACING ("Y2")
CANTILEVER SIGN	LESS THAN 20'-0"	11'-0"	9	8	4
	20'-0" TO 30'-0"	13'-9"	9	12	8
SIGN BRIDGE	LESS THAN 60'-0"	12'-9"	9	12	8
	60'-0" TO 90'-0"	15'-6"	9	16	12
	90'-0" TO 120'-0"	17'-9"	11	14	10
	120'-0" TO 150'-0"	19'-6"	11	16	14

** SHAFT DEPTH "Z" IS BASED ON ALLOWABLE LATERAL BEARING PRESSURE BETWEEN 1500 PSF AND 2499 PSF.

BAR LIST

MARK	LOCATION	SIZE	NO. REQ'D.	LENGTH	
1	CAP VERTICAL	"X"	"Y1"	9'-8"	
2	CAP HOOPS	5	6	16'-0"	
3	CAP HORIZONTAL	5	6	"a"	
4	FOUNDATION HOOPS	5	16	15'-5"	STR.
5	FOUNDATION VERTICAL	"X"	"Y2"	"Z" - 6"	
6	FOUNDATION VERTICAL	"X"	"Y2"	"Z" + 4'-0"	
7	FOUNDATION VERTICAL	5	18	"a"	STR.
8	CAP TOP	5	4	10'-4"	STR.

"a" - DETERMINE FROM PLANS

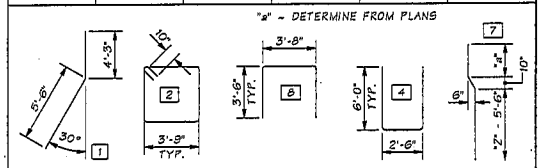

Bridge Design Engr.	M:\STANDARDS\Sign Bridges\MT_SIGN_BRIDGE_FND_TYPE_2AND3.MAN								
Supervisor					POSITION NO.	STATE	FED. AID PROJ. NO.	SHEET NO.	TOTAL SHEETS
Designed By					10	WASH.			
Checked By					JOB NUMBER				
Detailed By									
Bridge Projects Engr.									
Prelim. Plan By									
Architect/Specialist	DATE	REVISION	BY	APP'D					

BRIDGE AND STRUCTURES OFFICE

Washington State Department of Transportation

STANDARD SIGN BRIDGES

MONOTUBE SIGN STRUCTURES FOUNDATION TYPES 2 AND 3

INITIAL SHEET NO.

SHEET

OF SHEETS

SR JOB NO. SHEET 10.1-A3-2

Mon Mar 31 10:52:25 2008

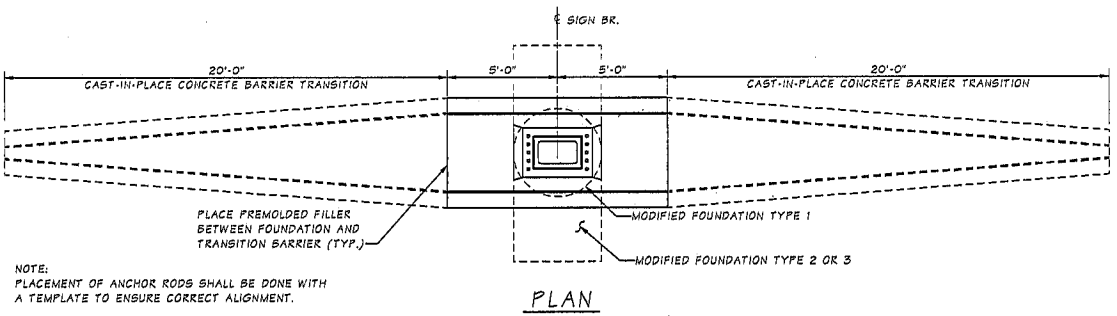

NOTE:
PLACEMENT OF ANCHOR RODS SHALL BE DONE WITH A TEMPLATE TO ENSURE CORRECT ALIGNMENT.

PLAN

BAR LIST

MARK	LOCATION	SIZE	NO. REQ'D.	LENGTH	
11	MEDIAN BARRIER - HORIZ.	5	10 (11*)	5'-9"	STR.
12	MEDIAN BARRIER - VERT.	5	14	7'-10" (VARIES*)	
13	MEDIAN BARRIER - VERT.	5	28 (14*)	6'-10" (VARIES*)	

* DIFFERENT ROADWAY ELEVATIONS
* DIFFERENT ROADWAY ELEVATIONS

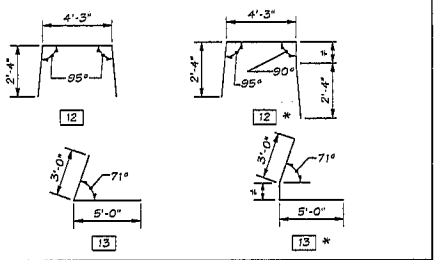

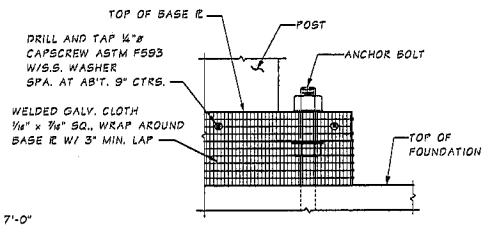

SCREEN DETAIL

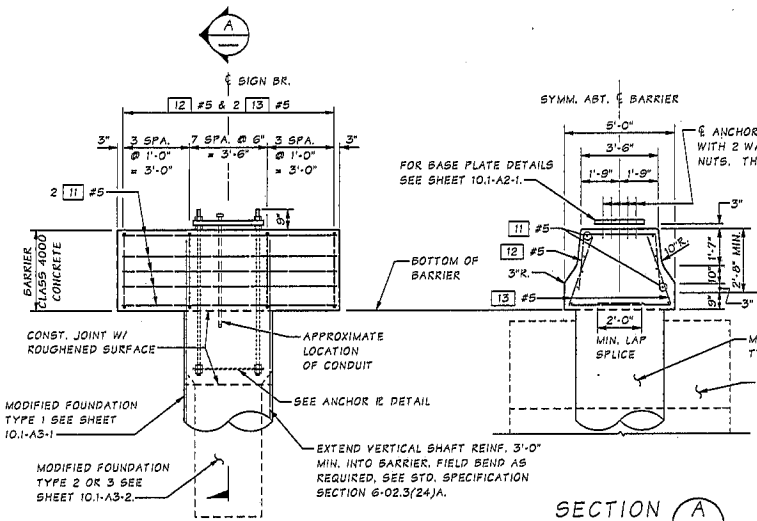

ELEVATION

SECTION A — EQUAL ROADWAY ELEVATIONS

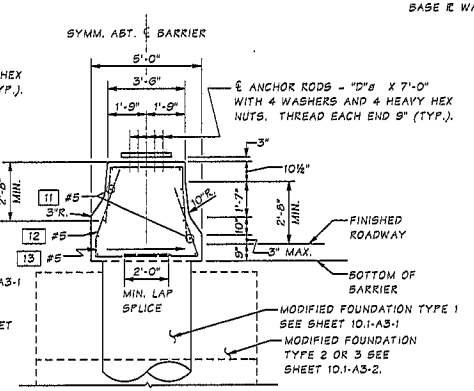

SECTION A — DIFFERENT ROADWAY ELEVATIONS

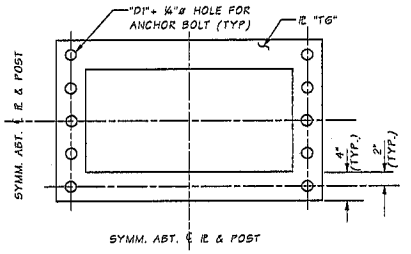

ANCHOR ℄ DETAIL

NOTE:
MODIFIED FOUNDATION TYPE 1, SEE SHEET 10.1-A3-1.
MODIFIED FOUNDATION 2 & 3 SHOWN DASHED, SEE SHEET 10.1-A3-2. FOR VALUE "D" SEE SHEET 10.1-A2.1

Bridge Design Engr.	M:\STANDARDS\Sign Bridges\MT_DBL_FACED_SHAPE_F_FND.MAN							
Supervisor					KLICKITAT (10)	STATE	FED. AID PROJ. NO.	SHEET NO.	TOTAL SHEETS
Designed By					10	WASH.			
Checked By					JOB NUMBER				
Detailed By									
Bridge Projects Engr.									
Prelim. Plan By									
Architect/Specialist	DATE	REVISION	BY	APP'D					

Tue Apr 01 06:35:49 2008

BRIDGE AND STRUCTURES OFFICE

Washington State Department of Transportation

SIGN BRIDGES

MONOTUBE SIGN STRUCTURES
F-SHAPED TRAFFIC BARRIER FOUNDATION

BRIDGE SHEET NO.

SHEET OF SHEETS

SR JOB NO. 10.1-A4-1 SHEET

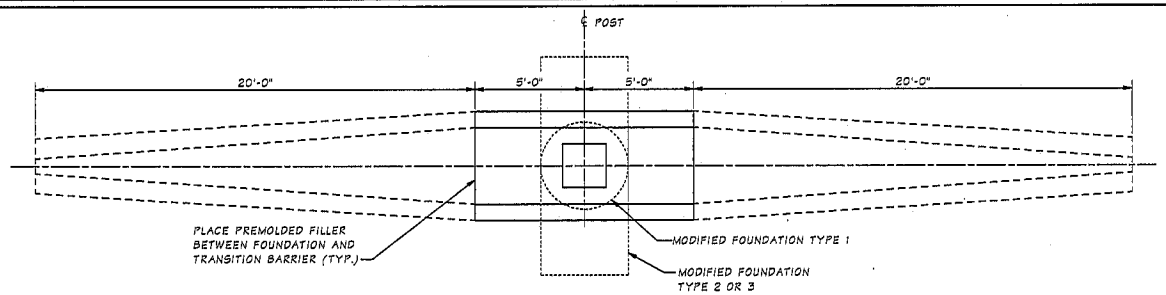

PLAN
BARRIER TRANSITION

BAR LIST					
MARK	LOCATION	SIZE	NO. REQ'D	LENGTH	
21	MEDIAN BARRIER HORIZONTAL	5	10	9'-9"	STR.
22	MEDIAN BARRIER VERTICAL	5	14	7'-8"	
23	MEDIAN BARRIER VERTICAL	5	28	6'-4"	

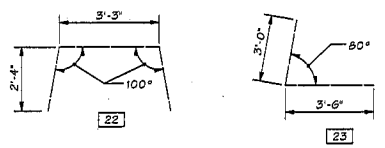

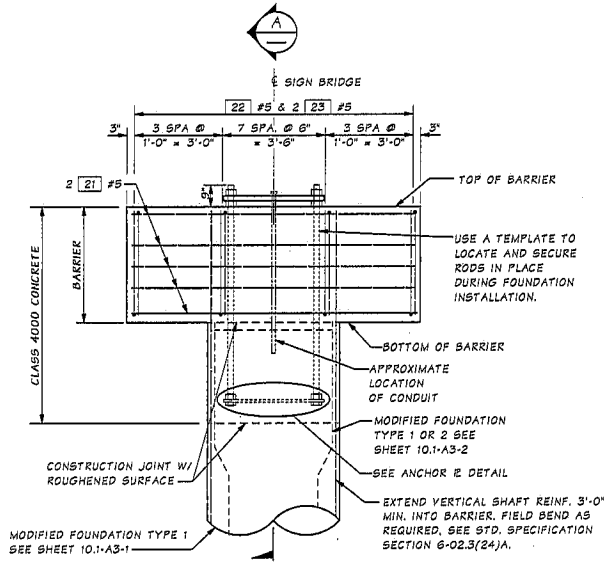

ELEVATION

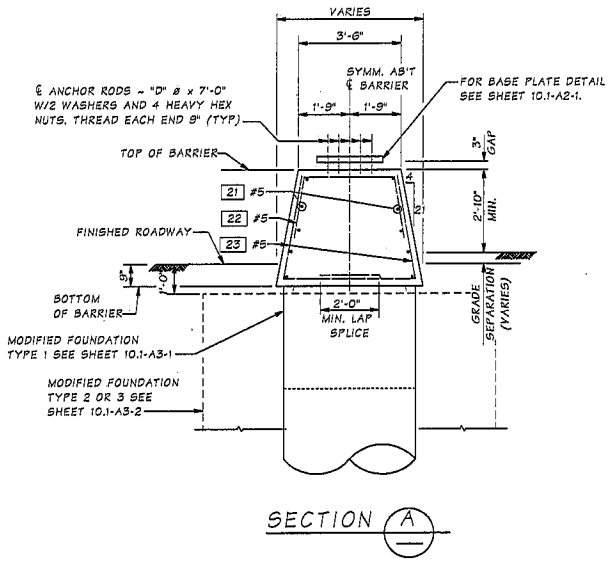

SECTION A

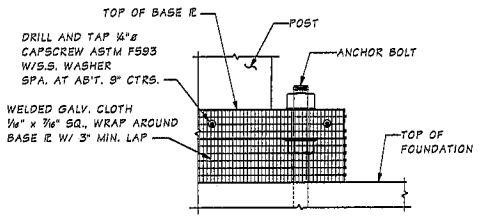

SCREEN DETAIL

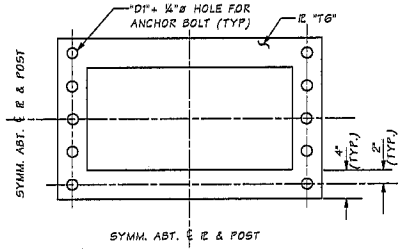

ANCHOR ℄ DETAIL

NOTE:
MODIFIED FOUNDATION TYPE 1, SEE SHEET 10.1-A3-1. MODIFIED FOUNDATION 2 & 3 SHOWN DASHED, SEE SHEET 10.1-A3-2. FOR VALUE "D" SEE SHEET 10.1-A2.1

Bridge Design Engr.	M:\STANDARDS\Sign Bridges\MT_DBL_FACED_SINGLE_SLOPE_FND.MAN							
Supervisor								
Designed By								
Checked By								
Detailed By								
Bridge Projects Engr.								
Prelim. Plan By								
Architect/Specialist	DATE	REVISION	BY	APP'D				

STATE	FED. AID PROJ. NO.	SHEET NO.	TOTAL SHEETS
10 WASH.			
JOB NUMBER			

BRIDGE AND STRUCTURES OFFICE

Washington State Department of Transportation

STANDARD SIGN BRIDGES

MONOTUBE SIGN STRUCTURE
SINGLE SLOPE TRAFFIC BARRIER FOUNDATION

SHEET
JOB NO. 10.1-A4-2 SR

Mon Mar 31 10:52:37 2008

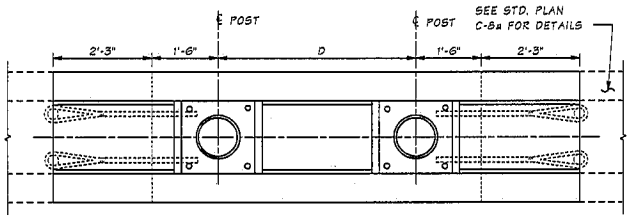

PLAN

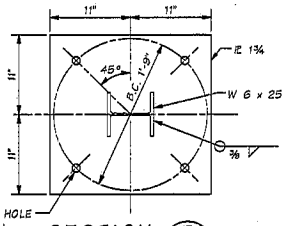

SECTION D

BAR LIST

DOUBLE FACED TRAFFIC BARRIER FOUNDATION

MARK	LOCATION	SIZE	* NO. REQUIRED	LENGTH	
21	MEDIAN BARRIER - BOTTOM LONG.	4	4	"A"	STR.
22	MEDIAN BARRIER - TOP LONG.	6	4	"A"	STR.
23	MEDIAN BARRIER - VERTICAL	4	4	7'-0"	
24	MEDIAN BARRIER - VERTICAL	4	20	3'-5"	
25	MEDIAN BARRIER - VERTICAL	4	14	5'-5"	
26	MEDIAN BARRIER - BOTTOM CAP LONG.	4	2	"A"	STR.

BENDING DIAGRAM

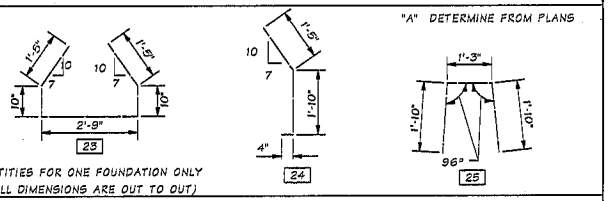

*QUANTITIES FOR ONE FOUNDATION ONLY (ALL DIMENSIONS ARE OUT TO OUT)

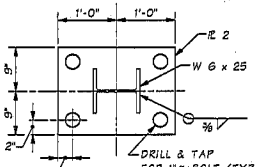

SECTION E

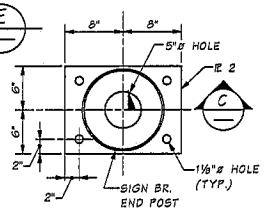

SECTION F

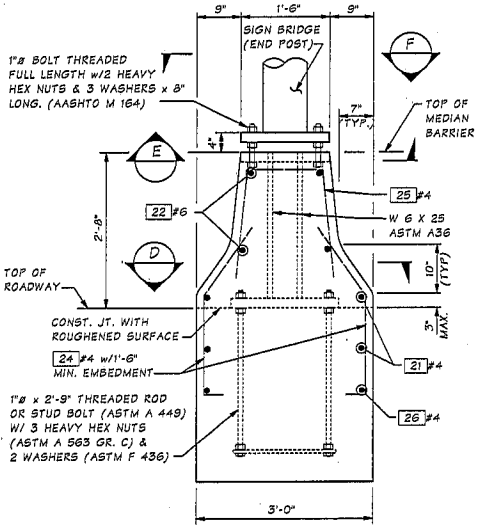

SECTION Q

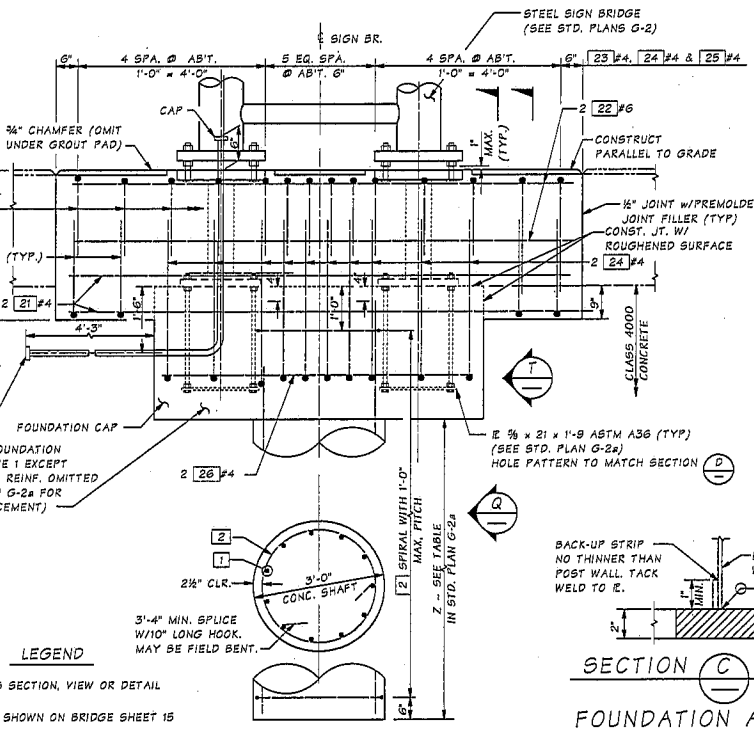

ELEVATION

SECTION C

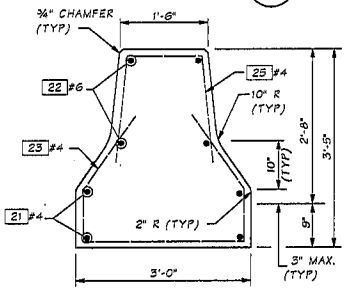

SECTION T

FOUNDATION AT MEDIAN

FOR DETAILS & STEEL REINF. NOT SHOWN SEE STD. PLAN G-2a.

LEGEND

B / 15 — IDENTIFIES SECTION, VIEW OR DETAIL; TAKEN OR SHOWN ON BRIDGE SHEET 15

B / — TAKEN OR SHOWN ON THE SAME SHEET

Bridge Design Engr.	M:\STANDARDS\Sign Bridges\TRUSS_DBL_FACED_SHAPE_F_END.MAN			REGION NO.	STATE	FED. AID PROJ. NO.	SHEET NO.	TOTAL SHEETS
Supervisor				10	WASH.			
Designed By				JOB NUMBER				
Checked By								
Detailed By								
Bridge Projects Engr.								
Prelim. Plan By								
Architect/Specialist	DATE	REVISION	BY	APP'D				

Mon Mar 31 10:52:41 2008

BRIDGE AND STRUCTURES OFFICE

Washington State Department of Transportation

SIGN BRIDGES

TRUSS SIGN STRUCTURES
F-SHAPED TRAFFIC BARRIER FOUNDATION

INITIAL SHEET NO.

SHEET

OF SHEETS

SHEET 10.1-A5-1 JOB NO. SR

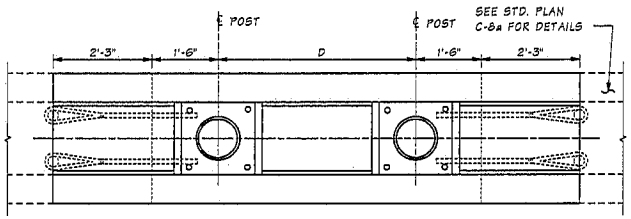

PLAN

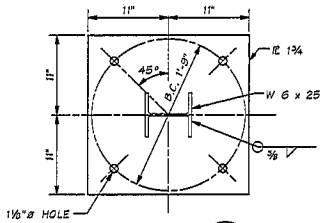

SECTION D

BAR LIST

DOUBLE FACED TRAFFIC BARRIER FOUNDATION

MARK	LOCATION	SIZE	* NO. REQUIRED	LENGTH	
21	MEDIAN BARRIER - BOTTOM LONG.	4	4	"A"	STR.
22	MEDIAN BARRIER - TOP LONG.	6	4	"A"	STR.
23	MEDIAN BARRIER - VERTICAL	4	4	9'1"	
24	MEDIAN BARRIER - VERTICAL	4	20	5'-6"	
25	MEDIAN BARRIER - VERTICAL	4	14	6'-2"	
26	MEDIAN BARRIER - BOTTOM CAP LONG.	4	2	"A"	STR.

BENDING DIAGRAM

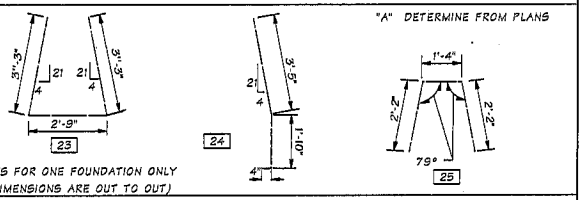

*QUANTITIES FOR ONE FOUNDATION ONLY (ALL DIMENSIONS ARE OUT TO OUT)

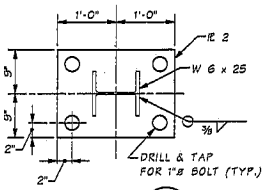

SECTION E

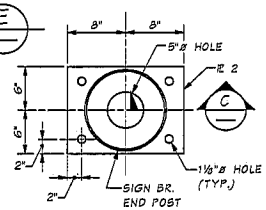

SECTION F

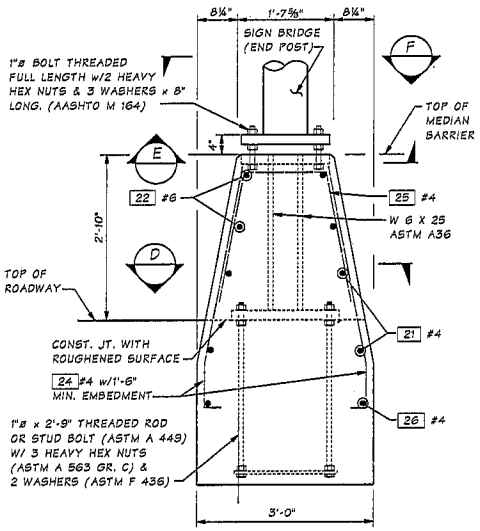

SECTION Q

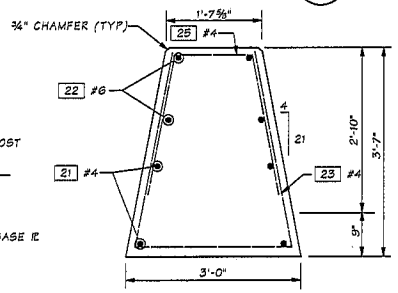

SECTION T

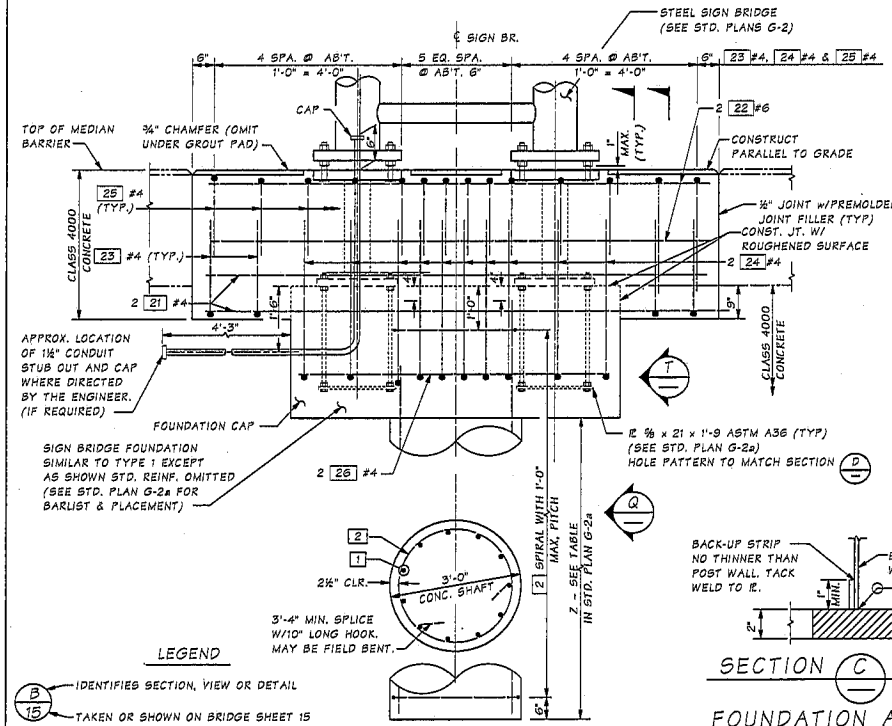

ELEVATION

SECTION C

FOUNDATION AT MEDIAN

FOR DETAILS & STEEL REINF. NOT SHOWN SEE STD. PLAN G-2a.

LEGEND

B / 15 — IDENTIFIES SECTION, VIEW OR DETAIL
TAKEN OR SHOWN ON BRIDGE SHEET 15
B — TAKEN OR SHOWN ON THE SAME SHEET

Bridge Design Engr.	M:\STANDARDS\Sign Bridges\TRUSS_DBL_FACED_SINGLE_SLOPE_FND.MAN								
Supervisor									
Designed By									
Checked By									
Detailed By									
Bridge Projects Engr.									
Prelim. Plan By									
Architect/Specialist	DATE	REVISION	BY	APP'D					

REGION NO.	STATE	FED. AID PROJ. NO.	SHEET NO.	TOTAL SHEETS
10	WASH.			
JOB NUMBER				

BRIDGE AND STRUCTURES OFFICE

Washington State Department of Transportation

SIGN BRIDGES

TRUSS SIGN STRUCTURES
SINGLE SLOPE BARRIER FOUNDATION

SHEET
JOB NO.
SR
10.1-A5-2

Mon Mar 31 10:52:45 2008

Chapter 11 Detailing Practice Contents

11.1 Detailing Practice 11.1-1
- 11.1.1 Standard Office Practices 11.1-1
- 11.1.2 Bridge Office Standard Drawings and Office Examples 11.1-7
- 11.1.3 Plan Sheets 11.1-7
- 11.1.4 Structural Steel 11.1-9
- 11.1.5 Aluminum Section Designations 11.1-11
- 11.1.6 Abbreviations 11.1-12

Appendix A

Appendix 11.1-A1 11.1-A1-1
Appendix 11.1-A2 11.1-A2-1
Appendix 11.1-A3 11.1-A3-1
Appendix 11.1-A4-1 Footing Layout 11.1-A4-1

11.1 Detailing Practice

The following is to provide basic information on drafting and the fundamentals of Bridge and Structures Office drafting practices.

11.1.1 Standard Office Practices

A. **Purpose**

- The purpose of these standards is to enable the Bridge and Structures Office to produce **consistent** and **effective** plan sheets that will have uniform appearance and information.
- Designers and detailers are responsible for ensuring that these criteria are implemented.
- The Bridge Design Engineer must approve deviation from these standards.

B. **Planning**

- The designer and the structural detailer together coordinate the **scope** of the detailing work involved in each project. Time should be allotted for checking plans for accuracy and consistency with office practices.
- Similar bridge plans and details should be reviewed and kept as **examples** for maintaining consistent detailing practices. These examples should not be older than three years.

C. **Drawing Orientation and Layout Control**

- Standard bridge sheet format is 34 inches x 22 inches with the bottom 2 inches used for title block and related information.
- Contract plans are printed, sealed, signed and submitted, half size, on 11” x 17” paper.
- Drawings shall be carefully organized so the intent of the drawing is easily understood.
  - **North arrow** shall be placed on layouts and footing/foundation layouts.
  - **Related details** shall be grouped together in an orderly arrangement: lined up horizontally and vertically and drawn to the same scale.
  - Do not crowd the drawing with details.
  - The following is a standard sheet configuration when plan, elevation, and sectional views are required.
  - The Plan view layout of structures should be oriented from left to right in the direction of increasing state route mileposts. For retaining walls, see the second bullet under subsection I. For layouts of existing bridges undergoing widening, expansion joint or thrie beam retrofit, or other structural modification, this orientation requirement may result in the bridge layout being opposite from what is shown in the original plans. In such cases, the designer and detailer should review the Bridge Preservation Office inspection records for the bridge, and the bridge layout orientation and pier identification should be laid out to be consistent with the Bridge Preservation Office inspection records.

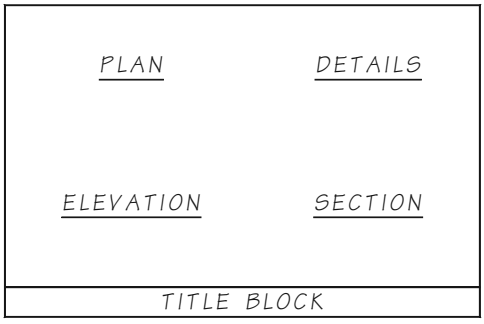

D. **Lettering**

1. General
   - **Lettering** shall be upper case only, slanted at approximately 68 degrees. General text is to be approximately ⅛” high.
   - Text shall be **oriented** so as to be read from the **bottom** or **right edge** of the sheet.
   - **Detail titles** shall be a similar font as general text, about twice as high and of a heavier weight. Underline all titles with a single line having the same weight as the lettering.
   - The **mark number bubble** for reinforcing steel shall be a rectangle.
   - **Epoxy coated** reinforcement shall be noted by an “E” inside a triangle:

     42 E #6

2. **Dimensioning**
   - A dimension shall be shown **once** on a drawing. Duplication and unnecessary dimensions should be avoided.
   - All dimension figures shall be placed above the dimension line, so that they may be read from the bottom or the right edge of the sheet, as shown in the following detail:

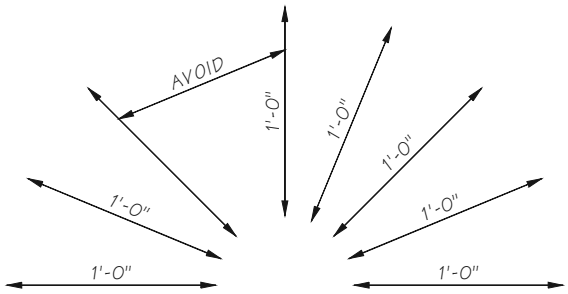

AVOID DIMENSION LINES
INCLINED AS SHOWN ABOVE.

   - Reinforcing bar **clearance** need not be specified on the plans unless different from the “General Notes”.
   - When details or structural elements are complex, utilize two drawings, one for dimensions and the other for reinforcing bar details.
   - Dimensions 12 inches or more shall be given in feet and inches unless the item dimensioned is conventionally designated in inches (for example, 16” pipe).
   - Dimensions that are less than one inch over an even foot, the fraction shall be preceded by a zero (for example, 3’-0¾”).
   - Place dimensions outside the view, preferably to the right or below. However, in the interest of clarity and simplicity it may be necessary to place them otherwise. Examples of dimensioning placement are shown on Appendix 11.1-A1.

E. **Line Work**

- All line work must be of sufficient size, weight, and clarity so that it can be easily read from a print that has been reduced to 11" x 17" or one-half the size of the original drawing.
- The line style used for a particular structural outline, centerline, etc., shall be kept consistent wherever that line is shown within a set of bridge plans.
- Line work shall have appropriate gradations of width to give line contrast as shown below. Care shall be taken that the thin lines are dense enough to show clearly when reproduced.

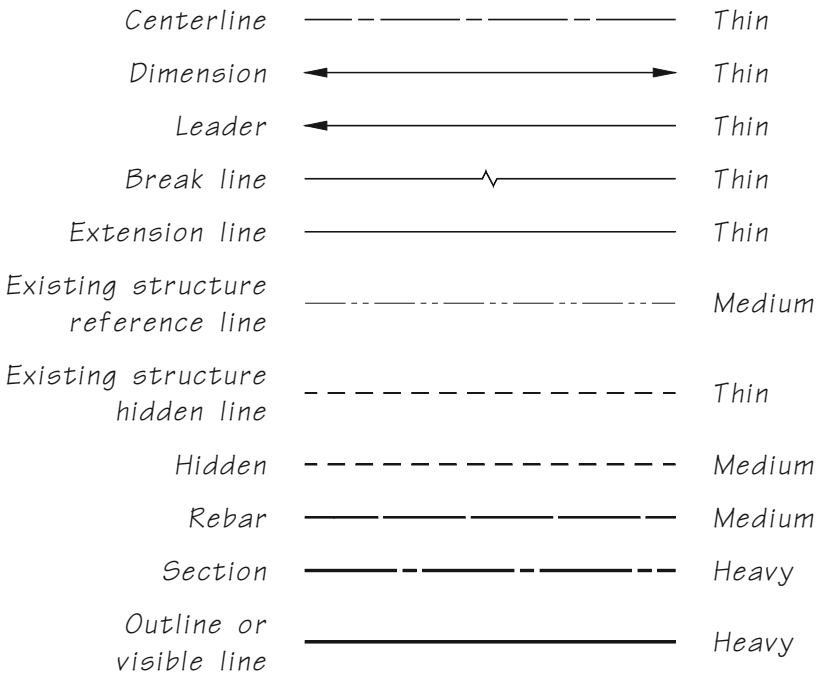

- When drawing structural sections showing reinforcing steel, the **outline** of the sections shall be a **heavier** line weight than the **rebar**.
- The order of **line precedence** (which of a pair of crossing lines is broken) is as follows:

  1. Dimension lines are never broken.
  2. Leader line from a callout.
  3. Extension line.

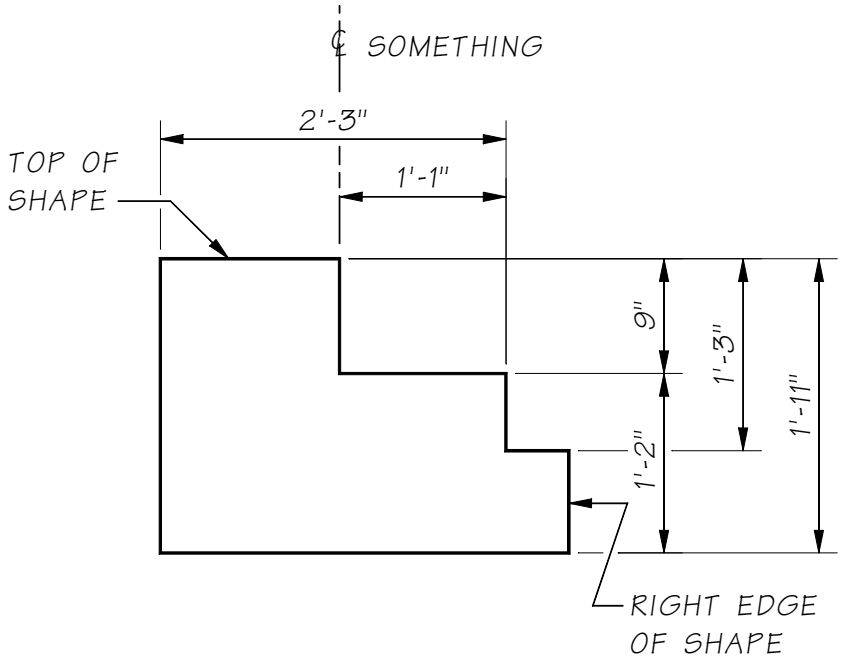

LINE PRECEDENCE DIAGRAM

THIS DIAGRAM DEMONSTRATES WHICH LINE IS TO BE BROKEN WHEN TWO LINES CROSS.

F. **Scale**

- Scales are not to be shown in the plans.
- When **selecting a scale**, it should be kept in mind that the drawing will be reduced. Generally, the minimum scale for a section detail with rebars is ⅜" = 1'. The minimum scale to be used on steel details will be ¾" = 1'.
- The contract plan sheets are not to be used to take measurements in the field. They will, however, be drawn using **scales that can be found on any standard architectural or engineering scale**.
- Care should be taken that all structural elements are **accurately** drawn to scale.
- Sections and views may be enlarged to show more detail, but the number of different scales used should be kept to a minimum.

G. **Graphic Symbols**

1. Graphic symbols shall be in accordance with the following:
   a) Structural steel shapes: See also AISC *Manual of Steel Construction*.
   b) Welding symbols: See Lincoln Welding Chart.
   c) Symbols for hatching different materials are shown on Appendix 11.1-A2.

H. **Structural Sections, Views and Details**

- A **section** cuts through the structure, a view is from outside the structure, a **detail** shows a structural element in more detail – usually a larger scale.
- Whenever possible, sections and views shall be taken looking to the **right, ahead on stationing**, or **down**.
- Care shall be taken to ensure that the **orientation** of a detail drawing is identical to that of the plan, elevation, etc., from which it is taken. Where there is a **skew** in the bridge any sections should be taken from **plan** views.
- The default is to be looking ahead on stationing. The only mention of view orientation is if the view is looking back on stationing.
- On plan and elevation drawings where there is insufficient space to show cut sections and details, the section and detail drawing should be on the plan sheet immediately following the plan and elevation drawing unless there are a series of related plans. If it is impractical to show details on a section drawing, a detail sheet should immediately follow the section drawing. In other words, the order of plan sheets should be from general plan to more minute detail.
- A circle divided into upper and lower halves shall identify structural sections, views, and details. Examples are shown in Appendix 11.1-A3.
- Breaks in lines are allowable provided that their intent is clear.

I. **Miscellaneous**

- **Callout arrows** are to come off either the beginning or end of the sentence. This means the top line of text for arrows coming off the left of the callout or the bottom line of text for arrows pointing right.
- Except for the Layout, **wall elevations** are to show the exposed face regardless of direction of stationing. The Layout sheet stationing will read increasing left to right. The elevation sheets will represent the view in the field as the wall is being built.

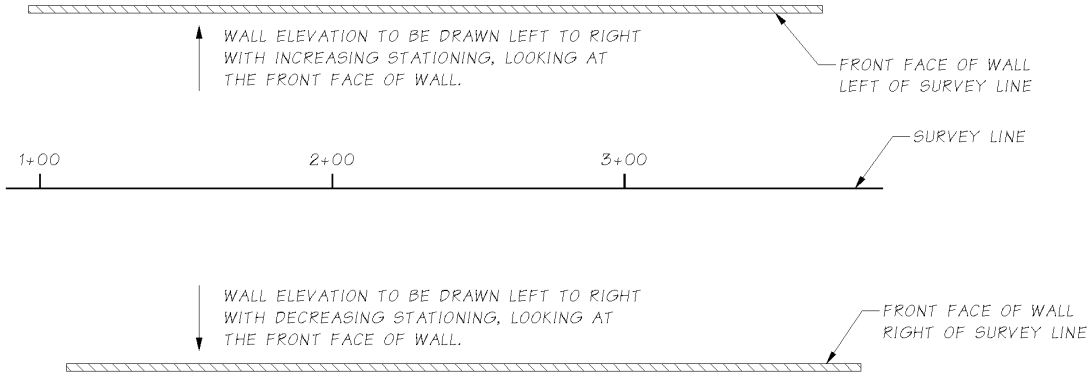

Plan

- Do not detail a bridge element in more than one location. If the element is changed there is a danger that only one of the details is updated.
- Call out each rebar only twice; the spacing for the bar is shown in one view and the bar is pointed to in a view taken from a different angle. The **spacing** for a bar must go on a dimension line with extension lines, do not point to a single bar and call out the spacing.

- When calling out a rebar spacing always give a distance. If the distance needed is an odd number give a maximum spacing. **Do not** use **"equal spaces"** as in "23 equal spaces = 18'-9", the steel workers should not have to calculate the spacing. Also **do not** use the word **"about"** as in 23 spaces @ about 10" = 18'-9" this is open to too much interpretation. Instead these should read **"23 spaces @ 10" max. = 18'-9"**.
- Centerline callouts shall be normal to the line itself approximately an eighth inch from the end of the line:

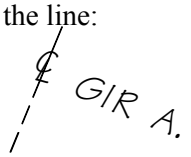

J. **Revisions**

- **Addendums** are made after general distribution and project ad but before the contract is awarded. Changes made to the plan sheets during this time shall be **shaded**. Subsequent addendums are shaded and the shading from previous addendums is removed.
- **Change orders** are made after the contract has been awarded. Changes will be marked with a number inside a circle inside a **triangle**.  Shading for any addendums is removed.
- All addendums and change orders will be noted in the **revision block** at the bottom of the sheet using font BR25.

K. **Title Block**

- The project title is displayed in the contract plan sheet title block. The title consists of Line 1 specifying the highway route number(s), Line 2 and possibly Line 3 specifying the title verbiage. Bridge structures use a fourth line, in a smaller font, to specify the bridge name and number in accordance with the WSDOT Bridge List M-23-09 and BDM Sections 2.3.1.A and 2.3.2.A.
- The exact wording of Lines 1, 2, and 3 of the project title, including line arrangement, abbreviations, and punctuation, is controlled by the project definition as specified by legislative title and the Capital Program Management System (CPMS) database.
- The highway route number(s) in Line 1 shall be consistent with WSDOT naming practice. Interstate routes (5, 82, 90, 182, 205, 405, and 705) shall be specified as I-(number). US routes (2, 12, 97, 97A, 101, 195, 197, 395, and 730) shall be specified as US (number). All other routes shall be specified as SR (number). Projects including two highway routes shall include both route numbers in Line 1, as in "US 2 And I-5". Projects including three or more highway routes shall be specified with the lowest numbered route, followed by "Et Al", as in "SR 14 Et Al".
- The job number block just to the left of the middle of the title block shall display the PS&E Job Number assigned to the project by the Region Plans Office. The PS&E Job Number consists of six characters. The first two characters correspond to the last two digits of the calendar year. The third character corresponds to the letter designation assigned to the specific Region (NWR - A, NCR - B, OR - C, WSF and selected UCO projects - W, SWR - X, SCR - Y, and ER - Z). The final three characters correspond to the three digit number assigned to the specific project by the Region Plans Office.

11.1.2 Bridge Office Standard Drawings and Office Examples

A. **General**

- The Bridge Office provides standard drawings and example sheets of various common bridge elements.

B. **Use of Standards**

- The Standard Drawings are to be considered as nothing more than **examples** of items like girders or traffic barriers which are often used and are very similar from job to job.
- They are to be **copied** to a structure project and **modified to fit** the particular aspects of the structure. They are not intended to be included in a contract plan set without close scrutiny for applicability to the job.

C. **Changes to Standards**

- New standard drawings and revisions to existing drawings shall be approved by the Bridge Design Engineer and shall be made according to the same office practices as contract plan sheets.

11.1.3 Plan Sheets

Plan sheets should be assembled in the **order of construction** and include the items listed below. Phasing or large-scale projects may require more than one sheet to properly detail plan items.

- Layout
- Footing/Foundation Layout
- Abutment
- Pier/Bent
- Bearing Details
- Framing Plan
- Typical Section
- Girders
- Roadway Slab Reinforcement (Plan and transverse section)
- Expansion Joints (if needed)
- Traffic Barrier
- Approach Slab
- Barlist

A. **Layout**

- The Layout sheet shall contain, but is not limited to:
  - Plan View with ascending stations from left to right
  - Elevation View shown as an outside view of the bridge and shall be visually aligned with the plan view.
- The original preliminary plan will be copied to create the final layout. Views, data, and notes may be repositioned to improve the final product.
- Items on the preliminary plan, which should **not** appear on the final layout are as follows:
  - Typical roadway sections.
  - Vertical curve, Superelevation and curve data for other than the main line.
  - Other information that was preliminary or that will be found elsewhere in the plans.

- Items not normally found on the preliminary plan, which should be **added**:
  - **Test hole locations** (designated by 3/16 inch circles, quartered) to plan view.
  - Elevation view of **footings**, **seals**, **piles**, etc. Show elevation at Bottom of footing and, if applicable, the type and size of piling.
  - **General notes** above legend on right hand side, usually in place of the typical section.
  - Title "LAYOUT" in the title block and sheet number in the space provided.
  - Other features, such as lighting, conduit, signs, excavation, riprap, etc. as determined by the designer.
- The preliminary plan checklist in Appendix A, Chapter 2 can be used for reference.

B. **Footing Layout**

- An abutment with a **spread footing** has a Footing Layout. An abutment with piles and pile cap has a Foundation Layout.
- The Footing Layout is a plan of the bridge whose details are limited to those needed to **locate the footings**. The intent of the footing layout is to minimize the possibility of error at this initial stage of construction.
- The Foundation Layout is a plan of the bridge whose details are limited to those needed to **locate the shafts or piles**. The intent of the Foundation layout is to minimize the possibility of error at this initial stage of construction.
- Other related information and/or details such as pedestal sizes, and column sizes are considered part of the pier drawing and **should not be included** in the footing layout.
- The Footing Layout should be shown on the layout sheet if space allows. It need not be in the same scale. When the general notes and footing layout cannot be included on the first (layout) sheet, the footing layout should be included on the second sheet.
- Longitudinally, footings should be located using the **survey line** to reference such items as the footing, centerline pier, centerline column, or centerline bearing, etc.
- When **seals** are required, their locations and sizes should be clearly indicated on the footing layout.
- The Wall Foundation Plan for retaining walls is similar to the Footing Plan for bridges except that it also shows dimensions to the front face of wall.
- Appendix 11.1-A4 is an example of a footing layout showing:
  - The basic information needed.
  - The method of detailing from the survey line.

C. **Abutment**

- Bridge elements that have not yet been built will not be shown. For example, the superstructure is not to be shown, dashed or not, on any substructure details.
- Elevation information for seals and piles or shafts may be shown on the abutment or pier sheets.
- Views are to be oriented so that they represent what the contractor or inspector would most likely see on the ground. Pier 1 elevation is often shown looking back on stationing. A note should be added under the Elevation Pier 1 title saying "Shown looking back on stationing".

D. **Pier/Bent**

- Each pier shall be detailed separately as a general rule. If the intermediate piers are identical except for height, then they can be shown together.

E. **Bearing Details**

F. **Framing Plan**

- Girder Lines must be identified in the plan view (Gir. A, Gir. B, etc.).

G. **Typical Section**

- Girder spacing, which is tied to the bridge construction baseline
- Roadway slab thickness, as well as web and bottom slab thicknesses for box girders
- "A" dimension
- Limits of pigmented sealer
- Profile grade and pivot point and cross slopes
- Utility locations
- Curb to curb roadway width
- Soffit and drip groove geometry

H. **Girders**

- Prestressed girder sheets can be copied from the Bridge Office library but they must be modified to match the project requirements.

I. **Roadway Slab Reinforcement**

- Plan and transverse section views

J. **Expansion Joints**

K. **Traffic Barrier**

- Traffic barrier sheets can be copied from the Bridge Office library but they must be modified to match the project requirements.

L. **Approach Slab**

- Approach slab sheets can be copied from the Bridge Office library and modified as necessary for the project.

M. **Barlist**

- The barlist sheets do not require stamping because they are not officially part of the contract plan set.

11.1.4 Structural Steel

A. **General**

- Flat pieces of steel are termed plates, bars, sheets or strips, depending on the dimensions.

B. **Bars**

- Up to 6 inches wide, 0.203 in. ($^{3}/_{16}$ inch) and over in thickness, or 6 inches to 8 inches wide, 0.230 in. ($^{7}/_{32}$ inch) and over in thickness.

C. **Plates**

- Over 8 inches wide, 0.230 in. ($^{7}/_{32}$ inch) and over in thickness, or over 48 inches wide, 0.180 in ($^{11}/_{64}$ inch) and over in thickness.

D. **Strips**

- Thinner pieces up to 12 inches wide are strips and over 12 inches are sheets. A complete table of classification may be found in the AISC Manual of Steel Construction, 8th Ed. Page 6-3.

E. **Labeling**

- The following table shows the usual method of labeling some of the most frequently used structural steel shapes. Note that the inches symbol (“) is omitted, but the foot symbol (‘) is used for length including lengths less than a foot.

PLATES PL ½ x 34 x 5'-6 GROUP SYMBOL THICKNESS IN INCHES WIDTH IN INCHES LENGTH IN FEET AND INCHES	ANGLES L 6 x 5 x ¾ x 2'-1 GROUP SYMBOL LONG LEG IN INCHES SHORT LEG IN INCHES THICKNESS IN INCHES LENGTH IN FEET AND INCHES
FLAT BARS BAR 2 x ¾ x 0'-6 GROUP SYMBOL WIDTH IN INCHES THICKNESS IN INCHES LENGTH IN FEET AND INCHES	RECTANGULAR HSS HSS 6 x 5 x ¼ x 3'-2 GROUP SYMBOL WIDTH IN INCHES WIDTH IN INCHES WALL THICKNESS IN INCHES LENGTH IN FEET AND INCHES
SQUARE BARS BAR 2 □ x 3'-4 GROUP SYMBOL SIZE IN INCHES CONVENTION FOR "SQUARE" LENGTH IN FEET AND INCHES	CIRCULAR HSS HSS 3.000 x 0.250 x 2'-5 GROUP SYMBOL OUTSIDE DIAM. IN INCHES WALL THICKNESS IN INCHES LENGTH IN FEET AND INCHES
ROUND BARS BAR 2 ø x 0'-4 GROUP SYMBOL SIZE IN INCHES CONVENTION FOR "ROUND" LENGTH IN FEET AND INCHES	PIPES 1½"ø STD PIPE NOMINAL DIAM. IN INCHES DESIGNATION GROUP SYMBOL

11.1.5 Aluminum Section Designations

The designations used in the tables are suggested for general use.

SECTION	DESIGNATION	EXAMPLE
I-Beams	I *DEPTH x WT*	14 x 3.28
Wide-Flange Sections	WF *DEPTH x WT*	WF4 x 4.76
Wide-Flange Sections, Army-Navy Series	WF(A-N) *DEPTH x WT*	WF(A-N)4 x 1.79
American Standard Channels	C *DEPTH x WT*	C4 x 1.85
Special Channels	CS DEPTH x WT	CS4 x 3.32
Wing Channels	CS(WING) *WIDTH x WT*	CS(WING)4 x 0.90
Army-Navy Channels	C(A-N) *DEPTH x WT*	C(A-N)4 x 1.58
Angles	L *LL x LL x TH*	L3 x 3 x 0.25
Square End Angles	LS *LL x LL x TH*	LS2 x 2 x 0.187
Bulb Angles	BULB L *LL1 x LL2 x TH1 x TH2*	BULB L4 x 3.5 x 0.375 x 0.375
Bulb Angle, Army-Navy Series	BULB L(A-N) *LL1 x LL2 x TH1 x TH2*	BULB L(A-N) 3 x 2 x 0.188 x 0.188
Tees	T *DEPTH x WIDTH x WT*	T4 x 4 x 3.43
Army-Navy Tees	T(A-N) *DEPTH x WIDTH x WT*	T(A-N)4 x 4 x 2.27
Zees	*Z DEPTH x WIDTH x WT*	Z4 x 3.06 x 2.85
Plates	PL *TH x WIDTH*	PL¼ x 8
Rods	RD *DIA*	RD 1
Square Bars	SQ *SDIM*	SQ 4
Rectangle Bars	RECT *TH x WIDTH*	RECT¼ x 4
Round Tubes	*ODIA OD x TH* WALL	4OD x 0.125 WALL
Square Tubes	*ODIM SQ x TH* WALL	3SQ x 0.219 WALL
Rectangle Tubes	*DEPTH* x *WIDTH RECT x TH* WALL	4 x 1.5 RECT x 0.104 WALL

WT - WEIGHT in LB/FT based on density of 0.098
TH - THICKNESS, LL - LEG LENGTH, DIA – DIAMETER
ODIA - OUTSIDE DIAMETER, ODIM - OUTSIDE DIMENSION
SDIM - SIDE DIMENSION

All lengths in inches

11.1.6 Abbreviations

A. **General**

- Abbreviations, as a rule, are to be **avoided**.
- Because different words sometimes have identical abbreviations, the word should be spelled out where the meaning may be in doubt.
- A few **standard signs** are in common use in the Bridge and Structures Office. These are listed with the abbreviations.
- A **period** should be placed after all abbreviations, except as listed below.
- **Apostrophes** are usually not used. Exceptions: pav't., req'd.
- Abbreviations for **plurals** are usually the same as the singular. Exceptions: figs., no., ctrs., pp.
- No abbreviations in titles.

B. **List of abbreviations commonly used on bridge plan sheets:**

A

abutment	ABUT.
adjust, adjacent	ADJ.
aggregate	AGG.
alternate	ALT.
ahead	AHD.
aluminum	AL.
American Society for Testing and Materials	ASTM
American Association of State Highway and Transportation Officials	AASHTO
and	&
angle point	A.P.
approved	APPRD.
approximate	APPROX.
area	A
asbestos cement pipe	ASB. CP
asphalt concrete	AC
asphalt treated base	ATB
at	@ (used only to indicate spacing or pricing, otherwise spell it out)
avenue	AVE.
average	AVG.

B

back	BK.
back of pavement seat	B.P.S.
bearing	BRG.
begin horizontal curve (Point of Curvature)	P.C.
begin vertical curve	BVC
bench mark	BM
between	BTWN.
bituminous surface treatment	BST
bottom	BOT.
boulevard	BLVD.
bridge	BR.

bridge drain	BR. DR.
building	BLDG.
buried cable	BC
C	
cast-in-place	CIP
cast iron pipe	(C.I.P.)
center, centers	CTR., CTRS.
centerline	℄
center of gravity	CG
center to center	CTR. TO CTR., C/C
Celsius (formerly Centigrade)	C
cement treated base	CTB
centimeters	CM.
class	CL.
clearance, clear	CLR.
compression, compressive	COMP.
column	COL.
concrete	CONC.
conduit	COND.
concrete pavement	PCCP (Portland Cement Concrete Pavement)
construction	CONST. or CONSTR.
continuous	CONT. or CONTIN.
corrugated	CORR.
corrugated metal	CM
corrugated steel pipe	CSP
countersink	CSK.
county	CO.
creek	CR.
cross beam	X-BM.
crossing	XING
cross section	X-SECT.
cubic feet	CF or CU. FT. or $FT.^3$
cubic inch	CU. IN. or $IN.^3$
cubic yard	CY or CU. YD. or YD^3
culvert	CULV.
D	
degrees, angular	° or DEG.
degrees, thermal	C or F
diagonals(s)	DIAG.
diameter	DIAM. or ø
diaphragm	DIAPH.
dimension	DIM.
double	DBL.
drive	DR.

E

each	EA.
each face	E.F.
easement	EASE., ESMT.
East	E.
edge of pavement	EP
edge of shoulder	ES
endwall	EW
electric	ELECT
elevation	EL. or ELEV.
embankment	EMB.
end horizontal curve (Point of Tangency)	P.T.
end vertical curve	EVC
Engineer	ENGR.
equal(s) or = (mathematical result)	EQ. (as in eq. spaces)
estimate(d)	EST.
excavation	EXC.
excluding	EXCL.
expansion	EXP., EXPAN.
existing	EXIST.
exterior	EXT.

F

Fahrenheit	F
far face	F.F.
far side	F.S.
feet (foot)	FT. or ’
feet per foot	FT./FT. or ’/’ or ’/FT.
field splice	F.S.
figure, figures	FIG., FIGS.
flat head	F.H.
foot kips	FT-KIPS
foot pounds	FT-LB
footing	FTG.
forward	FWD.
freeway	FWY.

G

gallon(s)	GAL.
galvanized	GALV.
galvanized steel pipe	GSP
gauge	GA.
General Special Provisions	GSP
girder	GIR.
ground	GR.
guard railing	GR

H

hanger	HGR.
height	HT.
height (retaining wall)	H
hexagonal	HEX.
high strength	H.S.
high water	H.W.
high water mark	H.W.M.
highway	HWY.
horizontal	HORIZ.
hot mix asphalt	HMA
hour(s)	HR.
hundred(s)	HUND.

I

included, including	INCL.
inche(s)	IN. or “
inside diameter	I.D.
inside face	I.F.
interior	INT.
intermediate	INTERM.
interstate	I
invert	INV.

J

joint	JT.
junction	JCT.

K

kilometer(s)	KM.
kilopounds	KIPS, K.

L

layout	LO
left	LT.
length of curve	L.C.
linear feet	L.F.
longitudinal	LONGIT.
lump sum	L.S.

M

maintenance	MAINT.
malleable	MALL.
manhole	MH
manufacturer	MFR.
maximum	MAX.
mean high water	MHW
mean higher high water	MHHW
mean low water	MLW
mean lower low water	MLLW
meters	M.
mile(s)	MI.
miles per hour	MPH
millimeters	MM.

minimum	MIN.
minute(s)	MIN. or ‘
miscellaneous	MISC.
modified	MOD.
monument	MON.

N

National Geodetic Vertical Datum 1929	NGVD 29
near face	N.F.
near side	N.S.
North	N.
North American Vertical Datum 1988	NAVD 88
Northbound	NB
not to scale	NTS
number; numbers	#, NO., NOS.

O

or	/
original ground	O.G.
ounce(s)	OZ.
outside diameter	O.D.
outside face	O.F.
out to out	O to O
overcrossing	O-XING
overhead	OH

P

page; pages	P.; PP.
pavement	PAV’T
pedestrian	PED.
per cent	%
pivot point	PP
Plans, Specifications and Estimates	PS&E
plate	¡ or PL
point	PT.
point of compound curve	PCC
point of curvature	P.C.
point of intersection	P.I.
point of reverse curve	PRC
point of tangency	P.T.
point on vertical curve	PVC
point on horizontal curve	POC
point on tangent	POT
polyvinyl chloride	PVC
portland cement concrete	PCC
pound, pounds	LB., LBS., #
pounds per square foot	PSF, LBS./FT.^{2}, LBS./‘,or #/’
pounds per square inch	PSI, LBS./IN.^{2}, LBS./“,or #/”
power pole	PP
precast	P.C.

pressure	PRES.
prestressed	P.S.
prestressed concrete pipe	P.C.P.
Puget Sound Power and Light	P.S.P.&L.
Q	
quantity	QUANT.
quart	QT.
R	
radius	R.
railroad	RR
railway	RWY.
Range	R.
regulator	REG.
reinforced, reinforcing	REINF.
reinforced concrete	RC
reinforced concrete box	RCB
reinforced concrete pipe	RCP
required	REQ'D
retaining wall	RET. WALL
revised (date)	REV.
right	RT.
right of way	R/W
road	RD.
roadway	RDWY.
route	RTE.
S	
seconds	SEC. or "
Section (map location)	SEC.
Section (of drawing)	SECT.
sheet	SHT.
shoulder	SHLD. or SH.
sidewalk	SW. or SDWK
South	S.
southbound	SB
space(s)	SPA.
splice	SPL.
specification	SPEC.
square foot (feet)	SQ. FT. or FT.^{2}
square inch	SQ. IN. or IN.^{2}
square yard	SY, SQ. YD. or YD.^{2}
station	STA.
standard	STD.
state route	SR
stiffener	STIFF.
stirrup	STIRR.
structure, structural	STR.
support	SUPP.
surface, surfacing	SURF.
symmetrical	SYMM.

T	
tangent	TAN. or T.
telephone	TEL.
temporary	TEMP.
test hole	T.H.
thick(ness)	TH.
thousand	M
thousand (feet) board measure	MBM
ton(s)	T.
total	TOT.
township	T.
transition	TRANS.
transportation	TRANSP.
transverse	TRANSV.
treatment	TR.
typical	TYP.
U	
ultimate	ULT.
undercrossing	U-XING
V	
variable, varies	VAR.
vertical	VERT.
vertical curve	V.C.
vitrified clay pipe	VCP
volume	VOL. or V
W	
water surface	W.S.
weight(s)	WT.
welded steel pipe	WSP
welded wire fabric	W.W.F.
West	W.
Willamette Meridian	W.M.
wingwall	W.W.
with	W/
without	W/O
Y	
yard, yards	YD., YDS.
year(s)	YR.

Appendix 11.1-A1

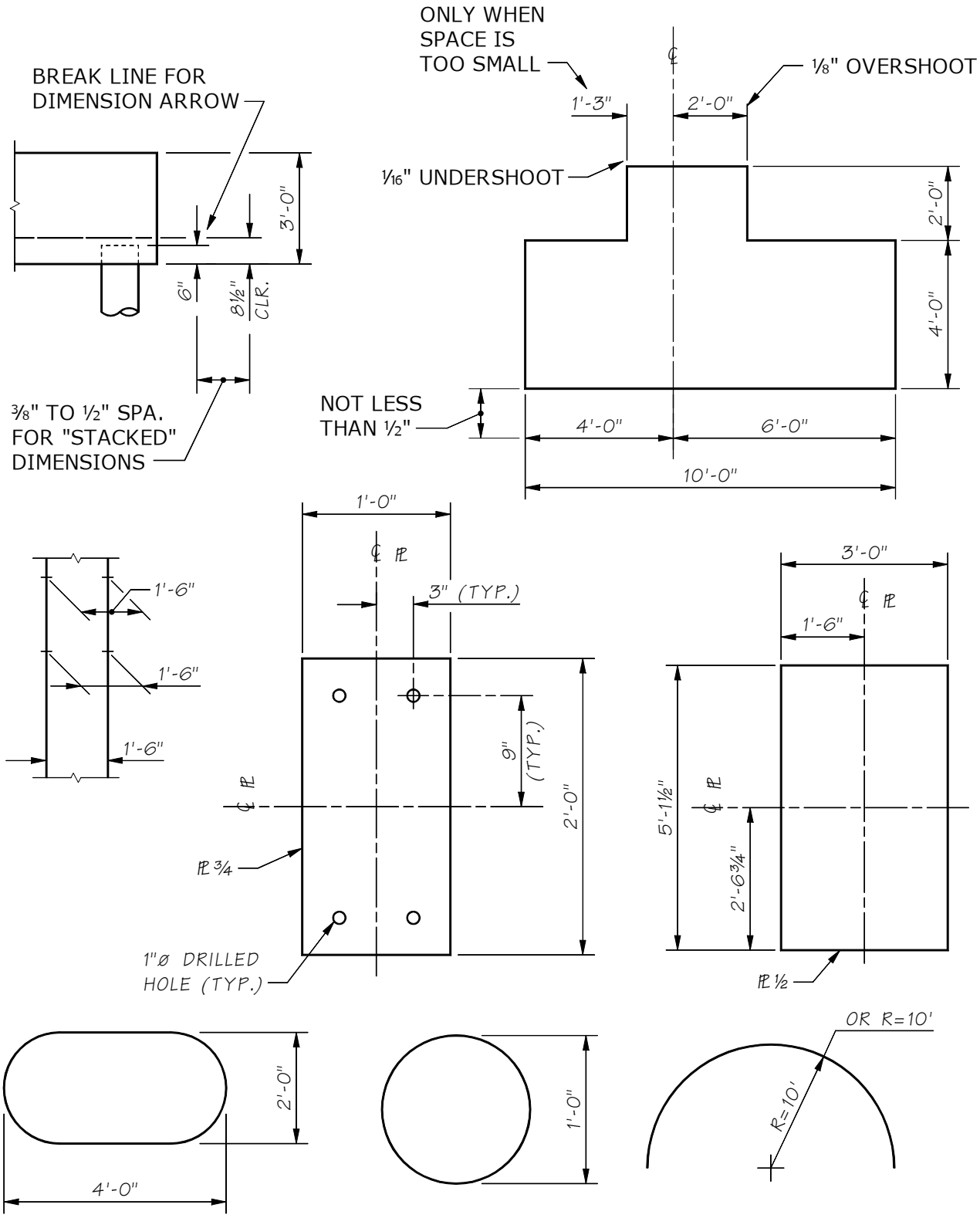

Appendix 11.1-A2

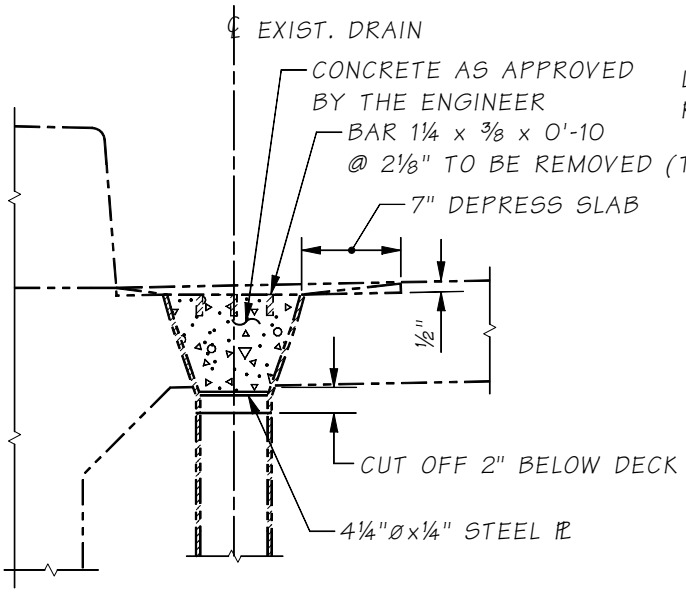

TYPICAL CONCRETE DETAIL

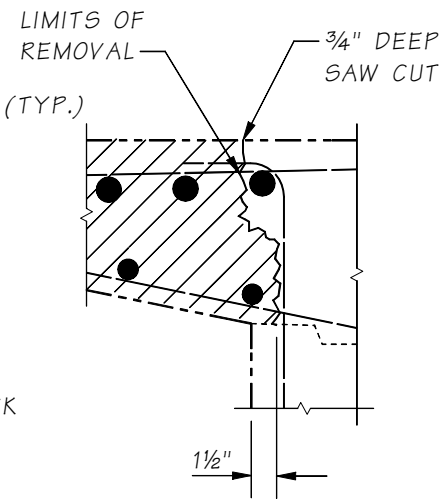

TYPICAL REMOVAL DETAIL

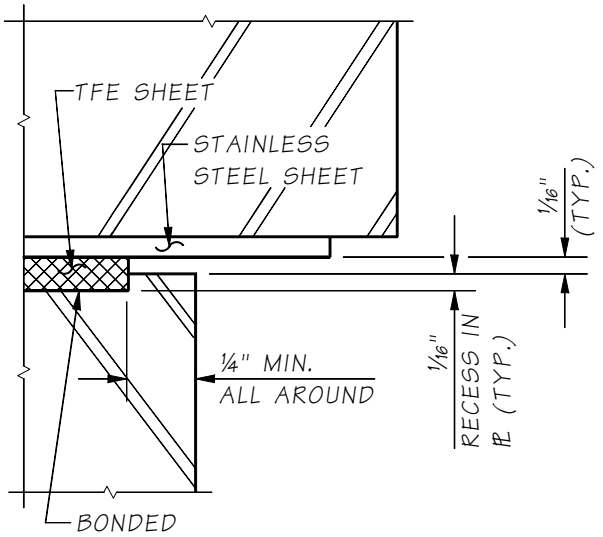

TYPICAL STEEL DETAIL

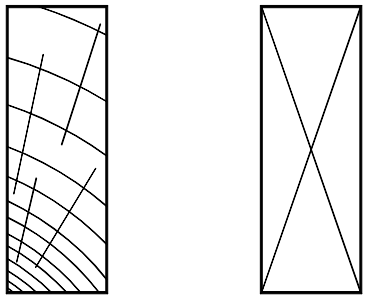

TYPICAL TIMBER DETAIL

Appendix 11.1-A3

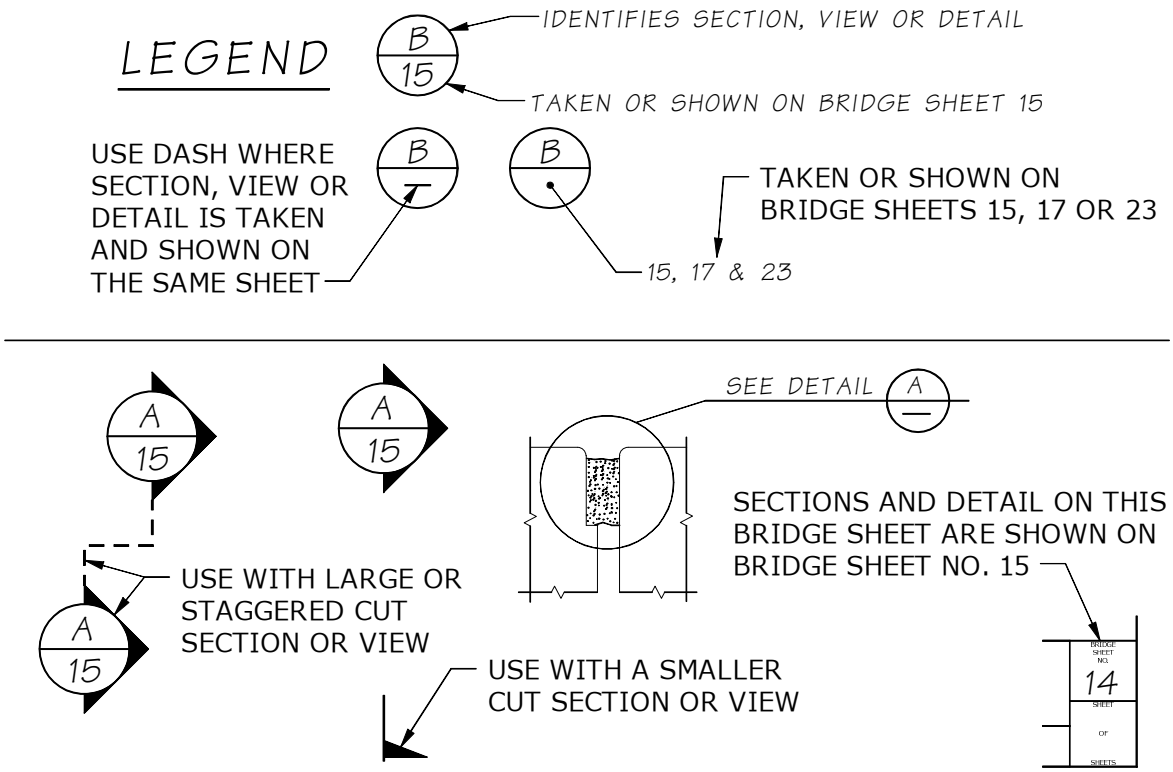

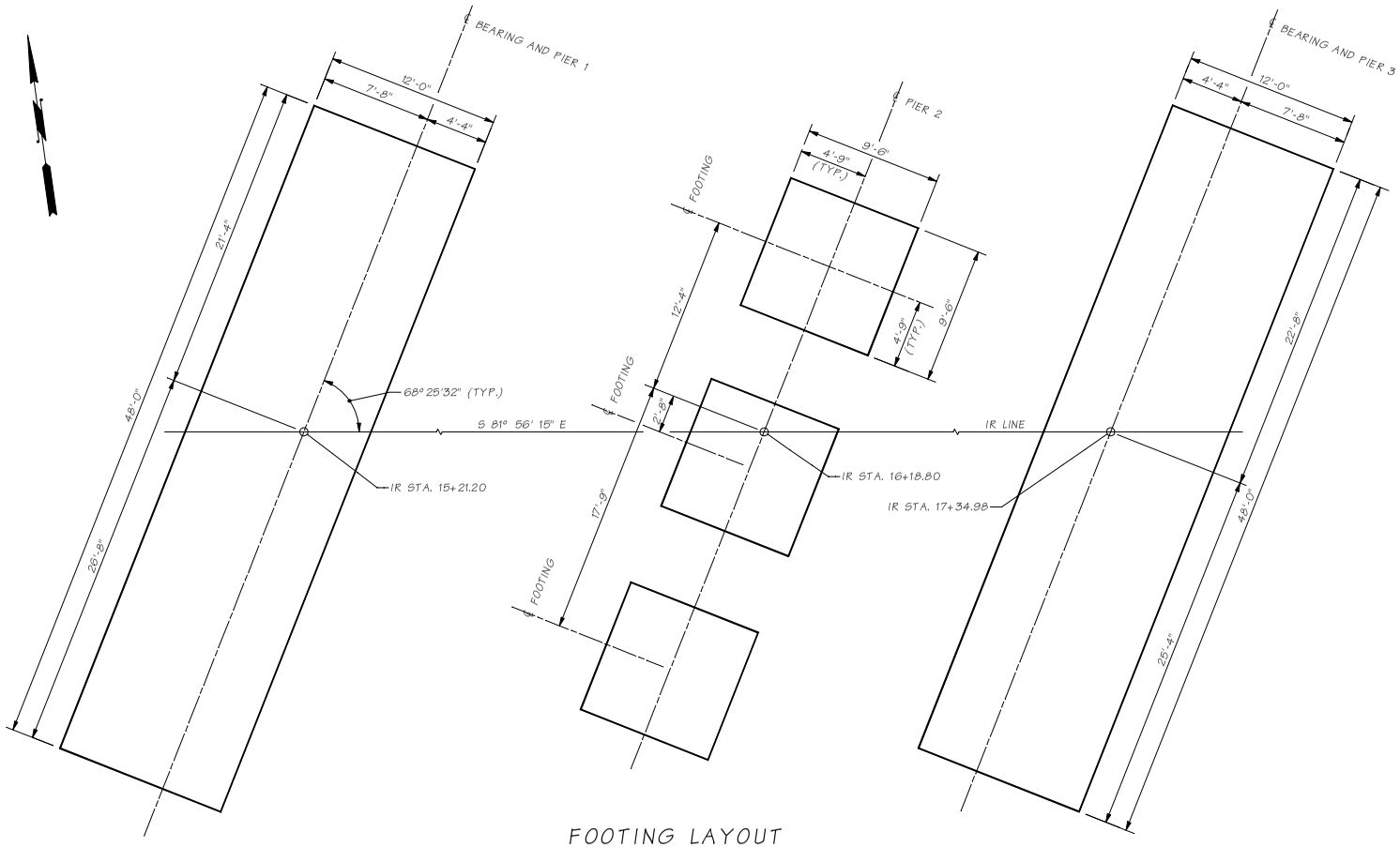

FOOTING LAYOUT

Figure 11.1-A4-1

Bridge Design Engr.					REGION NO.	STATE	FED. AID PROJ. NO.	SHEET NO.	TOTAL SHEETS	BRIDGE AND STRUCTURES OFFICE	Washington State Department of Transportation
Supervisor					10	WASH.					
Designed By					JOB NUMBER						
Checked By											
Detailed By											
Bridge Projects Engr.											
Prelim Plan By											
Architect/Specialist	DATE	REVISION	BY	APP'D							

BRIDGE SHEET NO. ____ SHEET ____ OF ____ SHEETS

FOOTING LAYOUT

SR ____ JOB NO. ____ SHEET ____

Chapter 12 Quantities, Costs & Specifications Contents

12.1	**Quantities - General**		12.1-1
	12.1.1	Cost Estimating Quantities	12.1-1
	12.1.2	Not Included in Bridge Quantities List	12.1-1
12.2	**Computation of Quantities**		12.2-1
	12.2.1	Responsibilities	12.2-1
	12.2.2	Procedure for Computation	12.2-1
	12.2.3	Data Source	12.2-2
	12.2.4	Accuracy	12.2-2
	12.2.5	Excavation	12.2-2
	12.2.6	Shoring or Extra Excavation, Class A	12.2-6
	12.2.7	Piling	12.2-8
	12.2.8	Conduit Pipe	12.2-8
	12.2.9	Private Utilities Attached To Bridge Structures	12.2-9
	12.2.10	Drilled Shafts	12.2-9
12.3	**Construction Costs**		12.3-1
	12.3.1	Introduction	12.3-1
	12.3.2	Factors Affecting Costs	12.3-1
	12.3.3	Development of Cost Estimates	12.3-2
12.4	**Construction Specifications and Estimates**		12.4-1
	12.4.1	General	12.4-1
	12.4.2	Definitions	12.4-1
	12.4.3	General Bridge S&E Process	12.4-1
	12.4.4	Reviewing Bridge Plans	12.4-3
	12.4.5	Preparing the Bridge Cost Estimates	12.4-4
	12.4.6	Preparing the Bridge Specifications	12.4-4
	12.4.7	Preparing the Bridge Working Day Schedule	12.4-5
	12.4.8	Reviewing Projects Prepared by Consultants	12.4-6
	12.4.9	Submitting the PS&E Package	12.4-6
	12.4.10	PS&E Review Period and Turn-in for AD Copy	12.4-7

Appendix A

Appendix 12.1-A1	Not Included In Bridge Quantities List	12.1-A1-1
Appendix 12.2-A1	Bridge Quantities	12.2-A1-1
Appendix 12.3-A1	Bridge and StructuresStructural Estimating Aids Construction Costs	12.3-A1-1
Appendix 12.3-A2	Bridge and Structures Structural Estimating Aids Construction Costs	12.3-A2-1
Appendix 12.3-A3	Bridge and Structures Structural Estimating Aids Construction Costs	12.3-A3-1
Appendix 12.3-A4	Bridge and Structures Structural Estimating Aids Construction Costs	12.3-A4-1
Appendix 12.4-A1	Special Provisions Checklist	12.4-A1-1
Appendix 12.4-A2	Bridge and Structures Structural Estimating Aids Construction Time Rates	12.4-A2-1

Appendix B

Appendix 12.3-B1	Cost Estimate Summary	12.3-B1-1
Appendix 12.4-B1	Construction Working Day Schedule	12.4-B1-1

Chapter 12 Quantities, Costs & Specifications

12.1 Quantities - General

The quantities of the various materials and work items involved in the construction of a project that includes bridges and structures are needed for establishing the estimated cost of the project throughout the design process, and for establishing a basis for comparison of the contractor's bids.

12.1.1 Cost Estimating Quantities

Quantities for establishing cost estimates are often necessary during various stages of project development and are required at the completion of the Bridge PS&E. These quantities should be calculated from the best information available at the time, see Section 12.2.3. The policy regarding the preparation of quantity calculations is as follows:

A. Conceptual Stage

During the conceptual stage of a project, estimated quantities may be required to arrive at an estimated cost. The need for conceptual stage quantities will be determined by the Bridge Projects Unit.

B. Preliminary Plan Stage

Upon completion of the preliminary plan, estimated quantities may be required to arrive at an estimated cost. The need for preliminary plan stage quantities will be determined by the Bridge Projects Unit.

C. Design Stage

If requested, quantity calculations shall be made, reviewed, and submitted to the Bridge Projects Unit by the Bridge Design Unit as the design progresses. The first submittal of estimated quantities shall be made as soon as the major dimensions of the structure are determined. As refinements in the design are made, quantities varying more than 10 percent from those previously submitted shall be resubmitted.

D. Final Contract Quantities

Upon completion of structural design and plans, the quantities of materials and work items involved in the construction of the project shall be computed,. see Sections 12.2.2 and 12.2.4.B.

12.1.2 Not Included in Bridge Quantities List

Items of work which appear in the bridge plan sheets, but for which details, specifications, and quantities are not included in the Bridge PS&E, shall be listed in the "Not Included in Bridge Quantities List" (Form 230-038 and Appendix 12.1-A1). This list is required for every bridge, even if no items of work are shown in the Plans that are in this category. (In this case, fill out the bridge information at the top of the form and write "NONE" across the form.) This form is transmitted to the Region Design PE Office with all Preliminary Plan submittals, all Bridge PS&E distributions, and at various milestone points during the design process, to ensure that the responsibility for all PS&E items is clear. Particular care shall be taken in the preparation of this list as omissions can result in an incomplete project PS&E with missing information for work items, or conflicting overlapping information for work items.

12.2 Computation of Quantities

12.2.1 Responsibilities

A. Design Unit

The Design Unit is responsible for calculating quantities required for cost estimates for Preliminary Plans prepared in Design Units, calculating preliminary quantities at various milestones during the design process, and calculating quantities for the final Bridge PS&E. The Design Unit is responsible for notifying the Region Design PE Office and the Bridge Projects Unit whenever structural design changes and alterations are made to the design features and quantities which affect the cost of the structure, especially following the distribution of the initial Preliminary Plan.

B. Bridge Projects Unit

The Bridge Projects Unit is responsible for computing quantities for conceptual stage cost estimates, and cost estimates for Preliminary Plans prepared in the Bridge Projects Unit. The Bridge Projects Unit is responsible for ensuring that the quantities listed in the AD Copy Bid Proposal correspond to those received from the Design Unit.

12.2.2 Procedure for Computation

Quantities are to be computed and checked independently. The designer/originator and checker shall separately summarize their calculated quantities on the "Bridge Quantities" Form 230-031 (See Appendix 12.2-A1) in the units shown thereon. The two summaries shall be submitted to the Design Unit Supervisor for comparison. The designer/originator and checker shall use identical breakdowns for each quantity. For example, the designer/originator's quantities for excavation for each of Piers 1, 2, and 3 should be compared separately against the corresponding quantities made by the checker.

When the desired accuracy is achieved, a Supervisor's Bridge Quantities form shall be prepared and submitted to the Bridge Projects Unit along with the Pre-Contract Review Bridge Plans review set. (This form is the same as previously mentioned except that it is labeled "Supervisor's Bridge Quantities" and is completed by the unit supervisor or designee. If the unit supervisor elects, the designer/originator's or the checker's Bridge Quantities form may be designated as "Supervisor's Bridge Quantities.") This form is used by the Bridge Projects Unit to prepare the final bridge cost estimate.

All quantity calculations and bridge quantities forms are to be filed in the job file for the structure or the PS&E file for the project. All subsequent revisions shall be handled in the same manner as the original quantities. On the "Bridge Quantities" form, any revision to the original figure should not be erased but crossed out and replaced by the new figure using a different colored pencil. If there are too many revisions, the old summary sheet should be marked void, left in the file, and a new sheet made out, marked "Revised," dated, and the original forwarded to the Bridge Projects Unit.

Mistakes in quantities can be very costly to Contracting Agency. The designer/originator and checker must account for all items of work on the "Bridge Quantities" form, and must also be careful to enter an item of work only once (e.g., concrete or steel rebar in the superstructure should not be entered both in the lump sum superstructure breakdown and in the unit bid item quantity).

12.2.3 Data Source

Quantities of materials for use in preliminary cost estimates can often be obtained from the quantities calculated for previous similar designs. This information is available from the Bridge Projects Unit.

12.2.4 Accuracy

A. Preliminary Quantities

Quantities used for cost estimates prepared during the conceptual stage of the design are expected to have an accuracy of + 10 percent. The first iteration of quantities, after the preliminary plan has been completed, is expected to have an accuracy of + 5 percent.

B. Final Quantities

Final quantities in the Bridge PS&E submittal, including bar list quantities, to be listed in the Special Provisions and Bid Proposal sheet of the AD Copy, are to be calculated to have an accuracy of + 1 percent.

12.2.5 Excavation

A. Structure Excavation, Class A

Excavation necessary for the construction of bridge piers and reinforced concrete retaining walls is classified as Structure Excavation, Class A (see the definition as specified in *Standard Specification* Section 2-09.3(2)). Payment for such excavation is generally by volume measurement. The quantity of excavation to be paid for is measured as specified in *Standard Specification* Section 2-09.4, and computation of this quantity shall conform to these specifications. If the construction circumstances for the project require structure excavation limits that do not conform to the *Standard Specification* definition, then the modified structure excavation limits shall be shown in details in the Plans.

Structure excavation for footings and seals shall be computed using a horizontal limit of 1 foot 0 inches outside and parallel to the neat lines of the footing or seal or as shown in the Plans. The upper limit shall be the ground surface or stream bed as it exists at the time the excavation is started. See Figure 12.2.5-1(A), (B), and (C).

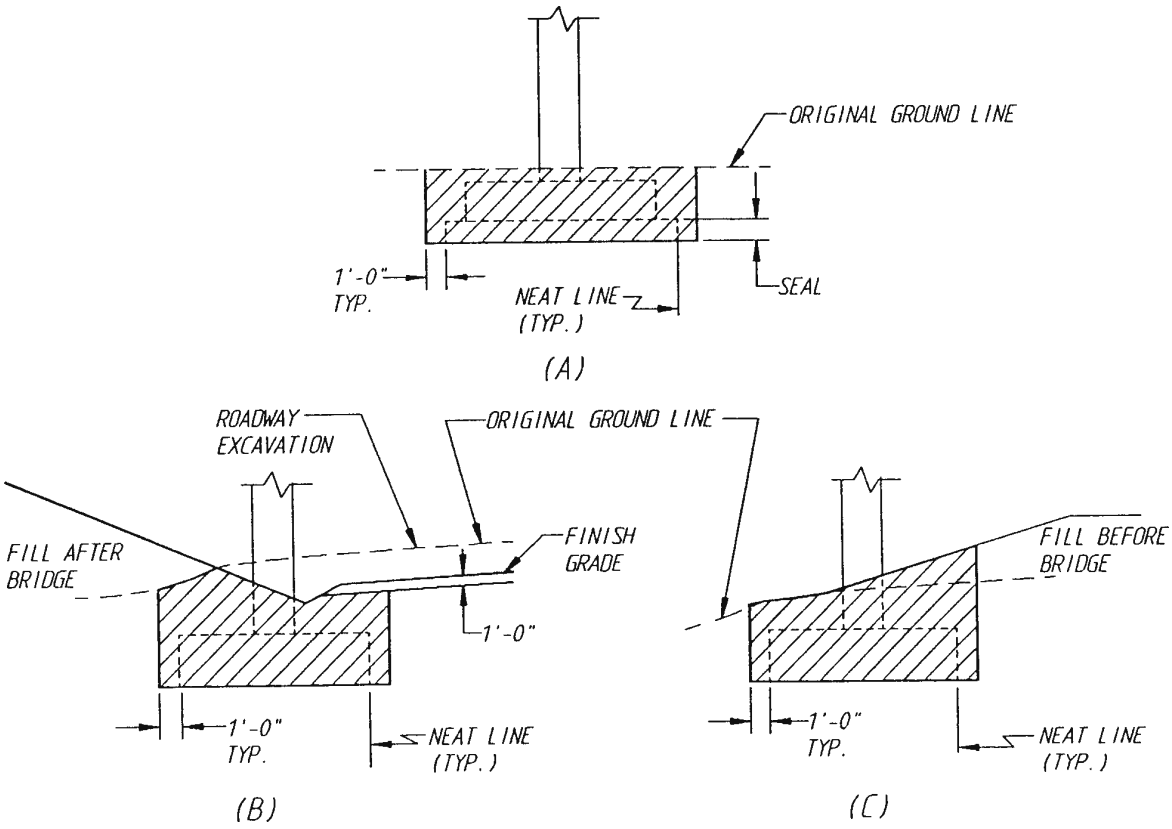

Figure 12.2.5-1

Structure excavation for the construction of wing walls shall be computed using limits shown in Figure 12.2.5-2.

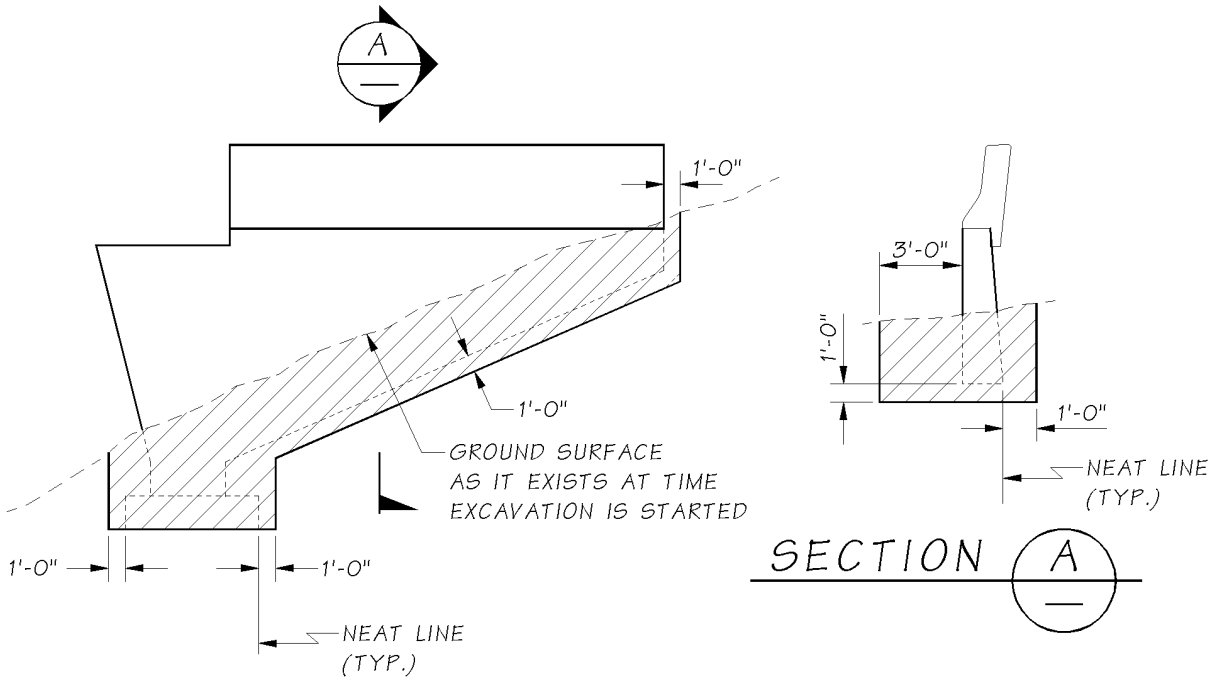

Figure 12.2.5-2

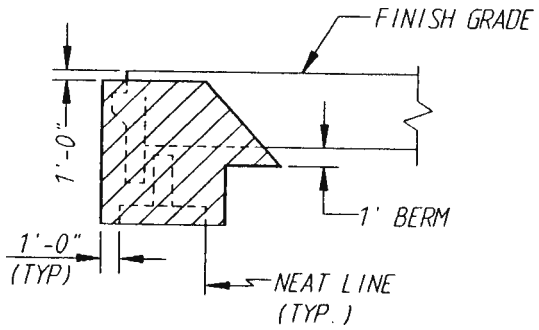

Figure 12.2.5-3

When bridge approach fills are to be constructed in the same contract as the bridge, and the foundation conditions do not require full height fills to be placed prior to the construction of the pier, the approach fill is constructed in two stages, i.e., constructed up to the bottom of footing or 1 foot above the bottom of footing, and then completed after the bridge construction. (The Materials Laboratory Geotechnical Services Branch shall be consulted on the staging method.) The structure excavation shall be computed from the top of the first stage fill.

The bottom of a spread footing will be placed 1 foot 0 inches below the top of the first stage fill. See Figure 12.2.5-4(A). The bottom of footings supported on piling will be placed at the top of the first stage fill; therefore no structure excavation is required (see Figure 12.2.5-4(B)).

The limits for stage fills shall be shown in the Plans with the structure excavation, if any.

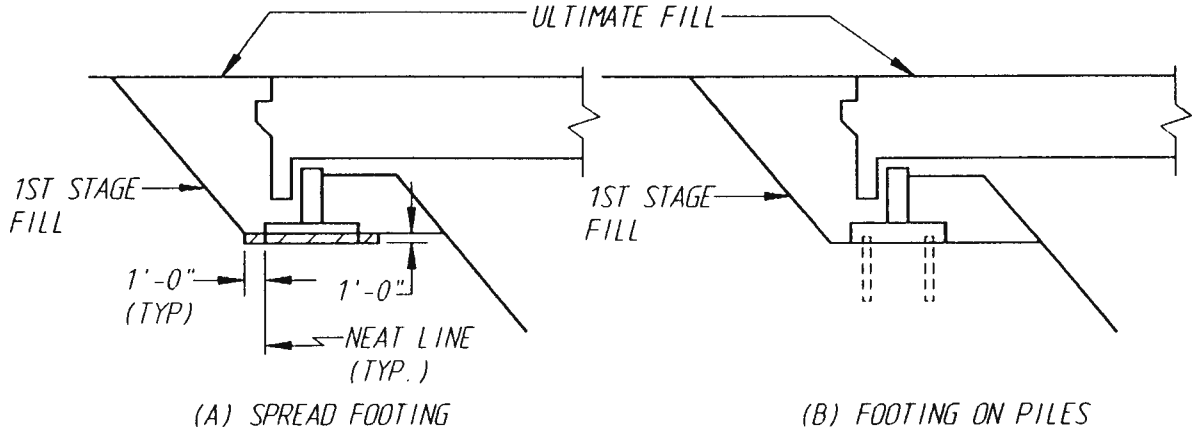

Figure 12.2.5-4

Prior to pier construction, when (1) a full height fill with or without surcharge is required for settlement, or (2) the original ground line is above the finish grade line, the upper limit of structure excavation shall be computed to 1 foot 0 inches below the finish grade (pavement) line (see Figure 12.2.5-5).

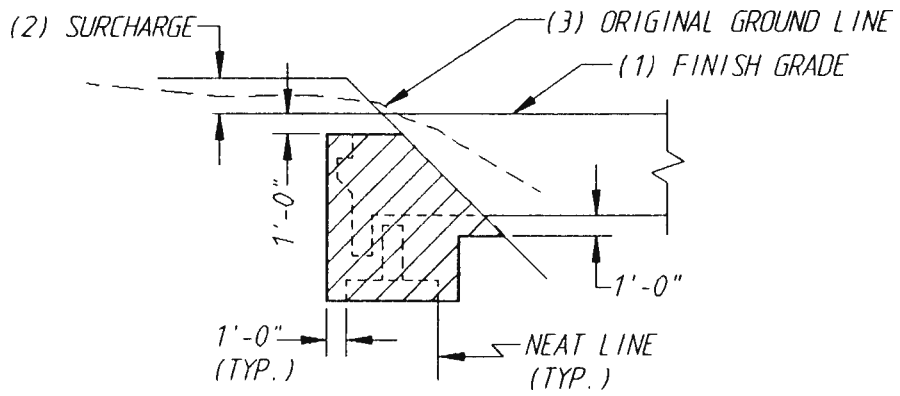

Figure 12.2.5-5

B. Special Excavation

The excavation necessary for placement of riprap around bridge piers is called Special Excavation (see Figure 12.2.5-6).

Special excavation shall be computed from the top of the seal to the existing stream bed or ground line along the slopes indicated in the Plans. Special excavation will only include excavation outside the limits of structure excavation.

The limits for special excavation shall be shown in the Plans.

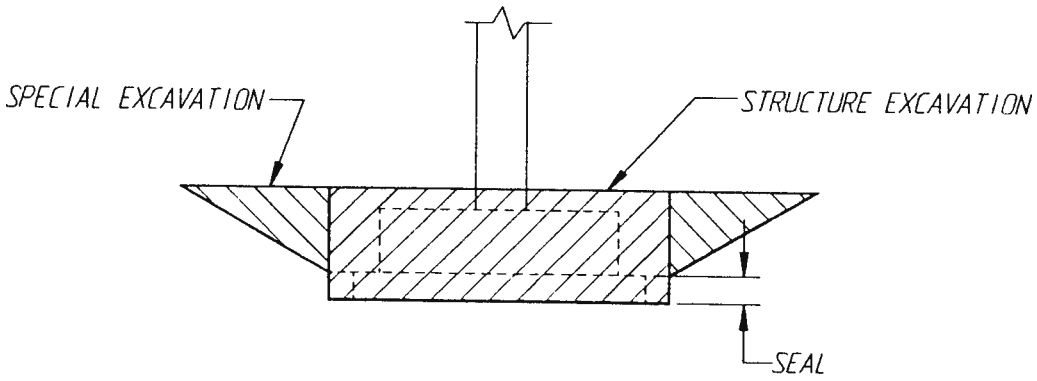

Figure 12.2.5-6

C. Shaft Excavation

Excavation necessary for the construction of shaft foundations is measured by volume and paid for at the unit contract price per cubic yard or cubic meter for "Soil Excavation For Shaft Including Haul."

The usual limits for computing shaft excavation shall be the neat lines of the shaft diameter as shown in the Plans, the bottom elevation of the shaft as shown in the Plans, and the top of the ground surface, defined as the highest existing ground point as shown in the Plans within the shaft diameter.

The methods of measurement and payment and the limits for shaft excavation shall be specified in the Special Provisions.

12.2.6 Shoring or Extra Excavation, Class A

Shoring, cofferdams or caissons, or extra excavation required for construction of bridge footings and reinforced concrete retaining walls constructed in the wet or dry is classified as Shoring or Extra Excavation, Class A. See *Standard Specification* Section 2-09.3(3).

Structural shoring (for dry excavation) or cofferdams (for wet excavation) is required for all excavations near completed structures (foundations of bridges, walls, or buildings), near underground utilities, near railroad tracks, and near pavement. All other excavation four feet or more in depth shall be either shored with structural shoring or cofferdams, or shall meet the open-pit excavation requirements as specified in *Standard Specification* Section 2-09.3(3)B.

For the purpose of estimating the cost for shoring or extra excavation, Class A, it is necessary to compute the peripheral area of an assumed sheet pile enclosure of the excavated area.

While payment for Shoring or Extra Excavation, Class A, is made at a lump sum contract price, the costs are a function of the overall height of excavation. In general, each side of the excavation for each pier shall be categorized into an average overall height range as shown on Form 230-031 (i.e., less than 6 feet, 6 to 10 feet, 10 to 20 feet, or greater than 20 feet), the area for the side computed using the appropriate width times the average overall height, the overall area for the side shall be entered in the category that matches the side's average overall height. These calculations are required for each pier of the bridge as applicable. See accompanying Figure 12.2.6-1 and sample calculation.

For excavation in the dry, the peripheral area shall be the perimeter of the horizontal limits of structure excavation times the height from the bottom of the footing to the ground surface at the time of excavation.

For excavation in water, the peripheral area shall be the perimeter of the horizontal limits of structure excavation times the height from the bottom of the seal to 2 feet above the seal vent elevation.

For shaft-type excavations, it is not normally necessary to compute the area for shoring because the shoring is usually accommodated by the work items for permanent casing, temporary casing, and casing shoring.

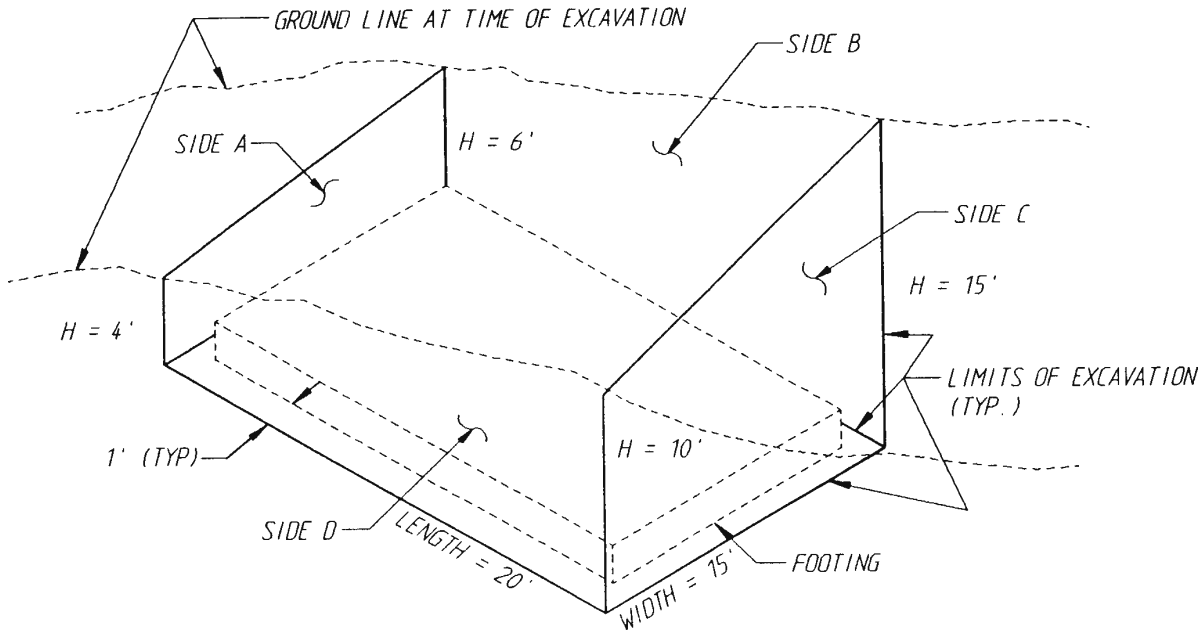

Figure 12.2.6-1

Sample Calculation:

For this pier (Figure 12.2.6-1):

Side A: average height = (4 + 6)/2 = 5 feet
width = 15 feet
area = 5 X 15 = 75 square feet

Side B: average height = (6 + 15)/2 = 10.5 feet
width = 20 feet
area = 10.5 X 20 = 210 square feet

Side C: average height = (10 + 15)/2 = 12.5 feet
width = 15 feet
area = 12.5 X 15 = 187.5 square feet

Side D: average height = (4 + 10)/2 = 7 feet
width = 20 feet
area = 7 X 20 = 140 square feet

For this example

height category	***area***
less than 6 feet	75 square feet
6 feet to 10 feet	140 square feet
10 feet to 20 feet	210 + 188 = 398 square feet
greater than 20 feet	N.A.

These numbers would be entered on Form 230-031 as follows:

Std. Item No. 4012	**Item Use** Std. Item		**Item Description** Shoring or Extra Excavation, Class A Dry: Average Overall Height		**Quant.** (Enter Total for Bridge Here)		**Unit of Meas.** L.S.	
Pier	6 ft.		6 ft. to 10 ft.		10 ft.* to 20 ft.		20 ft.	S.F.
Example	75	S.F.	140	S.F.	398 (11.5*) S.F.	S.F.	—	S.F.
		S.F.		S.F.		S.F.		S.F.
		S.F.		S.F.		S.F.		S.F.
		S.F.		S.F.		S.F.		S.F.

* Indicate Average Height

12.2.7 Piling

The piling quantities are to be measured and paid for in accordance with *Standard Specification* Sections 6-05.4 and 6-05.5. Computation of piling quantities shall follow the same provisions.

Timber test piles are driven outside the structure limits and are extra or additional piling beyond the required number of production piling. See *Standard Specification* Section 6-05.3(10).

Concrete or steel test piles are driven within the structure limits and take the place of production piling. In this case, the quantities for number and length of production piling is reduced by the number and length of test piling.

The quantity for "Furnishing _____ Piling _____" is the linear measurement of production piling below cut-off to the "estimated" pile tip (not "minimum" tip) specified in the Geotechnical report. (Does not include test piles.)

The quantity for "Driving _____ Pile _____" is the number of production piling driven. (Does not include test piles.)

Pile tips are required if so specified in the Geotechnical report. The tips on the test piles are incidental to the test pile; therefore, the number of pile tips reported on the Bridge Quantities Form 230-031 should not include the number of pile tips required on the test piles.

12.2.8 Conduit Pipe

It is WSDOT practice to embed two 2-inch diameter conduit pipes in all exterior concrete barriers constructed on bridges and retaining walls. The only exceptions to this practice are inside barriers of side-by-side twin bridges, and other project specific locations with the approval of the Bridge Design Engineer. Only WSDOT electrical systems may use these conduit pipes. Conduit pipes for other private utilities cannot be embedded in structure elements, and must be otherwise suspended or attached to the structure, in accordance with the franchise lease agreement negotiated between the private utility and the Region's Utility Engineer.

In accordance with *Standard Specification* Section 8-20.1(1) and RCW 19.28.161, conduit pipe installation work is considered electrical work that can only be performed by licensed electricians. As such, conduit pipe quantities can only be included in electrical work bid items, such as electrical lump sum bid items for "Illumination System", "Traffic Signal System", and "Communication System", or stand-alone unit contract bid items for "Conduit Pipe 2 In. Diam." Conduit pipe quantities **cannot** be made incidental to structural bid items such as "Superstructure", "Traffic Barrier", "Pedestrian Barrier", etc.

For bridges and retaining walls in projects that also include other electrical system work for illumination, traffic signals, and ITS systems, the conduit pipes and their associated junction boxes shall be included in the lump sum bid item cost estimates for the appropriate electrical system lump sum bid item.

For bridge and retaining walls in projects without any electrical system work (e.g., the conduit pipes are isolated and will exist initially as spares), the conduit pipe quantity shall be calculated for "Conduit Pipe 2 In. Diam", per linear foot. The measurement shall be the sum of all conduit pipe through the barriers and into the ground mounted junction boxes buried off the ends of the bridge corners as shown in the traffic barrier standard details. Each conduit pipe shall terminate in a separate junction box as shown in these details.

12.2.9 Private Utilities Attached To Bridge Structures

As mentioned above, conduit pipes for private utilities cannot be embedded in structure elements, and must be otherwise suspended or attached to the structure, in accordance with the franchise lease agreement negotiated between the private utility and the Region's Utility Engineer.

Because attachment of private utilities to bridge structures are subject to franchise lease agreements, the construction costs for furnishing and installing these utilities, including all associated supports, need to be kept separate from other bid items. The only portion of the utilities and their supports that can be made incidental to structure bid items, such as "Superstructure" and "Roadway Deck" are the concrete inserts cast into the deck slab of the bridge. All other quantities for the private utilities, including the support rods, braces, and conduit pipes, shall be included in the associated bid item(s) established for each separate private utility, whether as a lump sum bid item, or measured by linear measurement. These separate bid item(s) for these private utilities are the responsibility of the Design PE Office.

The same practice applies to WSDOT conduit pipes when such conduit pipes for ITS or other systems are suspended or attached to the structure. Other than the concrete inserts for support of such WSDOT conduit pipes, all other quantities for external WSDOT conduit pipe systems shall be included in the appropriate WSDOT electrical system lump sum bid item, under the responsibility of the Design PE Office or the Region Traffic Design Office.

12.2.10 Drilled Shafts

Soil excavation for shaft including haul is measured by the cubic yards of shaft excavated. The cubic yards shall be calculated based on the shaft diameter shown in the Plans, the top of shaft soil excavation, as defined below, and the bottom elevation shown in the plans, less all rock excavation as defined below.

The top of shaft soil excavation shall be defined as the highest existing ground point within the shaft diameter. For shafts where the top of shaft is above the existing ground line and where the Plans show embankment fill placed above the existing ground line to the top of shaft and above, the top of shaft soil excavation shall be defined as the top of shaft. Excavation through embankment fill placed above the top of shaft shall not be included in the quantity.

Rock excavation for shaft including haul is measured by the cubic yards of shaft excavated. The cubic yards shall be calculated based on the shaft diameter shown in the Plans, the top of rock line, defined as the highest bedrock point within the shaft diameter, and the bottom elevation shown in the Plans.

Furnishing and placing temporary casing is measured by the linear feet of required temporary casing installed within the limits shown in the Plans and as required by the geotechnical report.

Furnishing permanent casing is measured by the linear feet of required permanent casing installed within the limits shown in the Plans and as required by the geotechnical report. For piers with a steel reinforcing bar splice zone between the shaft and the column or pier, permanent casing is required, at a minimum, from the top of shaft to 2'-0" below the construction joint at the base of the splice zone.

Placing permanent casing is measured per each for each permanent casing placed.

Casing shoring is measured by the linear feet of casing shoring installed. The linear feet dimension shall be computed using either the top of casing shoring, defined as the highest existing ground point within the casing shoring, or the specified shaft seal vent elevation as shown in the Plans, whichever is higher, and the bottom elevation, which is typically coincident with the top of shaft elevation.

CSL access tube is measured by the linear foot of tube installed. One access tube is required for each foot of shaft diameter, rounded to the nearest whole number. The number of access tubes for shafts of X'-6" diameter shall be rounded up to the next highest whole number. The length dimension of each access tube shall be from 2'-0" above the top of shaft elevation, to the bottom of shaft elevation.

12.3 Construction Costs

12.3.1 Introduction

The construction costs itemized in Appendix 12.3-A1, 12.3-A2, 12.3-A3, and 12.3-A4 are to aid the user in estimating the cost of bridge and structure projects. The costs are based on historical data maintained by the Bridge and Structures Office and retrieved from recent WSDOT Contracts.

Requests for cost estimates from WSDOT Region offices and other Local Agency offices should be submitted in writing (hard copy or e-mail) to the Bridge Projects Unit, and a written or e-mail response will be returned within a reasonable time based on the schedule needs of the requesting office. Scoping or prospectus type cost estimates, and other cost estimates based upon deck area cost history and other readily available geotechnical information and project parameters can be prepared relatively quickly. Estimates requiring input from the Bridge Design Unit, either for preparation of preliminary quantities or other preliminary structural analysis will take longer to prepare.

Telephone requests for cost estimates from WSDOT Region offices and other Local Agency shall be referred to the Bridge Projects Unit for response.

All cost estimates prepared by the Bridge and Structures Office should have the concurrence of the Bridge Projects Engineer.

12.3.2 Factors Affecting Costs

A. Type of Structure

Many factors, as outlined in Section 2.2.3, must be considered in the selection of the type, size, and location of a bridge or wall.

Common structures with conventional details will be within the low end and mid-range of costs. Unique or complex structures will be within the high end.

B. Location of Project Site

Projects in remote areas or with difficult access will generally be within or above the high end of the cost range.

C. Size of Project Contract

Small projects tend to be within the high end of the cost range while large projects tend to be within the low end of the cost range.

D. Foundation Requirements

Foundation requirements greatly affect costs. Water crossings requiring pier construction within the waterway are generally very expensive. Scour requirements can push the costs even higher. The earlier foundation information can be made available the more accurate the cost estimate will be. The Bridge Projects Unit should be made aware of unusual foundation requirements or changes to foundation type as soon as possible for updating of the estimate.

E. Sequencing of Project

Projects with stage construction, detours, temporary construction, etc., will be more expensive.

12.3.3 Development of Cost Estimates

Estimates prepared by the Bridge and Structures Office shall include 10 percent mobilization but not sales tax, engineering, construction contingencies, or inflation.

A. Types

1. Prospectus and Project Summary Estimates

   Conceptual cost estimates are prepared when little information about the project is available. Use the construction costs in Appendix A, assuming the worst case conditions, unless actual conditions are known. An example of a worst case condition is deep foundation substructure (pile supported footings or shaft foundations). In remote areas, or for small projects, use the high end of the cost range. Use mid-range costs for usual conditions.

   To cover unforeseen project modifications, add a 20 percent estimate contingency to a prospectus estimate and a 10 percent estimate contingency to a project summary estimate. These contingencies can be adjusted depending on the preliminary information available.

2. Preliminary Design Estimates

   Preliminary design estimates are prepared during the preliminary design stage when the type and size of bridge is known. Limited foundation information is sometimes available at this stage. The construction costs in Appendix A shall be used with an appropriate inflation factor, assuming the worst case conditions, unless foundation conditions are known, along with a minimum of 10 percent contingency to cover scope creep.

3. Estimate Updates During Design

   During the design period, the designer should keep the Bridge Projects Unit informed of significant changes to the design that might affect the cost. Examples of significant changes are: deeper than expected footing and seals, use of deep foundations (shafts or piles) when none were previously expected, change of substructure types, and changes to superstructure. This is a critical element in the project budgeting process.

4. Contract Estimates

   The contract estimate is prepared by the Bridge Projects Unit after the Plans and Final Quantities have been submitted to the Bridge Projects Unit for preparation of the final Bridge PS&E. The contract estimate is prepared using the quantities furnished by the Bridge Design Unit, unit bid prices from Appendix A, other historical data, and the judgment of the engineer preparing the estimate. Unique, one-of-a-kind projects require special consideration and should include an appropriate construction cost contingency.

B. Responsibilities

1. Bridge Projects Unit

   The Bridge Projects Unit is responsible for preparing the prospectus, project summary, preliminary, and final contract estimates and updating the preliminary estimate as needed during the design phase of the project.

   The Bridge Projects Unit assists the WSDOT Region offices and other outside Local Agency offices, such as counties and cities, to prepare prospectus and project summary estimates when requested in writing.

2. Designer

   The designer is responsible for providing preliminary quantities and final quantities to the Bridge Projects Unit to aid in the updating of preliminary estimates and the preparation of contract estimates.

C. Documentation

Whenever a cost estimate is prepared by the Bridge and Structures Office for an outside office, a Cost Estimate Summary sheet (Form 230-040 and Appendix 12.3-B1) shall be filled out by the Engineer preparing the estimate. The Cost Estimate Summary shall be maintained in the Job File. During the design stage, the summary sheet shall be maintained by the Bridge Design Unit. At a minimum, the Cost Estimate Summary should list the initial and all subsequent cost estimates for each Preliminary Plan distribution made. It is the design unit supervisor's responsibility to ensure the summary sheet is up to date when the job file is submitted to the Bridge Projects Unit for preparation of the Bridge PS&E.

D. Cost Data

1. General

The Bridge costs summarized in Appendix A represent common highway, railroad, and water crossings. Consult the Bridge Projects Unit for structures spanning across large rivers or canyons and other structures requiring high clearances or special design and construction features.

The square foot costs are useful in the conceptual and preliminary design stages when details or quantities are not available. The various factors affecting costs as outlined in BDM Section 12.3.2 must be considered in selecting the square foot cost for a particular project. As a general rule, projects including none or few of the high-cost factors will be close to the mid-range of the cost figures. Projects including many of the high-cost factors will be on the high side. The user must exercise good judgment to determine reasonable costs. During the preliminary stage, it is better to be on the prudently conservative side for budgeting purposes.

2. Deck or Wall Face Area

The area to be used for cost estimates based upon deck or wall face area shall be computed as follows:

Bridge Widenings and New Bridges

The deck area of bridges is based on the actual width of the new portion of the roadway slab constructed (measured to the outside edge of the roadway slab) times the length, measured from end of wingwall to end of wingwall, end of curtain wall to end of curtain wall, or back to back of pavement seat if there are no wingwalls or curtain walls. Wingwalls are defined as walls without footings which are cast monolithically with the bridge abutment wall and may extend past the abutment footing. Curtain walls are defined as walls that are cast monolithically with the bridge abutment wall and footing and only extend to the edge of footing.

Bridge Rail Replacement

The bridge rail and curb removal is based on the total length of the rail and curb removed.

Bridge Lengths With Unequal Wingwalls

If a bridge has wingwalls or curtain walls of unequal length on opposite sides at a bridge end of wingwalls or curtain walls on one side of a pier only, the length used in computing the square foot area is the average length of the walls. If the wingwalls are not parallel to the centerline of the bridge, the measurement is taken from a projected line from the end of the wingwall normal to the centerline of the roadway.

Retaining Walls

If retaining walls (walls that are not monolithic with the abutment) extend from the end of the bridge, the cost of these walls is computed separately. The area of the wall is based on the overall length of the wall, and the height from the top of footing to the top of the wall.

12.4 Construction Specifications and Estimates

12.4.1 General

The Bridge Projects Unit prepares the specifications and estimates (S&E) for all structural projects designed or reviewed by the Bridge and Structures Office. The preparation includes distributing review sets, reviewing the job file, plans, PS&E check list, "Not Included in Bridge Quantities List," and Geotechnical report; preparing the cost estimates, specifications, and working day schedules; and submitting the PS&E package to the Region.

12.4.2 Definitions

A. *Standard Specifications*

The *Standard Specifications* for Road, Bridge and Municipal Construction is published biannually by the WSDOT Engineering Publications Office, is maintained by the WSDOT Construction Office, and is used as the governing construction specification for all WSDOT construction projects.

B. Amendments

Amendments are revisions to specific sections of the *Standard Specifications*, which are approved and enacted during the two year period that a specific edition of the *Standard Specifications* is in force. Amendments are published normally three times during a calendar year – April, August, and December.

C. Special Provisions

Special Provisions are supplemental specifications and modifications to the *Standard Specifications*, including Amendments, which apply to a specific project.

D. Addendum

A written or graphic document, issued to all bidders and identified as an addendum prior to bid opening, which modifies or supplements the bid documents and becomes a part of the contract.

E. AD Copy

The AD copy is the contract document advertised to prospective bidders. The AD Copy may include, but not be limited to, the following as component parts: Bid Proposal Form, Special Provisions, Amendments, Plans, and Appendicies including test hole boring logs, and environmental permit conditions.

F. As defined in *Standard Specification* Section 1-02.4, the order of precedence of AD Copy components is as follows: Addenda, Bid Proposal Form, Special Provisions, Plans, Amendments, *Standard Specification*s, and Standard Plans.

12.4.3 General Bridge S&E Process

A. Typical Reviews and Milestone Dates

The Ad Date, as established by the Region, is the anchor for all project schedule dates.

The Bridge PS&E turn-in date is the date the Bridge PS&E package is due to the Region, and serves to note the beginning of the PS&E review period. Typically, the Bridge PS&E turn-in date is ten weeks prior to the scheduled Ad Date. When a longer PS&E review period is desired by the Region, the Bridge PS&E turn-in date can be as much as 12 to 14 weeks prior to the scheduled Ad Date.

The Bridge Plans (PS&E Presubmittal) turn-in date is the date the Bridge Plans are due to the Bridge Projects Unit from the Bridge Design Unit or Bridge Consultant assigned to the project, and serves to note the beginning of the Bridge S&E preparation period. Typically, the Bridge Plans turn-in date is four weeks prior to the scheduled Bridge PS&E turn-in date.

For some projects, the Region may schedule Constructability Reviews at times prior to the scheduled Bridge Plans turn-in date. These Constructability Reviews typically include plan sheets as developed to date, and in some cases may include draft Special Provisions. For most of the few projects with Constructability Reviews, the coordination of submittals and reviews will be through the specific Bridge Design Unit involved. However, if the Constructability Review requires Special Provisions, the Bridge Projects Unit should be included in the process.

For hydraulic, mechanical, and electrical rehabilitation projects for movable bridges, the Bridge Preservation Office takes a lead role in managing the design process for the project. These projects will typically include additional review periods similar to those described above for Constructability Reviews.

B. Bridge Plans Distribution

Once the Bridge Projects Unit receives the Bridge Plans (PS&E Presubmittal) from the Bridge Design Unit or Bridge Consultant assigned to the project, the Bridge Scheduling Engineer will assign the project to a specific Bridge Specifications and Estimates Engineer, and will create a Bridge PS&E file for the project.

The Bridge Specifications and Estimates Engineer will distribute the Bridge Plans, along with a Not Included in Bridge Quantities List, under a cover letter addressed to the Region Design Project Engineer (Olympic and Northwest Regions) or Region Project Development Engineer (all other Regions). The distribution list also includes the FHWA Washington Division Bridge Engineer, WSDOT Bridge Construction Engineer, and the Region Project Development and Region Plans Engineer (except for Olympic Region).

For new bridges and bridge widenings, internal Bridge and Structures Office distribution includes the Bridge Design Engineer, Bridge Projects Engineer, and the Bridge Design Unit Supervisor. The Bridge Plans may be distributed to other offices such as the Materials Laboratory Geotechnical Services Branch and the Bridge Preservation Office depending on the scope of the project and the value of the added review.

The Bridge Plan distribution will specify a due date for the return of review comments to the Bridge Specifications and Estimates Engineer. This date is typically one week prior to the scheduled Bridge PS&E turn-in date, but can be modified to suit project specific schedule considerations.

C. Bridge PS&E Development

Following the distribution of the Bridge Plans, the Bridge Specifications and Estimates Engineer will review the Bridge Plans, develop the Bridge Special Provisions and Bridge Cost Estimate, and prepare the bridge working day schedule. See Sections 12.4.4, 12.4.5, 12.4.6, and 12.4.7.

D. Bridge PS&E Distribution

At the completion of the Bridge PS&E package, or at the scheduled Bridge PS&E turn-in date, whichever comes first, the Bridge Specifications and Estimates Engineer will distribute the Bridge PS&E. The Bridge PS&E package should include the items specified in Section 12.4.9.A, and should be distributed to those identified in Section 12.4.9.B.

12.4.4 Reviewing Bridge Plans

The Bridge Specifications and Estimates Engineer performs the following tasks after receiving the Bridge Plans submittal:

A. Job File

Review correspondence and e-mails in the job file for the items of work and other commitments which need to be included in the Bridge PS&E. Identify items that need special provisions and bid item references. Identify items that require additional research by, and information from, the bridge designer, Region designers, or others. Confirm that the job file fly leaf information has been completed by the designer (Form 221-076).

B. PS&E Check List (Form 230-037 and Appendix 12.4-A1)

Review the form as completed by the bridge designer for identified needs for special materials, construction requirements, permits, etc., which may need Special Provisions such as:

- Permits: United States Coast Guard
- Agreements: utilities on bridge, etc.
- Materials: high strength structural steel, high-strength concrete, polyester and polymer concrete, carbon fiber wrap, high-load elastomeric bearing pads and other high capacity bridge bearings, etc.
- Construction Requirements: temporary access, stage construction, construction over railroad, special welding and welding inspection requirements, and other special construction requirements
- Special Items: modified concrete overlay or special architectural, paint, and sealer treatments
- Proprietary Materials: identification of, and justification for use of, products and materials which are specified in the Bridge Plans by specific manufacturer and model, instead of generic manufacture

C. Summary of Quantities (Form 230-031 and Appendix 12.2-A1)

Verify that the Summary of Quantities is labeled as "Supervisor's Bridge Quantities." See Section 12.2.2. Quantities listed in this form are used to develop the Bridge Cost Estimate for the project.

D. Plans

Review the plans for consistency with the special needs identified by the bridge designer in the PS&E check list form (subsection B above), use of standard notes and General Notes, completeness of title block information, and use of terminology consistent with the *Standard Specification*s, Standard Plans, and Standard Bid Items.

E. Not Included in Bridge Quantities List (Form 230-038 and Appendix 12.1-A1)

Review the form completed by the bridge designer and compare with the Bridge Plans for items shownin the Bridge Plans that may be missing from the list. See BDM Section 12.1.2.

F. Geotechnical Report

Review the Geotechnical Report for the project to confirm that the foundation types, sizes, and elevations shown in the Bridge Plans are consistent with the recommendations specified in the Geotechnical Report. Obtain a copy of the final Geotechnical Report for the S&E file. Review the Geotechnical Report for construction consideration requirements which may need to be noted in the Special Provisions, such as shaft casing requirements, bridge embankment settlement periods, special excavation, etc. Compare the number of test holes and the locations shown in the layout sheets for all bridges against number and locations of test holes identified in the final Geotechnical Report.

12.4.5 Preparing the Bridge Cost Estimates

A. General

From the quantities shown in the Summary of Quantities form submitted with the Bridge Plans, the Bridge Specifications and Cost Estimates Engineer develops the Bridge Cost Estimate for the project. The Bridge Projects Unit uses a standard spreadsheet format for Cost Estimates. This spreadsheet includes the tabulation of all bridge bid items, a breakdown for each lump sum item, and square foot cost of the structure.

B. Procedure

Each quantity shown in the Summary of Quantities form is to be matched with an appropriate unit bid item or lump sum bid item. These can be Standard Bid Items from the Standard Bid Item Table, or project specific non-standard bid items.

Pricing for the bid items above can be based on the Construction Cost Estimating Aids listed in Appendix 12.3-A1, 12.3-A2, 12.3-A3, and 12.3-A4, bid tabulations from previous contracts, and the Unit Bid Analysis and Standard Item Table listing available through the WSDOT Contract Ad & Award Office web site. The Bridge Specifications and Estimates Engineer uses appropriate engineering judgment to make appropriate adjustments for inflation, site location, quantities involved, total of the work involved, etc.

All Standard Bid Items listed in the spreadsheet shall include the Standard Bid Item number assigned to that bid item. All non-standard bid items shall be identified by the appropriate pre-qualification code for the bid item work. The pre-qualification codes specified in the Standard Item Table should be reviewed to help establish the appropriate code for non-standard bid items. When in doubt, the general Bridge and Structures pre-qualification code of (B0) should be used.

All bridge cost estimates shall include mobilization, but do not include sales tax, engineering, contingencies or inflation.

12.4.6 Preparing the Bridge Specifications

A. General

There are three categories of Special Provisions:

1. General Special Provisions (GSP's) are supplemental specifications which are standardized and approved for Statewide use by the WSDOT Construction Office. The library of GSP's is maintained by the WSDOT Design Office. GSP's are formatted to supplement specific *Standard Specification* Sections. GSP's are identified by their publication and effective date in parenthesis immediately preceding the GSP text. GSP's are published normally three times during a calendar year – April, August, and December.
2. Bridge Special Provisions (BSP's) are supplemental specifications which are standardized and approved for Statewide use by the WSDOT Bridge and Structures Office. The library of BSP's is maintained by WSDOT Bridge and Structures Office through the WSDOT Design Office. BSP's are formatted to supplement specific *Standard Specification* Sections. BSP's are identified by the acronym "BSP" followed by their publication and effective date in parenthesis immediately preceding the BSP text. BSP's are published periodically throughout the year.
3. Project Specific Special Provisions include all supplemental specifications which are not GSP's nor BSP's. Project Specific Special Provisions, as the name implies, are intended for project specific use, whether one time or infrequent. The vast majority of Project Specific Special Provisions are formatted to supplement specific *Standard Specification* Sections. However, in rare cases, they can be formatted as "stand-alone" following the "**Description**/**Materials**/

Construction Requirements/**Measurement**/**Payment** format. Project Specific Special Provisions are identified by six asterisks in parenthesis immediately preceding the text or heading. A Project Specific Special Provision that sees frequent use can be standardized and elevated to BSP or GSP status.

B. Procedure

Based on review of the Bridge Plans and the PS&E Check List, the Bridge Specifications and Estimates Engineer determines the items of work which are not already covered by the *Standard Specifications* and for which supplemental specifications are needed. Based on this determination, and review of the current list of Amendments, GSP's, and BSP's, a Bridge Special Provision runlist is prepared, listing the code numbers of the applicable Amendment, GSP, and BSP documents needed for the project. Current Amendment, GSP, and BSP documents are listed in the WSDOT Design Office Project Development web site.

These documents are listed following the Section order of the *Standard Specifications*, Amendments first, followed by the Special Provisions. Fill-in blanks for BSP's and GSP's requiring project specific information can be completed at this time.

When the *Standard Specifications*, Amendments, GSP's and BSP's are insufficient to cover project specific requirements, Project Specific Special Provisions are developed, and added by name at the appropriate location in the runlist.

See Division 6 of the WSDOT *Plans Preparation Manual* for further discussion and example flow charts.

When the Bridge Special Provision file is complete with all Special Provisions needed to accompany the Bridge Plans, the Bridge Specifications and Estimates Engineer requests a single space document of the Bridge Special Provision file for use in the Bridge PS&E distribution.

12.4.7 Preparing the Bridge Working Day Schedule

A. General

The Bridge Specifications and Estimates Engineer calculates the number of the working days necessary to construct the bridge portion of the contract, based on the quantities shown in the Summary of Quantities form submitted with the Bridge Plans, and enters the time in the special provision "Time for Completion." The working days are defined in the Section 1-08.5 of the *Standard Specifications*.

B. Procedure

The first task of estimating the number of working days is to list all the construction activities involved in the project. These include all actual construction activities such as excavation, forming, concrete placement, and curing; and the nonconstruction activities such as mobilization, material and shop plan approval. Special conditions such as staging, limited access near wetlands, limited construction windows for work in rivers and streams, limited working hours due to traffic and noise restrictions, require additional time.

The second task is to assign the number of working days to each construction activity above (see Appendix 12.4-A2). The "Construction Time Rate" table can be used as a guide to estimate construction time required. This table shows the average rate of output for a single shift, work day only. Adjustment to the rates of this table should be made based on project size, type of work involved, location of the project, etc. In general, larger project will have higher production rates than smaller projects, new construction will have higher production rates than widening, and unstaged work will have higher production rates than stages work.

The last step is to arrange construction activities, with corresponding working days, into a construction schedule on a bar chart, either by hand on the Construction Working Day Schedule Form 230-041 (see Appendix 12.4-B1) or by computer using a scheduling program. List the activities in a logical construction sequence, starting from the substructure to the superstructure. Items shall overlap where practical and the critical path shall be identified.

12.4.8 Reviewing Projects Prepared by Consultants

A. General

Consultants preparing Bridge Plans are required to submit their Pre-Contract Review Bridge Plans review set to the Bridge and Structures Office on or before the scheduled Bridge Plan (Pre-Contract PS&E Review) turn-in date, and with all associated information (files, forms, lists, and reports), as specified in Sections 12.4.3 and 12.4.4.

The package shall be in the same format as those prepared by the Bridge and Structures Office.

B. Procedure

The Bridge Specifications and Estimates Engineer reviews the consultant's Bridge Plans following the process as specified in BDM Sections 12.4.3 and 12.4.4. The review comments of the Bridge Specifications and Estimates Engineer should be combined with review comments from the Bridge Design Unit assigned to review the project, and returned to the consultant in a timely manner through the Bridge Consultant Liaison Engineer, allowing the consultant to meet the scheduled turn-in date for the Bridge PS&E. After the consultant addresses all review comments and resubmits the package as 100 percent complete, the Bridge Specifications and Estimates Engineer compiles the Bridge PS&E package (See Section 12.4.9).

Except for hydraulic, mechanical, and electrical rehabilitation projects for movable bridges, and other unique bridge projects where specifically approved by the Bridge Projects Engineer, all Bridge Special Provisions shall be prepared by the Bridge Projects Unit. The Bridge Cost Estimate and working day schedule should be prepared by the Bridge Specifications and Estimates Engineer with assistance from the consultant as appropriate.

12.4.9 Submitting the PS&E Package

A. General

The PS&E package includes:

1. Cover transmittal memo to the Bridge Design Engineer (for new bridges and bridge widenings only)
2. Cover letter to the Region.
3. Bridge Construction Cost Estimate for each separate structure
4. Cost Estimate Summary for each separate structure (see Appendix 12.3-B1)
5. Not Included in Bridge Quantity List
6. Construction Working Day Schedule
7. Single space document of Bridge Special Provision file with runlist
8. Log of Test Borings
9. One Plan Set (11" by 17")

B. Procedure

The cover memorandum should be addressed to either the Region Plans Engineer (all Regions except for Olympic Region) or the Region Design Project Engineer (Olympic Region only). Others that should be included as cc's in the distribution are as follows:

1. FHWA Washington Division Bridge Engineer.
2. Region Design Project Engineer (except for Olympic Region – already addressed above).
3. Region Construction Project Engineer (if known and if different from the Region Design Project Engineer).
4. Northwest Region Area Engineering Manager (Northwest Region only).
5. Region Project Development Engineer (Eastern, North Central, South Central, and Southwest Regions only).
5. Bridge Construction Engineer.
6. Materials Laboratory.
7. Bridge Preservation Office.
8. Bridge Management Engineer (for all Bridge Replacement, Seismic Retrofit, and Bridge Repair projects).
9. All Bridge Design Unit Supervisors whose units contributed Bridge Plans to the project.
10. All bridge consultants who contributed Bridge Plans to the project.
11. Bridge Consultant Liaison Engineer (when bridge consultants contribute Bridge Plans to the project).

Modifications to the distribution list should be made by the Bridge Specifications and Estimates Engineer based on Region involved, and project specific requirements.

12.4.10 PS&E Review Period and Turn-in for AD Copy

A. Description

The PS&E Review Period between Bridge PS&E turn-in and Ad Date is used to allow the Region to compile PS&E from their Design PE Office and all support groups into a Review PS&E set that can be distributed to all interested parties for review and comment. The process ensures that all parts of the PS&E are compatible, complete, and constructable.

B. Procedure

Each Region has its own specific process, but the general procedure is similar. The Bridge and Structures Office review set is addressed to the Bridge Projects Engineer. This occurs shortly after the Bridge PS&E turn-in date. Upon receipt in the Bridge and Structures Office, the Review PS&E set is delivered to the Bridge Specifications and Estimates Engineer assigned to the project. The review is to be performed, and comments returned to the Region, by the due date specified in the distribution letter. Review comments should be returned to both the Region Plan Reviewer and the Region Design PE contact assigned to the project, as identified in the distribution letter.

Depending on the scope of the project, and the Region responsible for the project, there may be a meeting to discuss review comments. If such a meeting is held (generally about halfway through the PS&E review period), the Bridge Specifications and Estimates Engineer and others from the Bridge Design Unit responsible for the project, should consider attending if discussion of Bridge PS&E review comments is likely.

Shortly after the specified due date for review comments passes, Region comments on the Bridge PS&E should be received by the Bridge Specifications and Estimates Engineer and/or the bridge designer(s) in the Bridge Design Unit. These review comments on the Bridge PS&E should be addressed before the final Bridge PS&E is turned-in for AD Copy printing. The Bridge Specifications and Estimates Engineer makes all necessary revisions to the Bridge Cost Estimate and Bridge Special Provisions, and notifies the appropriate contacts in the Region Design PE Office and the Region Plans Office when these changes are complete. This should be completed at least two weeks prior to the scheduled Ad Date.

After the Bridge Design Unit has completed all necessary revisions to the Bridge Plans, the Bridge Plans are signed and dated in blue ink by the appropriate engineers, and the signed originals turned in to the Bridge Specifications Engineer. Copies of these signed plans are sent to the Region for use in the AD Copy PS&E. This should be completed one to two weeks prior to the scheduled Ad Date. The original signed plans are forwarded to the Bridge Plans Engineer in the Bridge Projects Unit.

Appendix 12.1-A1 Not Included In Bridge Quantities List

Washington State
Department of Transportation
Environmental And Engineering Service Center
Bridge and Structures Office

Not Included In Bridge Quantities List

SR	Job Number	Project Title		
Designed By	Checked By		Date	Supervisor
Type of Structure				

The following is a list of items for which the Bridge and Structures Office is relying on the Region to furnish plans, specifications and estimates.
1.
2.
3.
4.
5.
6.
7.
8.
9.
10.
11.
12.
13.
14.
15.
16.
17.

DOT Form 230-038 EF
Revised 2/97

Washington State Department of Transportation
Bridge and Structures

Bridge Quantities

Bridge No. _____	Date _____	✓ Indicate Unit of Measure: ☐ English ☐ Metric

St. Item No.	Item Use	Item Description	Quantity	Unit of Measure
0001(E) 0001(M)	Std. Item	Mobilization	_____	L.S.
0061 0061	GSP Item	Removing Portion of Existing Bridge Type _____ Area _____ SF/SM	_____	L.S.

Drilled Holes: *Less than 12"/305 mm long:* *Greater than 12"/305 mm long:*

Number	Diameter	Number	Diameter	Length
_____	_____ Inch/mm	_____	_____ Inch/mm	_____ LF/M
_____	_____ Inch/mm	_____	_____ Inch/mm	_____ LF/M
_____	_____ Inch/mm	_____	_____ Inch/mm	_____ LF/M

Core Drilled Holes: *Less than 12"/305 mm long:* *Greater than 12"/305 mm long:*

Number	Diameter	Number	Diameter	Length
_____	_____ Inch/mm	_____	_____ Inch/mm	_____ LF/M
_____	_____ Inch/mm	_____	_____ Inch/mm	_____ LF/M
_____	_____ Inch/mm	_____	_____ Inch/mm	_____ LF/M

0071 0071	GSP Item	Removing Existing Bridge Type _____ Area _____ SF/SM	_____	L.S.
	Sp. Prov.	Removing Temporary Structure Type _____ Area _____ SF/SM	_____	L.S.
4006/8331	Std. Item	Structure Excavation Class A Incl. Haul	_____	CY/M3

Unsuitable:

Pier	Soil
_____	_____ CY/M3
_____	_____ CY/M3
_____	_____ CY/M3
_____	_____ CY/M3

Cofferdam:

Pier	Soil	Rock
_____	_____ CY/M3	_____ CY/M3
_____	_____ CY/M3	_____ CY/M3
_____	_____ CY/M3	_____ CY/M3
_____	_____ CY/M3	_____ CY/M3

4010/8835	GSP Item	Special Excavation	_____	CY/M3

Pier	Soil
_____	_____ CY/M3
_____	_____ CY/M3
_____	_____ CY/M3
_____	_____ CY/M3

DOT Form 230-031 EF
Revised 03/2008

Page 1 of 6

St. Item No.	Item Use	Item Description	Quantity	Unit of Measure
4013/4013	Std. Item	Shoring or Extra Excavation Class A	_____	L.S.

Dry:

	Average Overall Height			
Pier	<6 ft./2 m	6 ft./2 m to 10 ft./3 m	10 ft./3 m to * 20 ft./6 m	>20 ft./6 m *
_____	_____ SF/SM	_____ SF/SM	_____ SF/SM	_____ SF/SM
_____	_____ SF/SM	_____ SF/SM	_____ SF/SM	_____ SF/SM
_____	_____ SF/SM	_____ SF/SM	_____ SF/SM	_____ SF/SM
_____	_____ SF/SM	_____ SF/SM	_____ SF/SM	_____ SF/SM

Cofferdam:

	Average Overall Height			
Pier	<6 ft./2 m	6 ft./2 m to 10 ft./3 m	10 ft./3 m to * 20 ft./6 m	>20 ft./6 m *
_____	_____ SF/SM	_____ SF/SM	_____ SF/SM	_____ SF/SM
_____	_____ SF/SM	_____ SF/SM	_____ SF/SM	_____ SF/SM
_____	_____ SF/SM	_____ SF/SM	_____ SF/SM	_____ SF/SM
_____	_____ SF/SM	_____ SF/SM	_____ SF/SM	_____ SF/SM

*Indicate average height

--	Sp. Prov.	Rock Bolt	_____	Each
4007/8332	Sp. Prov.	Soil Excavation For Shaft Including Haul	_____	CY/M3
4008/8333	Sp. Prov.	Rock Excavation For Shaft Including Haul	_____	CY/M3
Varies	Sp. Prov.	Furnishing and Placing Temp. Casing For _____ Diam. Shaft	_____	LF/M
Varies	Sp. Prov.	Furnishing Permanent Casing For _____ Diam. Shaft	_____	LF/M
Varies	Sp. Prov.	Placing Permanent Casing For _____ Diam. Shaft	_____	Each
4039/8344	Sp. Prov.	Casing Shoring	_____	LF/M
4164/8429	Sp. Prov.	CSL Access Tube	_____	LF/M
4152/8427	Sp. Prov.	St. Reinf. Bar For Shaft	_____	LB/KG
4168/8469	Sp. Prov.	Conc. Class 4000P For Shaft	_____	CY/M3
0256	Sp. Prov.	Removing Shaft Obstructions	_____	Est.
Varies	Std. Item	Preboring For _____ Pile	_____	LF/M
4060/4060	Std. Item	Furnishing and Driving Concrete Test Pile	_____	Each
4070/8363	Std. Item	Furnishing Concrete Piling - _____Diameter	_____	LF/M
4080/4080	Std. Item	Driving Concrete Pile - _____Diameter	_____	Each
4085/4085	Std. Item	Furnishing and Driving Steel Test Pile	_____	Each
4090/8373	Std. Item	Furnishing Steel Piling	_____	LF/M
4095/4095	Std. Item	Driving Steel Pile	_____	Each
4100/4100	Std. Item	Furnishing and Driving Timber Test Pile	_____	Each
4105/8381	Std. Item	Furnishing Timber Piling - Untreated	_____	LF/M
4107/8384	Std. Item	Furnishing Timber Piling _____	_____	LF/M
4108/4108	Std. Item	Driving Timber Pile - Untreated	_____	Each
4111/4111	Std. Item	Driving Timber Pile _____	_____	Each
4116/4116	Std. Item	Pile Splice - Timber	_____	Each
8376	Std Item	Furnishing Steel Pile Tip or Shoe	_____	Each
4130/4130	Std. Item	Placing Prestressed Hollow Concrete Pile _____	_____	Each
4140/4140	Std. Item	Driving Prestressed Hollow Concrete Pile _____	_____	Each

DOT Form 230-031 EF
Revised 03/2008

St. Item No.	Item Use	Item Description	Quantity	Unit of Measure
--	Sp. Prov.	Pile Loading Test No. of Tests _____ Each Pile Size _____ Ton/Tonne	_____	LF/M
4144/8418	Std. Item	Epoxy-Coated St. Reinf. Bar For _____	_____	LB/KG
4147/8410	Std. Item	Epoxy-Coated St. Reinf. Bar	_____	LB/KG
4148/8412	Std. Item	Epoxy-Coated St. Reinf. Bar For Bridge	_____	LB/KG
4149/8420	Std. Item	St. Reinf. Bar for Bridge	_____	LB/KG
4151/8426	Std. Item	St. Reinf. Bar for _____	_____	LB/KG
--	Sp. Prov.	Wire Mesh _____	_____	SY/SM
4166/8430	Std. Item	Lean Concrete _____	_____	CY/M3
--	Std. Item	Conc. Class _____	_____	CY/M3
4322/8452	Std. Item	Conc. Class 4000/28 for Bridge	_____	CY/M3
4155/8462	Std. Item	Conc. Class 4000/28 for Traffic Barrier	_____	CY/M3
4202/8442	Std. Item	Conc. Class 4000/28 for _____	_____	CY/M3
4200/8440	Std. Item	Conc. Class 3000/20 for _____	_____	CY/M3
4325/8477	Std. Item	Conc. Class 5000/35 for Bridge	_____	CY/M3
4205/8475	Std. Item	Conc. Class 5000/35 for _____	_____	CY/M3
4324/8468	Std. Item	Conc. Class 4000W/28W for Bridge	_____	CY/M3
4204/8466	Std. Item	Conc. Class 4000W/28W for _____	_____	CY/M3
--	GSP Item	Conc. Class EA	_____	CY/M3
--	Sp. Prov.	Conc. Class HE	_____	CY/M3
--	GSP Item	Fractured Fin Finish	_____	SY/SM
4230/4230	Std. Item	Structural Carbon Steel	_____	LB/KG
4235/4235	Std. Item	Structural Low Alloy Steel	_____	LB/KG
4240/4240	Std. Item	Structural High Strength Steel	_____	LB/KG
4246/4536	Std. Item	Cast Steel	_____	LB/KG
4251/8540	Std. Item	Forged Steel	_____	LB/KG
4256/8546	Std. Item	Cast Iron	_____	LB/KG
4261/8549	Std. Item	Malleable Iron	_____	LB/KG
4267/8552	Std. Item	Ductile Iron	_____	LB/KG
4271/8555	Std. Item	Cast Bronze	_____	LB/KG
4280/8560	Std. Item	Timber and Lumber - Untreated	_____	MBM/M3
4282/8582	Std. Item	Timber and Lumber - Creosote Treated	_____	MBM/M3
4284/8584	Std. Item	Timber and Lumber - Salts Treated	_____	MBM/M3
4300/4300	Std. Item	Superstructure Bridge Plan Area _____ SF/SM	_____	LS
4311/4311	Std. Item	Roadway Deck Bridge Plan Area _____ SF/SM	_____	LF/M

DOT Form 230-031 EF
Revised 03/2008

St. Item No.	Item Use	Item Description	Quantity	Unit of Measure
6945/9378	Std. Item	Conduit Pipe 2” Diam.	_____	LF/M
4400/8600	Sp. Prov.	Steel Handrail	_____	LF/M
4357/8609	Sp. Prov.	Bridge Rail - Low Fence Type - Superstr.	_____	LF/M
--	Sp. Prov.	Bridge Rail - High Fence Type	_____	LF/M
4410/8605	Std. Item	Bridge Railing Type _____	_____	LF/M
4420	GSP Item	Bridge Grate Inlet	_____	Each
4453/4453	GSP Item	Pigmented Sealer	_____	SY/SM
7169/9572	Std. Item	Structural Earth Wall	_____	SF/SM
--	Sp. Prov.	_____	_____	_____
--	Sp. Prov.	_____	_____	_____

DOT Form 230-031 EF
Revised 03/2008

Breakdown of Items for Superstructure or Roadway Deck

St. Item No.	Item Use	Item Description	Quantity	Unit of Measure
--	Std. Item	Epoxy-Coated Steel Reinforcing Bar	_____	LB/KG
--	Std. Item	Epoxy-Coated Steel Reinforcing Bar (Traffic Barrier)	_____	LB/KG
--	Std. Item	Steel Reinforcing Bar	_____	LB/KG
--	Std. Item	Steel Reinforcing Bar (Traffic Barrier)	_____	LB/KG
--	GSP Item	Conc. Class _____	_____	CY/M3
--	Std. Item	Conc. Class 4000D/28D	_____	CY/M3
--	Std. Item	Conc. Class 4000/28	_____	CY/M3
--	Std. Item	Conc. Class 4000/28 (Traffic Barrier)	_____	CY/M3
--	Std. Item	Conc. Class 5000/35	_____	CY/M3
--	Std. Item	Conc. Class _____ LS	_____	CY/M3
--	GSP Item	Fractured Fin Finish	_____	SY/SM
--	Std. Item	Structural Carbon Steel	_____	LB/KG
--	Std. Item	Structural Low Alloy Steel	_____	LB/KG
--	Std. Item	Structural High Strength Steel	_____	LB/KG
--	Std. Item	Cast Steel	_____	LB/KG
--	Std. Item	Forged Steel	_____	LB/KG
--	Std. Item	Cast Iron	_____	LB/KG
--	Std. Item	Malleable Iron	_____	LB/KG
--	Std. Item	Ductile Iron	_____	LB/KG
--	Std. Item	Cast Bronze	_____	LB/KG
--	Std. Item	Timber and Lumber - Untreated	_____	MBM/M3
--	Std. Item	Timber and Lumber - Creosote Treated	_____	MBM/M3
--	Std. Item	Timber and Lumber - Salts Treated	_____	MBM/M3
--	Sp. Prov.	Glulam Deck Panels	_____	MBM/M3
6945/9378	Std. Item	Conduit Pipe 2” Diameter	_____	LF/M
--	GSP Item	Steel Handrail	_____	LF/M
--	GSP Item	Bridge Rail - Low Fence Type - Superstr.	_____	LF/M
--	GSP Item	Bridge Rail - High Fence Type	_____	LF/M
--	Std. Item	Bridge Railing Type _____	_____	LF/M
--	GSP Item	Traffic Barrier	_____	LF/M
--	Sp. Prov.	Special Bridge Drain	_____	Each
4433/4433	Sp. Prov.	Modify Bridge Drain	_____	Each
4434/4434	GSP Item	Plugging Existing Bridge Drain	_____	Each
4420/4420	GSP Item	Bridge Grate Inlet	_____	Each

DOT Form 230-031 EF
Revised 03/2008

St. Item No.	Item Use	Item Description	Quantity	Unit of Measure
--	GSP Item	Expansion Joint System Type _____ Length _____ LF/M Type _____ Length _____ LF/M Type _____ Length _____ LF/M	_____	LF/M
4444/8634	BSP Item	Expansion Joint Modification Type _____ Length _____ LF/M	_____	LF/M
4232/8515	Std. Item	Modified Concrete Overlay	_____	CF/M3
4233/8516	Std. Item	Finishing and Curing Modified Concrete Overlay		SY/SM
4456/8644	Std. Item	Scarifying Concrete Surface	_____	SY/SM
	BSP Item	Polymer Concrete Overlay	_____	SY/SM
	Std. Item	Further Deck Preparation (for Modified Conc. overlay only) Volume _____ CF/CM Avg. Depth _____ Inch/mm	_____	L.S.
4445/4445	GSP Item	Bridge Deck Repair (for HMA overlays only) Volume _____ CF/CM Avg. Depth _____ Inch/mm	_____	L.S.
--	GSP Item	Pigment Sealer	_____	SY/SM
4455/8643	GSP Item	Membrane Waterproofing (Deck Seal)	_____	SY/SM
--	Sp. Prov.	Pot Bearing	_____	Each
--	BSP Item	Disc Bearing	_____	Each
--	BSP Item	Spherical Bearing	_____	Each
--	BSP Item	Cylindrical Bearing	_____	Each
--	SP. Prov.	Elastomeric Bearing Pad	_____	Each
--	GSP Item	Fabric Pad Bearing	_____	Each
4269/8500	BSP Item	Prestressed Conc. Girder W42G/W42MG	_____	LF/M
4269/8500	BSP Item	Prestressed Conc. Girder W50G/W50MG	_____	LF/M
4269/8500	BSP Item	Prestressed Conc. Girder W58G/W58MG	_____	LF/M
4269/8500	BSP Item	Prestressed Conc. Girder W74G/W74MG	_____	LF/M
4269/8500	BSP Item	Prestressed Conc. Girder WF83G/WF83MG	_____	LF/M
4269/8500	BSP Item	Prestressed Conc. Girder WF95G/WF95MG	_____	LF/M
--	Std. Item	Prestressing	_____	LB/KG
4269/8500	Sp. Prov.	Prestressed Conc. Girder _____In. PCPS Slab	_____	LF/M
4269/8500	Sp. Prov.	Prestressed Conc, Girder PCPS Ribbed Girder	_____	LF/M
4269/8500	Sp. Prov.	Prestressed Conc. Girder PCPS Double Tee	_____	LF/M
--	Sp. Prov.	Precast Segment Volume _____ CY/CM	_____	LF/M
--	Sp. Prov.	_____	_____	_____
--	Sp. Prov.	_____	_____	_____

Page 6 of 6

DOT Form 230-031 EF
Revised 03/2008

UNIT COSTS

	UNIT	LOW	AVERAGE	HIGH ΔΔ
Prestressed Concrete Girders				
— Span 50 - 175 FT.				
Water Crossing w/piling	SF	$150.00	$175.00	$200.00
Water Crossing w/spread footings	SF	$140.00	$165.00	$190.00
Dry Crossing w/piling	SF	$120.00	$155.00	$180.00
Dry Crossing w/spread footings	SF	$110.00	$145.00	$160.00
Reinforced Concrete And Post-Tensioned				
Concrete Box Girder — Span 50 - 200 FT.				
Water Crossing w/piling	SF	$200.00	$250.00	$300.00
Water Crossing w/spread footings	SF	$175.00	$225.00	$275.00
Dry Crossing w/piling	SF	$160.00	$200.00	$250.00
Dry Crossing w/spread footings	SF	$150.00	$190.00	$230.00
Reinforced Concrete Flat Slab	SF	$130.00	$155.00	$180.00
— Span 20 - 60 FT.				
Prestressed Concrete Slabs	SF	$110.00	$130.00	$150.00
— Span 13 - 69 FT.				
Prestressed Concrete Decked Bulb -Tee Girder	SF	$130.00	$155.00	$180.00
— Span 40 - 115 FT.				
Steel Girder — Span 60 - 400 FT.	SF	$150.00	$200.00	$250.00
Steel Box Girder — Span 300 - 700 FT.	SF		$250.00	
Steel Truss — Span 300 - 700 FT.	SF		$275.00	
Steel Arch — Span 30 - 400 FT.	SF		* $300.00	
Bridge Approach Slab	SY		$250.00	
Concrete Bridge Removal	SF	$20.00	$35.00	$50.00
Widening Existing Concrete Bridges (Including Removal)	SF	$175.00	$200.00	$300.00
Railroad Undercrossing — Single Track	LF	* $9,000.00 (Steel Underdeck Girder)		
		* $11,000.00 (Steel Thru-Girder)		
Railroad Undercrossing — Double Track	LF	* $14,000.00		
Pedestrian Bridge — Reinforced Concrete	SF	$200.00	$300.00	$600.00
Reinforced Concrete Rigid Frame (Tunnel)	SF		* $100.00	
Replace Existing Curbs & Barrier With	LF	$150.00	$200.00	$250.00
Safety Shape Traffic Barrier (Including Removal)				
Reinforced Concrete Retaining Wall (Exposed Area)	SF	$55.00	$75.00	$90.00
SE Wall — Welded Wire	SF	$20.00	$30.00	$40.00
SE Wall — Precast Conc. Panels or Conc. Block	SF	$30.00	$40.00	$50.00
SE Wall — CIP Conc. Fascia Panels (Special Design)	SF	$40.00	$50.00	$60.00
Permanent Geosynthic Wall w/ Shotcrete Facing	SF	$20.00	$35.00	$50.00
Permanent Geosynthic Wall w/ Concrete Fascia Panel	SF	$30.00	$45.00	$60.00

UNIT COSTS

	UNIT	LOW	AVERAGE	HIGH ΔΔ
Soldier Pile Wall (Exposed Area)	SF	$100.00	$120.00	$130.00
Soldier Pile Tieback Wall (Exposed Area)	SF	$140.00	$160.00	$200.00
Concrete Crib Wall Concrete Headers	SF	$40.00	$50.00	$60.00

*Based on limited cost data. Check with the Bridge PS&E Engineer.

Bridge areas are computed as follows:
Typical Bridges: Width x Length

Width: Total width of Deck, including portion under the barrier.
Length: Distance between back of pavement seats, or for a Bridge having Wingwalls, 3'-0" behind the top of the embankment slope; typically end of Wingwalls to end of Wingwalls, reference Standard Plans H9.

Special Cases:

Widenings - Actual area of new construction.

Tunnel - Outside dimension from top of footing to top of footing over the tunnel roof, i.e., including walls and top width.

ΔΔ For small jobs (less than $100,000), use the high end of the cost range as a starting point.

Before using these structure unit costs for any official WSDOT project cost estimate, contact the Bridge and Structures Office at (360) 705-7201 to discuss the specific project criteria and constructability related risks, so an appropriate structures construction cost can be provided.

(Note: Unit structure costs include mobilization but do not include **sales tax, engineering, or contingency)**

SUBSTRUCTURE

BID ITEMS	UNIT	UNIT COST LOW		UNIT COST HIGH ΔΔ
Structure Excavation Class A Incl. Haul				
Earth	CY	$12.00	—	$30.00
Rock	CY	$100.00	—	$220.00
Inside Cofferdam — Earth	CY	$22.00	—	$33.00
— Rock	CY	$110.00	—	$190.00
Shoring Extra Excavation Class A				
Dry — Depth under 6′	SF	$3.00	—	$8.00
Dry — 6′ - 10′	SF	$7.00	—	$11.00
Dry — 10′ - 20′	SF	$11.00	—	$22.00
Cofferdam	SF	$30.00	—	$40.00
Preboring For Standard Piles	LF	$35.00	—	$60.00
Furnishing & Driving Test Piles				
Concrete	EACH	$5,000.00	—	$10,000.00
Steel	EACH	$4,000.00	—	$8,000.00
Timber	EACH	$2,000.00	—	$3,000.00
Furnishing Piling				
Conc. _____ Dia.	LF	$35.00	—	$45.00
Steel — TYP HP 12x53	LF	$30.00	—	$35.00
Timber — Creosote Treated	LF	$10.00	—	$12.00
Timber — Untreated	LF	$8.00	—	$10.00
** Pile Tip				
CIP Concrete (Steel Casing — Short Tip)	EACH	$200.00	—	$250.00
CIP Concrete (Steel Casing — 10 Stinger)	EACH	$4,500.00	—	$5,500.00
Steel (H-Pile)	EACH	$120.00	—	$220.00
Timber (Arrow Tip)	EACH	$25.00	—	$45.00
Driving Piles (40′ - 70′ Lengths)				
Concrete _____ Dia.	EACH	$500.00	—	$1,000.00
Steel	EACH	$350.00	—	$800.00
Timber	EACH	$225.00	—	$450.00
Shafts				
Soil Excavation For Shaft Including Haul	CY	$300.00	—	$600.00
Rock Excavation For Shaft Including Haul	CY	$600.00	—	$800.00
Furnishing & Placing Temp. Casing For Shaft	LF	$125.00	—	$350.00
Furnishing Permanent Casing For Shaft	LF	$150.00	—	$600.00
Placing Permanent Casing For Shaft	EACH	$2,000.00	—	$3,000.00
Casing Shoring	LF	$150.00	—	$350.00
Shoring or Extra Excavation CL.A — Shaft	EST	$10,000.00	—	$25,000.00
Conc. Class 4000P For Shaft	CY	$250.00	—	$350.00
St. Reinf. Bar For Shaft	LBS	$1.00	—	$1.50
CSL Access Tubes	LF	$10.00	—	$15.00
Removing Shaft Obstructions	EST	10% of all of above shaft ____		

SUBSTRUCTURE

BID ITEMS	UNIT	UNIT COST LOW		HIGH ΔΔ
Conc. Class 4000W	CY	$250.00	—	$400.00
Conc. Class 4000P	CY	$250.00	—	$400.00
Conc. Class 4000 (Footings)	CY	$400.00	—	$600.00
Conc. Class 4000 (Abut. & Ret. Walls)	CY	$450.00	—	$650.00
Conc. Class 5000	CY	$550.00	—	$750.00
Lean Concrete	CY	$200.00	—	$250.00
Conc. Class 4000P (CIP Piling)	CY	$200.00	—	$250.00

ΔΔ For small jobs (less than $100,000), use the high end of the cost range as a starting point.
** Pile ultimate capacity will affect these prices. Check with Bridge PS&E Engineer if unsure.

SUPERSTRUCTURE

BID ITEMS	UNIT	UNIT COST LOW	UNIT COST HIGH ΔΔ
Elastomeric Bearing Pads			
Girder Seat	EACH	$150.00	$200.00
Girder Stop	EACH	$100.00	$150.00
Bearings - Spherical and Disc (In place with plates)	KIP	$15.00	$18.00
Fabric Pad Bearing (In place, including all plates, TFE, etc.)	EACH	$2,000.00	$3,000.00
Prestressed Concrete I Girder			
W42G (Series 6)	LF	$200.00	
W50G (Series 8)	LF	$225.00	
W58G (Series 10)	LF	$245.00	
W74G (Series 14)	LF	$265.00	
Wide Flange Prestressed Concrete Girder			
WF42G	LF	$250.00	
WF50G	LF	$275.00	
WF58G	LF	$300.00	
WF74G	LF	$325.00	
W83G	LF	$350.00	
W95G	LF	$400.00	
Spliced Prestressed Concrete I Girder			
WF74PTG	LF	$250.00	
W83PTG	LF	$275.00	
W95PTG	LF	$300.00	
Bulb Tee Girder			
WBT32G	LF	$250.00	
WBT38G	LF	$275.00	
WBT62G	LF	$300.00	
Trapezodial Tub Girder			
U54G4	LF	$500.00	
U54G5	LF	$510.00	
U54G6	LF	$520.00	
U66G4	LF	$530.00	
U66G5	LF	$540.00	
U66G6	LF	$560.00	
U78G4	LF	$570.00	
U78G5	LF	$580.00	
U78G6	LF	$600.00	
Wide Flange Trapezodial Tub Girder			
UF60G6	LF	$520.00	
UF60G5	LF	$530.00	
UF60G6	LF	$540.00	
UF72G4	LF	$550.00	
UF72G5	LF	$560.00	
UF72G6	LF	$570.00	
UF84G4	LF	$580.00	
UF84G5	LF	$590.00	
UF84G6	LF	$600.00	

SUPERSTRUCTURE

BID ITEMS	UNIT	UNIT COST LOW	UNIT COST HIGH ΔΔ
Structural Carbon Steel (Steel girder, when large amount of steel is involved)	LBS	$1.00	$1.50
Structural Low Alloy Steel (Steel girder, when large amount of steel is involved)	LBS	$1.25	$1.75
Structural Steel (Sign supports, when small amounts of steel is involved)	LBS	$4.00	$6.00
Timber & Lumber	MBM	$2,000.00	$2,800.00
Creosote Treated	MBM	$2,250.00	$3,000.00
Salts Treated	MBM	$1,500.00	$2,000.00
Untreated	MBM	$1,750.00	$2,250.00
Lagging (in place) Untreated	MBM	$2,550.00	$3,500.00
Expansion Joint Modification	LF	$400.00	$600.00
Expansion Joint System			
Compression Seal	LF	$80.00	$100.00
Modular (Approx. $100 per inch of movement)	LF	$1,500.00	$3,500.00
Strip Seal	LF	$250.00	$500.00
Rapid Cure Silicone	LF	$70.00	$100.00
Bridge Drains	EACH	$400.00	$600.00
Bridge Grate Inlets	EACH	$1,500.00	$2,000.00
Conc. Class 5000	CY	$700.00	$850.00
Conc. Class 5000 (Segmental Constr.)	CY	$850.00	$1,000.00
Conc. Class 4000D (Deck Only)	CY	$700.00	$800.00
Conc. Class 4000	CY	$650.00	$750.00
Conc. Class EA (Exposed Aggregate)	CY	$500.00	$600.00
Conc. Class 4000 LS (Low Shrinkage)	CY	$400.00	$550.00
Conc. Class 5000 LS	CY	$500.00	$600.00
St. Reinf. Bar	LBS	$1.00	$1.50
Epoxy-Coated St. Reinf. Bar	LBS	$1.25	$1.75
Post-tensioning Prestressing Steel (Includes Anchorages)	LBS	$6.00	$8.00
Traffic Barrier	LF	$90.00	$120.00
Bridge Railing Type BP & BP-S	LF	$60.00	$85.00
Bridge Railing Type Thrie Beam	LF	$60.00	$85.00
Modified Conc. Overlay	CF	$40.00	$80.00
Furnishing and Curing Modified Conc. Overlay	SY	$60.00	$100.00
Scarifying Conc. Overlay	SY	$15.00	$20.00
Polymer Concrete	SY	$90.00	$150.00
Polyester Concrete	CF	$140.00	$250.00

ΔΔ For small jobs (less than $100,000), use the high end of the cost range as a starting point.

MISCELLANEOUS

BID ITEMS	UNIT	UNIT COST LOW	UNIT COST HIGH ΔΔ
Conduit Pipe 2" Diameter	LF	$10.00	$15.00
Sign Support (Brackets, Mono, or Truss Sign Bridges)	LBS	$5.00	$7.00
Concrete Surface Finishes			
Fractured Fin Finish	SY	$20.00	$30.00
Exposed Aggregate Finish (Requires the use of concrete Class EA)	SY	$20.00	$25.00
Pigmented Sealer	SY	$7.00	$10.00
Painting Existing Steel Bridges (Lead Base)	TON (Steel)	$650.00	$900.00
Painting New Steel Bridges	LBS (Steel)	$0.12	$0.15
Mobilization	Sum of Items	10%	
Masonry Drilling Δ			
Holes up to 1'-0" in depth			
1" Diameter	EACH	$30.00	
1 ½" Diameter	EACH	$35.00	
2" Diameter	EACH	$40.00	
2 ½" Diameter	EACH	$42.00	
3" Diameter	EACH	$44.00	
3 ½" Diameter	EACH	$46.00	
4" Diameter	EACH	$52.00	
5" Diameter	EACH	$54.00	
6" Diameter	EACH	$70.00	
7" Diameter	EACH	$90.00	
Δ For holes greater than 1'-0" in depth and up to 20'-0" in depth, use 1.5 x above prices. If drilling through steel reinforcing, add $16.00 per lineal inch of steel drilled.			
Removal of Rails and Curbs	LF	$90.00	$140.00
Removal of Rails, Curbs, and Slab	SF	$30.00	$60.00
Further Deck Preparation	CF	$120.00	$175.00
Bridge Deck Repair	CF	$120.00	$180.00
Removing HMA from bridge deck	SY	$8.50	$13.50
Plugging Existing Bridge Drain	EACH	$350.00	

ΔΔ For small jobs (less than $100,000), use the high end of the cost range as a starting point.

Washington State Department of Transportation

Special Provisions Checklist

SR	Job No.	Project Title		
Design By		Check By	Date	Supervisor
Type of Structure				

Instructions:
- [X] Check items pertaining to this structure
- [X] _____ Note other items with "X" in box and fill in blank line
- [ ] Leave blank if it **DOES NOT** pertain to this structure

A. Permits and Regulations
- ☐ Coast Guard
- ☐ _____

B. Railroads
- ☐ Railroad Bridge
- ☐ Railroad in Vicinity
- ☐ _____

C. Order of Work
- ☐ Approach embankment settlement pe
- ☐ Stage construction sequence
- ☐ _____

D. Traffic Control
- ☐ Reduction in traffic lanes
- ☐ Traffic within _____ feet of new construction
- ☐ Traffic detoured, no traffic on bridge
- ☐ One way traffic on bridge
- ☐ _____

E. Utilities and Existing Pavement
- ☐ Utilities on Bridge, type _____
- ☐ Existing utilities in vicinity of construction
- ☐ Existing pavement in vicinity of construction
- ☐ _____

F. Falsework
- ☐ Falsework opening over existing roadway
- ☐ Falsework opening over railroad
- ☐ Falsework opening over water
- ☐ Protection of falsework
- ☐ Supported from existing structure
- ☐ Not supported from existing structure
- ☐ Special falsework release sequence required
- ☐ _____

DOT Form 230-037 EF
Revised 10/2006

G. Foundation

- ☐ Excavation near existing pavement
- ☐ Excavation near railroad track or facilities
- ☐ Concrete Seals
- ☐ Seal construction using a berm
- ☐ Cofferdams
- ☐ Pumping water from foundation excavation required
- ☐ Riprap at piers
- ☐ Removal of unsuitable material
- ☐ Rock excavation requiring threshold limit value
- ☐ Special Excavation
- ☐ _____

H. Forms

- ☐ Special forms for architectural treatment
- ☐ Fractured Fin Finish
- ☐ Variable depth random board finish
- ☐ 3/4 inch random board finish
- ☐ Remove forms from cells which have access (Box grider)
- ☐ _____

I. Piles

- ☐ Concrete test pile
- ☐ Concrete piling ____ inch diameter
- ☐ Steel test pile
- ☐ Steel piling _____
- ☐ Timber Test Pile
- ☐ Timber piling
- ☐ Pile loading test
- ☐ Pile minimum tip elevations
- ☐ Pile splice
- ☐ Pile tip
- ☐ Preboring for pile
- ☐ Driving piles in highly developed business or residential areas
- ☐ Excavation for pile
- ☐ Driving from existing structure
- ☐ No driving from existing structure
- ☐ _____

J. Shafts

- ☐ Required permanent casing
- ☐ Required temporary casing
- ☐ Casing shoring
- ☐ Shaft Seal
- ☐ CSL access tubes
- ☐ _____

DOT Form 230-037 EF
Revised 10/2006

K. Prestressed Concrete Griders

- ☐ Epoxy - coated prestressing steel
- ☐ Temporary strands
- ☐ f'c 28 days > 8,500 psi
- ☐ Precast prestressed member
- ☐ Spliced prestressed concrete girder
- ☐ Prestressed concrete tub girder
- ☐ _____

L. Superstructure

- ☐ Concrete class
- ☐ Post - tensioning tendons
- ☐ Elastomeric bearing pads
- ☐ Fabric pad bearing
- ☐ Disc bearing
- ☐ Spherical bearing
- ☐ Cylindrical bearing
- ☐ Electrical Conduit
- ☐ Expansion joint
- ☐ _____

M. Steel Structure

- ☐ Structural Carbon Steel
- ☐ Structural Low Alloy Steel
- ☐ Structural H.S. Steel
- ☐ Steel Casting
- ☐ A - 307 Fasteners
- ☐ M - 164 Fasteners
- ☐ A - 490 Fasteners
- ☐ Shop Assembling
- ☐ Notch Toughness Requirements
- ☐ Application of Paint - Color No. _____
- ☐ Steel Erection
- ☐ _____

N. Timber Structures

- ☐ Untreated
- ☐ Creosote treated
- ☐ Salt treated
- ☐ Glulam deck panels
- ☐ Type and grade of timber
- ☐ Fire prevention requirement needed
- ☐ _____

DOT Form 230-037 EF
Revised 10/2006

O. Signing and Lighting

- ☐ Navigation lighting system
- ☐ Temporary navigation light
- ☐ Sign bridge on structure
- ☐ Cantilever sign structure on bridge
- ☐ Bridge mounted sign brackets
- ☐ _____

P. Drainage System

- ☐ Special bridge drains
- ☐ Bridge grate inlets
- ☐ Downspout
- ☐ _____

Q. Surface Finish

- ☐ Fractured fin finish
- ☐ Sandblast finish
- ☐ Variable depth random board finish
- ☐ 3/4 inch random board finish
- ☐ Pigmented sealer
- ☐ _____

R. Special Classes of Concrete

- ☐ Concrete Class EA
- ☐ Concrete Class HE
- ☐ _____

S. Bridge Widening or Replacement

- ☐ Complete removal of existing structure
- ☐ Removing portions of existing structure
- ☐ Salvage Materials, storage site _____ , salvage item _____
- ☐ Coating contrete surface with epoxy resin
- ☐ Drilling holes
- ☐ Core drilled holes
- ☐ Set rebar with epoxy
- ☐ Use of rockbolts or rock anchors
- ☐ Grout, comp. strength _____ psi at ____ day, location _____
- ☐ As built Plans of existing structure available for bidder's inspection
- ☐ HMA overlay
- ☐ LMC overlay
- ☐ Polyester concrete overlay
- ☐ Bridge deck repair
- ☐ Further deck preparation
- ☐ Explosive prohibited
- ☐ Explosives allowed
- ☐ _____

DOT Form 230-037 EF
Revised 10/2006

T. Waterproofing

- ☐ Membrane waterproofing (Deck Seal)
- ☐ _____

U. Miscellaneous Items

- ☐ Temporary oak blocks
- ☐ Poured rubber
- ☐ Expaned polstyrene
- ☐ Plastic waterstops
- ☐ Expanded rubber
- ☐ Butyl rubber sheeting
- ☐ Grout, comp. strength ___ psi at _____ day, location _____
- ☐ Electrical conduit
- ☐ _____

V. Metal Bridge Railing

- ☐ Bridge Railing Type BP
- ☐ Bridge Railing Type _____
- ☐ _____

W. Repair Work

- ☐ Epoxy Crack Sealing
- ☐ Timber Redecking
- ☐ Concrete Deck Repair
- ☐ _____

X. Other Items

- ☐ Ceramic Tiles
- ☐ Sturctural Earth Wall
- ☐ Tieback Wall
- ☐ Noise Barrier Wall
- ☐ Winter Conditions
- ☐ Work Access
- ☐ Work hours or seasonal restrition
- ☐ Work Bridge
- ☐ Detour Bridge
- ☐ _____

DOT Form 230-037 EF
Revised 10/2006

Operation	Units**	Min. Output	Ave. Output	Max. Output
SUBSTRUCTURE				
Structure Exc. & Shoring	CY/DAY	20	80	150
*Seals	CY/DAY	10	15	20
*Footings	CY/DAY	6	10	14
*Abutment Walls	CY/DAY	4	7	19
*Wingwalls	CY/DAY	1	1.5	2
*Retaining Walls with Footings	CY/DAY	4	11	17
*Columns	CY/DAY	3	4	8
Falsework for X-beams	CY/DAY	4	10	13
*X-beams	CY/DAY	16	18	20
Furnishing Piles				
Precast Concrete	DAYS	40	30	20
Cast-in-Place Concrete	DAYS	15	5	2
Steel	DAYS	30	10	2
Timber	DAYS	20	5	2
Driving Piles				
Driving Test Piles	EACH/DAY	1	1	2
Concrete	LF/DAY	100	150	200
Steel	LF/DAY	100	150	200
Timber	LF/DAY	100	150	200
Shafts	DAYS	2	3	4
Soldier Pile Walls				
Driving Soldier Pile	DAYS	2	3	4
Permanent Ground Anchor	EACH	1	4	10
Timber Lagging	MBM/DAY	1	2	4
Concrete Fascia Panel	SF/DAY	100	800	1500
Soil Nail Walls				
Soil Nail	EACH	1	4	10
Shotcrete Facing	SF/DAY	1200	3000	6000
SUPERSTRUCTURE				
Prestressed Girders				
Girder Fabrication	DAYS	70	45	35
Set Girders	LF/DAY	200	550	1,450
*Slab & Diaphragms	CY/DAY	6	11	18

* Concrete
** All times are based on a single crew with 8-hour work DAYS

Operation	Units**	Min. Output	Ave. Output	Max. Output
Box Girders				
Span Falsework	SF/DAY	150	700	900
*Bottom Slab	CY/DAY	3	8	11
*Webs, Diaphragms, and X-beams	CY/DAY	5	18	25
*Top Slab	CY/DAY	7	9	12
Stress and Grout Strands	LBS/DAY	4,500	6,000	8,000
Strip Falsework	SF/DAY	1,500	2,200	3,000
T-Beam				
Span Falsework	SF/DAY	500	700	1,000
*Girders, Diaphragms, and Slab	CY/DAY	6	10	15
Strip Falsework	SF/DAY	1,000	1,500	2,000
Flat Slab				
Span Falsework	SF/DAY	100	250	600
*Slab and X-beams	CY/DAY	6	10	15
Strip Falsework	SF/DAY	300	500	1,000
Steel Girder				
Girder Fabrication	DAYS	200	150	110
Girder Erection	LF/DAY	50	100	200
*Slab	CY/DAY	6	10	15
Painting	SF/DAY	1,000	2,000	3,000
Miscellaneous				
*Traffic Barrier	LF/DAY	20	40	80
*Traffic Railing & Sidewalk	LF/DAY	15	35	60
*Concrete Deck Overlay	SY/DAY	200	250	300
Expansion Joint Replacement	DAYS/LANE CLOSURE	8	6	4
Bridge Rail Retrofit	LF/DAY	50	100	200

* Concrete

** All times are based on a single crew with 8-hour work DAYS

SR 162 7002 Carbon
River Bridge 162/14

Date of Transmittal	Estimate of Cost	Assume Accuracy %	Estimate Made By	Available Data								Copies Sent To			Remarks
				Field Data (Dated)	Date Layout Made	Foundation Date Rec.	Preliminary Quantities	Final Quantities	Estimate By Sq. Ft. Area	District	Design Branch	Program Development	
10-2-91	$517,000.00	±15%	DMJ	8-91			—		✓	3	✓	✓	Please See Cover Transmittal
1-9-92	$692,000.00	±10%	LHT					✓		✓	✓	✓	

Appendix 12.4-B1 Construction Working Day Schedule

HIGHWAY DIVISION
BRIDGE AND STRUCTURES BRANCH

CONSTRUCTION WORKING DAY SCHEDULE

SR	JOB NO	PROJECT TITLE
162	L0914	Carbon River Br. No. 162/14
DESIGN BY	CHECKED BY	DATE / SHEET
LHT		1/10/92 / KNK
TYPE OF STRUCTURE		
Prestressed Concrete		

DESCRIPTION OF WORK	WORKING DAYS 20 40 60 80 100 120 140 160 180 200 220
Mobilization	
Shop Plan Submittal	
Girder Fabrication	
Pier 1 and 4 Shoring	
Pier 1 and 4 Construction	
Pier 2 and 3 Shoring	
Pier 2 and 3 Construction	
X-Beam Construction	
Setting the Girders	
Slab Construction	
Traffic Barrier Construction	
Misc. and Demobilization	

Chapter 13 Bridge Load Rating Contents

13.1 General 13.1-1
13.1.1 WSDOT Rating (LRFR) 13.1-2
13.1.2 NBI Rating (LFR) 13.1-8

13.2 Special Rating Criteria 13.2-1
13.2.1 Dead Loads 13.2-1
13.2.2 Live Load Distribution Factors 13.2-1
13.2.3 Reinforced Concrete Structures 13.2-1
13.2.4 Concrete Decks 13.2-1
13.2.5 Concrete Crossbeams 13.2-1
13.2.6 In-Span Hinges 13.2-2
13.2.7 Concrete Box Girder Structures 13.2-2
13.2.8 Prestressed Concrete Girder Structures 13.2-2
13.2.9 Concrete Slab Structures 13.2-2
13.2.10 Steel Structures 13.2-2
13.2.11 Steel Floor Systems 13.2-2
13.2.12 Steel Truss Structures 13.2-2
13.2.13 Timber Structures 13.2-3
13.2.14 Widened or Rehabilitated Structures 13.2-3
13.2.15 13.2-3

13.3 Load Rating Software 13.3-1

13.4 Load Rating Reports 13.3-3

13.5 Bibliography 13.5-1

Appendix A
Appendix 13.4-A1 Bridge Rating Summary 13.4-A1-1

Chapter 13 Bridge Load Rating

13.1 General

Bridge Load Rating is a procedure to evaluate the adequacy of various structural components to carry predetermined live loads. The Bridge Load Rating Engineer in the WSDOT Bridge Preservation Office is responsible for the bridge inventory and load rating of existing and new bridges in accordance with the NBIS and the AASHTO Manual for Condition Evaluation of Bridges, latest edition. As presently required, only elements of the superstructure will be rated. Generally, the superstructure shall be defined as all structural elements above the column tops including drop crossbeams.

In order to provide a baseline rating for new bridges, load ratings are required for all new bridges, widened (one lane width or more throughout the length of the bridge), or rehabilitated bridges where the rehabilitation alters the load carrying capacity of the structure. The carrying capacity of a widened or rehabilitated structure shall equal or exceed the capacity of the existing structure.

The Bridge Design Section does not load rate new bridges during the design phase. However, copies of the computer models used in the design process shall be submitted to the Bridge Load Rating Engineer in the Bridge Preservation Section for the more complex structures where computer models were used in the design process.

The Bridge Preservation Office is responsible for maintaining an updated bridge load rating throughout the life of the bridge based on current bridge condition. Conditions of existing bridges change over time, resulting in the need for reevaluation of the load rating. Such changes may be caused by damage to structural elements, extensive maintenance or rehabilitative work, or any other deterioration identified by the Bridge Preservation Office through their regular inspection program.

This criteria applies only to concrete and steel bridges. For timber bridges, rating procedure shall be as per Chapters 6 and 7 of the 1994 AASHTO *Manual for Condition Evaluation of Bridges*.

Structural elements as defined above shall be evaluated for flexural, vertical shear, and torsional capacities based on Load Resistance Factor Design (LRFR) as outlined in the AASHTO 1989 *Guide Specifications for Strength Evaluation of Existing Steel and Concrete Bridges* and Load Factor Design (LFD) as outlined in the latest AASHTO *Manual for Condition Evaluation of Bridges*. Consider all reinforcing, including temperature/distribution reinforcement, in the rating analysis.

By definition, the adequacy or inadequacy of a structural element to carry a specified truck load will be indicated by the value of its rating factor (RF); that is, whether it is greater or smaller than 1.0. For a specific loading, the lowest RF value of the structural elements will be the overall rating of the bridge.

13.1.1 WSDOT Rating (LRFR)

Ratings shall be performed per the 1989 AASHTO *Guide Specifications for Strength Evaluation of Existing Steel and Concrete Bridges*. All bridges, except timber, shall be rated based on the Strength method.

A. Strength Method (LRFR)

The basic rating equations shall be:

$$RF = \frac{\Phi R_n - \gamma_{DL} D \pm S}{\gamma_L L(1 + I)}$$

When rating the full section of a bridge, like box girders, or crossbeams, which have two or more lanes, the following formulas apply for the overload trucks:

$$RF = \frac{\Phi R_n - \gamma_{DL} D \pm S - \gamma_L L_{Legal\ Load}(1 + I)}{\gamma_L L(1 + I)}$$

The formulas for the overloads assume that there is one overload truck in one lane, and legal trucks occupy the remaining lanes. Trucks shall be placed, in the lanes, in a manner that produces the maximum forces.

Where:

R.F. = Rating Factor (Ratio of Capacity to Demand)
R_n = Nominal Capacity of Section
D = Calculated Dead Load
S = Secondary Prestressing
L = Calculated Live Load
Φ = Resistance Factor (Capacity Reduction Factor)
γ_{DL} = Dead Load Factor.
γ_L = Live Load Factor
γ_P = Prestress Factor
I = Impact

*For continuous structures, a one-half support width moment increase is to be used.

B. Service Method (LRFR)

Prestressed and Post- tensioned Members

Prestressed and post-tensioned members in positive moment regions, and where post-tensioning is continuous over the supports, shall also be rated based on allowable stresses at service loads. The lowest rating factors between Service and Strength methods shall be the governing rating. The rating equations shall be:

Concrete Tension:

$$\text{R.F.} = \frac{F_A - (F_D + F_P + F_S)}{F_{L(1+I)}}$$

Concrete Compression:

$$\text{R.F.} = \frac{F_A - (F_D + F_P + F_S)}{F_{L(1+I)}}$$

$$\text{R.F.} = \frac{F_A - {}^1/_2 (F_D + F_P + F_S)}{F_{L(1+I)}}$$

Prestressing Steel:

$$\text{R.F.} = \frac{F_A - (F_D + F_P + F_S)}{F_{L(1+I)}}$$

R.F. = Rating Factor (Ratio of Capacity to Demand)

Allowable Concrete Tensile Stress:

$F_A = 6\sqrt{f'_c}$
$= 3\sqrt{f'_c}$ for severe corrosive exposure
$= 0$ for members without bonded reinforcement

Allowable Concrete compressive Stress:

$F_A = 6\sqrt{f'_c}$
$= 0.4\ f'_c$ when checking live load plus one half of the dead and prestress compressive stresses.

Allowable Prestressing Tensile Stress

F_A = $0.80f^*_y$ (Allowable Prestressing Tensile Stress) where f^*_y is the yield stress of the prestressing.
F_D = Dead Load Stress
F_p = Stress due to Prestress Force after all losses
F_S = Stress due to Secondary Prestress forces
$F_{L(1+I)}$ = Stress due to Live Load including Impact

For all loadings, prestress losses shall be per design or current Bridge Design Manual.

For the overload trucks, the allowable stresses shall be increased by 15 percent.

When the bending moment rating for the overload vehicles is less than 1.0 based on the Service Method, and greater than 1.0 based on the Strength Method, the moment rating shall be calculated by dividing the strength rating factor by 1.30, and the result cannot exceed 1.0.

Timber Members

$$R.F. = \frac{F_A - F_D}{F_L}$$

R.F. = Rating Factor (Ratio of Capacity to Demand)
F_A = Allowable bending stress
F_D = Dead Load Stress
F_L = Stress due to Live Load, does not include Impact

F_A is per AASHTO Standard Specs. with an increase of 33%.

C. Resistance Factors (LRFR)

The resistance factors shall be per Table 3b or Figure 4 of the 1989 AASHTO *Guide Specifications for Strength Evaluation of Existing Steel and Concrete Bridges*. The resistance factors can be increased up to a maximum of 0.95, or decreased, depending on the condition, redundancy, type of inspection, and type of maintenance. For state owned bridges, assume careful inspection and vigorous maintenance and for local agency bridges, consult with the agency's Bridge Engineer.

Following are the NBI and BMS condition codes and their interpretation:

For NBI Codes > or = 6 (BMS States 1 and 2) — no deterioration
For NBI Codes = 5 (BMS State 3) — some deterioration
For NBI Codes < 5 (BMS State 4) — heavy deterioration

The BMS coding shall be used to identify the conditions of the elements being rated, and the appropriate resistance factors shall be applied.

When rating members that have section loss identified in the inspection report, the members should be modeled using the reduced section. Then, use the resistance factors for members in satisfactory condition.

D. Load Factors (LRFR)

Dead Load $\gamma D = 1.20$

Prestress Load $\gamma P = 1.00$

Live Load

1. Low volume roadways (ADTT less than 1,000), significant sources of over weight trucks without effective enforcement. $\gamma L = 1.65$
2. Heavy volume roadways (ADTT equal to or greater than 1,000), significant sources of over weight trucks without effective enforcement. $\gamma L = 1.80$
3. OL-1 and OL-2 (or other permit vehicles). $\gamma L = 1.30$

If ADTT is unavailable from traffic data, it may be estimated as 20 percent of ADT. The listed factors are essentially the same as Table 2 of AASHTO *Guide Specifications* except that Live Load Category 1 and 2 have been eliminated based on the assumption that Washington State does not have effective enforcement or control of overloads.

E. Impact (LRFR)

For new bridge designs, impact shall be 10 percent (0.1).

For existing bridges, the impact factor shall be determined by the approach roadway and the deck condition. For approach roadway condition codes 6 or greater, assume 10 percent impact; for codes less than 6, assume 20 percent impact. If the bridge deck condition is 6 or greater or has 0 to 4 percent scaling, assume 10 percent impact; if the deck condition is 5 or has between 5 and 15 percent scaling, assume 20 percent impact; if the deck condition is 4 or less and has greater than 15 percent scaling, assumes 30 percent impact.

F. Live Load Reduction Factors (LRFR)

Number of Loaded Lanes	Reduction Factor
One or two lanes	1.0
Three lanes	0.8
Four lanes or more	0.7

G. Live Loads (LRFR)

The moving loads for the rating shall be the HS-20 truck/lane loading (Figure 13.1-1), three legal trucks/ lane load (Figure 13.1-2), and two overload trucks. (Figure 13.1-3). The legal lane load shall be used to rate structures with spans over 200 feet. For the two overload trucks (OL-1 and OL-2), use only one overload truck occupying one lane in combination with one of the AASHTO legal trucks in each of the remaining lanes, when modeling the full section of the bridge or cross-beams. The number of lanes used shall be the actual striped lanes at the time of rating.

The three legal trucks and legal lane load, Type 3, Type 3S2, and Type 3–3, are to be used to determine posting limits. The two overload vehicles represent extremes in the limits of permitted vehicles in Washington State.

H. Rating Trucks

Design Trucks

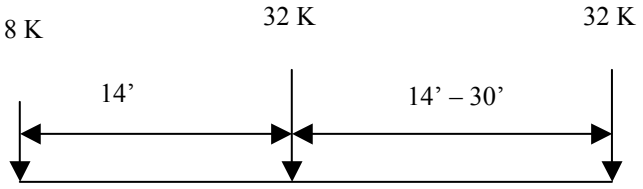

HS-20 Truck

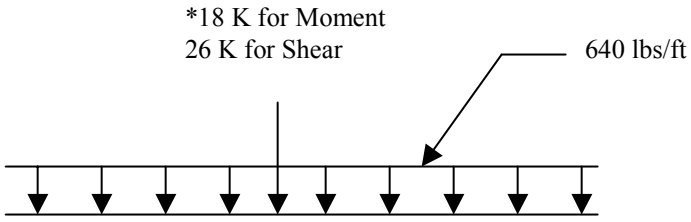

HS-20 Lane Load

* In negative moment regions of continuous spans, place an equivalent load in the other span to produce the maximum effect.

Figure 13.1-1

Legal Trucks

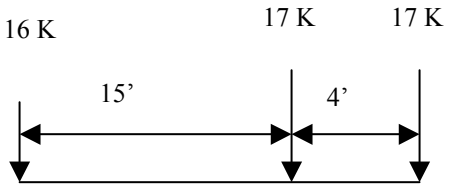

Type 3 Truck

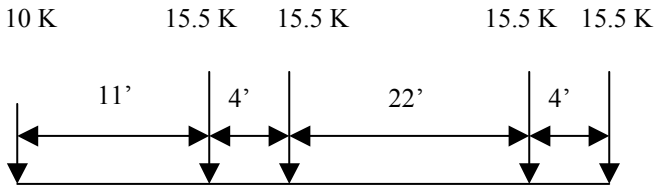

Type 3S2 Truck

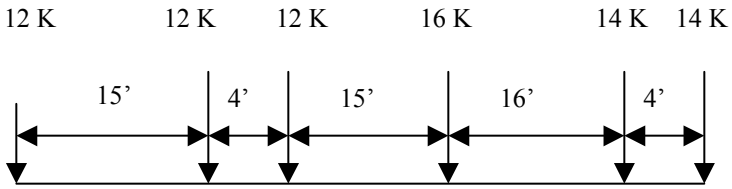

Type 3-3 Truck

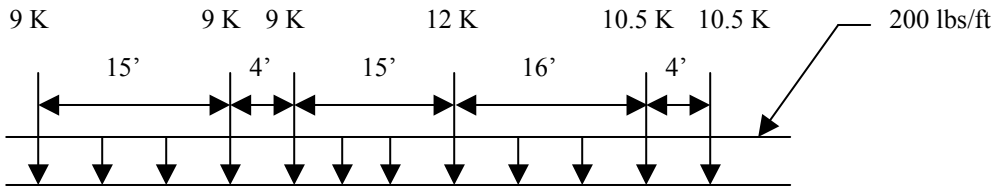

Legal Lane Load
Figure 13.1-2

Overload Trucks

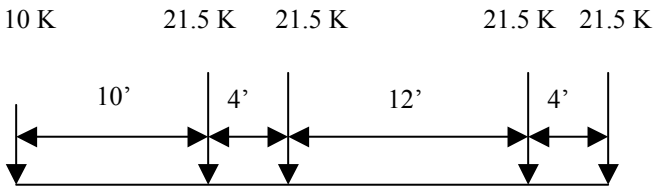

Overload 1

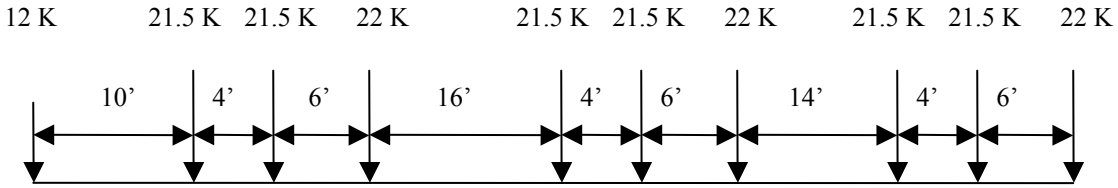

Overload 2
Figure 13.1-3

13.1.2 NBI Rating (LFR)

Ratings shall be performed per the latest AASHTO *Manual for Condition Evaluation of Bridges*. All bridges, except timber, shall be rated based on the Load Factor method. The HS20 Truck/Lane shall be used to calculate the Inventory and Operating Ratings.

A. Strength Method (LFR)

The basic equation shall be:

$$R.F. = \frac{\Phi R_n - \gamma_{DL} D \pm S}{\gamma_L L(1 + I)}$$

Where:

R.F. = Rating Factor (Ratio of Capacity to Demand)
R_n = Nominal Capacity of the Member
Φ = Resistance Factor (Per AASHTO Standard Specs.)
D = Unfactored Dead Load
L = Unfactored Live Load
S = Unfactored Prestress Secondary Moment or Shear
I = Impact Factor, Span dependant (Per AASHTO Standard Specs.)
γ_{DL} = 1.3 (Dead Load Factor)
γ_L = 2.17 for Inventory (Live Load Factor)
= 1.30 for Operating

Truck/Lane shall be used to calculate the Inventory and Operating Ratings.

B. Service Method (LFR)

1. Prestressed and Post-tensioned Members

Prestressed and post-tensioned members in positive moment regions, and where post-tensioning is continuous over the supports, shall also be rated based on allowable stresses at service loads. The lowest rating factor between Service and Load Factor methods shall be the governing Inventory rating. The Operating rating shall be based on the load factor method using a Live Load factor of 1.30. Service ratings for the HS20 shall be the same as stated in Section 13.1.1.B, except the impact factor shall be span dependant.

2. Timber Members

$$R.F. = \frac{F_A - F_D}{F_L}$$

R.F. = Rating Factor (Ratio of Capacity to Demand)
F_A = Allowable bending stress
F_D = Dead Load Stress
F_L = Stress due to Live Load, does not include Impact

* F_A, for Inventory rating, shall be per AASHTO Standard Specifications. For Operating Ratings, F_A shall be per AASHTO Standard Specifications with a 33% increase in the allowable stress.

C. Resistance Factors (LFR)

The resistance factors for NBI ratings shall be per the latest AASHTO Standard Specifications. Following are the NBI resistance factors:

Steel Members:	1.00 (Flexure) 1.00 (Shear)
Prestressed Concrete	1.00 (Flexure, Positive moment) 0.90 (Shear)
Post-tensioned, Cast in place:	0.95 (Flexure, Positive moment) 0.90 (Shear)
Reinforced Concrete:	0.90 (Flexure) 0.85 (Shear)

For prestressed and post-tensioned members, where reinforcing steel is used to resist negative moment, the resistance factors for reinforced concrete section shall be used in the ratings.

D. Live Loads

The HS-20 truck or lane shall be used to load rate bridge members. The number of lanes shall be per AASHTO Standard Specifications, Section 3.6. When multiple lanes are considered, apply the appropriate multilane reduction factor given in Section 13.1.2.F. Load distribution methods are discussed under specific bridge types. Do not consider sidewalk live loads in rating analysis.

E. Impact (LFR)

Impact is expressed as a fraction of the live load stress, and shall be determined by the following formula:

$$I = \frac{50}{125 + L}$$

I = Rating Factor (Ratio of Capacity to Demand)

L = Length in feet of the portion of the span that is loaded to produce the maximum stress in the member.

*AASHTO Standard Specifications for Highway Bridges 3.8.2.1.

F. Live Load Reduction Factors (LFR)

Number of Loaded Lanes	Reduction Factor
One or two lanes	1.0
Three lanes	0.9
Four lanes or more	0.75

13.2 Special Rating Criteria

13.2.1 Dead Loads

Dead Loads shall be as defined in the AASHTO *Standard Specifications for Highway Bridges*, except concrete weight shall be 155 pcf.

13.2.2 Live Load Distribution Factors

Live Load distribution factors shall be per Chapter 3 of the AASHTO *Standard Specifications for Highway Bridges.* Distribution factors are selected assuming one traffic lane where the roadway is less than 20 feet wide or two or more traffic lanes where the roadway is 20 feet or wider.

13.2.3 Reinforced Concrete Structures

For conventional reinforced concrete members of existing bridges, checking of serviceability shall not be part of the rating evaluation.

Rating for shear in the longitudinal direction shall begin at a distance $^{h}/2$ from the centerline of the bearing or face of integral cross beams (h= total depth).

13.2.4 Concrete Decks

For all concrete bridge decks, except flat slab bridges, that are designed per current AASHTO criteria for HS-20 loading or heavier, loading will be considered structurally sufficient and need not be rated. However, for existing bridge decks having any of the following conditions, rating of the deck is required:

1. Deck was designed for live loads lighter than HS-20.
2. Deck overhang is more than half the girder spacing.
3. Bridge Inspection Report Code is 4 or below.
4. When the original traffic barrier(s) or rail have been replaced by heavier barrier.

When rating of the deck is required, live load shall include all vehicular loads as specified in Section 13.1.1.H. Live load moments for the HS20 truck shall be per Section 3.24.3.1 of the AASHTO *Standard Specifications*. Live load moments for the legal and overload trucks shall be per the AASHTO *Manual for Maintenance Inspection of Bridges*.

13.2.5 Concrete Crossbeams

Live loads can be applied to the crossbeam as moving point loads at any location between curbs that produce the maximum effect.

When rating for shear in crossbeams, current AASHTO *Design Specifications* requires shear design to be at the face of support if there is a concentrated load within a distance “d” from the face of support. This requirement is new relative to earlier editions of AASHTO *Design Specifications* that allowed shear reinforcement design to be at a distance “d” from the face of support. When rating existing crossbeams that show no indication of distress on the latest inspection report, but have a rating factor of less than one (1.0), a more detailed/accurate shear analysis should be performed. One acceptable method is the “Strut and Tie” model analysis. For existing box girders and T-beams integral with the crossbeams, in lieu of this detailed analysis, dead and live loads can be assumed as uniformly distributed and the shear rating performed at a distance “d” from the face of support.

13.2.6 In-Span Hinges

For in-span hinges, rating for shear and bending moment should be performed based on the reduced cross-sections at the hinge seat. Diagonal hairpin bars are part of this rating as they provide primary reinforcement through the shear plane.

13.2.7 Concrete Box Girder Structures

Bridges with spread box girders shall be rated on a per box basis. Otherwise, the rating shall be on the per bridge basis for all applied loads.

13.2.8 Prestressed Concrete Girder Structures

Rate on a per member basis.

13.2.9 Concrete Slab Structures

Rate cast-in-place solid slabs on a per foot of width basis. Rate precast panels on a per panel basis. Rate cast-in-place voided slabs based on a width of slab equal to the predominant center-to-center spacing of voids.

When rating flat slabs on concrete piling, assume pin-supports at the slab/pile interface of interior piers and the slab continuous over the supports. If ratings using this assumption are less than 1.0, the piles should be modeled as columns with fixity assumed at 10 feet below the ground surface.

Pile caps are to be rated if deemed critical by the engineer.

13.2.10 Steel Structures

On existing bridges, checking of fatigue and serviceability shall not be part of the rating evaluation.

13.2.11 Steel Floor Systems

Floorbeams and stringers shall be rated as if they are simply supported. Assume the distance from outside face to outside face of end connections as the lengths for the analysis. Live loads can be applied to the floorbeam as moving point loads at any location between curbs, which produce the maximum effect.

Rating of connections is not required unless there is evidence of deterioration.

13.2.12 Steel Truss Structures

Rate on a per truss basis or perform a 3-D analysis or simplified distribution methods. Assume nonredundancy of truss members and pinned connections.

In general, rate chords, diagonals, verticals, end posts, stringers, and floorbeams. Gusset plates and structural pins shall be rated. For pin-connected trusses, analyze pins for shear, and the side plates for bearing capacity.

For truss members that have been heat-straightened three or more times, deduct 0.1 from ϕ(Phi).

13.2.13 Timber Structures

Unless the species and grade is known, assume Douglas fir, select structural for members installed prior to 1955 and Douglas fir, No. 1 after 1955. The allowable stresses for beams and stringers shall be as listed in the AASHTO *Standard Specifications.*

The nominal dimensions should be used to calculate dead load, and the net dimensions to calculate section modulus. If the member is charred, it may be assumed that ¼-inch of material is lost on all surfaces. Unless the member is notched or otherwise suspect, shear need not be calculated.

When calculating loads, no impact is assumed.

13.2.14 Widened or Rehabilitated Structures

For widened bridges, rate crossbeams in all cases.

For existing bridges, a load rating shall be performed if the load carrying capacity of the longitudinal members is altered, or the dead and live loads have increased due to the widening.

Longitudinal rating for the widened portion will be required only when the width of the widened portion on one side of the structure is greater than or equal to 10′-0" or more throughout the length of the structure.

For rehabilitated bridges, a load rating will be required if the load carrying capacity of the structure is altered by the rehabilitation.

13.2.15

A Live Load Factor of 1.45 for ADTT greater than 1000 and 1.30 for ADTT up to 1000 may be applied to bridges which are load rated by the 1989 LRFR method and have reasonable enforcement and apparent control of overloads. Also, the Load Factor method may be used to calculate the rating factors for the three legal loads for some structures. A statement under Note 11 of the Inspection Report shall be added identifying the controlling rating member for structures applying the statements stated above.

The use of the Live Load Factors and Load Factor Method as stated above shall be approved by the *Program Manager as defined by NBIS.

*The Program Manager is the individual in charge of the bridge program that has been assigned or delegated the responsibilities for bridge inspection, reporting, and inventory. The program manager provides overall leadership and is available to inspection team leaders to provide guidance. The State may delegate program manager status to qualified local agency bridge owners.

13.3 Load Rating Software

Rating of State bridges shall be performed using the BRIDG for Windows software, latest version.

For more complex structures such as Steel Curved girders and Arches, different software may be used to analyze the loads after obtaining approval from the Load Rating Engineer.

13.4 Load Rating Reports

Rating reports shall consist of:

1. A Bridge Rating summary sheet, as shown on Appendix 13.4-A1 reflecting the lowest rating factor, including superstructure components not analyzed by BRIDG, for each loading condition. The summary sheet shall be stamped and signed by a professional engineer licensed in the state of Washington.
2. A brief report of any anomalies in the ratings and an explanation of the cause of any rating factor below 1.0.
3. Hard copy of computer output files (RPT files) used for rating, and any other calculations or special analysis required.
4. A complete set of plans for the bridge.
5. One 3.5-inch data diskettes or compact disk which contains the final versions of all input and output files, and other calculations created in performing the load rating.

All reports shall be bound in Accopress-type binders.

When the load rating calculations are produced as part of a design project (new, widening, or rehabilitation,) the load rating report and design calculations shall be bound separately.

13.5 Bibliography

1. AASHTO Guide Specifications For Strength Evaluation of Existing Steel and Concrete Structures, 1989.
2. AASHTO Manual for Condition Evaluation of Bridges, Second Edition.
3. AASHTO Guide Specifications for Strength Design of Truss Bridges, Load Factor Design, 1985.
4. AASHTO Manual for Maintenance Inspection of Bridges.
5. AASHTO Standard Specifications for Highway Bridges, 17th edition.

PE Stamp Here

BRIDGE RATING SUMMARY

Bridge Name: _____
Bridge Number: _____
Span Types: _____
Bridge Length: _____
Design Load: _____
Rated By: _____
Checked By: _____
Date: _____

Truck	RF	γ	Controlling Point
HS-20			
AASHTO 1			
AASHTO 2			
3AASHTO 3			
OL-1			
OL-2			

NBI Rating	RF	Tons (US)	Controlling Point
Inventory			
Operating			

Remarks: