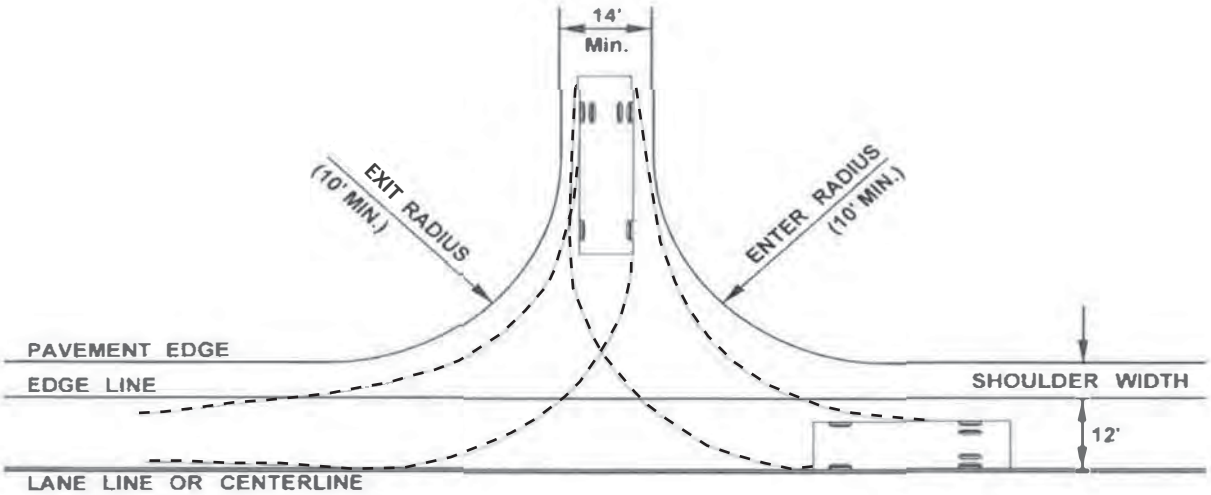

SINGLE LANE APPROACH - 14' WIDE (for P and SU-30 design vehicles)							
DESIGN VEHICLE	SHOULDER WIDTH	MINIMUM RADIUS		DESIGN VEHICLE	SHOULDER WIDTH	MINIMUM RADIUS	
		ENTER	EXIT			ENTER	EXIT
P	10'	10'	10'	SU-30	10'	21'	29'
	9'	10'	10'		9'	21'	29'
	8'	10'	10'		8'	21'	29'
	7'	10'	10'		7'	22'	30'
	6'	10'	10'		6'	24'	31'
	5'	10'	10'		5'	25'	32'
	4'	10'	10'		4'	27'	33'
	3'	10'	10'		3'	29'	35'
	2'	10'	10'		2'	32'	36'
	1'	10'	10'		1'	36'	37'
	0'	11'	10'		0'	42'	38'

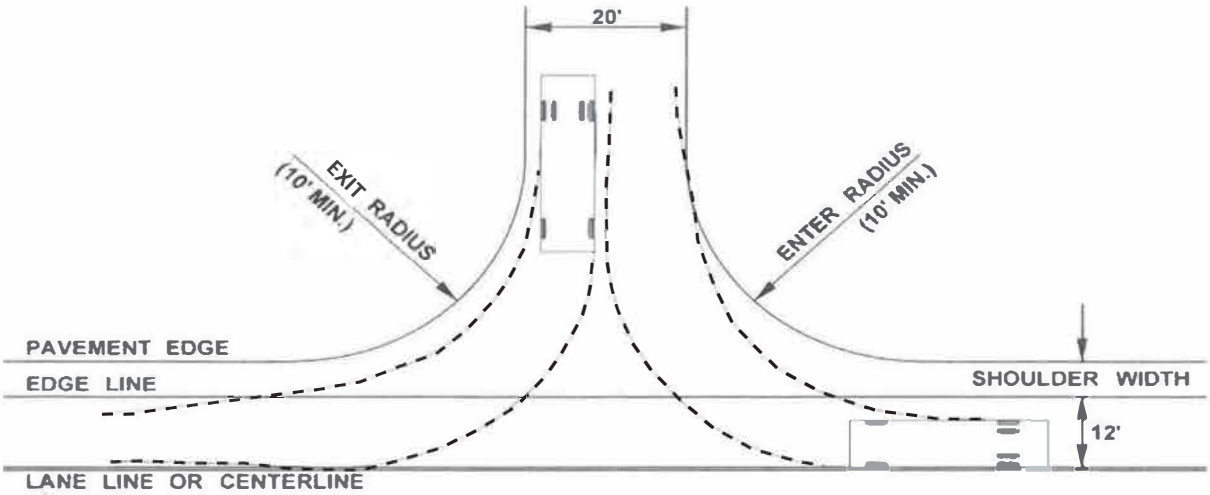

DOUBLE LANE APPROACH - 20' WIDE (for P and SU-30 design vehicles)							
DESIGN VEHICLE	SHOULDER WIDTH	MINIMUM RADIUS		DESIGN VEHICLE	SHOULDER WIDTH	MINIMUM RADIUS	
		ENTER	EXIT			ENTER	EXIT
P	10'	10'	10'	SU-30	10'	21'	46'
	9'	10'	10'		9'	23'	47'
	8'	10'	10'		8'	24'	48'
	7'	10'	10'		7'	25'	49'
	6'	10'	10'		6'	27'	50'
	5'	10'	10'		5'	28'	51'
	4'	10'	10'		4'	29'	52'
	3'	10'	10'		3'	30'	53'
	2'	10'	10'		2'	33'	54'
	1'	10'	14'		1'	37'	55'
	0'	12'	16'		0'	43'	56'

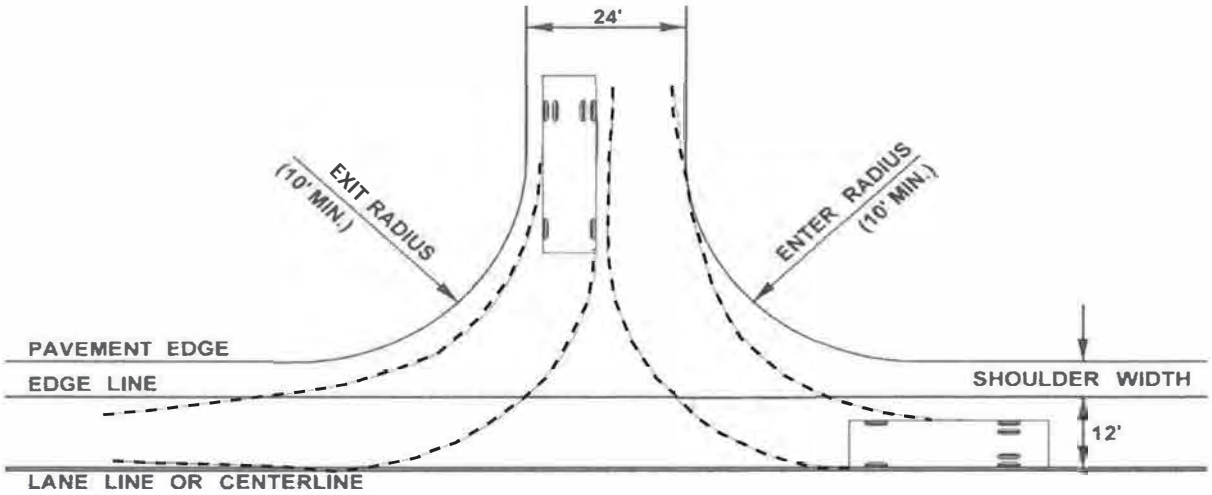

DOUBLE LANE APPROACH - 24' WIDE (for P, SU-30, and WB-40 design vehicles)							
DESIGN VEHICLE	SHOULDER WIDTH	MINIMUM RADIUS		DESIGN VEHICLE	SHOULDER WIDTH	MINIMUM RADIUS	
		ENTER	EXIT			ENTER	EXIT
P	10'	10'	10'	SU-30	10'	16'	31'
	9'	10'	10'		9'	18'	32'
	8'	10'	10'		8'	19'	33'
	7'	10'	10'		7'	21'	34'
	6'	10'	10'		6'	22'	35'
	5'	10'	10'		5'	24'	36'
	4'	10'	10'		4'	25'	37'
	3'	10'	10'		3'	28'	38'
	2'	10'	10'		2'	31'	39'
	1'	10'	10'		1'	35'	40'
	0'	10'	10'		0'	41'	41'
WB-40	10'	25'	44'				
	9'	26'	45'				
	8'	28'	46'				
	7'	30'	47'				
	6'	32'	49'				
	5'	34'	50'				
	4'	37'	51'				
	3'	40'	52'				
	2'	44'	53'				
	1'	49'	54'				
	0'	55'	55'				

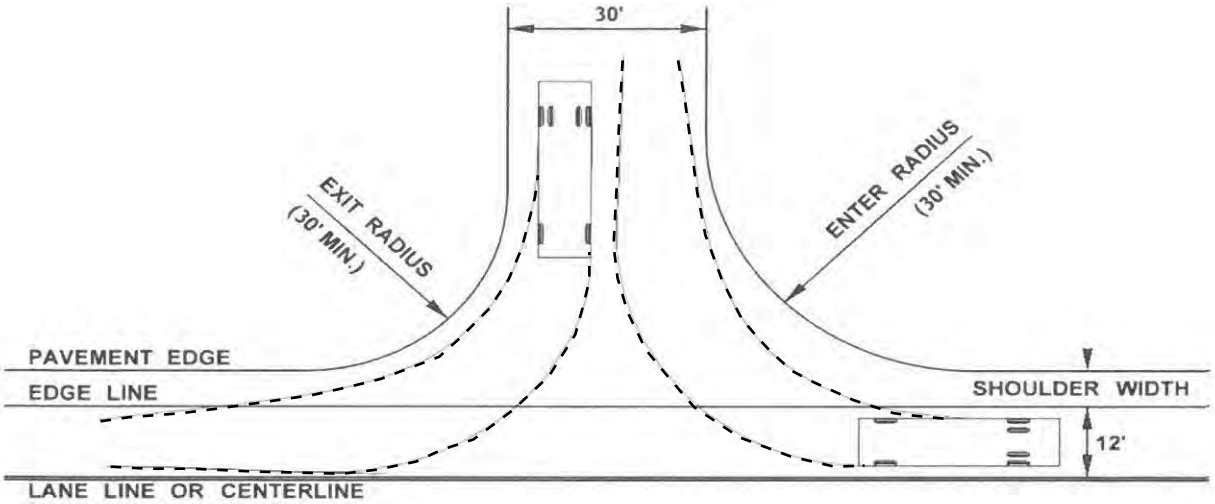

DOUBLE LANE APPROACH - 30' WIDE
(for SU-30, WB-40, and WB-50 design vehicles)

DESIGN VEHICLE	SHOULDER WIDTH	MINIMUM RADIUS		DESIGN VEHICLE	SHOULDER WIDTH	MINIMUM RADIUS	
		ENTER	EXIT			ENTER	EXIT
SU-30	10'	30'	30'	WB-50	10'	37'	52'
	9'	30'	30'		9'	40'	53'
	8'	30'	30'		8'	42'	54'
	7'	30'	30'		7'	45'	56'
	6'	30'	30'		6'	48'	57'
	5'	30'	30'		5'	52'	58'
	4'	30'	30'		4'	56'	59'
	3'	30'	30'		3'	61'	60'
	2'	30'	30'		2'	66'	61'
	1'	32'	30'		1'	73'	62'
	0'	38'	30'		0'	83'	63'
WB-40	10'	30'	30'				
	9'	30'	30'				
	8'	30'	31'				
	7'	30'	32'				
	6'	30'	33'				
	5'	31'	34'				
	4'	34'	36'				
	3'	37'	37'				
	2'	41'	38'				
	1'	46'	39'				
	0'	52'	40'				

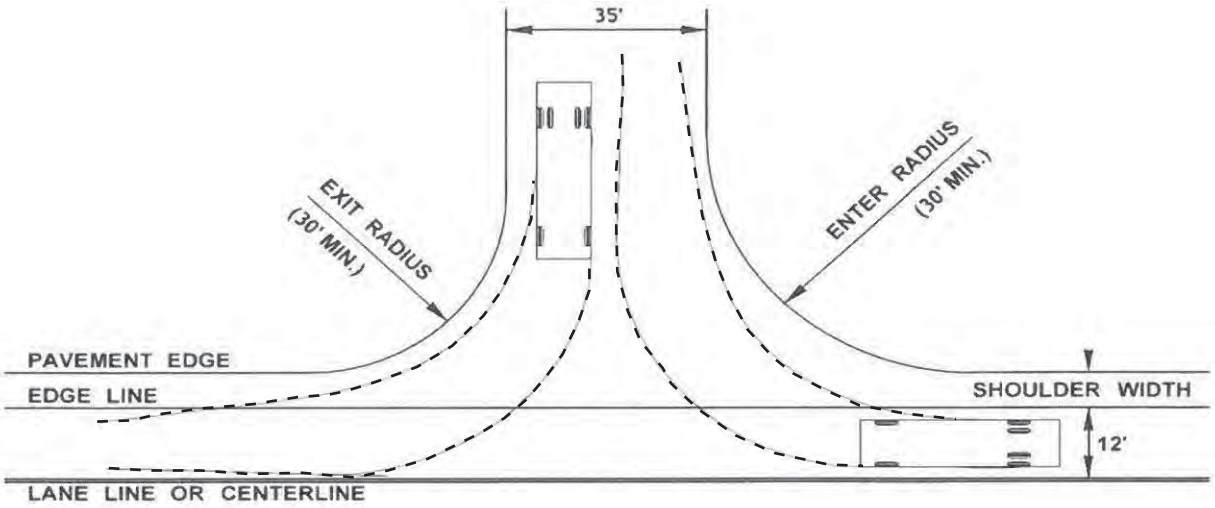

DOUBLE LANE APPROACH - 35' WIDE
(for WB-40, WB-50 and WB-67 design vehicles)

DESIGN VEHICLE	SHOULDER WIDTH	MINIMUM RADIUS		DESIGN VEHICLE	SHOULDER WIDTH	MINIMUM RADIUS	
		ENTER	EXIT			ENTER	EXIT
WB-40	10'	30'	30'	WB-67	10'	55'	69'
	9'	30'	30'		9'	59'	70'
	8'	30'	30'		8'	63'	71'
	7'	30'	30'		7'	67'	73'
	6'	30'	30'		6'	72'	74'
	5'	30'	30'		5'	77'	75'
	4'	30'	30'		4'	82'	76'
	3'	34'	30'		3'	90'	77'
	2'	38'	30'		2'	99'	78'
	1'	43'	32'		1'	110'	79'
	0'	49'	33'		0'	126'	80'
WB-50	10'	34'	41'				
	9'	36'	42'				
	8'	39'	43'				
	7'	42'	44'				
	6'	45'	45'				
	5'	49'	47'				
	4'	53'	48'				
	3'	58'	49'				
	2'	63'	50'				
	1'	70'	51'				
	0'	80'	52'				

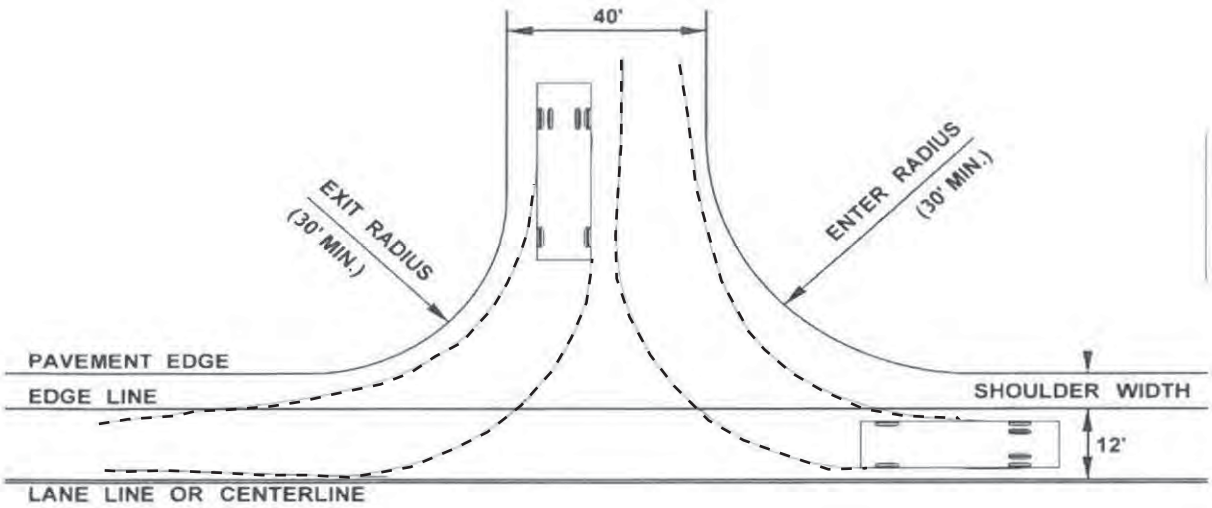

DOUBLE LANE APPROACH - 40' WIDE (for WB-50 and WB-67 design vehicles)							
DESIGN VEHICLE	SHOULDER WIDTH	MINIMUM RADIUS		DESIGN VEHICLE	SHOULDER WIDTH	MINIMUM RADIUS	
		ENTER	EXIT			ENTER	EXIT
WB-50	10'	30'	32'	WB-67	10'	52'	57'
	9'	33'	33'		9'	56'	59'
	8'	36'	35'		8'	60'	60'
	7'	39'	36'		7'	64'	61'
	6'	42'	37'		6'	69'	62'
	5'	46'	38'		5'	74'	63'
	4'	51'	40'		4'	80'	65'
	3'	56'	41'		3'	87'	66'
	2'	60'	42'		2'	96'	67'
	1'	68'	43'		1'	107'	68'
	0'	77'	45'		0'	123'	69'

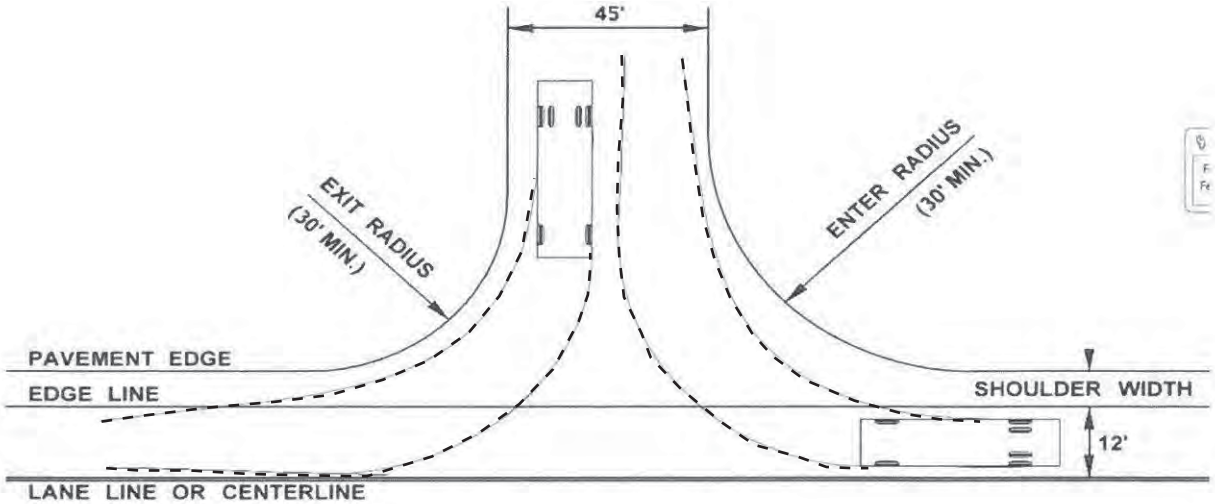

DOUBLE LANE APPROACH - 45' WIDE (for WB-50 and WB-67 design vehicles)							
DESIGN VEHICLE	SHOULDER WIDTH	MINIMUM RADIUS		DESIGN VEHICLE	SHOULDER WIDTH	MINIMUM RADIUS	
		ENTER	EXIT			ENTER	EXIT
WB-50	10'	30'	30'	WB-67	10'	49'	48'
	9'	30'	30'		9'	53'	49'
	8'	33'	30'		8'	57'	51'
	7'	36'	30'		7'	61'	52'
	6'	39'	30'		6'	66'	53'
	5'	43'	32'		5'	71'	54'
	4'	48'	33'		4'	78'	56'
	3'	53'	35'		3'	85'	57'
	2'	58'	36'		2'	94'	58'
	1'	65'	37'		1'	105'	59'
	0'	74'	39'		0'	120'	60'

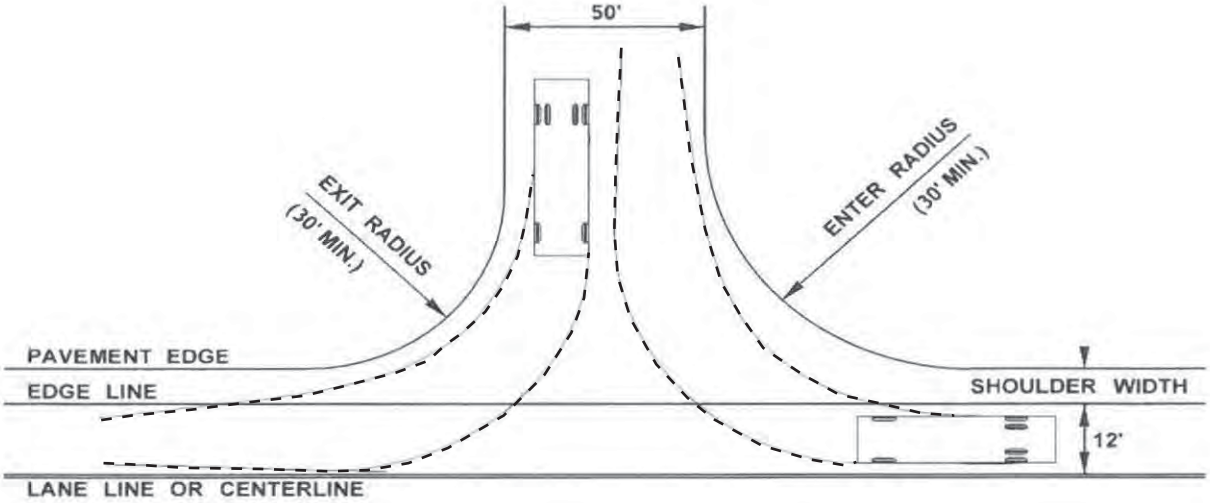

DOUBLE LANE APPROACH - 50' WIDE (for WB-50 and WB-67 design vehicles)							
DESIGN VEHICLE	SHOULDER WIDTH	MINIMUM RADIUS		DESIGN VEHICLE	SHOULDER WIDTH	MINIMUM RADIUS	
		ENTER	EXIT			ENTER	EXIT
WB-50	10'	30'	30'	WB-67	10'	46'	41'
	9'	30'	30'		9'	50'	42'
	8'	30'	30'		8'	54'	43'
	7'	33'	30'		7'	58'	44'
	6'	36'	30'		6'	63'	46'
	5'	40'	30'		5'	68'	47'
	4'	45'	30'		4'	75'	48'
	3'	50'	30'		3'	82'	49'
	2'	55'	31'		2'	91'	51'
	1'	62'	33'		1'	102'	52'
	0'	72'	35'		0'	118'	53'

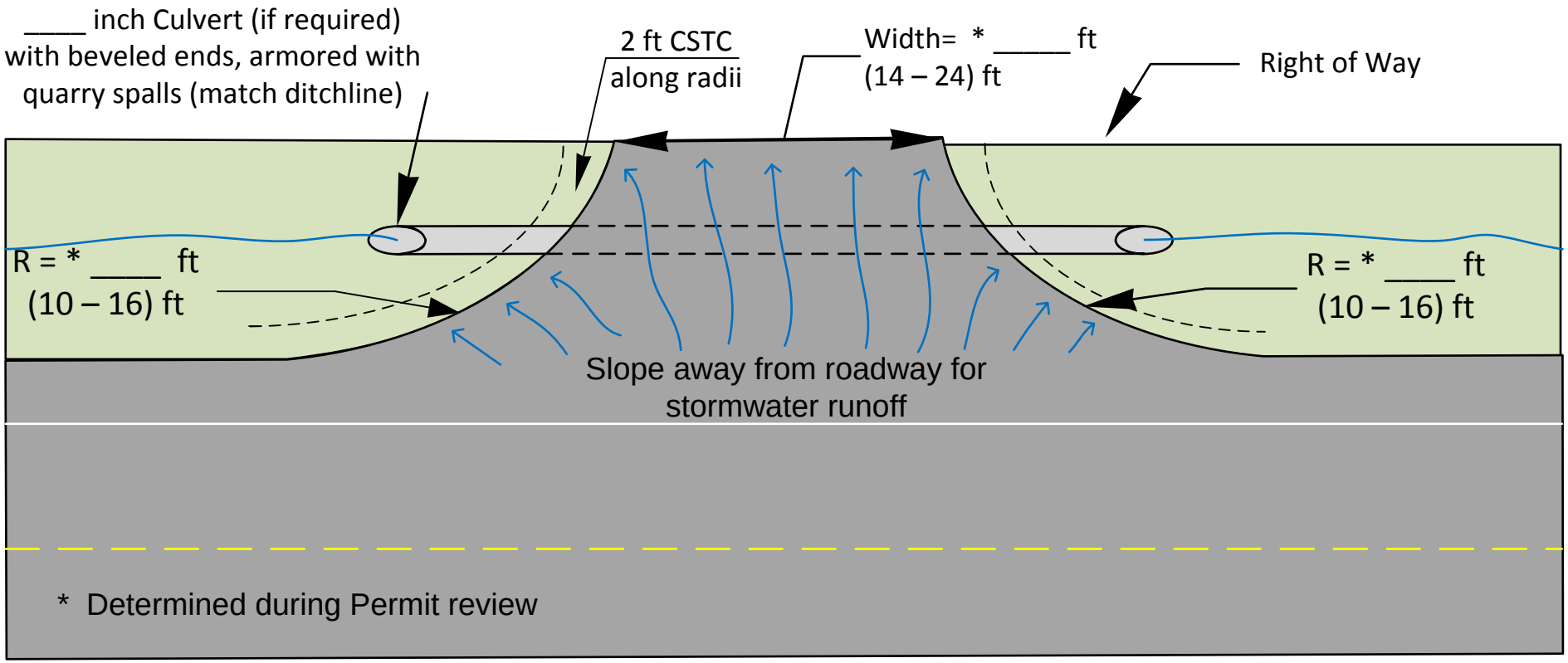

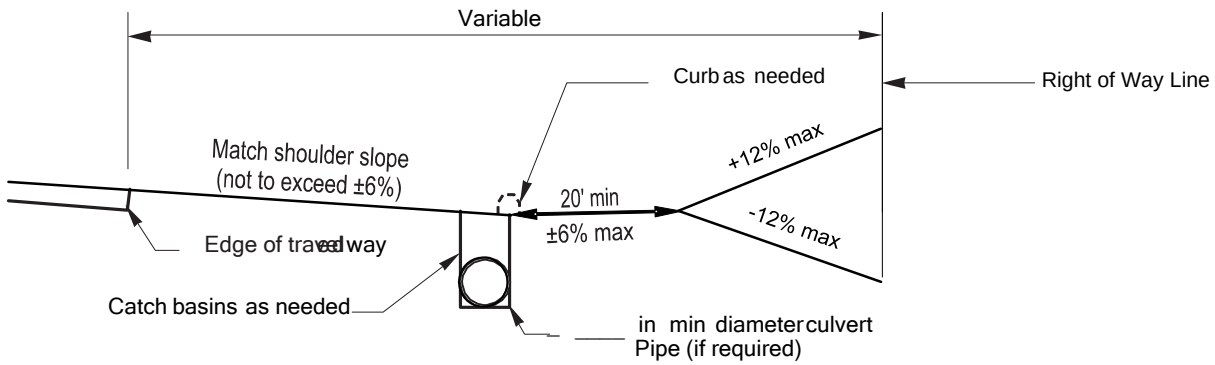

P(Passenger) Vehicles Only

Exhibit ____

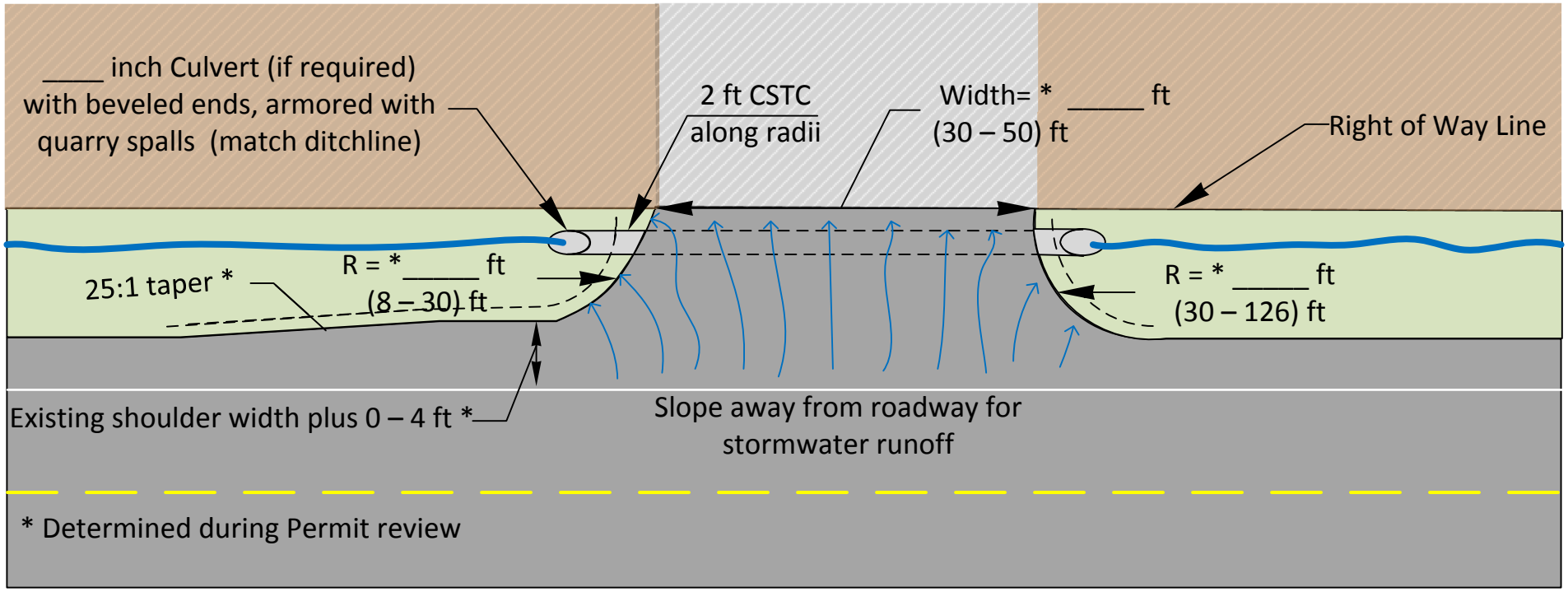

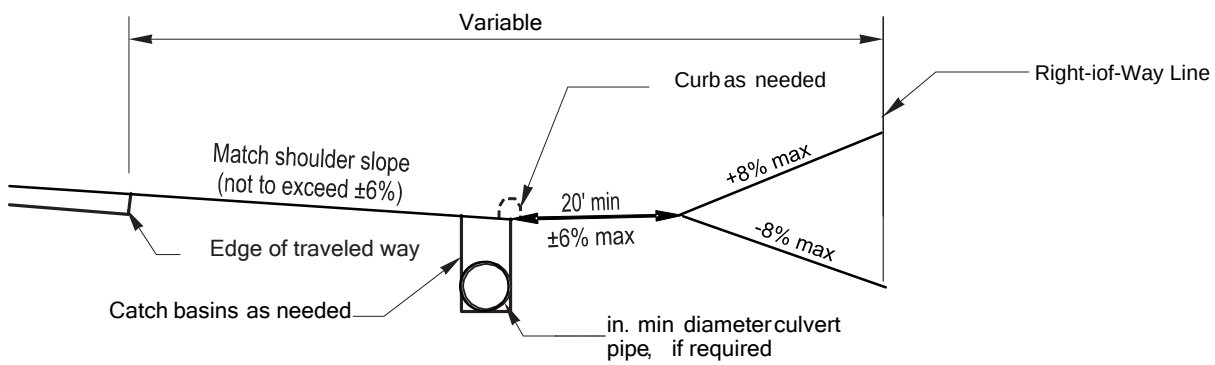

SU - 30 and Larger

Exhibit _____