EFFECTIVE: APRIL 2, 2007 TO JANUARY 6, 2008
EFFECTIVE: APRIL 2, 2007 TO JANUARY 6, 2008

JUMP TO A SECTION IN THE TABLE OF CONTENTS:

A B C D E F G H I J K L M

Standard Plans

For Road, Bridge, and Municipal Construction

M 21-01



Washington State Department of Transportation



EFFECTIVE: APRIL 2, 2007 TO JANUARY 6, 2008
EFFECTIVE: APRIL 2, 2007 TO JANUARY 6, 2008

EFFECTIVE: APRIL 2, 2007 TO JANUARY 6, 2008
EFFECTIVE: APRIL 2, 2007 TO JANUARY 6, 2008



Americans with Disabilities Act (ADA) Information

Materials can be provided in alternative formats for people with disabilities by calling:

- **Office of Equal Opportunity (OEO) at (360) 705-7097.**
- **Persons who are deaf, hard of hearing, or speech disabled may contact OEO through the Washington Relay Service at 7-1-1.**

Washington State Department of Transportation
Engineering Publications
Transportation Building
P.O. Box 47408
Olympia, WA 98504-7408
(360) 705-7430 (voice)
(360) 705-6861 (fax)
engrpubs@wsdot.wa.gov (E-mail)

EFFECTIVE: APRIL 2, 2007 TO JANUARY 6, 2008
EFFECTIVE: APRIL 2, 2007 TO JANUARY 6, 2008
EFFECTIVE: APRIL 2, 2007 TO JANUARY 6, 2008
EFFECTIVE: APRIL 2, 2007 TO JANUARY 6, 2008

EFFECTIVE: APRIL 2, 2007 TO JANUARY 6, 2008
EFFECTIVE: APRIL 2, 2007 TO JANUARY 6, 2008

Foreword

This manual contains standard engineering drawings used for road, bridge, and municipal construction. These drawings have been prepared under the direct supervision of a Washington State licensed professional engineer, who is knowledgeable in the specialized field of civil engineering depicted in each drawing. This manual standardizes fabrication, installation, and construction methods for specific items of work, and complements the contract documents and the *Standard Specifications for Road, Bridge, and Municipal Construction.*

Updating the manual is a continual process and revisions are issued periodically. Questions, comments, and recommendations for changes are welcome.

Contact the **Design Standards Team** at:

(360) 705-7540 (phone)

designstandards@wsdot.wa.gov (e-mail)

For contact via conventional mail, the *Comment Request Form* on the reverse side of this page is provided to facilitate routing and prompt delivery. Making a copy will preserve the original form for future use. Attach a copy of the form as a cover sheet when sending comments or sketches made on other documents, such as marked copies of specific Standard Plans. Your questions, comments, and/or recommendations should be sent to:

Design Standards
Transportation Building
Olympia, WA 98504-7329.

Further information, as well as Bentley MicroStation (.dgn) CAD files, Adobe Acrobat (.pdf) files, and some AutoCAD (.dwg) CAD files, can be found on the Design Standards website at:

http://www.wsdot.wa.gov/eesc/design/designstandards

Contact the **Engineering Publications Office** at **(360) 705-7430** if you require additional copies of this manual.



Pasco Bakotich III
State Design Engineer

EFFECTIVE: APRIL 2, 2007 TO JANUARY 6, 2008
EFFECTIVE: APRIL 2, 2007 TO JANUARY 6, 2008

EFFECTIVE: APRIL 2, 2007 TO JANUARY 6, 2008
EFFECTIVE: APRIL 2, 2007 TO JANUARY 6, 2008

Comments

From: _____ Date: _____
_____ Phone: _____
_____
_____

To: Design Standards
Washington State Department of Transportation
Transportation Building
PO Box 47329
Olympia, WA 98504-7329

Subject: Standard Plans Manual Comment

Comment: ☐ See attached

Preserve this original for future use • Submit copies only

EFFECTIVE: APRIL 2, 2007 TO JANUARY 6, 2008
EFFECTIVE: APRIL 2, 2007 TO JANUARY 6, 2008

EFFECTIVE: APRIL 2, 2007 TO JANUARY 6, 2008
EFFECTIVE: APRIL 2, 2007 TO JANUARY 6, 2008

Contents

Plan No.	Plan Title	Publication Approval Date	
Section A	**Concrete Pavement**		
A-1	Cement Concrete Pavement Joints	10/24/06	
A-2	Bridge Approach Slab	12/20/06	*2 Sheets*
A-3	Transition from Concrete Overlay	5/30/02	*2 Sheets*
A-5	Dowel Bar Retrofit for Cement Concrete Pavement	2/24/03	*3 Sheets*
A-6	Cement Concrete Pavement Repair	2/24/03	*2 Sheets*
A-7	Bridge Transverse Joint Seal	10/4/05	
Section B	**Drainage Structures and Hydraulics**		
B-5.20-00	Catch Basin Type 1	6/1/06	
B-5.40-00	Catch Basin Type 1L	6/1/06	
B-5.60-00	Catch Basin Type 1P (for Parking Lot)	6/1/06	
B-10.20-00	Catch Basin Type 2	6/1/06	
B-10.40-00	Catch Basin Type 2 with Flow Restrictor	6/1/06	
B-10.60-00	Catch Basin Type 2 with Baffle Type Flow Restrictor	6/8/06	
B-15.20-00	Manhole Type 1	6/1/06	
B-15.40-00	Manhole Type 2	6/1/06	
B-15.60-00	Manhole Type 3	6/1/06	
B-20.20-01	Drywell Type 1 (for Swale)	11/21/06	
B-20.40-01	Drywell Type 2 (with Pipe Inlet)	11/21/06	
B-20.60-01	Drywell Type 3 (with At-Grade Inlet)	11/21/06	
B-25.20-00	Combination Inlet	6/8/06	
B-25.60-00	Concrete Inlet	6/1/06	
B-30.10-00	Rectangular Frame (Reversible)	6/8/06	
B-30.20-01	Rectangular Solid Metal Cover	11/21/06	
B-30.30-00	Rectangular Vaned Grate	6/1/06	
B-30.40-00	Rectangular Bi-Directional Vaned Grate	6/1/06	
B-30.50-00	Rectangular Herringbone Grate	6/1/06	
B-30.70-00	Circular Frame (Ring) and Cover	6/1/06	
B-30.80-00	Circular Grate	6/8/06	
B-30.90-00	Miscellaneous Details for Drainage Structures	6/8/06	
B-35.20-00	Grate Inlet Type 1 (Cast-In-Place)	6/8/06	
B-35.40-00	Grate Inlet Type 2	6/8/06	*2 Sheets*
B-40.20-00	Welded Grates for Grate Inlet	6/1/06	
B-40.40-00	Frame and Dual Vaned Grates for Grate Inlet	6/1/06	
B-45.20-00	Drop Inlet Type 1	6/1/06	
B-45.40-00	Drop Inlet Type 2	6/1/06	
B-50.20-00	Grates for Drop Inlet	6/1/06	
B-55.20-00	Pipe Zone Bedding and Backfill	6/1/06	
B-60.20-00	Connection Details for Dissimilar Culvert Pipe	6/8/06	
B-60.40-00	Coupling Bands for Corrugated Metal Pipe	6/1/06	
B-65.20-00	Animal/Pedestrian Underpass	6/1/06	
B-65.40-00	Equipment Underpass	6/1/06	
B-70.20-00	Beveled End Sections (for Culverts 30” Diameter or Less)	6/1/06	
B-70.60-00	Flared End Sections	6/1/06	
B-75.20-00	Headwalls for Culvert Pipe and Underpass	6/1/06	
B-75.50-00	Type 1 Safety Bars for Stepped Culvert Pipe or Pipe Arch	6/8/06	
B-75.60-00	Type 2 Safety Bars for Culvert Pipe or Pipe Arch (On Cross Road)	6/8/06	
B-80.20-00	Tapered End Section with Type 3 Safety Bars	6/8/06	
B-80.40-00	Tapered End Section with Type 4 Safety Bars (On Cross Road)	6/1/06	

EFFECTIVE: APRIL 2, 2007 TO JANUARY 6, 2008
EFFECTIVE: APRIL 2, 2007 TO JANUARY 6, 2008

EFFECTIVE: APRIL 2, 2007 TO JANUARY 6, 2008
EFFECTIVE: APRIL 2, 2007 TO JANUARY 6, 2008

Contents

Plan No.	Plan Title	Publication Approval Date	
B-82.20-00	Residential Storm Drain, Under Sidewalk	6/1/06	
B-85.10-00	Vertical Connection (for Sanitary Sewer Use)	6/1/06	
B-85.20-00	Side Sewer Connection (for Sanitary Sewer Use)	6/1/06	
B-85.30-00	Standing Side Sewer Connection (for Sanitary Sewer Use)	6/1/06	
B-85.40-00	8 Inch Sewer Clean-Out (for Sanitary Sewer Use)	6/8/06	
B-85.50-00	Drop Connections (for Sanitary Sewer Use)	6/8/06	
B-90.10-00	Hydrant Setting Types A and B	6/8/06	
B-90.20-00	2 Inch Blowoff Assembly	6/8/06	
B-90.30-00	Combination Air Release / Air Vacuum Valve Assembly	6/8/06	
B-90.40-00	Concrete Thrust Block	6/8/06	
B-90.50-00	Concrete Thrust Block for Convex Vertical Bends	6/8/06	
B-95.20-00	Median Barrier Drainage Installation	6/8/06	
B-95.40-00	Inlet Placement at Bridge End	6/8/06	

Section C Traffic Barrier

C-1	Beam Guardrail: Types 1 ~ 4 (W-Beam)	2/6/07	*2 Sheets*
C-1a	Beam Guardrail (Thrie Beam)	7/31/98	
C-1b	Beam Guardrail Posts and Blocks	10/31/03	*2 Sheets*
C-1c	Beam Guardrail	5/30/97	
C-1d	Thrie Beam Guardrail Reducer Section	10/31/03	
C-2	Guardrail Placement (Cases 1, 2 & 3)	1/6/00	
C-2a	Guardrail Placement (Cases 4, 5 & 6)	6/21/06	
C-2b	Guardrail Placement (Cases 7 & 8)	6/21/06	
C-2c	Guardrail Placement, Median Bull Nose (Cases 9A, 9B & 9C)	6/21/06	
C-2d	Guardrail Placement (Cases 10A, 10B & 10C)	6/21/06	
C-2e	Guardrail Placement (Cases 11A, 11B & 11C)	6/21/06	
C-2f	Guardrail Placement, Weak Post Intersection Design (8' - 6" Max. Radius) (Cases 12AC, 12AD, 12BC & 12BD)	3/14/97	
C-2g	Guardrail Placement, Weak Post Intersection Design (35' Max. Radius) (Cases 13AC, 13AD, 13BC & 13BD)	7/27/01	
C-2h	Guardrail Placement (Case 14)	3/28/97	
C-2i	Guardrail Placement (Case 15)	3/28/97	
C-2j	Guardrail Placement (Cases 16, 17 & 18)	6/12/98	
C-2k	Guardrail Placement 12' - 6" Span (Cases 19A & 19B)	7/27/01	
C-2n	Guardrail Placement 18' - 9" Span (Case 20)	7/27/01	
C-2o	Guardrail Placement 25' Span (Case 21)	7/13/01	
C-2p	Guardrail Placement, Strong Post Intersection Design (Cases 22AC, 22AD, 22BC & 22BD)	10/31/03	
C-2q	Barrier Placement, Cable Barrier to W-Beam Connections (Cases 23 & 24)	3/3/05	
C-2r	Barrier Placement, Cable to Thrie Beam Bull Nose Connection (Case 25)	3/3/05	
C-2s	Barrier Placement, Cable to W-Beam Shielding for Redirectional Landform (Case 26)	3/3/05	
C-2t	Barrier Placement, Cable Barrier Shielding for Redirectional Landform (Case 27)	3/3/05	
C-3	Beam Guardrail Transition Sections (Types 1, 1A, & 1B)	10/4/05	
C-3a	Beam Guardrail Transition Sections (Types 2, 4, 5, & 6)	10/4/05	
C-3b	Beam Guardrail Transition Sections (Types 10 ~ 15)	10/4/05	*2 Sheets*
C-3c	Beam Guardrail Transition Sections (Types 16, 17, & 18)	6/21/06	
C-3d	Cable Barrier Type 3 Transition to W-Beam Guardrail	3/3/05	*2 Sheets*

EFFECTIVE: APRIL 2, 2007 TO JANUARY 6, 2008
EFFECTIVE: APRIL 2, 2007 TO JANUARY 6, 2008

EFFECTIVE: APRIL 2, 2007 TO JANUARY 6, 2008
EFFECTIVE: APRIL 2, 2007 TO JANUARY 6, 2008

Contents

Plan No.	Plan Title	Publication Approval Date	
C-4	Beam Guardrail Buried Terminal Type 1	2/21/07	
C-4a	Beam Guardrail Buried Terminal Type 2	2/21/07	
C-4b	Beam Guardrail Flared Terminal	6/8/06	
C-4e	Beam Guardrail Non-Flared Terminal	2/20/03	
C-4f	Beam Guardrail Bull Nose Terminal	6/30/04	*4 Sheets*
C-5	Guardrail Connection to Bridge Rail or Concrete Barrier	10/31/03	
C-6	Beam Guardrail Anchor Type 1	5/30/97	*2 Sheets*
C-6a	Beam Guardrail Anchor Type 2	3/14/97	
C-6c	Beam Guardrail Anchor Type 4	1/6/00	
C-6d	Beam Guardrail Anchor Type 5	5/30/97	
C-6f	Beam Guardrail Anchor Type 7	7/25/97	
C-7	Beam Guardrail End Sections	10/31/03	
C-7a	Thrie Beam End Sections	10/31/03	
C-8	Concrete Barrier Type 2	4/27/04	*2 Sheets*
C-8a	Concrete Barrier Type 4 and Transition Section	7/25/97	
C-8b	Concrete Barrier Light Standard Section	1/11/06	2 Sheets
C-8e	Precast Concrete Barrier Anchor ~ Type 3 (Permanent)	2/21/07	
C-8f	Concrete Barrier Transition, Type 2 to Bridge F-Shape	6/30/04	
C-10	Box Culvert Guardrail Steel Post	7/31/98	*2 Sheets*
C-11	Cable Barrier	5/20/04	
C-11a	Cable Barrier Placement	5/20/04	
C-11b	Cable Barrier Terminal	5/20/04	*2 Sheets*
C-12	Impact Attenuator Inertial Barrier Configurations	7/27/01	
C-13	Single Slope Barrier Pre-Cast Type	4/16/99	*2 Sheets*
C-13a	Single Slope Barrier Pre-Cast Type, Transition Section	4/16/99	
C-13b	Single Slope Barrier Pre-Cast Type, Single Sided Section	4/16/99	
C-14a	Single Slope Concrete Barrier (Dual Face)	7/26/02	
C-14b	Concrete Barrier Transition, Type 2 to Single Slope	7/26/02	
C-14c	Single Slope Concrete Barrier Terminal	7/26/02	
C-14d	Single Slope Concrete Barrier Transition Section	7/26/02	
C-14e	Single Slope Concrete Barrier (Vertical Back)	7/26/02	
C-14f	Single Slope Concrete Barrier Placement (Split)	9/2/05	
C-14g	Single Slope Concrete Barrier Placement (Wrap)	11/21/06	
C-14h	Single Slope Concrete Barrier Light Standard Foundation	1/11/06	
C-14i	Single Slope Concrete Barrier Sign Bridge Foundation	12/2/03	*2 Sheets*
C-14j	Single Slope Concrete Barrier Transition for Monotube Sign Support	12/2/03	
C-14k	Single Slope Concrete Barrier Cantilever Sign Structure Fdn.	1/11/06	*2 Sheets*
C-16a	Traffic Barrier Shoulder Widening ~ for Shoulders 8.0' and Wider	11/8/05	
C-16b	Traffic Barrier Shoulder Widening ~ for Shoulders Less Than 8.0' Wide	11/8/05	
C-20.14-00	Beam Guardrail Type 31: Placement (Cases 1A, 2A, & 5A)	2/6/07	
C-20.40-00	Beam Guardrail Type 31: Placement ~ 12'-6", 18'-9", or 25'-0" Span	2/6/07	
C-22.40-00	Beam Guardrail Type 31: Non-Flared Terminal	2/6/07	
C-23.60-00	Beam Guardrail (Type 31): Anchor Type 10	2/6/07	
C-25.18-00	Beam Guardrail (Type 31): Transition Section Type 20	2/6/07	
C-25.20-00	Beam Guardrail (Type 31): Transition Section Type 21	2/6/07	
C-25.22-00	Beam Guardrail Type 31: Transition to Beam Guardrail Type 1	2/21/07	
C-28.40-00	Beam Guardrail Type 31	2/6/07	

EFFECTIVE: APRIL 2, 2007 TO JANUARY 6, 2008
EFFECTIVE: APRIL 2, 2007 TO JANUARY 6, 2008

EFFECTIVE: APRIL 2, 2007 TO JANUARY 6, 2008
EFFECTIVE: APRIL 2, 2007 TO JANUARY 6, 2008

Contents

Plan No.	Plan Title	Publication Approval Date	
Section D	**Retaining Walls, Noise Walls, and Slope Protection**		
D-1a	Reinforced Concrete Retaining Wall Type 1 and 1 SW	1/23/02	*2 Sheets*
D-1b	Reinforced Concrete Retaining Wall Type 2 and 2 SW	10/6/99	*2 Sheets*
D-1c	Reinforced Concrete Retaining Wall Type 3 and 3 SW	10/6/99	*2 Sheets*
D-1d	Reinforced Concrete Retaining Wall Type 4 and 4 SW	10/6/99	*2 Sheets*
D-1e	Reinforced Concrete Retaining Wall Type 5 and 5 SW	1/23/02	*2 Sheets*
D-1f	Reinforced Concrete Retaining Wall Type 6 and 6 SW	10/6/99	*2 Sheets*
D-2.02-00	Noise Barrier Wall Type 1 (CIP Conc. on Trench Footing)	11/10/05	
D-2.04-00	Noise Barrier Wall Type 2 (CIP Conc. on Spread Footing)	11/10/05	*2 Sheets*
D-2.06-00	Noise Barrier Wall Type 3 (… on Offset Spread Footing)	11/10/05	*2 Sheets*
D-2.08-00	Noise Barrier Wall Type 4 (CIP Conc. on Shaft Foundation)	11/10/05	*2 Sheets*
D-2.10-00	Noise Barrier Wall Type 5 (CIP Conc. with Traffic Barrier on Trench Footing)	11/10/05	
D-2.12-00	Noise Barrier Wall Type 5SS (CIP Conc. w/ Single Slope Traffic Barrier on Trench Footing)	11/10/05	
D-2.14-00	Noise Barrier Wall Type 6 (CIP Conc. with Traffic Barrier on Spread Footing)	11/10/05	
D-2.16-00	Noise Barrier Wall Type 6SS (CIP Conc. w/ Single Slope Traffic Barrier on Spread Footing)	11/10/05	
D-2.18-00	Noise Barrier Wall Type 7 (CIP Conc. with Traffic Barrier on Shaft Foundation)	11/10/05	
D-2.20-00	Noise Barrier Wall Type 7SS (CIP Conc. w/ Single Slope Traffic Barrier on Shaft Fdn.)	11/10/05	
D-2.30-00	Noise Barrier Wall Type 8 (Precast Conc. on Trench Footing)	11/10/05	
D-2.32-00	Noise Barrier Wall Type 9 (Precast Conc. on Spread Footing)	11/10/05	*2 Sheets*
D-2.34-00	Noise Barrier Wall Type 10 (… on Offset Spread Footing)	11/10/05	*2 Sheets*
D-2.36-00	Noise Barrier Wall Type 11 (... on Shaft Foundation)	11/10/05	*3 Sheets*
D-2.38-00	Noise Barrier Wall Type 12 (Precast Conc. with Traffic Barrier on Trench Footing)	11/10/05	
D-2.40-00	Noise Barrier Wall Type 12SS (Precast w/ Single Slope Traffic Barrier on Trench Footing)	11/10/05	
D-2.42-00	Noise Barrier Wall Type 13 (Precast Conc. with Traffic Barrier on Spread Footing)	11/10/05	
D-2.44-00	Noise Barrier Wall Type 13SS (Precast w/ Single Slope Traffic Barrier on Spread Footing)	11/10/05	
D-2.46-00	Noise Barrier Wall Type 14 (Precast Conc. w/ Traffic Barrier on Shaft Foundation)	11/10/05	*2 Sheets*
D-2.48-00	Noise Barrier Wall Type 14SS (Precast Conc. w/ Single Slope Traffic Barrier on Shaft Fdn.)	11/10/05	*2 Sheets*
D-2.60-00	Noise Barrier Wall Type 16 (Masonry on Trench Footing)	11/10/05	*2 Sheets*
D-2-62-00	Noise Barrier Wall Type 17 (Masonry on Spread Footing)	11/10/05	*2 Sheets*
D-2.64-00	Noise Barrier Wall Type 18 (Masonry on Offset Spread Ftg.)	11/10/05	*2 Sheets*
D-2.66-00	Noise Barrier Wall Type 19 (Masonry on Shaft with Grade Beam Foundation)	11/10/05	*2 Sheets*
D-2.68-00	Noise Barrier Wall Type 20 (Masonry on Shaft Foundation)	11/10/05	*2 Sheets*
D-2.78-00	Noise Barrier Wall Type 15 (Timber Panel on Trench Footing)	11/10/05	
D-2.80-00	Noise Barrier Wall Access Door Type 1 (Cast-In-Place)	11/10/05	
D-2.82-00	Noise Barrier Wall Access Door Type 2 (Cast-In-Place)	11/10/05	*2 Sheets*
D-2.84-00	Noise Barrier Wall Access Door Type 3 (Precast)	11/10/05	
D-2.86-00	Noise Barrier Wall Access Door Type 4 (Precast)	11/10/05	*2 Sheets*
D-2.88-00	Noise Barrier Wall Access Door Type 5 (Masonry)	11/10/05	

EFFECTIVE: APRIL 2, 2007 TO JANUARY 6, 2008
EFFECTIVE: APRIL 2, 2007 TO JANUARY 6, 2008

EFFECTIVE: APRIL 2, 2007 TO JANUARY 6, 2008
EFFECTIVE: APRIL 2, 2007 TO JANUARY 6, 2008

Contents

Plan No.	Plan Title	Publication Approval Date	
D-2.92-00	Noise Barrier Wall Access Door & Frame	11/10/05	*2 Sheets*
D-3	Permanent Geosynthetic Wall: Types 1 ~ 6	7/13/05	*3 Sheets*
D-3a	Permanent Geosynthetic Wall: Fascia and Facing	6/30/04	
D-3b	Permanent Geosynthetic Wall: Single Slope Barrier	6/30/04	
D-3c	Permanent Geosynthetic Wall: F-Shape Barrier	6/30/04	
D-4	Backfill and Drainage for Retaining Walls	12/11/98	
D-6	Gabions	6/19/98	
D-7	Wire Mesh Slope Protection	10/6/99	
D-7a	Wire Mesh Slope Protection Anchors	10/6/99	
D-9	Concrete Slope Protection	12/11/98	*2 Sheets*
Section E	**Bridges and Trestles**		
E-1	Date Numeral Placement on Bridge Traffic Barrier	2/21/07	
E-2	Pile or Frame Detour Bridge with Asphalt Overlay	5/29/98	*2 Sheets*
E-4	Precast Prestressed Concrete Piles	8/27/03	
E-4a	Precast Prestressed Concrete Piles: Handling & Capping	8/27/03	
Section F	**Curbs, Approaches, Gutters, and Sidewalks**		
F-10.12-00	Cement Concrete Curbs	12/20/06	
F-10.16-00	Cement Concrete Curb and Gutter Pan	12/20/06	
F-10.40-00	Extruded Curb Placement	1/23/07	
F-10.42-00	Extruded Curb	1/23/07	
F-10.62-00	Precast Concrete Sloped Mountable Curb	1/23/07	*2 Sheets*
F-10.64-00	Precast Concrete Dual Faced Sloped Mountable Curb	1/23/07	
F-30.10-00	Cement Concrete Sidewalk	1/23/07	
F-40.10-00	Sidewalk Ramp Type 1, with Layouts	2/7/07	
F-40.12-00	Sidewalk Ramp Type 2, with Layout	2/7/07	
F-40.14-00	Sidewalk Ramp Type 3A, with Layout	2/7/07	
F-40.15-00	Sidewalk Ramp Type 3B, with Layout	2/7/07	
F-40.16-00	Sidewalk Ramp Type 4A, with Layout	2/7/07	
F-40.18-00	Sidewalk Ramp Type 4B, with Layout	2/7/07	
F-80.10-00	Cement Concrete Driveway Entrance: Types 1, 2, 3, & 4	1/23/07	*2 Sheets*
Section G	**Signs and Sign Supports**		
G-1	Ground Mounted Sign Placement	2/21/07	
G-2	Sign Bridge	6/4/02	*3 Sheets*
G-2a	Sign Bridge Foundations	6/4/02	
G-3	Cantilever Sign Structure (Truss-Type)	11/9/05	*4 Sheets*
G-3a	Cantilever Sign Structure (Truss-Type) Foundation Type 1	11/9/05	*2 Sheets*
G-3b	Cantilever Sign Structure (Truss-Type) Fdn., Types 2 & 3	11/9/05	*2 Sheets*
G-4a	Timber Sign Supports	11/9/05	*3 Sheets*
G-4b	Roadside Signs on Laminated Wood Box Posts	6/30/04	
G-6	Maintenance Walkway for Overhead Sign Structures	8/27/03	*3 Sheets*
G-6a	Maintenance Walkway Mounting for Monotube Overhead Sign Structure	8/27/03	*3 Sheets*
G-6b	Maintenance Walkway Mounting for Truss-Type Overhead Sign Structure	8/27/03	*2 Sheets*
G-7	Milepost	6/8/06	
G-8a	Steel Sign Support, Foundation Details	12/15/04	

EFFECTIVE: APRIL 2, 2007 TO JANUARY 6, 2008
EFFECTIVE: APRIL 2, 2007 TO JANUARY 6, 2008

EFFECTIVE: APRIL 2, 2007 TO JANUARY 6, 2008
EFFECTIVE: APRIL 2, 2007 TO JANUARY 6, 2008

Contents

Plan No.	Plan Title	Publication Approval Date	
G-8b	Steel Sign Support, Types TP-A & TP-B, Installation Details	11/9/05	*2 Sheets*
G-8c	Steel Sign Support, Types PL, PL-T, & PL-U, Inst. Det.	8/18/04	*2 Sheets*
G-8d	Steel Sign Support Type AS, Installation Details	12/15/04	
G-8e	Steel Sign Support Type AP, Installation Details	8/18/04	
G-8f	Steel Sign Support, Types ST-1 ~ ST-4, Installation Details	11/9/05	
G-8g	Steel Sign Support, Types SB-1 & SB-2, Installation Details	11/9/05	*2 Sheets*
G-9a	Overhead Sign Mounting Details	6/25/02	*4 Sheets*
G-9b	Sign Installation on Signal and Light Standards	6/8/06	*2 Sheets*
G-9d	Sign Bracing	6/8/06	*2 Sheets*

Section H Delineators and Miscellaneous Construction

H-1	Guide Posts	1/10/02	
H-1a	Guide Post Placement Grade Intersection	4/14/00	
H-1b	Guide Post Placement for Interchanges	6/21/06	
H-1c	Guide Post Placement for Horizontal Curves	3/4/05	
H-1d	Miscellaneous Guide Post Placement	6/21/06	
H-1e	Guide Post Placement for Bridges	6/21/06	
H-4	Shoulder Rumble Strip Type 1, for Divided Highways	8/18/04	*4 Sheets*
H-4a	Shoulder Rumble Strip, Types 2, 3, and 4, for Undivided Highways	2/25/05	*2 Sheets*
H-4b	Center Line Rumble Strip	10/24/06	*2 Sheets*
H-6	Survey Monuments Type 1 and Type 2	10/29/03	
H-7	Monument Case and Cover	8/10/98	
H-8	Slope Treatment	9/18/98	
H-9	Embankment at Bridge Ends	4/18/97	
H-10	Cement Concrete Stairway Construction Details	5/29/98	
H-12	Mailbox Support Type 1	2/25/05	*2 Sheets*
H-12a	Mailbox Support Type 2	2/25/05	*2 Sheets*
H-12b	Mailbox Support Type 3	2/25/05	*2 Sheets*
H-13	Bollard Type 1	2/25/05	
H-13a	Bollard Type 2	2/25/05	
H-14	Survey Stakes	2/9/05	*2 Sheets*

Section I Roadside and Site Development

I-1	Rest Area Septic Tank	7/18/97	
I-2	Crest Gage	4/23/99	
I-3	Automated Ground Water Monitoring Well	8/20/99	
I-4	Silt Fence	7/17/03	
I-5	Erosion Control At Culvert Ends	7/17/03	
I-6	Temporary Silt Fence for Inlet Protection In Unpaved Areas	7/17/03	
I-7	Storm Drain Inlet Protection	7/17/03	
I-8	Wattle Installation On Slope	7/17/03	
I-9	Straw Bale Barrier	7/17/03	
I-10	Geotextile Encased Check Dam Installation	7/17/03	
I-11	Check Dams	9/11/03	
I-12	Erosion Control Blanket Placement On Slope	7/17/03	
I-13	Erosion Control Blanket Placement In Channel	7/17/03	
I-14	Miscellaneous Erosion Control Details	7/17/03	
I-15	High Visibility Fence	1/23/07	

EFFECTIVE: APRIL 2, 2007 TO JANUARY 6, 2008
EFFECTIVE: APRIL 2, 2007 TO JANUARY 6, 2008

EFFECTIVE: APRIL 2, 2007 TO JANUARY 6, 2008
EFFECTIVE: APRIL 2, 2007 TO JANUARY 6, 2008

Contents

Plan No.	Plan Title	Publication Approval Date	
Section J	**Illumination and Signals**		
J-1b	Steel Light Standard Base Details	10/8/99	*3 Sheets*
J-1c	Slip Base Adaptor for 4-Bolt Light Standard Base	4/24/98	
J-1d	Steel Light Standard, Barrier Mounted Base	1/11/06	
J-1e	Light Standard Wiring Details	1/11/06	
J-1f	Timber Light Standards	6/23/00	
J-3	Type A, B, and C Service Lighting Details	8/1/97	*2 Sheets*
J-3b	Service Cabinet Type B Modified (0 - 200 Amp Type, 120/240 Single Phase)	3/4/05	*2 Sheets*
J-3c	Service Cabinet Type D (0 - 200 Amp Type, 120/240 Single Phase)	6/24/02	
J-3d	Service Cabinet Type E (0 - 200 Amp Type, 240/480 Single Phase)	11/5/03	
J-5	Pedestrian Pushbutton Details	8/1/97	
J-6c	Cabinet Foundation Details	4/24/98	
J-6f	Signal Head Mounting Details, Pole & Post Top Mountings	4/24/98	
J-6g	Signal Head Mounting Details, Mast Arm and Span Wire Mountings	12/12/02	
J-6h	Miscellaneous Signal Details	4/24/98	
J-7a	Signal Standard Type Designations and Types PPB, PS, I, RM, and FB Details	9/12/01	*2 Sheets*
J-7c	Strain Pole Standards Type IV and V	6/19/98	
J-7d	Span Wire Installation	4/24/98	
J-8a	Type 1 Induction Loop	5/20/04	
J-8b	Type 2 Induction Loop	5/20/04	*2 Sheets*
J-8c	Type 3 Induction Loop	5/20/04	*3 Sheets*
J-8d	Induction Loop Details	5/20/04	*2 Sheets*
J-9a	Typical Grounding Details	4/24/98	
J-10	Electrical Conduit Placement	7/18/97	
J-11a	Standard Junction Box, Types 1 & 2	9/2/05	
J-11b	Heavy Duty Junction Box, Types 4, 5, & 6	9/2/05	*2 Sheets*
J-11c	Standard Duty Junction Box, Types 7 & 8	6/21/06	*2 Sheets*
J-12	Sign Post-Mounted Junction Box	11/8/05	*2 Sheets*
J-15a	Pull Box	10/4/05	*2 Sheets*
J-15b	Cable Vault	10/4/05	*2 Sheets*
J-16a	Junction Box, Traffic Barrier Mounted	3/4/05	
J-16b	Conduit Installation in Retaining Wall Traffic Barrier	9/2/05	
J-18	Permanent Traffic Recorder Site Installations	9/2/05	*2 Sheets*
J-19	Weigh-In-Motion Site Installation	9/2/05	
J-20	Permanent Traffic Recorder and Weigh-In-Motion Details	9/2/05	*3 Sheets*
Section K	**Work Zone Traffic Control Plans**		
K-10.20-00	Road Closure, with Diversion	2/15/07	
K-10.40-00	Road Closure, with Off-Site Detour	2/15/07	
K-20.20-00	Lane Closure, without Flaggers ~ Low Volume Road	2/15/07	
K-20.40-00	Lane Closure, with Flagger Control	2/15/07	
K-20.60-00	Lane Closure, with Pilot Car	2/15/07	
K-22.20-00	Lane Shift, onto Passing Lane	2/15/07	
K-24.20-00	Single Lane Closure, with Encroachment	2/15/07	
K-24.40-00	Double Lane Closure, on Multilane Roadway	2/15/07	
K-24.60-00	Single Lane Closure, on Multilane Roadway	2/15/07	
K-24.80-00	Single Lane Closure, with Temporary Concrete Barrier	2/15/07	

EFFECTIVE: APRIL 2, 2007 TO JANUARY 6, 2008
EFFECTIVE: APRIL 2, 2007 TO JANUARY 6, 2008

EFFECTIVE: APRIL 2, 2007 TO JANUARY 6, 2008
EFFECTIVE: APRIL 2, 2007 TO JANUARY 6, 2008

Contents

Plan No.	Plan Title	Publication Approval Date	
K-26.20-00	Lane Shift, onto Two-way Left Turn Lane	2/15/07	
K-26.40-00	Left and Center Lane Closure ~ Two-Way Left Turn Lane	2/15/07	
K-30.20-00	Intersection ~ Lane Shift on Three Lane Two-Way Left Turn Lane	2/15/07	
K-30.40-00	Intersection ~ Lane Shift on Five Lane Two-Way Left Turn Lane	2/15/07	
K-32.20-00	Intersection ~ Right Lane Closure, Far Side	2/15/07	
K-32.40-00	Intersection ~ Left Lane Closure, Far Side	2/15/07	
K-32.60-00	Intersection ~ Multiple Lane Closure	2/15/07	
K-32.80-00	Intersection ~ Half Road Closure with Lane Shift	2/15/07	
K-34.20-00	Intersection ~ Pedestrian Detour	2/15/07	
K-36.20-00	Intersection ~ Shoulder Work	2/15/07	
K-40.20-00	Shoulder Closure ~ High Speed Roadway (45 MPH or Higher)	2/15/07	
K-40.40-00	Shoulder Closure ~ Low Speed Roadway (40 MPH or Less)	2/15/07	
K-40.60-00	Shoulder Closure ~ Short Duration	2/15/07	
K-40.80-00	Work Beyond the Shoulder	2/15/07	
K-55.20-00	Emergency ~ Passable Hazard	2/15/07	
K-60.20-00	Speed Zone, Supplemental Signing ~ Chip Seal Project	2/15/07	
K-60.40-00	Motorcycle, Supplemental Signing	2/15/07	
K-70.20-00	Temporary Channelization	2/15/07	
K-80.10-00	Class A Construction Signing Installation	2/21/07	
K-80.20-00	Type 3 Barricade	12/20/06	*2 Sheets*
K-80.30-00	Alternative Temporary Conc. Barrier (F-Shape)	2/21/07	
K-80.35-00	Temporary Conc. Barrier Anchoring	2/21/07	
K-80.37-00	Temporary Conc. Barrier Anchoring ~ Narrow	2/21/07	

Section L Fence and Glare Screen

L-10.10-00	Wire Fence Types 1 & 2, and Wire Gates	2/21/07	*2 Sheets*
L-20.10-00	Chain Link Fence, Types 3 and 4	2/7/07	*2 Sheets*
L-30.10-00	Chain Link Gate	2/7/07	*2 Sheets*
L-40.10-00	Glare Screen Type 1, Design A	2/21/07	*2 Sheets*
L-40.15-00	Glare Screen Type 1, Design B	2/21/07	
L-40.20-00	Glare Screen Type 2 (Chain Link with Slats)	2/21/07	
L-70.10-00	Access Control Gate	1/30/07	
L-70.20-00	Access Control Double Gate	1/30/07	

Section M Pavement Marking

M-1.20-01	Ramp Channelization: Single Lane	1/30/07	
M-1.40-01	Ramp Channelization: Two Lane	1/30/07	
M-1.60-01	Ramp Channelization: Collector Distributor Road	1/30/07	
M-1.80-01	Ramp Channelization: Parallel On & Weaving Section	1/30/07	
M-2.20-01	Gore Area Marking Layouts	1/30/07	
M-2.40-01	Gore Area Supplement with Type 2 Raised Pavement Markers	1/30/07	
M-2.60-01	Gore Area Substitution with Types 1 & 2 Raised Pavement Markers	1/30/07	
M-3.10-01	Left Turn Channelization	1/30/07	
M-3.20-01	Left Turn Channelization: Reduced Tapers	1/30/07	
M-3.30-01	Left Turn Channelization: Tee Intersection and Back-to-back Turn Lanes	1/30/07	

EFFECTIVE: APRIL 2, 2007 TO JANUARY 6, 2008
EFFECTIVE: APRIL 2, 2007 TO JANUARY 6, 2008

EFFECTIVE: APRIL 2, 2007 TO JANUARY 6, 2008
EFFECTIVE: APRIL 2, 2007 TO JANUARY 6, 2008

Contents

Plan No.	Plan Title	Publication Approval Date	
M-3.40-01	Two-way Left-Turn and Median Channelization	1/30/07	
M-3.50-01	Double Left Turn Channelization	1/30/07	
M-5.10-01	Right Turn Channelization	1/30/07	
M-7.50-01	High Occupancy Vehicle (HOV) Lane Symbol Layout	1/30/07	
M-9.50-01	Bicycle Lane Symbol Layout	1/30/07	
M-11.10-01	Railroad Crossing Layout	1/30/07	
M-15.10-01	Crosswalk Layout	2/6/07	
M-17.10-01	Parking Space Layouts	1/30/07	
M-20.10-01	Longitudinal Marking Patterns	1/30/07	
M-20.20-01	Profiled and Embossed Plastic Lines	1/30/07	
M-20.30-01	Longitudinal Marking Supplement with Raised Pavement Markers	1/30/07	
M-20.40-01	Longitudinal Marking Supplement with RPM's ~ Turn Lanes	1/30/07	*2 Sheets*
M-20.50-01	Longitudinal Marking Substitution with Raised Pavement Markers	1/30/07	
M-24.20-01	Symbol Markings: Traffic Arrows for High Speed Roadways	5/31/06	*3 Sheets*
M-24.40-01	Symbol Markings: Traffic Arrows for Low Speed Roadways	5/31/06	*2 Sheets*
M-24.60-02	Symbol Markings: Miscellaneous	2/6/07	*2 Sheets*

EFFECTIVE: APRIL 2, 2007 TO JANUARY 6, 2008
EFFECTIVE: APRIL 2, 2007 TO JANUARY 6, 2008
EFFECTIVE: APRIL 2, 2007 TO JANUARY 6, 2008
EFFECTIVE: APRIL 2, 2007 TO JANUARY 6, 2008

EFFECTIVE: APRIL 2, 2007 TO JANUARY 6, 2008

DRAWN BY: KELLY ALLEN

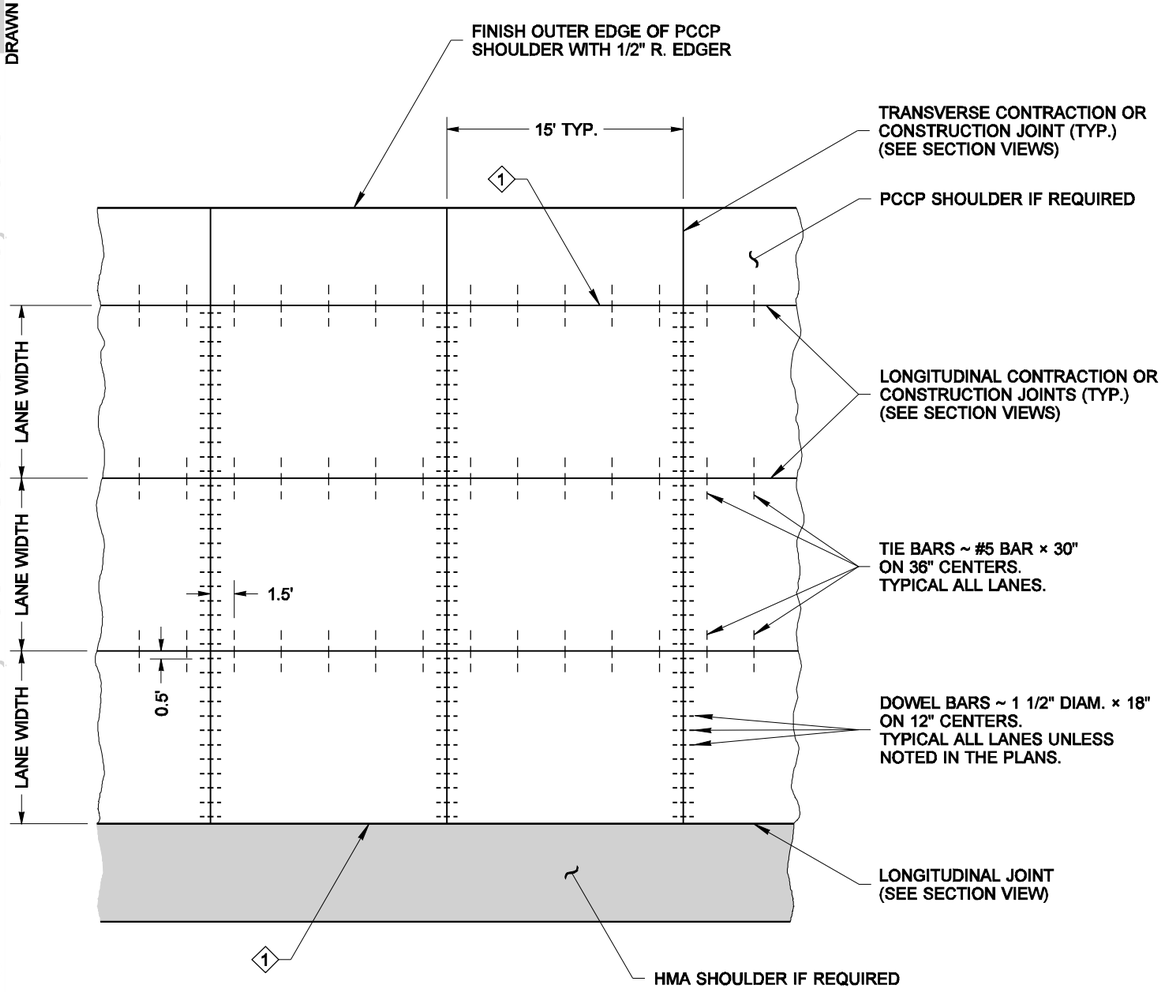

PLAN VIEW

1 FINISH OUTER EDGE OF PCCP LANE WITH 1/2" R. EDGER IF SHOULDER SHALL BE UNPAVED

CEMENT CONCRETE PAVEMENT JOINTS

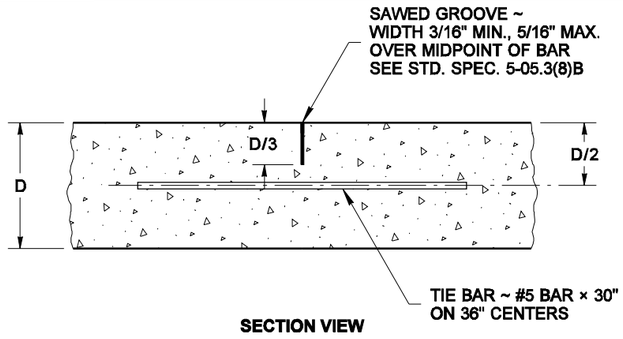

SECTION VIEW

LONGITUDINAL CONTRACTION JOINT

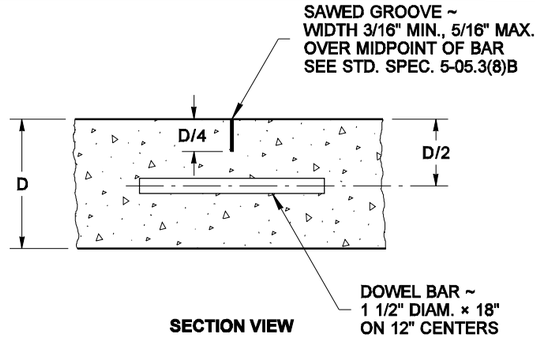

SECTION VIEW

TRANSVERSE CONTRACTION JOINT

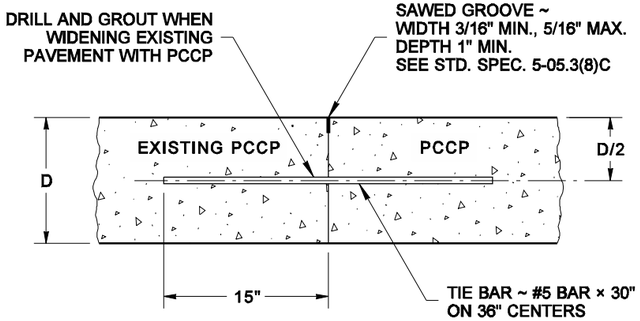

SECTION VIEW

PCCP TO PCCP
LONGITUDINAL CONSTRUCTION JOINT

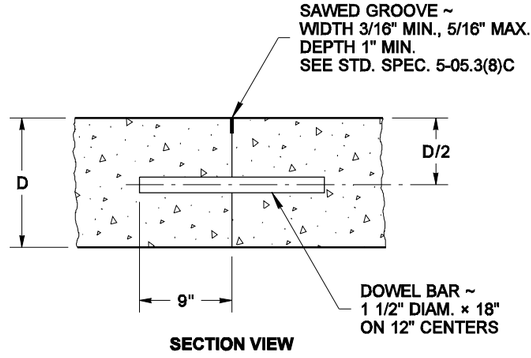

SECTION VIEW

TRANSVERSE CONSTRUCTION JOINT

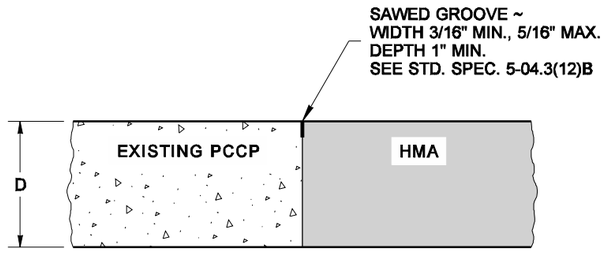

SECTION VIEW

PCCP TO HMA
LONGITUDINAL JOINT

KEVIN J. DAYTON
STATE OF WASHINGTON
24035
REGISTERED
PROFESSIONAL ENGINEER

EXPIRES JULY 27, 2007

NOTE: THIS PLAN IS NOT A LEGAL ENGINEERING DOCUMENT BUT AN ELECTRONIC DUPLICATE. THE ORIGINAL, SIGNED BY THE ENGINEER AND APPROVED FOR PUBLICATION, IS KEPT ON FILE AT THE WASHINGTON STATE DEPARTMENT OF TRANSPORTATION. A COPY MAY BE OBTAINED UPON REQUEST.

CEMENT CONCRETE PAVEMENT JOINTS

STANDARD PLAN A-1

SHEET 1 OF 1 SHEET

APPROVED FOR PUBLICATION

Harold J. Peterfeso — STATE DESIGN ENGINEER — *10-24-06* — DATE

Washington State Department of Transportation

EFFECTIVE: APRIL 2, 2007 TO JANUARY 6, 2008

EFFECTIVE: APRIL 2, 2007 TO JANUARY 6, 2008

DRAWN BY: FERN LIDDELL

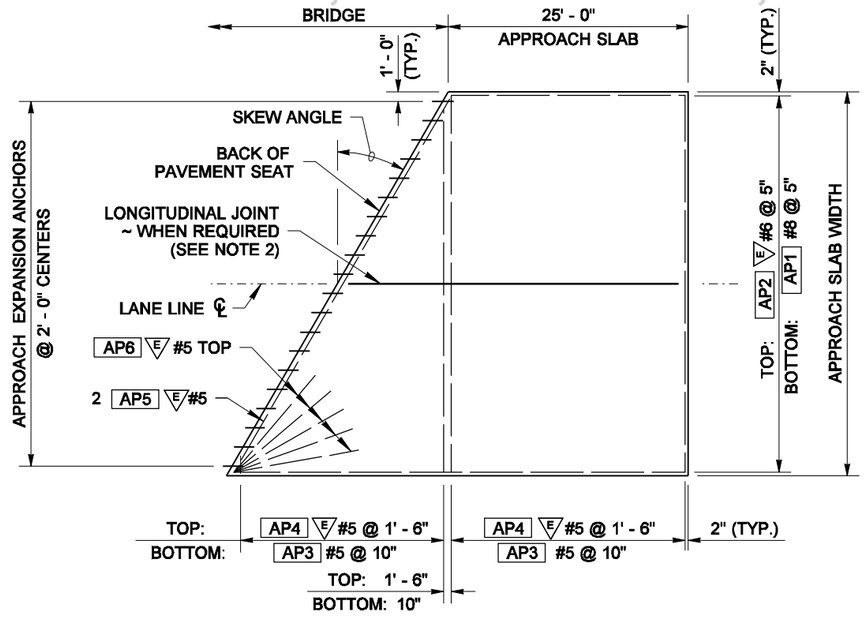

PLAN

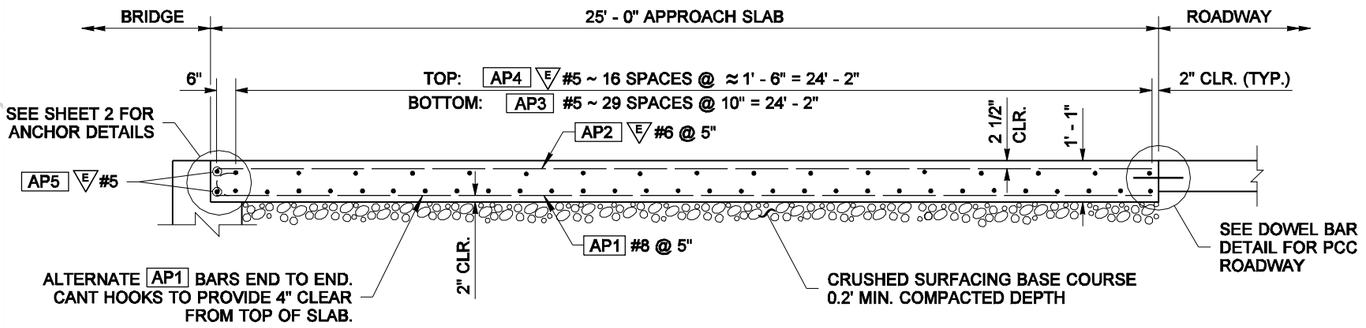

LONGITUDINAL SECTION

BAR LIST FOR STANDARD 10' x 25' APP. SLAB QUANTITY MODULE				
MARK	LOCATION	SIZE	LENGTH	QTY.
AP1	LONGITUDINAL BOTTOM	#8	25' - 7"	24
AP2	LONGITUDINAL TOP	E #6	24' - 8"	24
AP3	TRANSVERSE BOTTOM	#5	9' - 8"	30
AP4	TRANSVERSE TOP	E #5	9' - 8"	17
AP5	TRANSVERSE END BAR	E #5	9' - 8"	2

ALL REINFORCING BARS SHOWN ON THIS SHEET SHALL BE AASHTO M-31, UNLESS NOTED OTHERWISE.

E = EPOXY COATED REINFORCING STEEL

APPROXIMATE QUANTITIES (PER SY) FOR SLAB (BASED ON QUANTITY MODULE)	
SLAB EPOXY COATED REINFORCING BARS (TOP MAT)	38.52 LBS/SY
SLAB REINFORCING BARS (BOTTOM MAT)	72.38 LBS/SY
CONCRETE (CU. YDS.)	0.361 CY/SY
APPROACH ANCHORS AND PCC ROADWAY DOWELS	AS REQUIRED
10 - AP6 E #5 (IF REQUIRED)	105 LBS.

BENDING DETAIL FOR QUANTITIES

(ALL DIMENSIONS ARE OUT TO OUT)

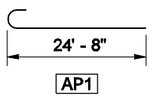

NOTES

1. All edges of the approach slab shall have 1/2" radii except the longitudinal edge of the preceeding pour of a LONGITUDINAL CONSTRUCTION JOINT.
2. Longitudinal joints shall be placed on lane lines and shall be constructed and sealed in accordance with Standard Specification Section 5-05.3(8). Joints may be either a sawcut crack control joint or a construction joint. Sawcut joints shall terminate 1' - 0" before reaching edge of slab and must be saw cut as soon as possible after placement of concrete.
   (A) Approach slabs less than 40' wide -- no joint is required.
   (B) Approach slabs wider than 40' -- one or more joints are required to divide the slab into approximately 24' wide sections.

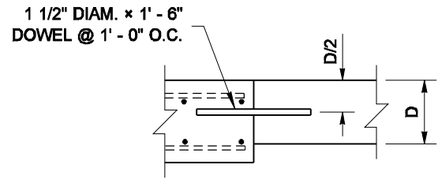

INSERT DOWELS PARALLEL TO CENTER LINE ALONG TRANSVERSE CONSTRUCTION JOINT.

DOWEL BAR DETAIL FOR PCC ROADWAY

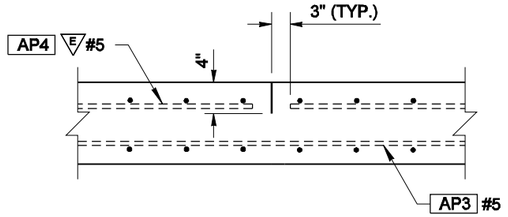

LONGITUDINAL CRACK CONTROL JOINT

SEE NOTE 2

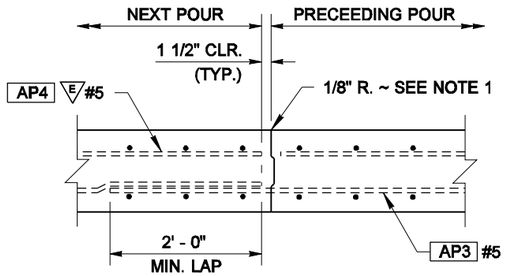

LONGITUDINAL CONSTRUCTION JOINT

SEE NOTE 2

FOR LOCAL AGENCY USE ONLY

BIJAN KHALEGHI
STATE OF WASHINGTON
27695
REGISTERED
PROFESSIONAL ENGINEER

EXPIRES AUGUST 23, 2008

NOTE: THIS PLAN IS NOT A LEGAL ENGINEERING DOCUMENT BUT AN ELECTRONIC DUPLICATE. THE ORIGINAL, SIGNED BY THE ENGINEER AND APPROVED FOR PUBLICATION, IS KEPT ON FILE AT THE WASHINGTON STATE DEPARTMENT OF TRANSPORTATION. A COPY MAY BE OBTAINED UPON REQUEST.

BRIDGE APPROACH SLAB

STANDARD PLAN A-2

SHEET 1 OF 2 SHEETS

APPROVED FOR PUBLICATION

Kevin J. Dayton — STATE DESIGN ENGINEER

12-20-06 — DATE

Washington State Department of Transportation

EFFECTIVE: APRIL 2, 2007 TO JANUARY 6, 2008

EFFECTIVE: APRIL 2, 2007 TO JANUARY 6, 2008

DRAWN BY: FERN LIDDELL

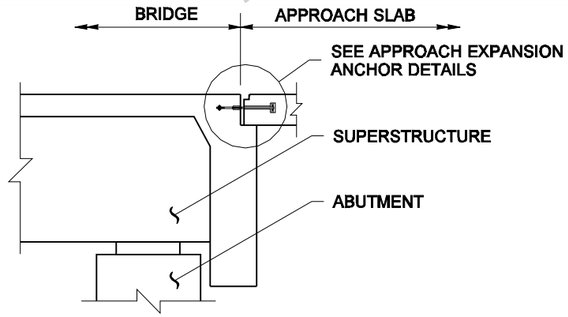

LONGITUDAL SECTION

SEMI-INTEGRAL TYPE ABUTMENT

NOTE

PAINT THE METAL COMPONENTS OF THE APPROACH EXPANSION ANCHOR WITH ONE COAT OF FORMULA A-11-99. PAINT IN ACCCORDANCE WITH STD. SPEC. 9-08.2

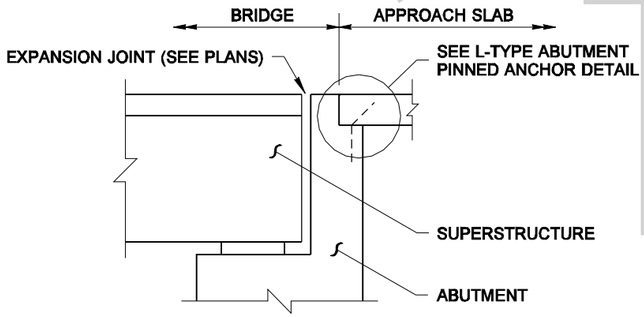

LONGITUDAL SECTION

L - TYPE ABUTMENT

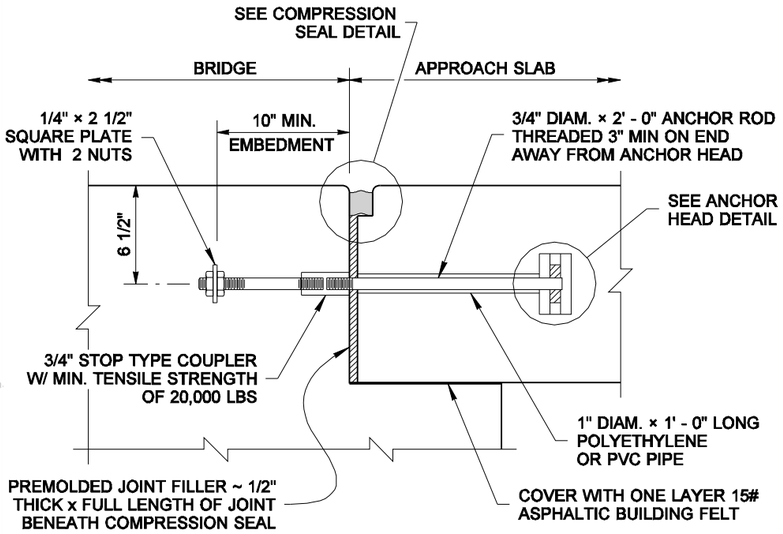

APPROACH EXPANSION ANCHOR ~ METHOD A

SEMI-INTEGRAL TYPE ONLY

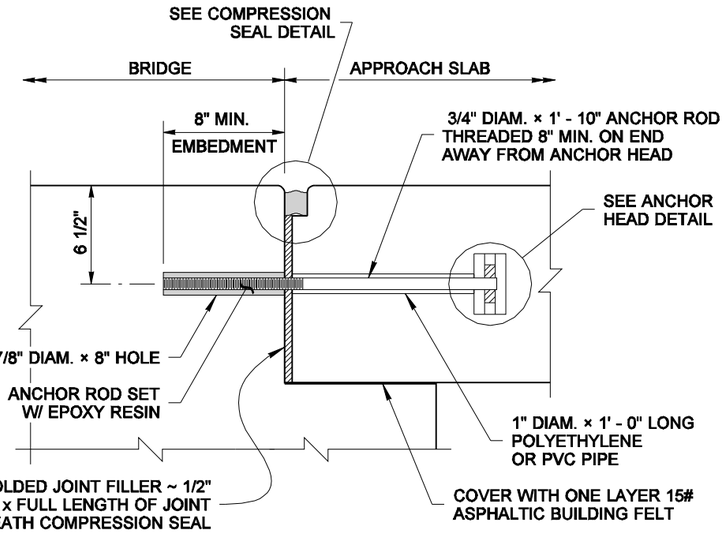

APPROACH EXPANSION ANCHOR ~ METHOD B

SEMI-INTEGRAL TYPE ONLY

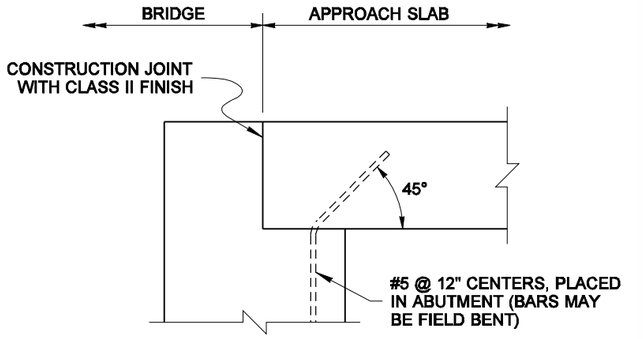

L - TYPE ABUTMENT PINNED ANCHOR DETAIL

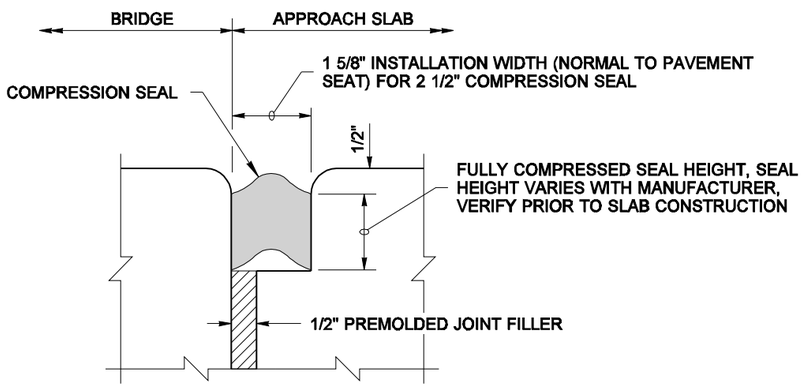

COMPRESSION SEAL DETAIL

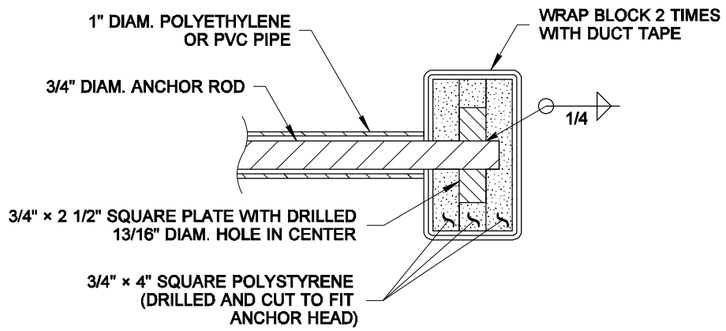

ANCHOR HEAD DETAIL

FOR LOCAL AGENCY USE ONLY

BIJAN KHALEGHI
STATE OF WASHINGTON
27695
REGISTERED
PROFESSIONAL ENGINEER

EXPIRES AUGUST 23, 2008

NOTE: THIS PLAN IS NOT A LEGAL ENGINEERING DOCUMENT BUT AN ELECTRONIC DUPLICATE. THE ORIGINAL, SIGNED BY THE ENGINEER AND APPROVED FOR PUBLICATION, IS KEPT ON FILE AT THE WASHINGTON STATE DEPARTMENT OF TRANSPORTATION. A COPY MAY BE OBTAINED UPON REQUEST.

BRIDGE APPROACH SLAB

STANDARD PLAN A-2

SHEET 2 OF 2 SHEETS

APPROVED FOR PUBLICATION

Kevin J. Dayton — STATE DESIGN ENGINEER — *12-20-06* — DATE

Washington State Department of Transportation

EFFECTIVE: APRIL 2, 2007 TO JANUARY 6, 2008

EFFECTIVE: APRIL 2, 2007 TO JANUARY 6, 2008
EFFECTIVE: APRIL 2, 2007 TO JANUARY 6, 2008

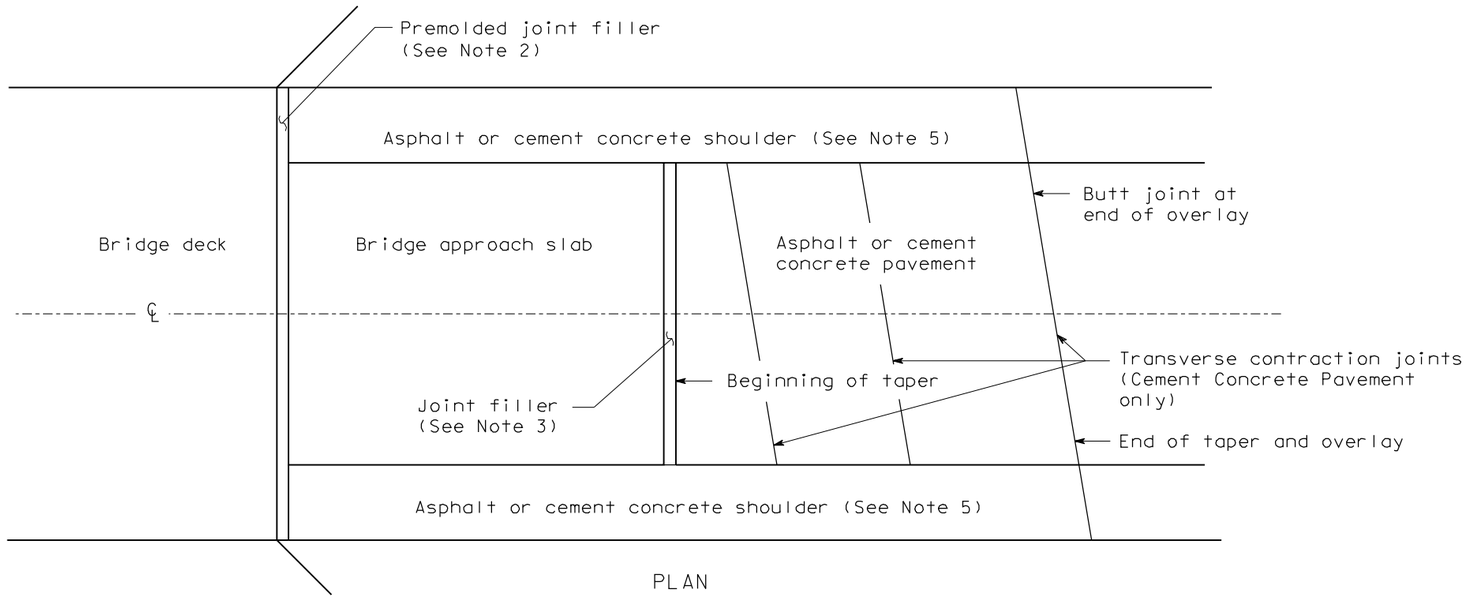

PLAN

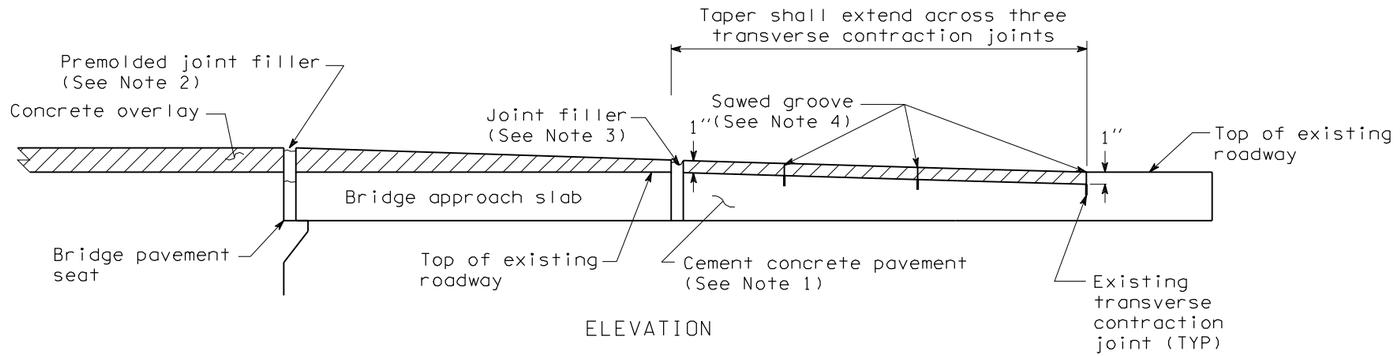

ELEVATION

CASE 1

CEMENT CONCRETE PAVEMENT WITH ASPHALT
OR CEMENT CONCRETE SHOULDER

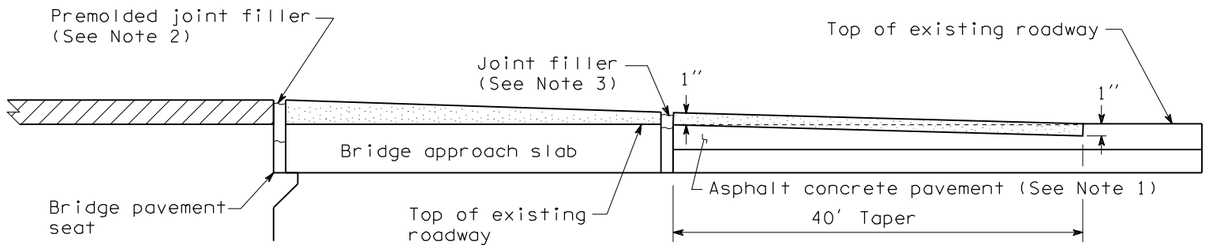

CASE 2

ASPHALT CONCRETE PAVEMENT
(Diaphragm cast on structure)

KEVIN J. DAYTON
STATE OF WASHINGTON
24035
REGISTERED
PROFESSIONAL ENGINEER

EXPIRES JULY 27, 2003

NOTE: THIS PLAN IS NOT A LEGAL ENGINEERING DOCUMENT BUT AN ELECTRONIC DUPLICATE. THE ORIGINAL, SIGNED BY THE ENGINEER AND APPROVED FOR PUBLICATION, IS KEPT ON FILE AT THE WASHINGTON STATE DEPARTMENT OF TRANSPORTATION. A COPY MAY BE OBTAINED UPON REQUEST.

TRANSITION FROM CONCRETE OVERLAY

STANDARD PLAN A-3

SHEET 1 OF 2 SHEETS

APPROVED FOR PUBLICATION

Harold J. Peterfeso — STATE DESIGN ENGINEER — *05-30-02* — DATE

Washington State Department of Transportation

DATE	REVISION	BY
05/2002	CORRECTED TAPER LENGTH FROM 40″ TO 40′.	RG

EFFECTIVE: APRIL 2, 2007 TO JANUARY 6, 2008
EFFECTIVE: APRIL 2, 2007 TO JANUARY 6, 2008

EFFECTIVE: APRIL 2, 2007 TO JANUARY 6, 2008

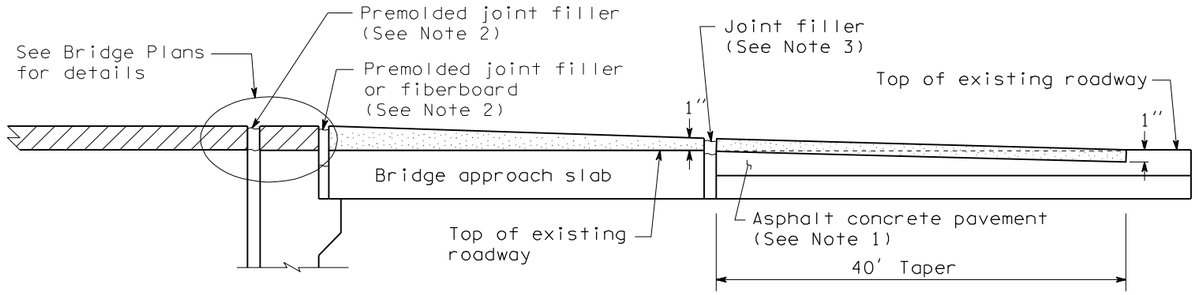

CASE 3

ASPHALT CONCRETE PAVEMENT
(L-Type Abutment)

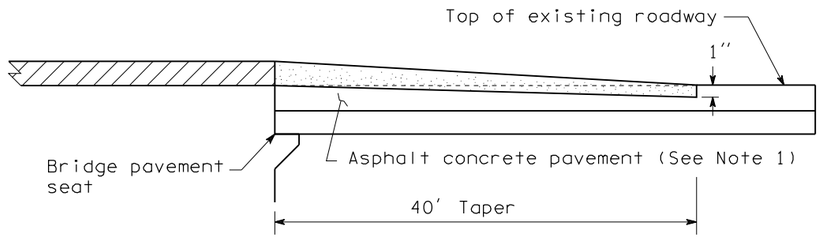

CASE 4

ASPHALT CONCRETE PAVEMENT

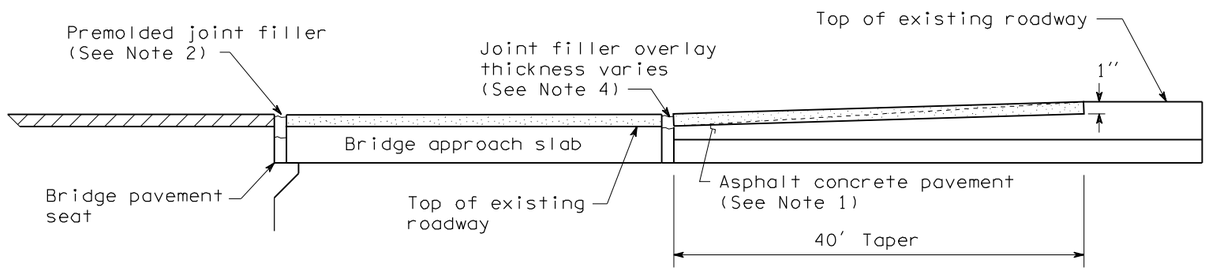

CASE 5

ASPHALT CONCRETE PAVEMENT
(ACP was on bridge and/or roadway
grade slopes up from bridge)

NOTES

1. Plane a taper into the existing pavement and shoulders (if paved). Depth shall taper from 0'' at the beginning of pavement, to 1'' at end of taper. Does not apply when exisitng pavement has been planed.

2. Before placing overlay, remove top 2'' of existing joint filler, or 3'' if existing joint is fiberboard, and block out the joint. After overlay, install new premolded joint filler. Top of joint filler shall be between 3/16'' and 3/8'' below overlay. When a compression seal is in place, see Bridge Plans.

3. Before placing overlay, block out the joint. After overlay, install premolded joint filler or rubberized asphalt filler. Top of joint filler shall be between 3/16'' and 3/8'' below overlay.

4. Full depth sawed grooves between 1/8'' and 1/4'' wide shall be placed directly over the existing sawed grooves in the cement concrete pavement and cement concrete shoulders.

5. Cement concrete shoulders shall be overlaid with cement concrete. Asphalt concrete shoulders shall be overlaid with asphalt concrete.

LEGEND

Concrete Overlay

Asphalt Concrete Overlay

KEVIN J. DAYTON
STATE OF WASHINGTON
24035
REGISTERED
PROFESSIONAL ENGINEER

EXPIRES JULY 27, 2003

NOTE: THIS PLAN IS NOT A LEGAL ENGINEERING DOCUMENT BUT AN ELECTRONIC DUPLICATE. THE ORIGINAL, SIGNED BY THE ENGINEER AND APPROVED FOR PUBLICATION, IS KEPT ON FILE AT THE WASHINGTON STATE DEPARTMENT OF TRANSPORTATION. A COPY MAY BE OBTAINED UPON REQUEST.

TRANSITION FROM CONCRETE OVERLAY

STANDARD PLAN A-3

SHEET 2 OF 2 SHEETS

APPROVED FOR PUBLICATION

Harold J. Peterfeso *05-30-02*

STATE DESIGN ENGINEER — DATE

Washington State Department of Transportation

DATE	REVISION	BY
05/2002	CORRECTED TAPER LENGTH FROM 40'' TO 40'.	RG

EFFECTIVE: APRIL 2, 2007 TO JANUARY 6, 2008

EFFECTIVE: APRIL 2, 2007 TO JANUARY 6, 2008

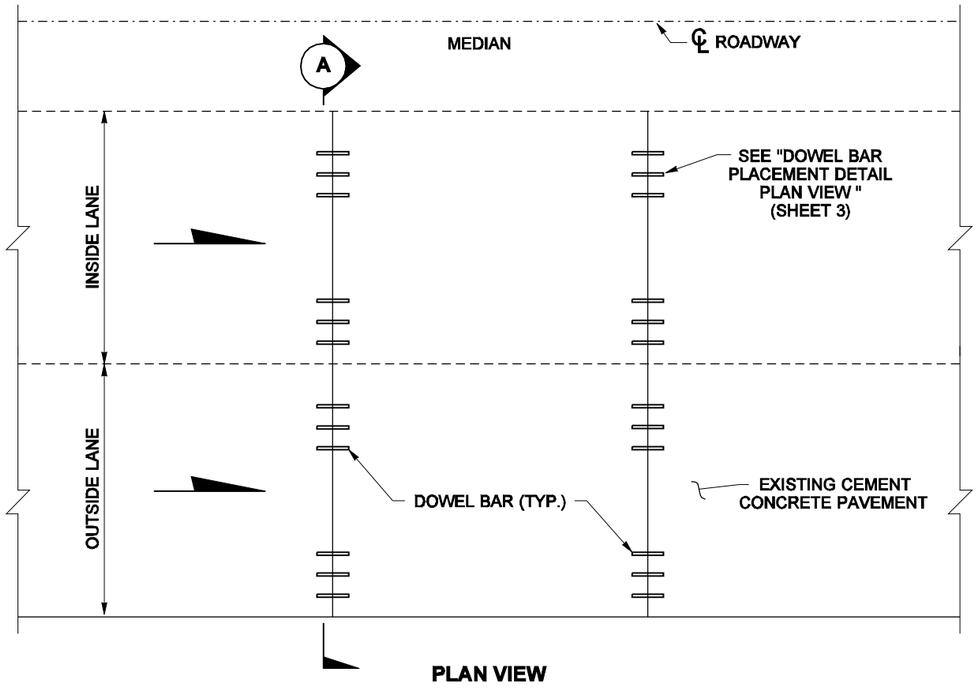

PLAN VIEW

DIVIDED HIGHWAY (ONE WAY TRAFFIC) DOWEL BAR RETROFIT FOR TWO LANES

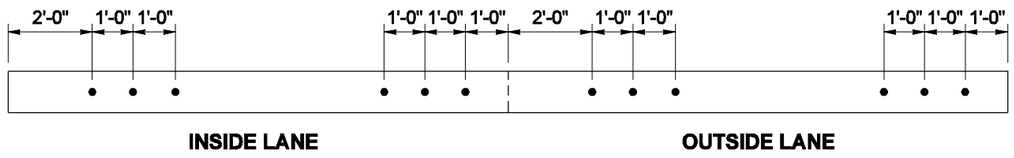

SECTION (A)

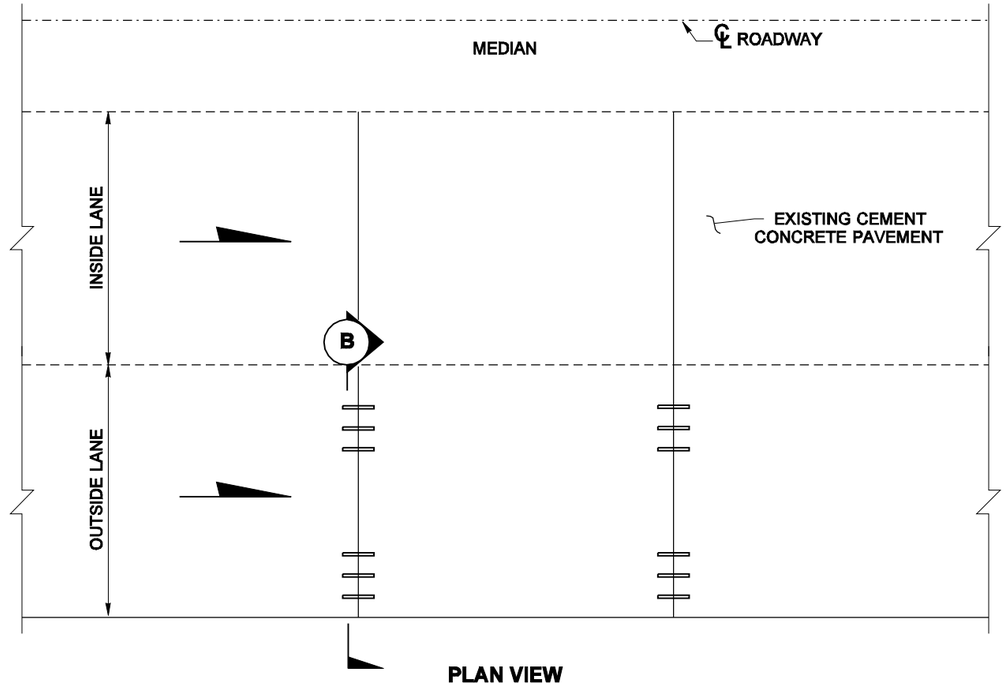

PLAN VIEW

DIVIDED HIGHWAY (ONE WAY TRAFFIC) DOWEL BAR RETROFIT FOR ONE LANE

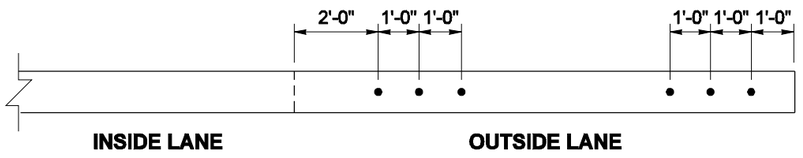

SECTION (B)



EXPIRES JULY 27, 2003

NOTE: THIS PLAN IS NOT A LEGAL ENGINEERING DOCUMENT BUT AN ELECTRONIC DUPLICATE. THE ORIGINAL, SIGNED BY THE ENGINEER AND APPROVED FOR PUBLICATION, IS KEPT ON FILE AT THE WASHINGTON STATE DEPARTMENT OF TRANSPORTATION. A COPY MAY BE OBTAINED UPON REQUEST.

DOWEL BAR RETROFIT FOR CEMENT CONCRETE PAVEMENT

STANDARD PLAN A-5

SHEET 1 OF 3 SHEETS

APPROVED FOR PUBLICATION

Harold J. Peterfeso — STATE DESIGN ENGINEER — *02-24-03* — DATE

Washington State Department of Transportation

EFFECTIVE: APRIL 2, 2007 TO JANUARY 6, 2008

EFFECTIVE: APRIL 2, 2007 TO JANUARY 6, 2008

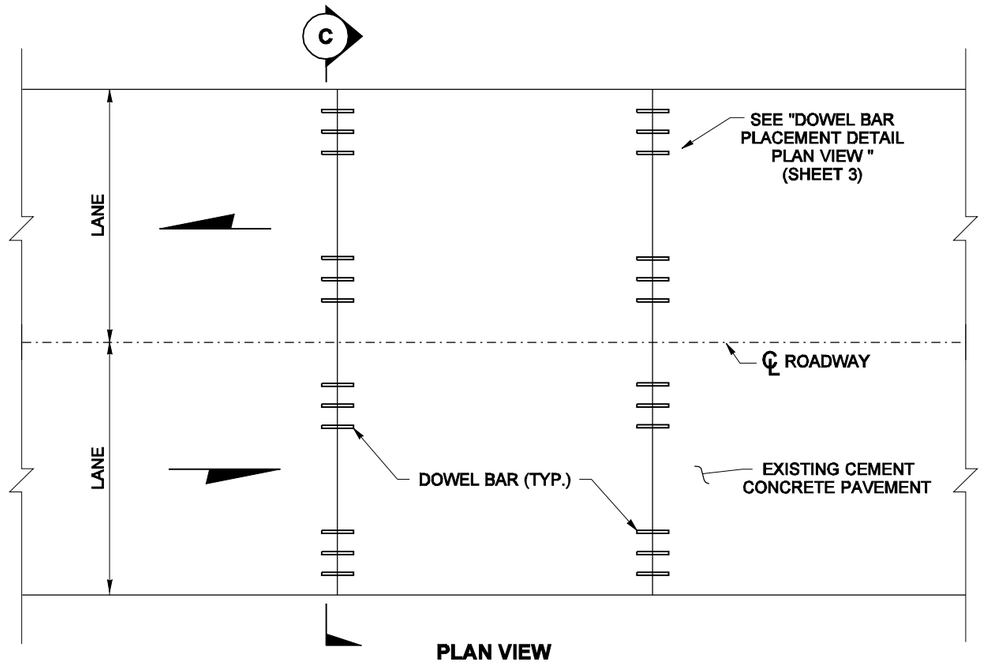

PLAN VIEW

UNDIVIDED HIGHWAY (TWO WAY TRAFFIC) DOWEL BAR RETROFIT FOR EACH LANE

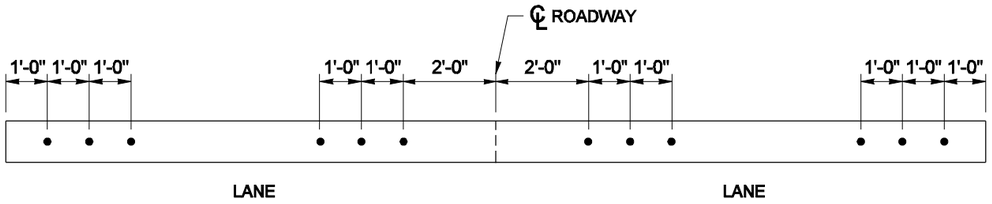

SECTION C

EFFECTIVE: APRIL 2, 2007 TO JANUARY 6, 2008

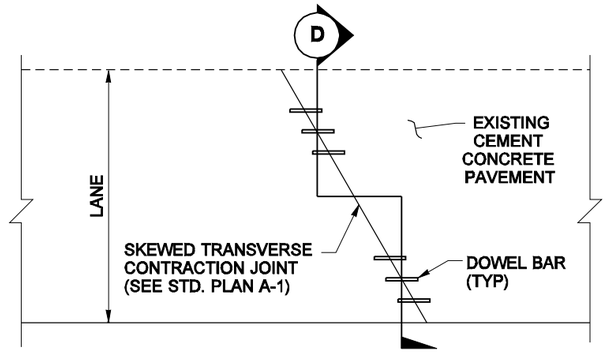

PLAN VIEW

SKEWED JOINT DETAIL



SECTION D



EXPIRES JULY 27, 2003

NOTE: THIS PLAN IS NOT A LEGAL ENGINEERING DOCUMENT BUT AN ELECTRONIC DUPLICATE. THE ORIGINAL, SIGNED BY THE ENGINEER, AND APPROVED FOR PUBLICATION, IS KEPT ON FILE AT THE WASHINGTON STATE DEPARTMENT OF TRANSPORTATION. A COPY MAY BE OBTAINED UPON REQUEST.

DOWEL BAR RETROFIT FOR CEMENT CONCRETE PAVEMENT

STANDARD PLAN A-5

SHEET 2 OF 3 SHEETS

APPROVED FOR PUBLICATION

Harold J. Peterfeso — STATE DESIGN ENGINEER

02-24-03 — DATE

Washington State Department of Transportation

EFFECTIVE: APRIL 2, 2007 TO JANUARY 6, 2008

EFFECTIVE: APRIL 2, 2007 TO JANUARY 6, 2008
EFFECTIVE: APRIL 2, 2007 TO JANUARY 6, 2008

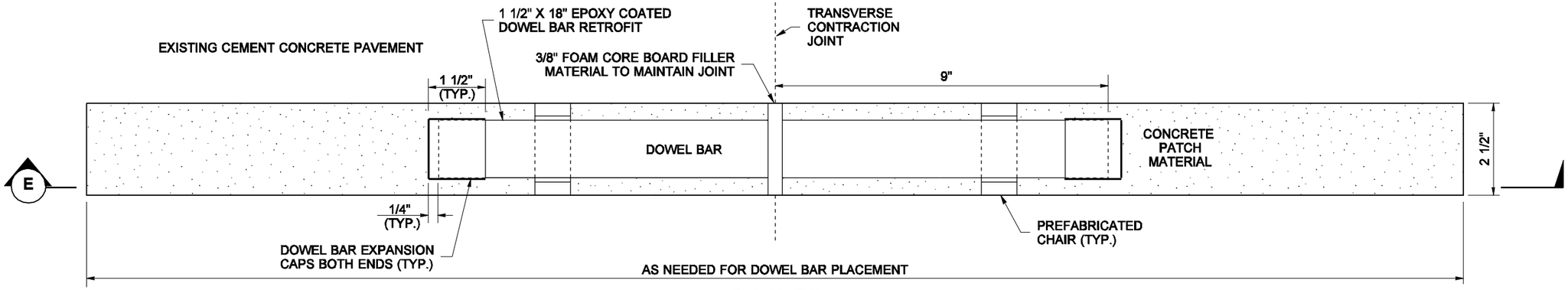

PLAN VIEW

DOWEL BAR PLACEMENT DETAIL

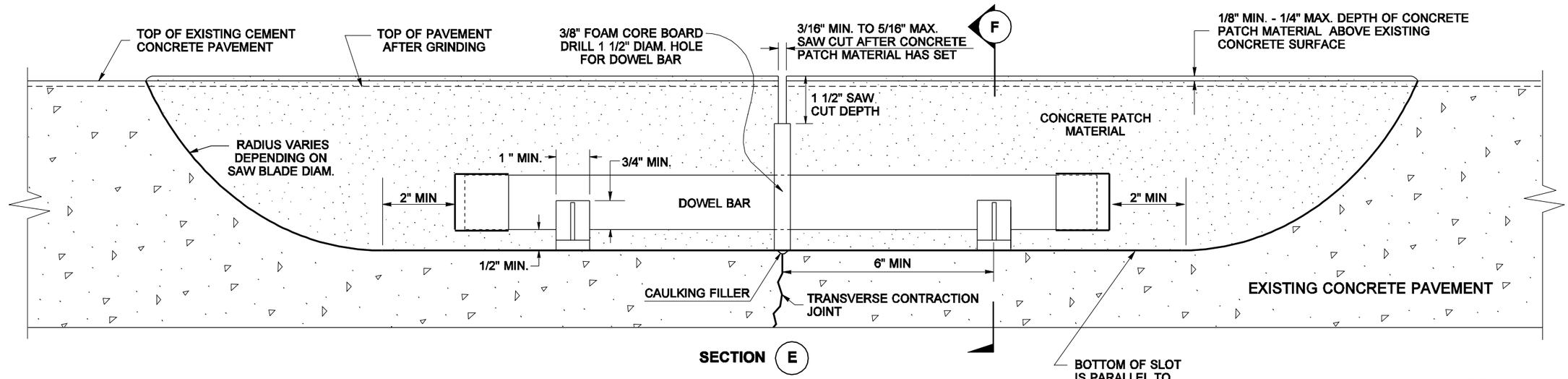

SECTION (E)

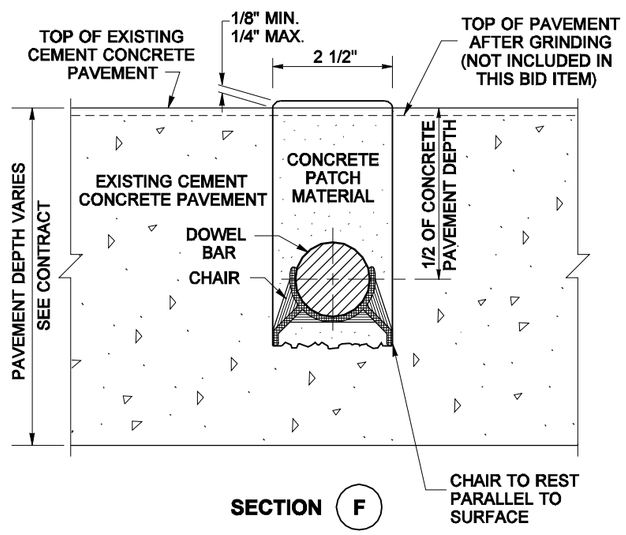

SECTION (F)

KEVIN J. DAYTON
STATE OF WASHINGTON
24035
REGISTERED
PROFESSIONAL ENGINEER

EXPIRES JULY 27, 2003

NOTE: THIS PLAN IS NOT A LEGAL ENGINEERING DOCUMENT BUT AN ELECTRONIC DUPLICATE. THE ORIGINAL, SIGNED BY THE ENGINEER AND APPROVED FOR PUBLICATION, IS KEPT ON FILE AT THE WASHINGTON STATE DEPARTMENT OF TRANSPORTATION. A COPY MAY BE OBTAINED UPON REQUEST.

DOWEL BAR RETROFIT FOR CEMENT CONCRETE PAVEMENT

STANDARD PLAN A-5

SHEET 3 OF 3 SHEETS

APPROVED FOR PUBLICATION

Harold J. Peterfeso — STATE DESIGN ENGINEER — *02-24-03* — DATE

Washington State Department of Transportation

EFFECTIVE: APRIL 2, 2007 TO JANUARY 6, 2008
EFFECTIVE: APRIL 2, 2007 TO JANUARY 6, 2008
EFFECTIVE: APRIL 2, 2007 TO JANUARY 6, 2008
EFFECTIVE: APRIL 2, 2007 TO JANUARY 6, 2008

EFFECTIVE: APRIL 2, 2007 TO JANUARY 6, 2008
EFFECTIVE: APRIL 2, 2007 TO JANUARY 6, 2008

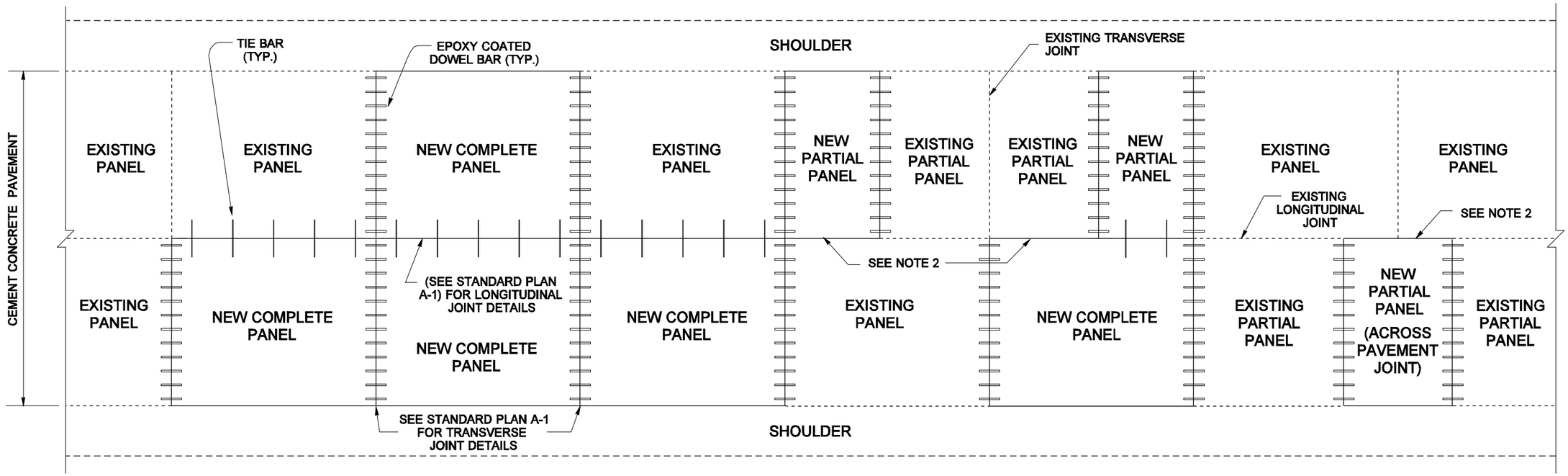

PLAN VIEW

PANEL REPLACEMENT

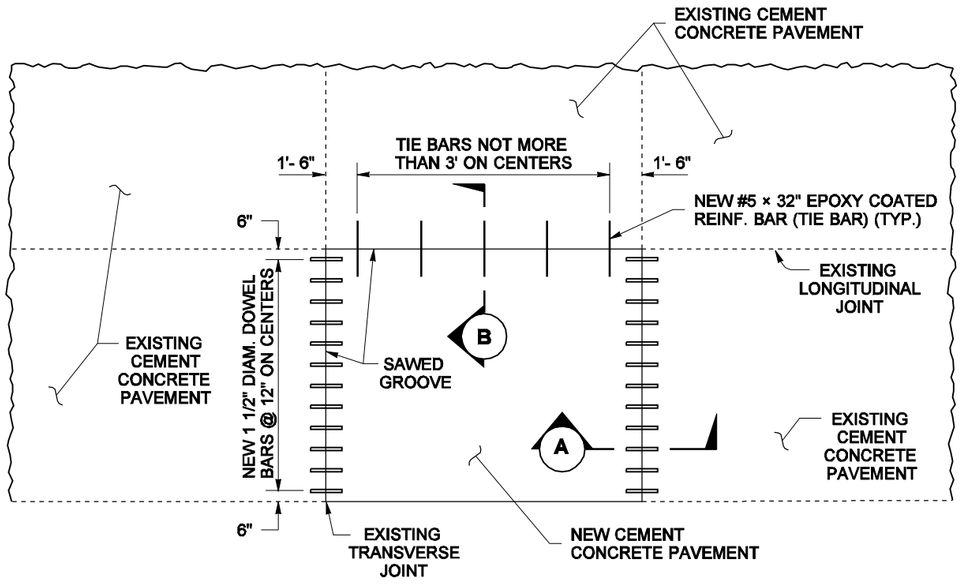

PLAN VIEW

COMPLETE PANEL REPLACEMENT

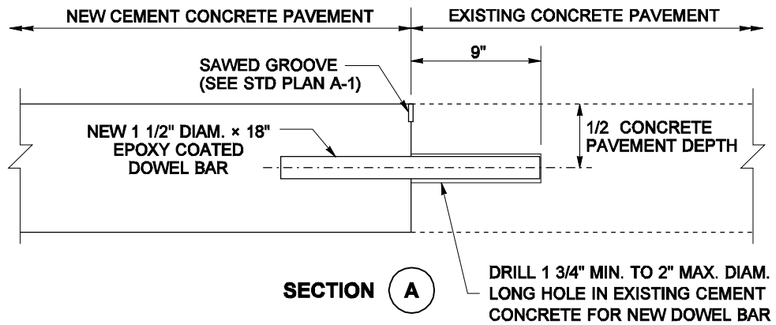

NOTES

1. Install tie bars along longitudinal joint between full panel replacement and existing cement concrete pavement. Tie bars are not installed between cement concrete pavement and asphalt concrete shoulders.

2. Place polyethylene film (per AASHTO M 171-00) along the longitudinal joint between partial panel replacement and existing panel.

KEVIN J. DAYTON
STATE OF WASHINGTON
24035
REGISTERED
PROFESSIONAL ENGINEER

EXPIRES JULY 27, 2003

NOTE: THIS PLAN IS NOT A LEGAL ENGINEERING DOCUMENT BUT AN ELECTRONIC DUPLICATE. THE ORIGINAL, SIGNED BY THE ENGINEER AND APPROVED FOR PUBLICATION, IS KEPT ON FILE AT THE WASHINGTON STATE DEPARTMENT OF TRANSPORTATION. A COPY MAY BE OBTAINED UPON REQUEST.

CEMENT CONCRETE PAVEMENT REPAIR

STANDARD PLAN A-6

SHEET 1 OF 2 SHEETS

APPROVED FOR PUBLICATION

Harold J. Peterfeso — STATE DESIGN ENGINEER

02-24-03 — DATE

Washington State Department of Transportation

EFFECTIVE: APRIL 2, 2007 TO JANUARY 6, 2008
EFFECTIVE: APRIL 2, 2007 TO JANUARY 6, 2008

EFFECTIVE: APRIL 2, 2007 TO JANUARY 6, 2008

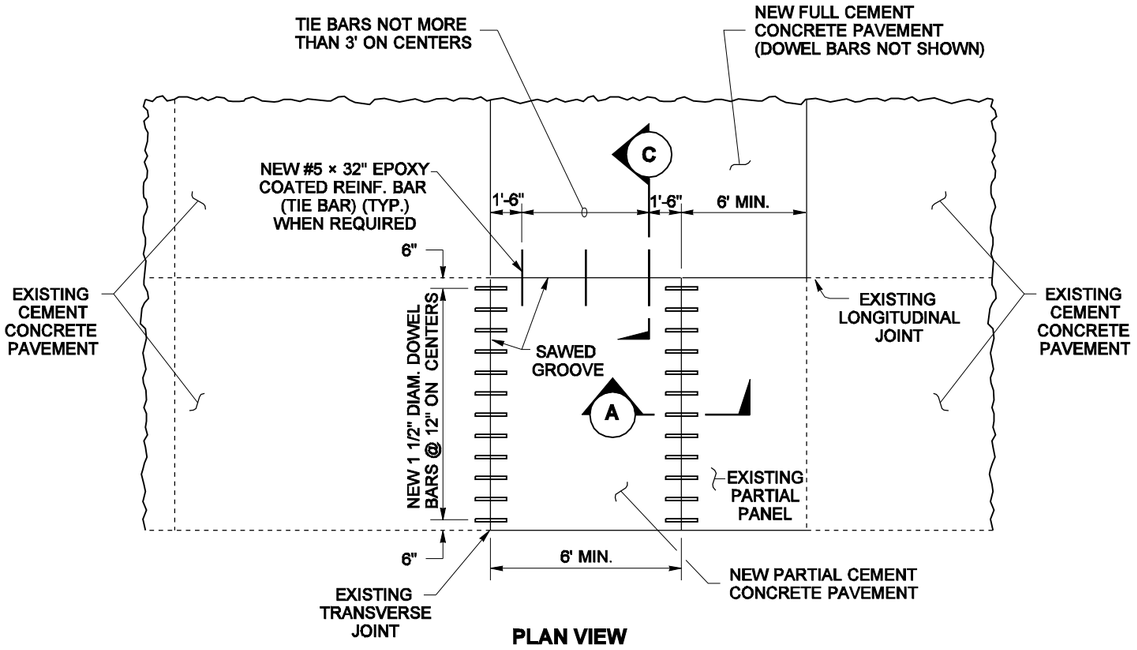

PARTIAL PANEL REPLACEMENT WITH TIE BARS

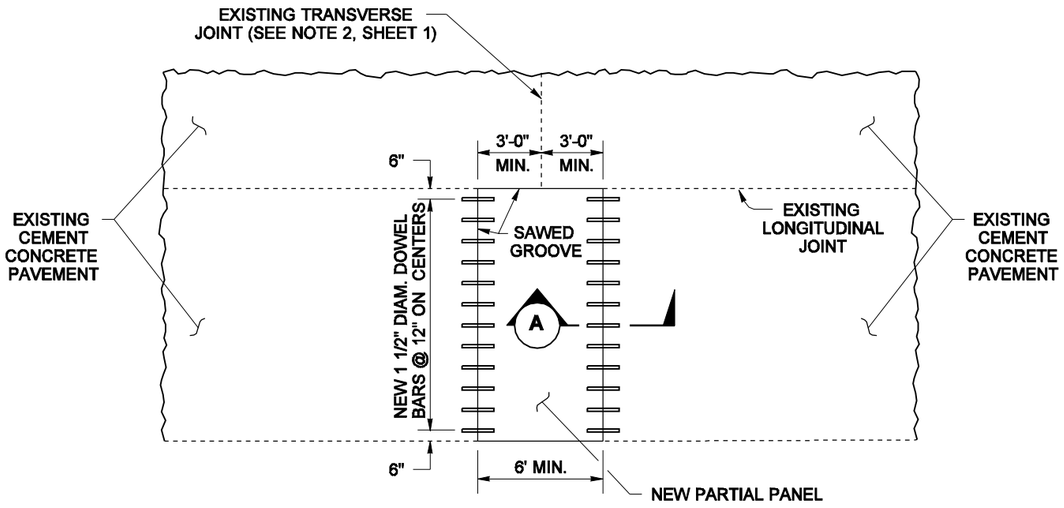

PARTIAL PANEL REPLACEMENT WITHOUT TIE BARS

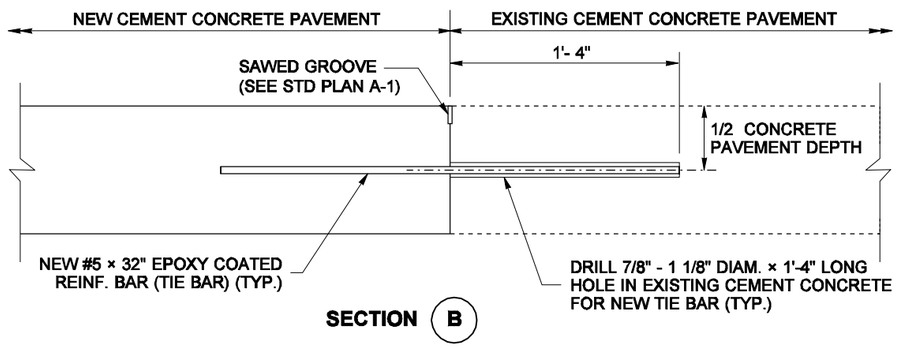

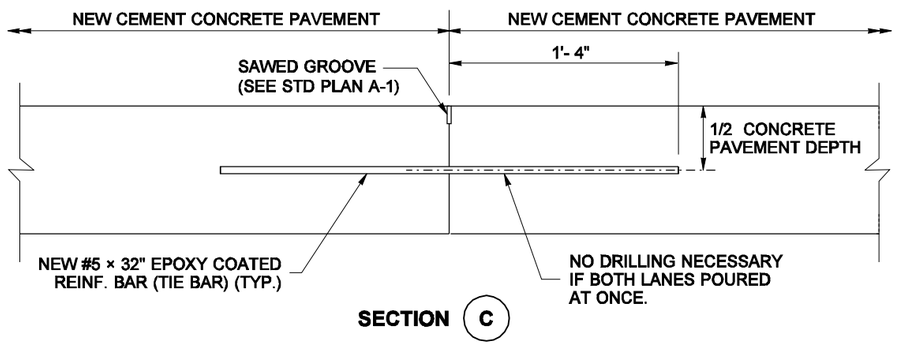

KEVIN J. DAYTON
STATE OF WASHINGTON
24035
REGISTERED
PROFESSIONAL ENGINEER

EXPIRES JULY 27, 2003

NOTE: THIS PLAN IS NOT A LEGAL ENGINEERING DOCUMENT BUT AN ELECTRONIC DUPLICATE. THE ORIGINAL, SIGNED BY THE ENGINEER AND APPROVED FOR PUBLICATION, IS KEPT ON FILE AT THE WASHINGTON STATE DEPARTMENT OF TRANSPORTATION. A COPY MAY BE OBTAINED UPON REQUEST.

CEMENT CONCRETE PAVEMENT REPAIR

STANDARD PLAN A-6

SHEET 2 OF 2 SHEETS

APPROVED FOR PUBLICATION

Harold J. Peterfeso — STATE DESIGN ENGINEER

02-24-03 — DATE

Washington State Department of Transportation

EFFECTIVE: APRIL 2, 2007 TO JANUARY 6, 2008

EFFECTIVE: APRIL 2, 2007 TO JANUARY 6, 2008

DRAWN BY: ELENA BRUNSTEIN

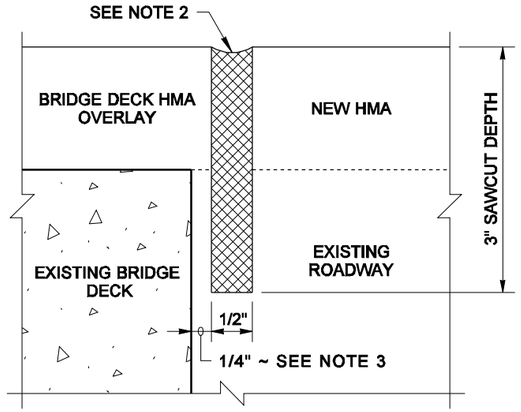

DETAIL 1
1/2" JOINT SEAL
BRIDGE DECK WITH HMA OVERLAY

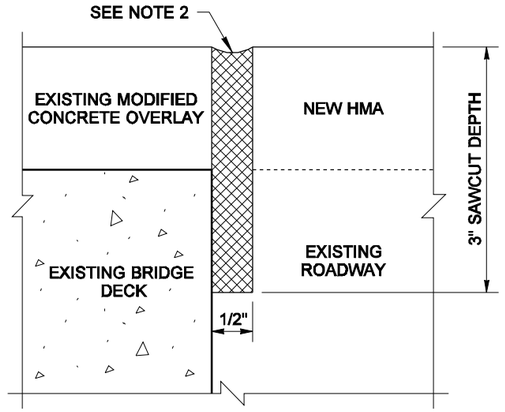

DETAIL 2
1/2" JOINT SEAL
BRIDGE DECK WITH CONCRETE OVERLAY

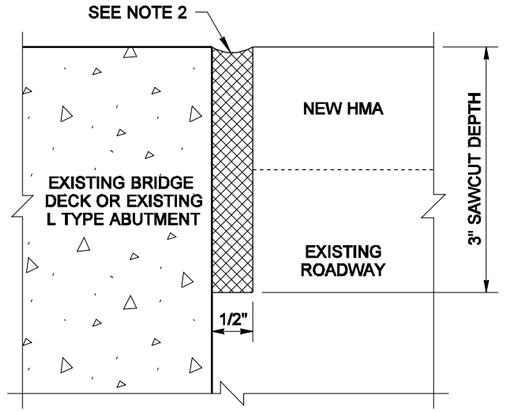

DETAIL 3
1/2" JOINT SEAL
BRIDGE DECK OR L TYPE ABUTMENT

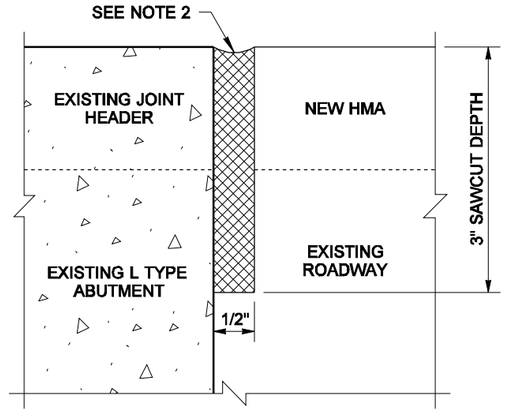

DETAIL 4
1/2" JOINT SEAL
L TYPE ABUTMENT WITH HEADER

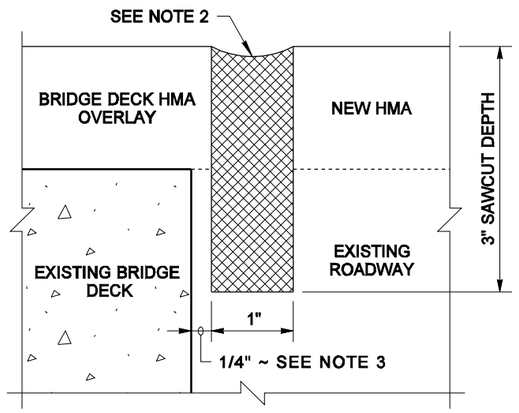

DETAIL 5
1" JOINT SEAL
BRIDGE DECK WITH HMA OVERLAY

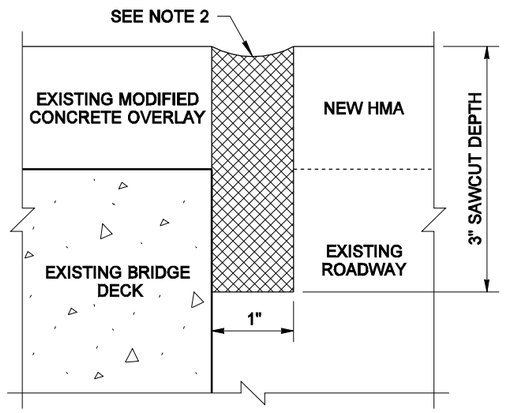

DETAIL 6
1" JOINT SEAL
BRIDGE DECK WITH CONCRETE OVERLAY

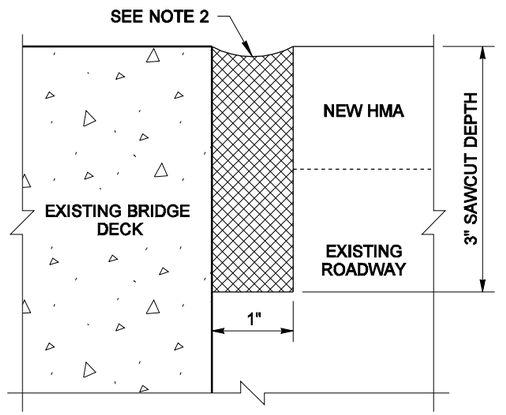

DETAIL 7
1" JOINT SEAL
BRIDGE DECK

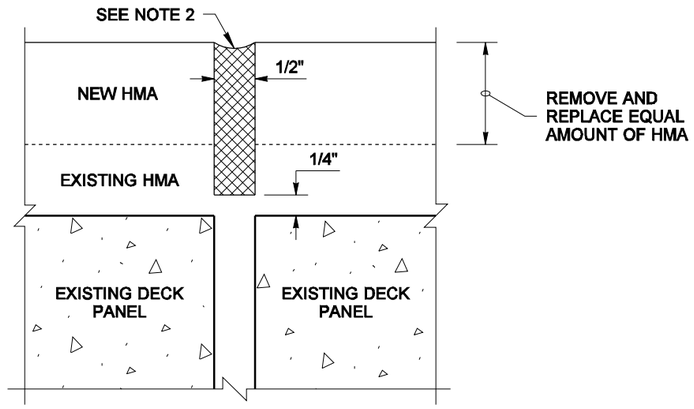

DETAIL 8
1/2" JOINT SEAL
BRIDGE DECK PANELS WITH HMA OVERLAY

NOTES

1. Use the 1/2" joint details for bridges with a length less than 100' and for bridges with L type abutments. Use the 1" joint details for other applications. Use DETAIL 8 on steel trusses and timber bridges with concrete deck panels.

2. Sawcut shall be filled with hot-poured compound in accordance with Standard Specification 9-04.2(1) and sealed in accordance with Standard Specification 5-05.3(8)B.

3. The contractor shall avoid sawing existing concrete. The construction tolerance to locate the saw cut is ± 1/4" (0 min. to 1/2" max.) from the existing concrete (DETAILs 1 and 5).

JUGESH KAPUR
STATE OF WASHINGTON
25400
REGISTERED
PROFESSIONAL ENGINEER

EXPIRES MAY 19, 2006

NOTE: THIS PLAN IS NOT A LEGAL ENGINEERING DOCUMENT BUT AN ELECTRONIC DUPLICATE. THE ORIGINAL, SIGNED BY THE ENGINEER AND APPROVED FOR PUBLICATION, IS KEPT ON FILE AT THE WASHINGTON STATE DEPARTMENT OF TRANSPORTATION. A COPY MAY BE OBTAINED UPON REQUEST.

BRIDGE TRANSVERSE JOINT SEAL

STANDARD PLAN A-7

SHEET 1 OF 1 SHEET

APPROVED FOR PUBLICATION

Harold J. Peterfeso — STATE DESIGN ENGINEER

10-04-05 — DATE

Washington State Department of Transportation

EFFECTIVE: APRIL 2, 2007 TO JANUARY 6, 2008

EFFECTIVE: APRIL 2, 2007 TO JANUARY 6, 2008

DRAWN BY: MARK SUJKA

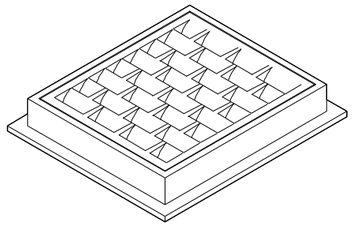

FRAME AND VANED GRATE

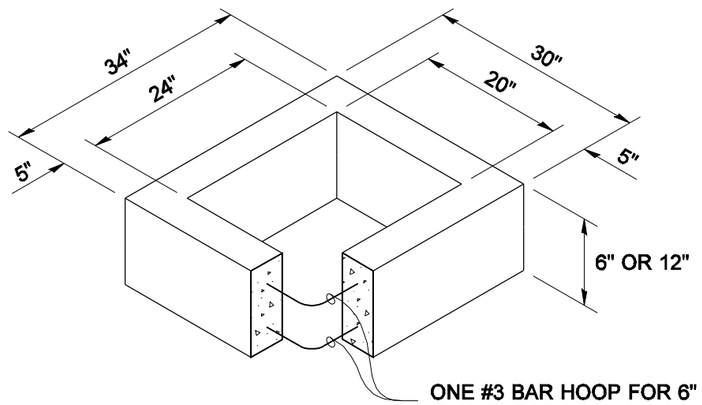

RECTANGULAR ADJUSTMENT SECTION

PIPE ALLOWANCES	
PIPE MATERIAL	**MAXIMUM INSIDE DIAMETER**
REINFORCED OR PLAIN CONCRETE	12"
ALL METAL PIPE	15"
CPSSP * (STD. SPEC. 9-05.20)	12"
SOLID WALL PVC (STD. SPEC. 9-05.12(1))	15"
PROFILE WALL PVC (STD. SPEC. 9-05.12(2))	15"

* CORRUGATED POLYETHYLENE STORM SEWER PIPE

NOTES

1. As acceptable alternatives to the rebar shown in the **PRECAST BASE SECTION**, fibers (placed according to the Standard Specifications), or wire mesh having a minimum area of 0.12 square inches per foot shall be used with the minimum required rebar shown in the **ALTERNATIVE PRECAST BASE SECTION**. Wire mesh shall not be placed in the knockouts.
2. The knockout diameter shall not be greater than 20". Knockouts shall have a wall thickness of 2" minimum to 2.5" maximum. Provide a 1.5" minimum gap between the knockout wall and the outside of the pipe. After the pipe is installed, fill the gap with joint mortar in accordance with Standard Specification 9-04.3.
3. The maximum depth from the finished grade to the lowest pipe invert shall be 5'.
4. The frame and grate may be installed with the flange up or down. The frame may be cast into the adjustment section.
5. The Precast Base Section may have a rounded floor, and the walls may be sloped at a rate of 1:24 or steeper.
6. The opening shall be measured at the top of the precast base section.
7. All pickup holes shall be grouted full after the basin has been placed.

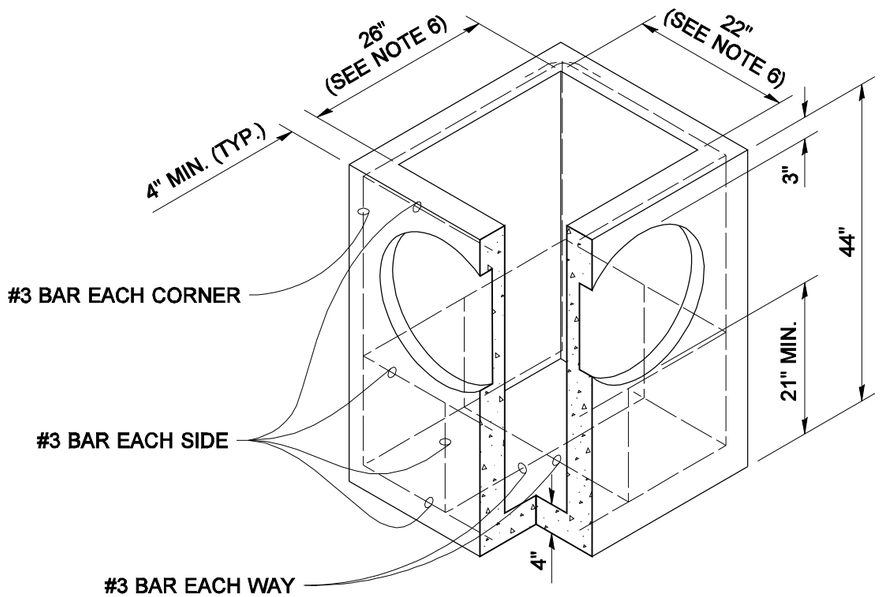

PRECAST BASE SECTION

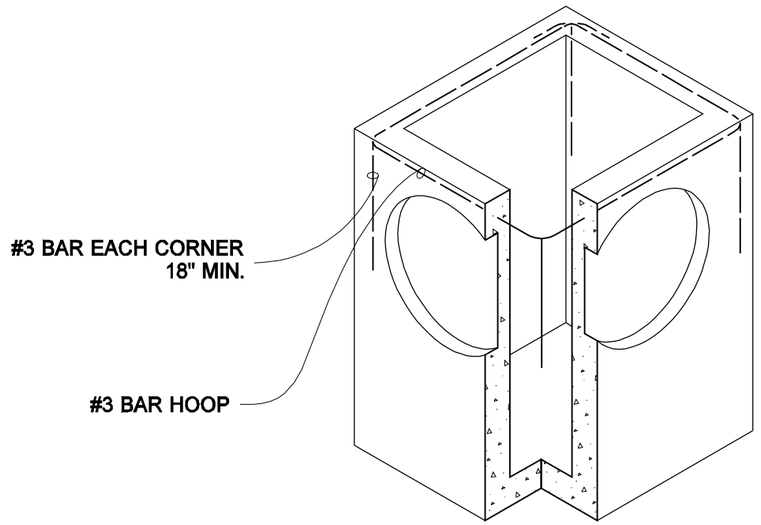

SEE NOTE 1

ALTERNATIVE PRECAST BASE SECTION

MATTHEW J. WITECKI
STATE OF WASHINGTON
15588
REGISTERED
PROFESSIONAL ENGINEER

EXPIRES JULY 1, 2007

NOTE: THIS PLAN IS NOT A LEGAL ENGINEERING DOCUMENT BUT AN ELECTRONIC DUPLICATE. THE ORIGINAL, SIGNED BY THE ENGINEER AND APPROVED FOR PUBLICATION, IS KEPT ON FILE AT THE WASHINGTON STATE DEPARTMENT OF TRANSPORTATION. A COPY MAY BE OBTAINED UPON REQUEST.

CATCH BASIN TYPE 1

STANDARD PLAN B-5.20-00

SHEET 1 OF 1 SHEET

APPROVED FOR PUBLICATION

Harold J. Peterfeso — STATE DESIGN ENGINEER — *06-01-06* — DATE

Washington State Department of Transportation

EFFECTIVE: APRIL 2, 2007 TO JANUARY 6, 2008

EFFECTIVE: APRIL 2, 2007 TO JANUARY 6, 2008

EFFECTIVE: APRIL 2, 2007 TO JANUARY 6, 2008

DRAWN BY: MARK SUJKA

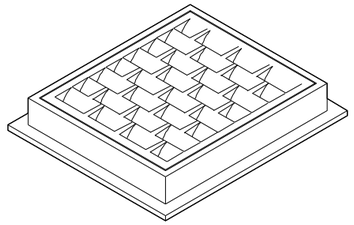

FRAME AND VANED GRATE

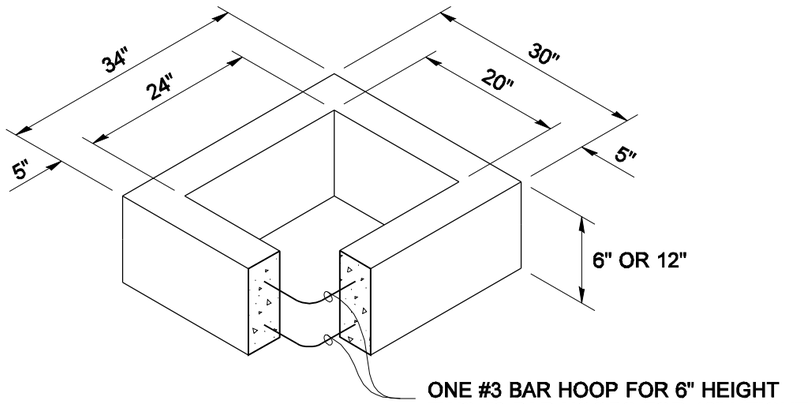

PIPE ALLOWANCES	
PIPE MATERIAL	**MAXIMUM INSIDE DIAMETER**
REINFORCED OR PLAIN CONCRETE	18"
ALL METAL PIPE	21"
CPSSP * (STD. SPEC. 9-05.20)	18"
SOLID WALL PVC (STD. SPEC. 9-05.12(1))	21"
PROFILE WALL PVC (STD. SPEC. 9-05.12(2))	21"

* CORRUGATED POLYETHYLENE STORM SEWER PIPE

NOTES

1. As acceptable alternatives to the rebar shown in the **PRECAST BASE SECTION**, fibers (placed according to the Standard Specifications), or wire mesh having a minimum area of 0.12 square inches per foot shall be used with the minimum required rebar shown in the **ALTERNATIVE PRECAST BASE SECTION**. Wire mesh shall not be placed in the knockouts.
2. The knockout diameter shall not be greater than 26". Knockouts shall have a wall thickness of 2" minimum to 2.5" maximum. Provide a 1.5" minimum gap between the knockout wall and the outside of the pipe. After the pipe is installed, fill the gap with joint mortar in accordance with Standard Specification 9-04.3.
3. The maximum depth from the finished grade to the lowest pipe invert shall be 5'.
4. The frame and grate may be installed with the flange up or down. The frame may be cast into the adjustment section.
5. The Precast Base Section may have a rounded floor, and the walls may be sloped at a rate of 1:24 or steeper.
6. The opening shall be measured at the top of the precast base section.
7. All pickup holes shall be grouted full after the basin has been placed.

RECTANGULAR ADJUSTMENT SECTION

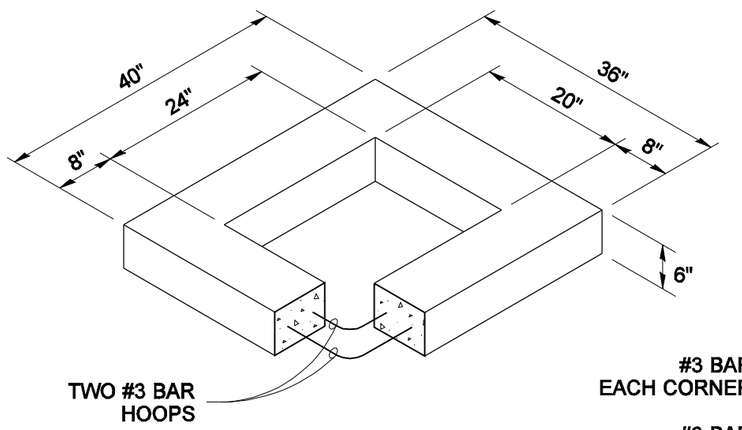

REDUCING SECTION

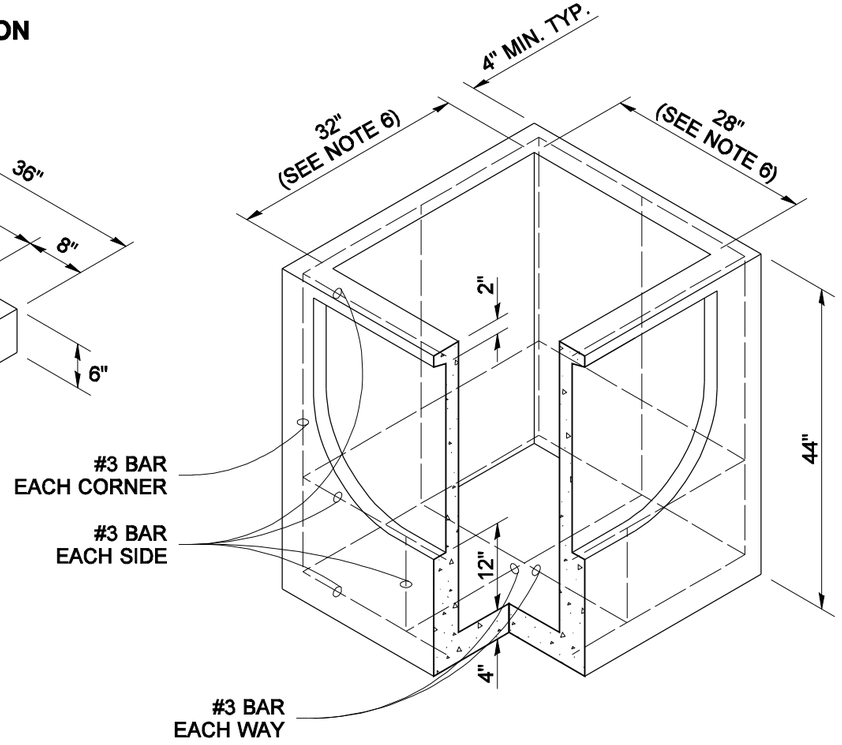

PRECAST BASE SECTION

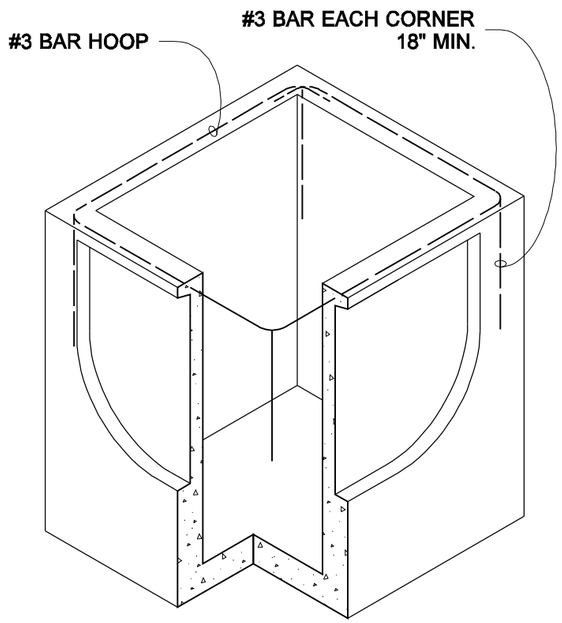

SEE NOTE 1

ALTERNATIVE PRECAST BASE SECTION



EXPIRES JULY 1, 2007

NOTE: THIS PLAN IS NOT A LEGAL ENGINEERING DOCUMENT BUT AN ELECTRONIC DUPLICATE. THE ORIGINAL, SIGNED BY THE ENGINEER AND APPROVED FOR PUBLICATION, IS KEPT ON FILE AT THE WASHINGTON STATE DEPARTMENT OF TRANSPORTATION. A COPY MAY BE OBTAINED UPON REQUEST.

CATCH BASIN TYPE 1L

STANDARD PLAN B-5.40-00

SHEET 1 OF 1 SHEET

APPROVED FOR PUBLICATION

Harold J. Peterfeso — STATE DESIGN ENGINEER — *06-01-06* — DATE

Washington State Department of Transportation

EFFECTIVE: APRIL 2, 2007 TO JANUARY 6, 2008

EFFECTIVE: APRIL 2, 2007 TO JANUARY 6, 2008

EFFECTIVE: APRIL 2, 2007 TO JANUARY 6, 2008

DRAWN BY: MARK SUJKA

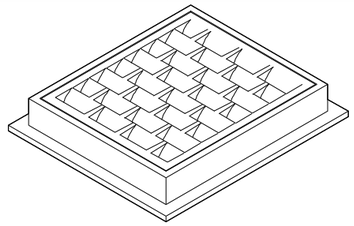

FRAME AND VANED GRATE

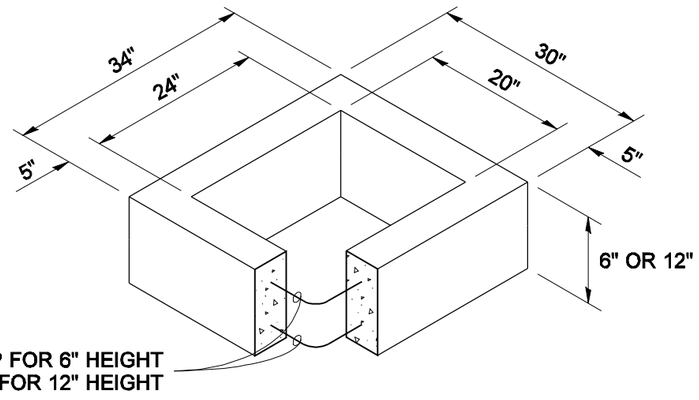

RECTANGULAR ADJUSTMENT SECTION

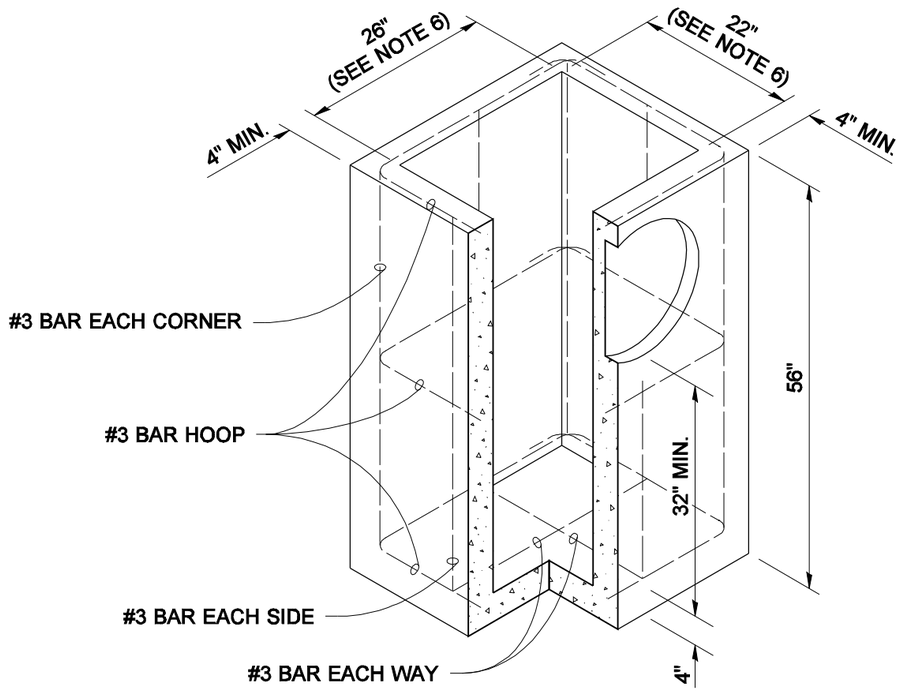

PRECAST BASE SECTION

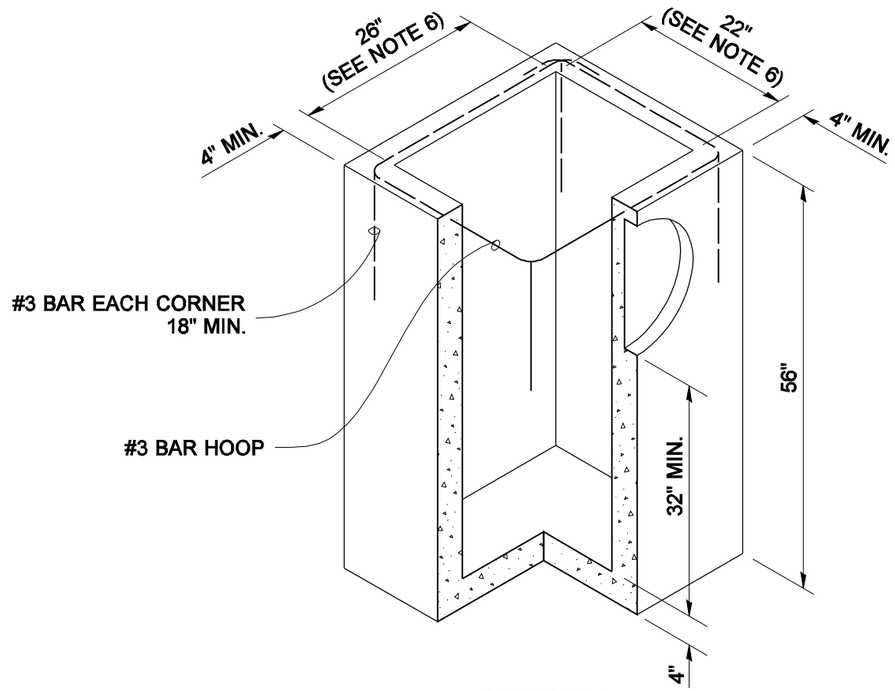

SEE NOTE 1

ALTERNATIVE PRECAST BASE SECTION

NOTES

1. As acceptable alternatives to the rebar shown in the **PRECAST BASE SECTION**, fibers (placed according to the Standard Specifications), or wire mesh having a minimum area of 0.12 square inches per foot shall be used with the minimum required rebar shown in the **ALTERNATIVE PRECAST BASE SECTION**. Wire mesh shall not be placed in the knockouts.

2. The knockout diameter shall not be greater than 18". Knockouts shall have a wall thickness of 2" minimum to 2.5" maximum. Provide a 1.5" minimum gap between the knockout wall and the outside of the pipe. After the pipe is installed, fill the gap with joint mortar in accordance with Standard Specification 9-04.3.

3. The maximum depth from the finished grade to the lowest pipe invert shall be 5'.

4. The frame and grate may be installed with the flange up or down. The frame may be cast into the adjustment section.

5. The Precast Base Section may have a rounded floor, and the walls may be sloped at a rate of 1:24 or steeper.

6. The opening shall be measured at the top of the precast base section.

7. All pickup holes shall be grouted full after the basin has been placed.



EXPIRES JULY 1, 2007

NOTE: THIS PLAN IS NOT A LEGAL ENGINEERING DOCUMENT BUT AN ELECTRONIC DUPLICATE. THE ORIGINAL, SIGNED BY THE ENGINEER AND APPROVED FOR PUBLICATION, IS KEPT ON FILE AT THE WASHINGTON STATE DEPARTMENT OF TRANSPORTATION. A COPY MAY BE OBTAINED UPON REQUEST.

CATCH BASIN TYPE 1P (FOR PARKING LOT)

STANDARD PLAN B-5.60-00

SHEET 1 OF 1 SHEET

APPROVED FOR PUBLICATION

Harold J. Peterfeso — STATE DESIGN ENGINEER — *06-01-06* — DATE

Washington State Department of Transportation

EFFECTIVE: APRIL 2, 2007 TO JANUARY 6, 2008

EFFECTIVE: APRIL 2, 2007 TO JANUARY 6, 2008

DRAWN BY: ADAM COCHRAN

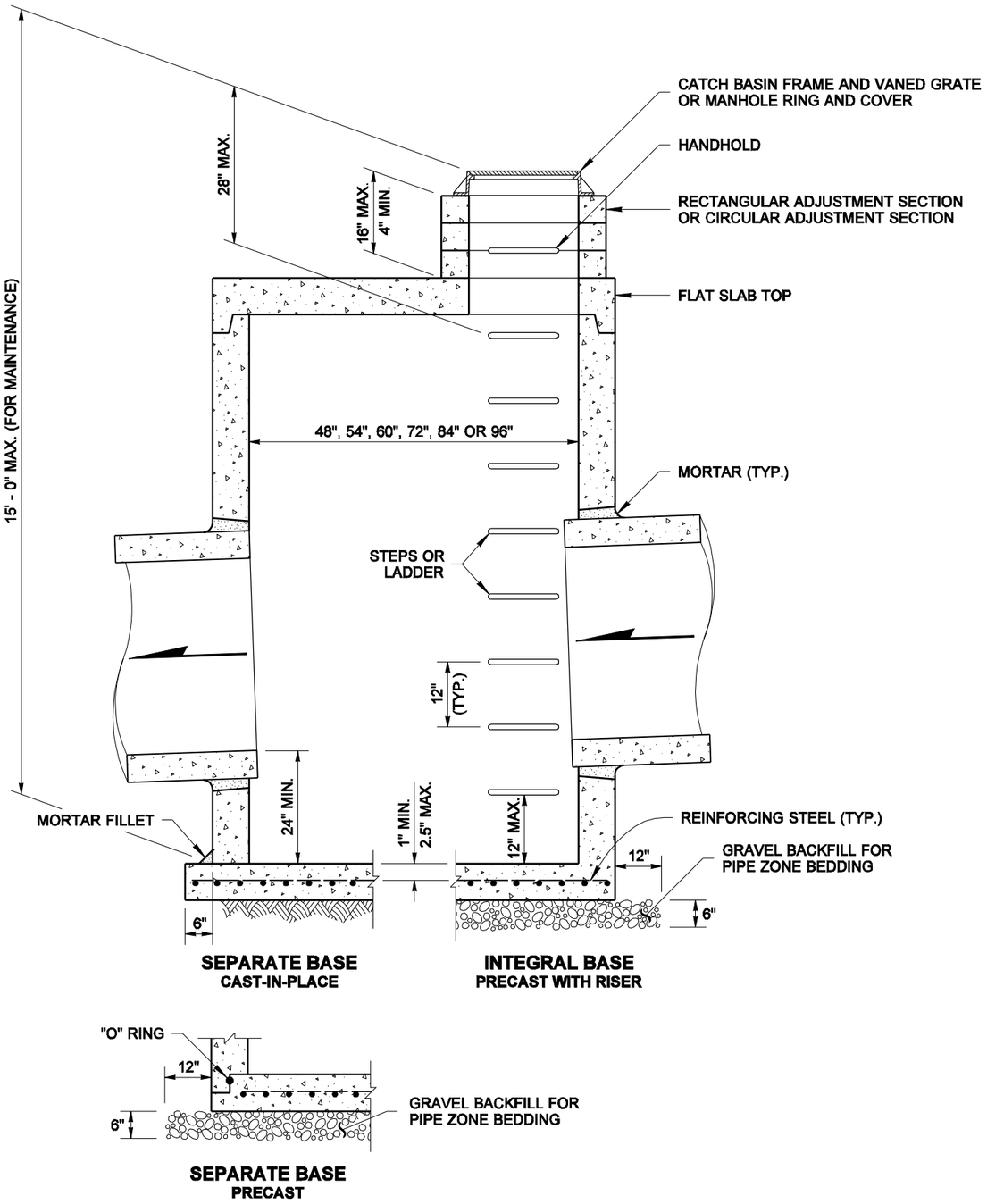

EFFECTIVE: APRIL 2, 2007 TO JANUARY 6, 2008

NOTES

1. No steps are required when height is 4' or less.
2. The bottom of the precast catch basin may be sloped to facilitate cleaning.
3. The rectangular frame and grate may be installed with the flange up or down. The frame may be cast into the adjustment section.
4. Knockouts shall have a wall thickness of 2" minimum to 2.5" maximum. Provide a 1.5" minimum gap between the knockout wall and the outside of the pipe. After the pipe is installed, fill the gap with joint mortar in accordance with Standard Specification 9-04.3.

CATCH BASIN DIMENSIONS

CATCH BASIN DIAMETER	WALL THICKNESS	BASE THICKNESS	MAXIMUM KNOCKOUT SIZE	MINIMUM DISTANCE BETWEEN KNOCKOUTS	BASE REINFORCING STEEL in^2/ft. IN EACH DIRECTION	
					SEPARATE BASE	INTEGRAL BASE
48"	4"	6"	36"	8"	0.23	0.15
54"	4.5"	8"	42"	8"	0.19	0.19
60"	5"	8"	48"	8"	0.25	0.25
72"	6"	8"	60"	12"	0.35	0.24
84"	8"	12"	72"	12"	0.39	0.29
96"	8"	12"	84"	12"	0.39	0.29

PIPE ALLOWANCES

CATCH BASIN DIAMETER	PIPE MATERIAL WITH MAXIMUM INSIDE DIAMETER				
	CONCRETE	ALL METAL	CPSSP ①	SOLID WALL PVC ②	PROFILE WALL PVC ③
48"	24"	30"	24"	27"	30"
54"	30"	36"	30"	27"	36"
60"	36"	42"	36"	36"	42"
72"	42"	54"	42"	36"	48"
84"	54"	60"	54"	36"	48"
96"	60"	72"	60"	36"	48"

① Corrugated Polyethylene Storm Sewer Pipe (Std. Spec. 9-05.20)
② (Std. Spec. 9-05.12(1))
③ (Std. Spec. 9-05.12(2))

MATTHEW J. WITECKI
STATE OF WASHINGTON
15588
REGISTERED
PROFESSIONAL ENGINEER
EXPIRES JULY 1, 2007

NOTE: THIS PLAN IS NOT A LEGAL ENGINEERING DOCUMENT BUT AN ELECTRONIC DUPLICATE. THE ORIGINAL, SIGNED BY THE ENGINEER AND APPROVED FOR PUBLICATION, IS KEPT ON FILE AT THE WASHINGTON STATE DEPARTMENT OF TRANSPORTATION. A COPY MAY BE OBTAINED UPON REQUEST.

CATCH BASIN TYPE 2

STANDARD PLAN B-10.20-00

SHEET 1 OF 1 SHEET

APPROVED FOR PUBLICATION

Harold J. Peterfeso — STATE DESIGN ENGINEER — *06-01-06* — DATE

Washington State Department of Transportation

EFFECTIVE: APRIL 2, 2007 TO JANUARY 6, 2008

EFFECTIVE: APRIL 2, 2007 TO JANUARY 6, 2008

DRAWN BY: MARK SUJKA

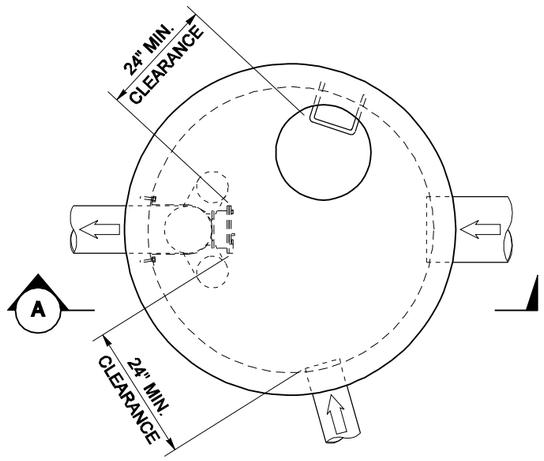

PLAN VIEW

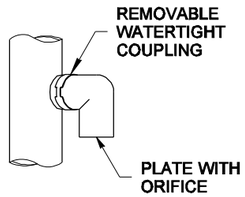

ELBOW DETAIL

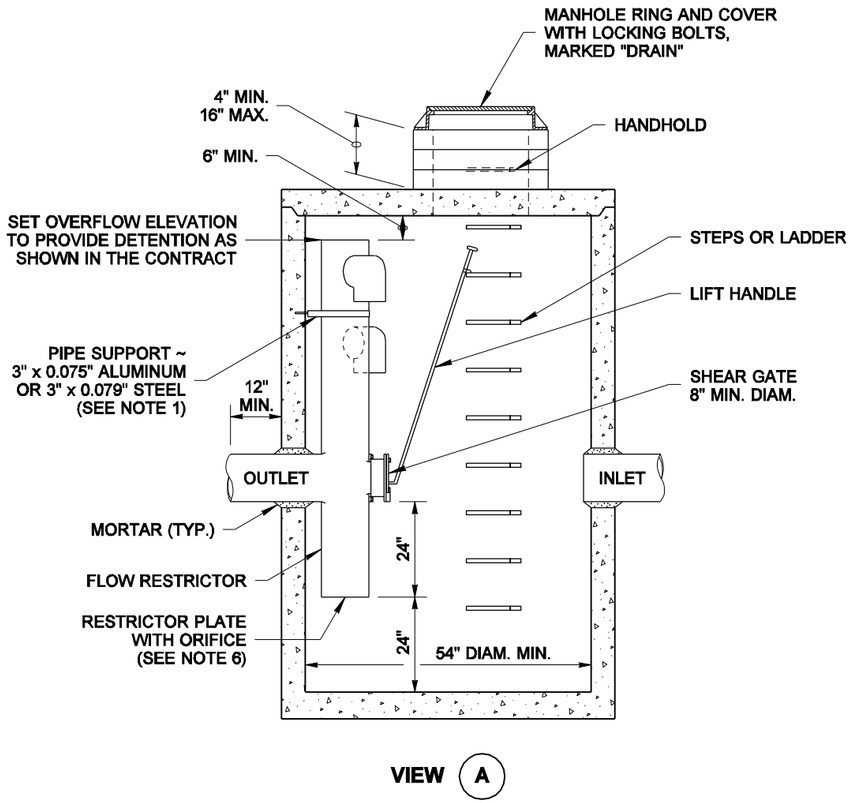

VIEW (A)

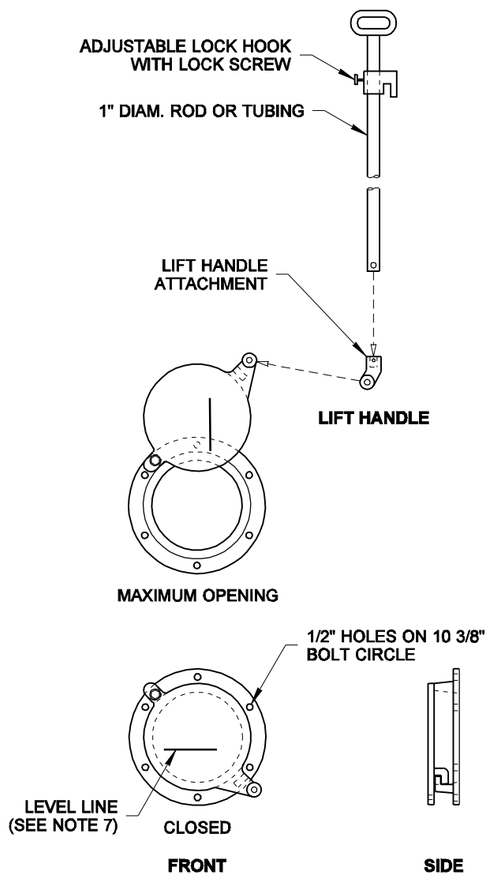

SHEAR GATE DETAILS

EFFECTIVE: APRIL 2, 2007 TO JANUARY 6, 2008

EFFECTIVE: APRIL 2, 2007 TO JANUARY 6, 2008

NOTES

1. The pipe supports and the flow restrictor shall be constructed of the same material and be anchored at a maximum spacing of 36". Attach the pipe supports to the manhole with 5/8" stainless steel expansion bolts or embed the supports into the manhole wall 2".

2. The vertical riser stem of the flow restrictor shall be the same diameter as the horizontal outlet pipe with a minimum diameter of 8".

3. The flow restrictor shall be fabricated from one of the following materials:

   0.060" Corrugated Aluminum Alloy Drain Pipe
   0.064" Corrugated Galvanized Steel Drain Pipe with Treatment 1
   0.064" Corrugated Aluminized Steel Drain Pipe
   0.060" Aluminum alloy flat sheet, in accordance with ASTM B 209, 5052 H32 or EPS
   High Density Polyethylene Storm Sewer Pipe

4. The frame and ladder or steps are to be offset so that: the shear gate is visible from the top; the climb-down space is clear of the riser and gate; the frame is clear of the curb.

5. The multi-orifice elbows may be located as shown, or all placed on one side of the riser to assure ladder clearance. The size of the elbows and their placement shall be specified in the Contract.

6. Restrictor plate with orifice as specified in the Contract. The opening is to be cut round and smooth.

7. The shear gate shall be made of aluminum alloy in accordance with ASTM B 26 and ASTM B 275, designation ZG32A; or cast iron in accordance with ASTM A 48, Class 30B.

   The lift handle shall be made of a similar metal to the gate (to prevent galvanic corrosion), it may be of solid rod or hollow tubing, with adjustable hook as required.

   A neoprene rubber gasket is required between the riser mounting flange and the gate flange.

   Install the gate so that the level-line mark is level when the gate is closed.

   The mating surfaces of the lid and the body shall be machined for proper fit.

   All shear gate bolts shall be stainless steel.

8. The shear gate maximum opening shall be controlled by limited hinge movement, a stop tab, or some other device.

9. Alternative shear gate designs are acceptable if material specifications are met and flange bolt pattern matches.

MATTHEW J. WITECKI
STATE OF WASHINGTON
15588
REGISTERED
PROFESSIONAL ENGINEER

EXPIRES JULY 1, 2007

NOTE: THIS PLAN IS NOT A LEGAL ENGINEERING DOCUMENT BUT AN ELECTRONIC DUPLICATE. THE ORIGINAL, SIGNED BY THE ENGINEER AND APPROVED FOR PUBLICATION, IS KEPT ON FILE AT THE WASHINGTON STATE DEPARTMENT OF TRANSPORTATION. A COPY MAY BE OBTAINED UPON REQUEST.

CATCH BASIN TYPE 2 WITH FLOW RESTRICTOR

STANDARD PLAN B-10.40-00

SHEET 1 OF 1 SHEET

APPROVED FOR PUBLICATION

Harold J. Peterfeso — STATE DESIGN ENGINEER — *06-01-06* — DATE

Washington State Department of Transportation

EFFECTIVE: APRIL 2, 2007 TO JANUARY 6, 2008

EFFECTIVE: APRIL 2, 2007 TO JANUARY 6, 2008

EFFECTIVE: APRIL 2, 2007 TO JANUARY 6, 2008

DRAWN BY: ADAM COCHRAN

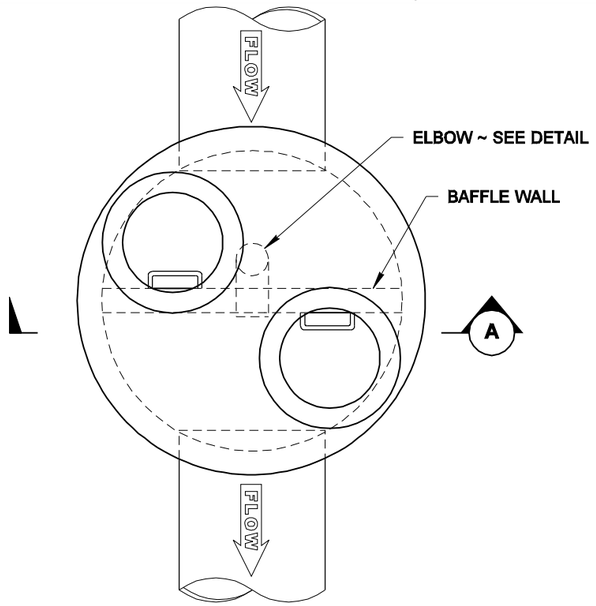

PLAN

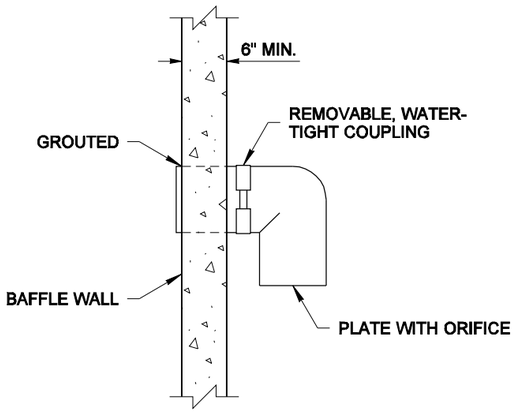

ELBOW DETAIL

NOTES

1. See Contract for size and location of all pipes and orifices.
2. Baffle wall shall have #4 Bar at 12" spacing each way.
3. Precast baffle shall be keyed and grouted in place.
4. Bottom orifice plate shall be galvanized steel with a minimum thickness of 1/4". Attach orifice with 1/2" stainless steel bolts.
5. Upper flow orifice plates and elbows shall be aluminum, aluminized steel or galvanized steel. Galvanized steel shall have Treatment 1.

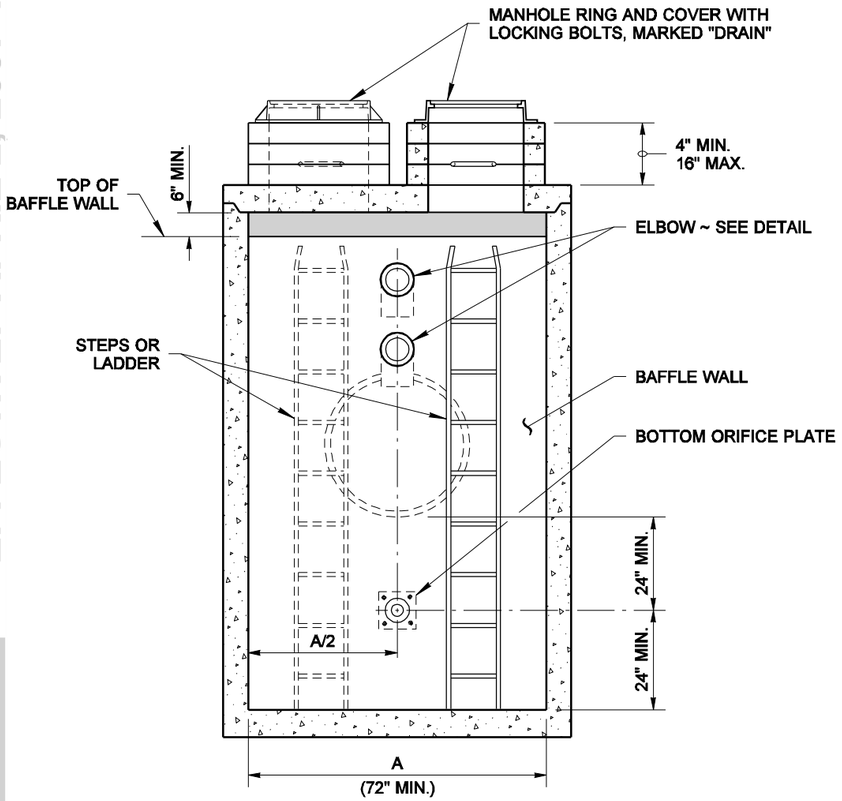

SECTION (A)

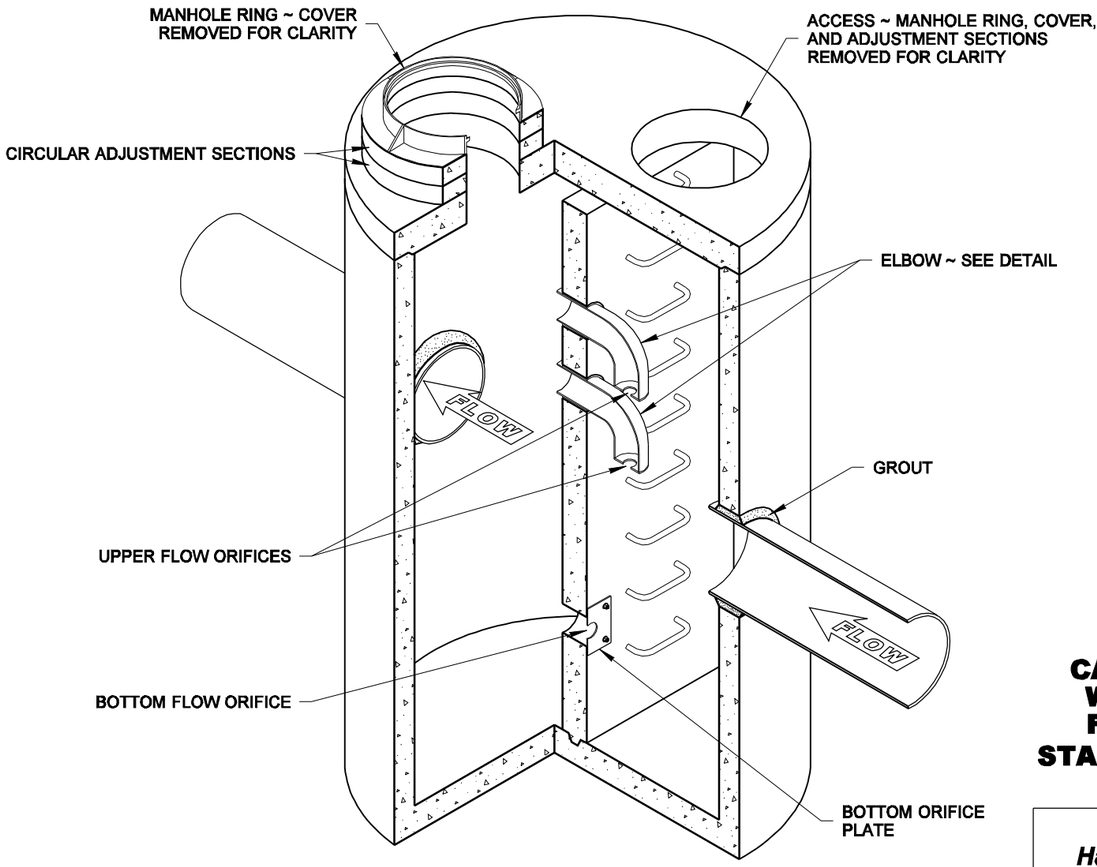

ISOMETRIC CUTAWAY

MATTHEW J. WITECKI
STATE OF WASHINGTON
15588
REGISTERED
PROFESSIONAL ENGINEER

EXPIRES JULY 1, 2007

NOTE: THIS PLAN IS NOT A LEGAL ENGINEERING DOCUMENT BUT AN ELECTRONIC DUPLICATE. THE ORIGINAL, SIGNED BY THE ENGINEER AND APPROVED FOR PUBLICATION, IS KEPT ON FILE AT THE WASHINGTON STATE DEPARTMENT OF TRANSPORTATION. A COPY MAY BE OBTAINED UPON REQUEST.

CATCH BASIN TYPE 2 WITH BAFFLE TYPE FLOW RESTRICTOR STANDARD PLAN B-10.60-00

SHEET 1 OF 1 SHEET

APPROVED FOR PUBLICATION

Harold J. Peterfeso — STATE DESIGN ENGINEER

06-08-06 — DATE

Washington State Department of Transportation

EFFECTIVE: APRIL 2, 2007 TO JANUARY 6, 2008

EFFECTIVE: APRIL 2, 2007 TO JANUARY 6, 2008

DRAWN BY: ADAM COCHRAN

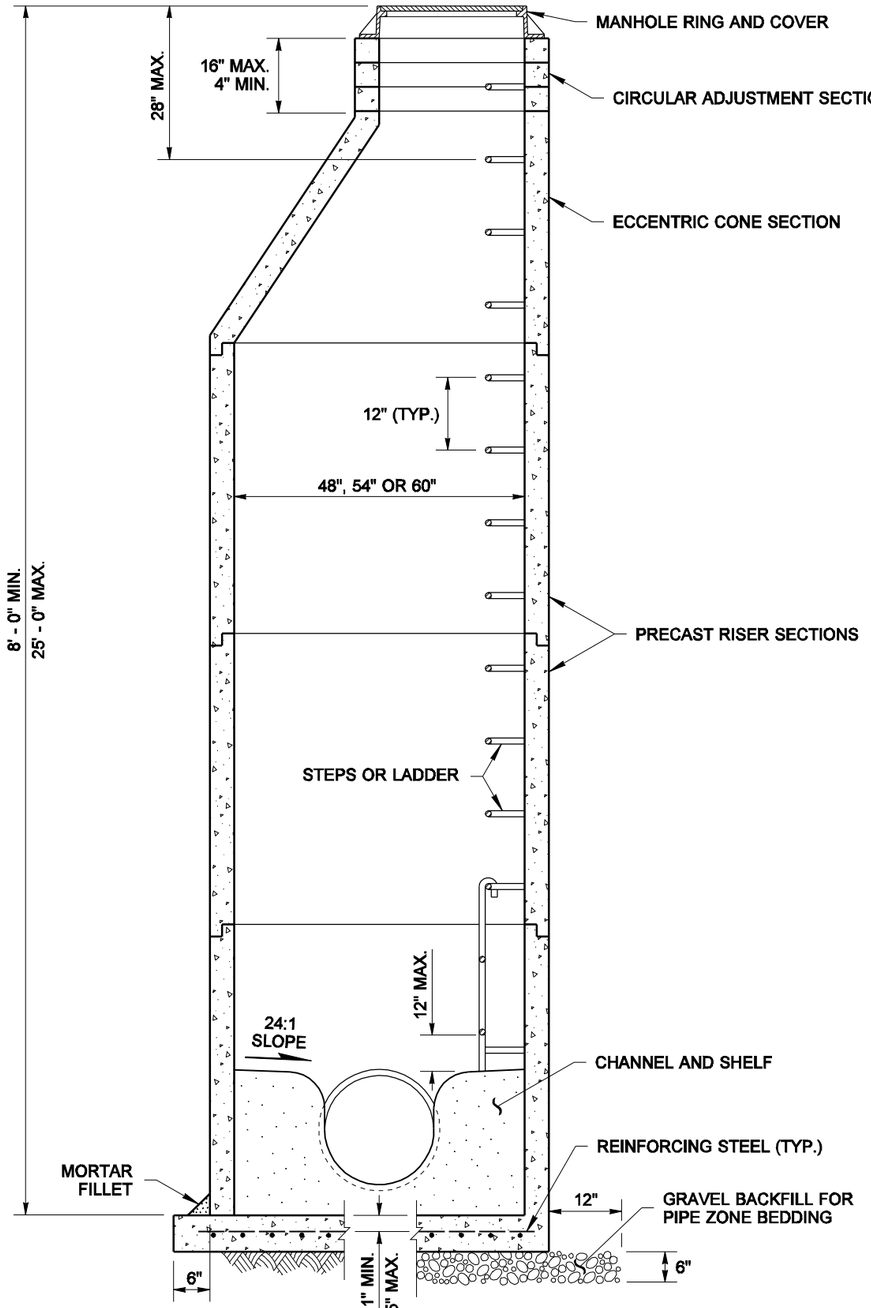

SEPARATE BASE
CAST-IN-PLACE

INTEGRAL BASE
PRECAST WITH RISER

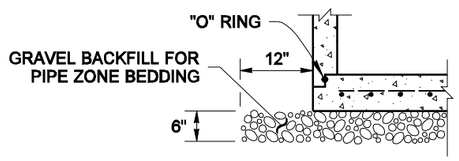

SEPARATE BASE
PRECAST

NOTE

Knockouts shall have a wall thickness of 2" minimum to 2.5" maximum.

MANHOLE DIMENSION TABLE

DIAM.	WALL THICKNESS	BASE THICKNESS	MAXIMUM KNOCKOUT SIZE	MINIMUM DISTANCE BETWEEN KNOCKOUTS	BASE REINFORCING STEEL in^2 /ft. IN EACH DIRECTION	
					SEPARATE BASE	INTEGRAL BASE
48"	4"	6"	36"	8"	0.23	0.15
54"	4.5"	8"	42"	8"	0.19	0.19
60"	5"	8"	48"	8"	0.25	0.25



EXPIRES JULY 1, 2007

NOTE: THIS PLAN IS NOT A LEGAL ENGINEERING DOCUMENT BUT AN ELECTRONIC DUPLICATE. THE ORIGINAL, SIGNED BY THE ENGINEER AND APPROVED FOR PUBLICATION, IS KEPT ON FILE AT THE WASHINGTON STATE DEPARTMENT OF TRANSPORTATION. A COPY MAY BE OBTAINED UPON REQUEST.

MANHOLE TYPE 1

STANDARD PLAN B-15.20-00

SHEET 1 OF 1 SHEET

APPROVED FOR PUBLICATION

Harold J. Peterfeso — STATE DESIGN ENGINEER

06-01-06 — DATE

Washington State Department of Transportation

EFFECTIVE: APRIL 2, 2007 TO JANUARY 6, 2008

EFFECTIVE: APRIL 2, 2007 TO JANUARY 6, 2008

DRAWN BY: ADAM COCHRAN

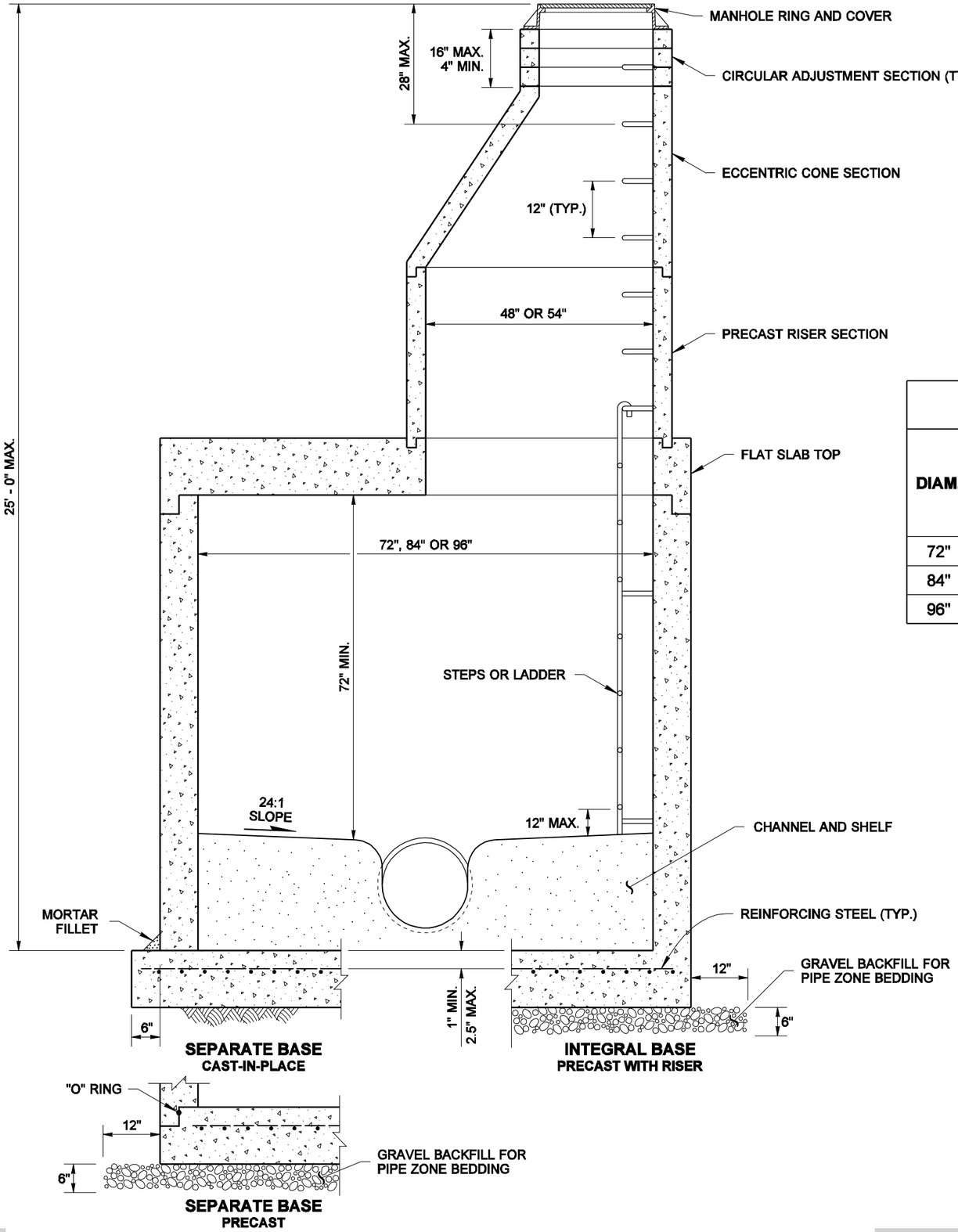

NOTE

Knockouts shall have a wall thickness of 2" minimum to 2.5" maximum.

MANHOLE DIMENSION TABLE

DIAM.	WALL THICKNESS	BASE THICKNESS	MAXIMUM KNOCKOUT SIZE	MINIMUM DISTANCE BETWEEN KNOCKOUTS	BASE REINFORCING STEEL in^2 /ft. IN EACH DIRECTION	
					SEPARATE BASE	INTEGRAL BASE
72"	6"	8"	60"	12"	0.35	0.24
84"	8"	12"	72"	12"	0.39	0.29
96"	8"	12"	84"	12"	0.39	0.29

MATTHEW J. WITECKI
STATE OF WASHINGTON
15588
REGISTERED
PROFESSIONAL ENGINEER

EXPIRES JULY 1, 2007

NOTE: THIS PLAN IS NOT A LEGAL ENGINEERING DOCUMENT BUT AN ELECTRONIC DUPLICATE. THE ORIGINAL, SIGNED BY THE ENGINEER AND APPROVED FOR PUBLICATION, IS KEPT ON FILE AT THE WASHINGTON STATE DEPARTMENT OF TRANSPORTATION. A COPY MAY BE OBTAINED UPON REQUEST.

MANHOLE TYPE 2

STANDARD PLAN B-15.40-00

SHEET 1 OF 1 SHEET

APPROVED FOR PUBLICATION

Harold J. Peterfeso — STATE DESIGN ENGINEER

06-01-06 — DATE

Washington State Department of Transportation

EFFECTIVE: APRIL 2, 2007 TO JANUARY 6, 2008

EFFECTIVE: APRIL 2, 2007 TO JANUARY 6, 2008

DRAWN BY: ADAM COCHRAN

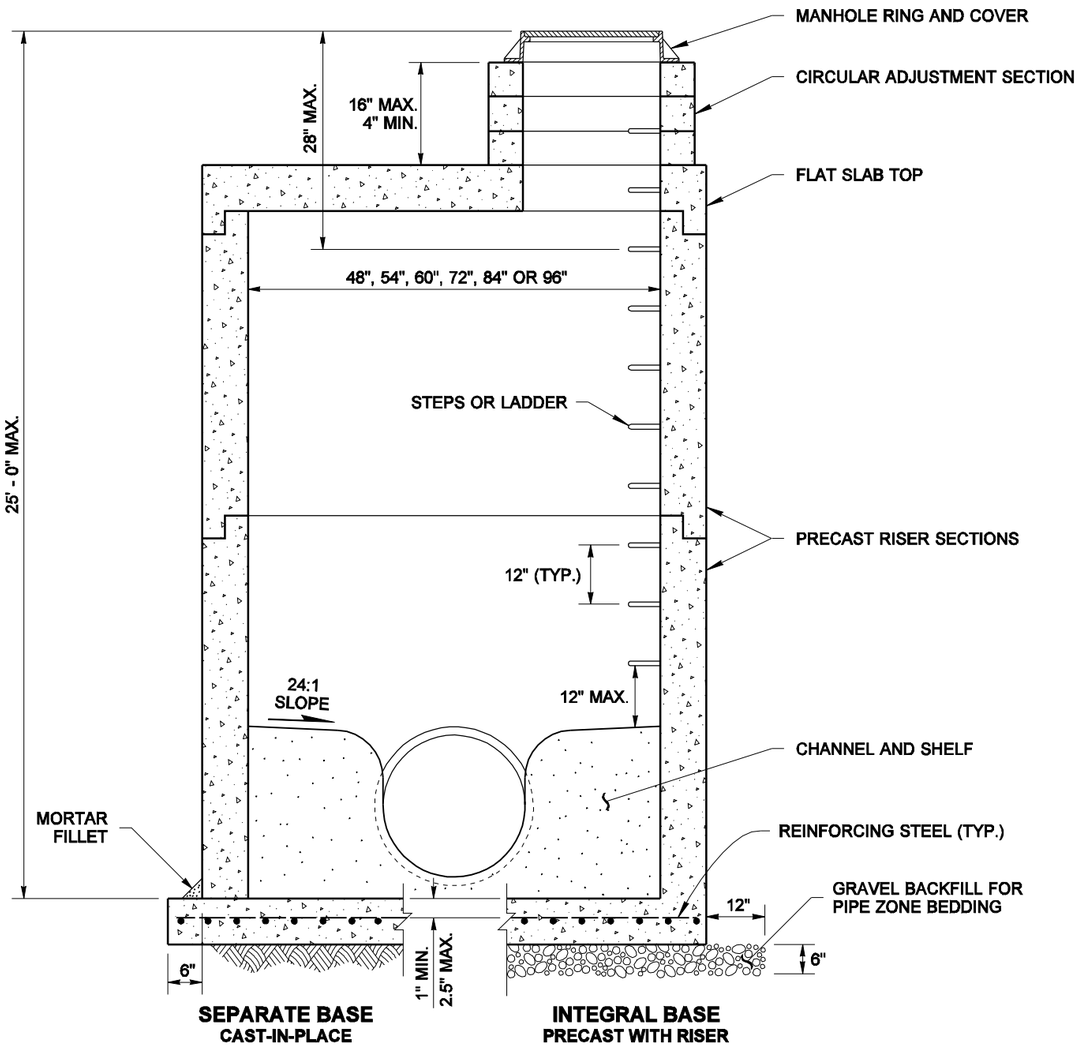

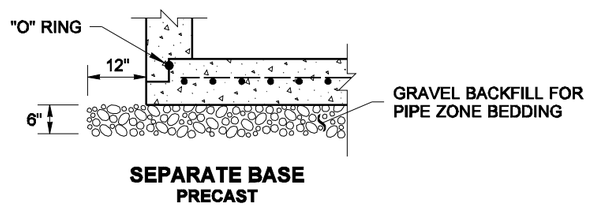

NOTE

Knockouts shall have a wall thickness of 2" minimum to 2.5" maximum.

MANHOLE DIMENSION TABLE

DIAM.	WALL THICKNESS	BASE THICKNESS	MAXIMUM KNOCKOUT SIZE	MINIMUM DISTANCE BETWEEN KNOCKOUTS	BASE REINFORCING STEEL in^2 /ft. IN EACH DIRECTION	
					SEPARATE BASE	INTEGRAL BASE
48"	4"	6"	36"	8"	0.23	0.15
54"	4.5"	8"	42"	8"	0.19	0.19
60"	5"	8"	48"	8"	0.25	0.25
72"	6"	8"	60"	12"	0.35	0.24
84"	8"	12"	72"	12"	0.39	0.29
96"	8"	12"	84"	12"	0.39	0.29



EXPIRES JULY 1, 2007

NOTE: THIS PLAN IS NOT A LEGAL ENGINEERING DOCUMENT BUT AN ELECTRONIC DUPLICATE. THE ORIGINAL, SIGNED BY THE ENGINEER AND APPROVED FOR PUBLICATION, IS KEPT ON FILE AT THE WASHINGTON STATE DEPARTMENT OF TRANSPORTATION. A COPY MAY BE OBTAINED UPON REQUEST.

MANHOLE TYPE 3

STANDARD PLAN B-15.60-00

SHEET 1 OF 1 SHEET

APPROVED FOR PUBLICATION

Harold J. Peterfeso — STATE DESIGN ENGINEER — *06-01-06* — DATE

Washington State Department of Transportation

EFFECTIVE: APRIL 2, 2007 TO JANUARY 6, 2008

EFFECTIVE: APRIL 2, 2007 TO JANUARY 6, 2008

EFFECTIVE: APRIL 2, 2007 TO JANUARY 6, 2008

EFFECTIVE: APRIL 2, 2007 TO JANUARY 6, 2008

DRAWN BY: ADAM COCHRAN

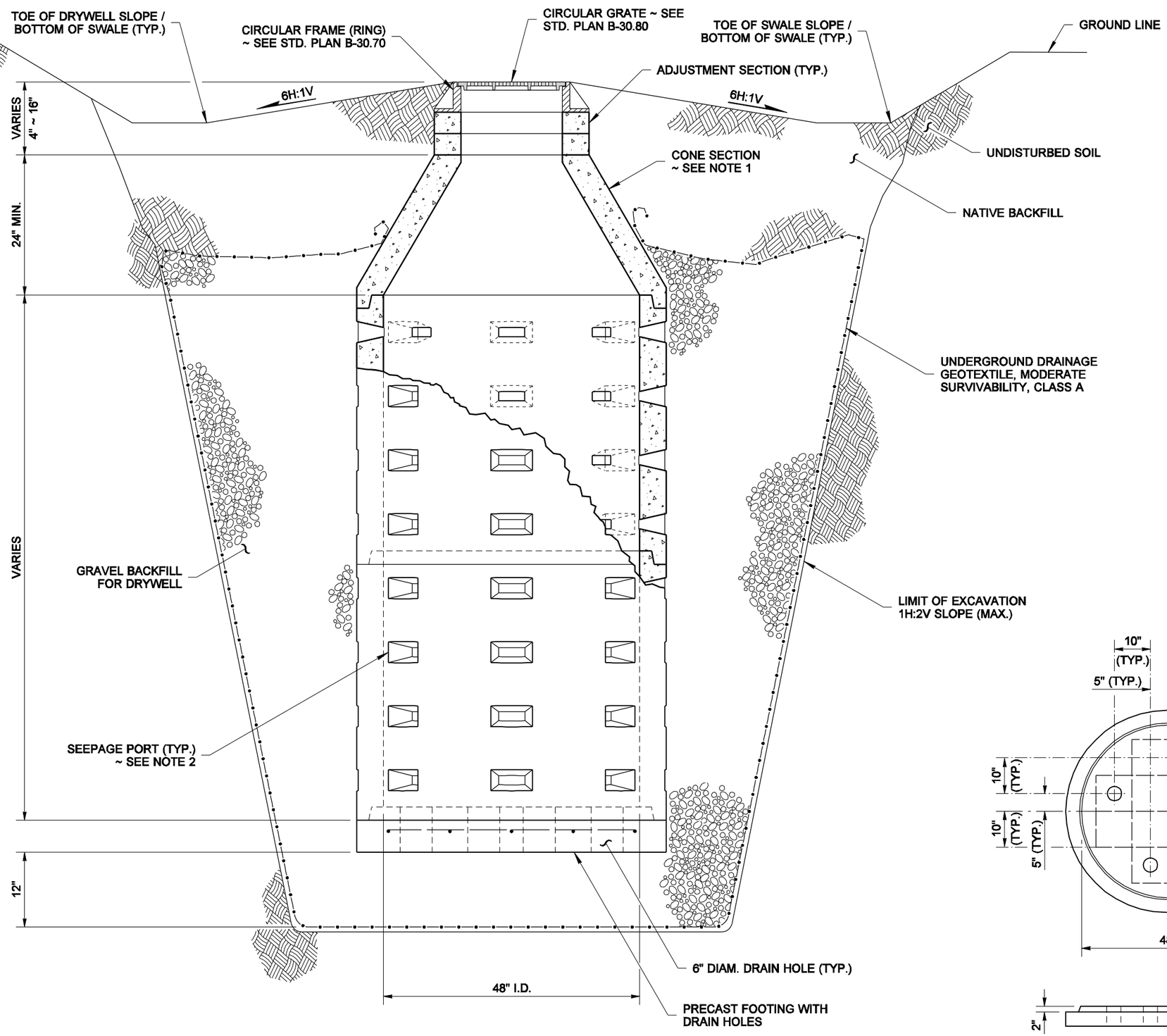

CUTAWAY ELEVATION VIEW

NOTES

1. Precast cone sections may be eccentric or concentric.
2. Seepage port orientation varies among manufacturers.

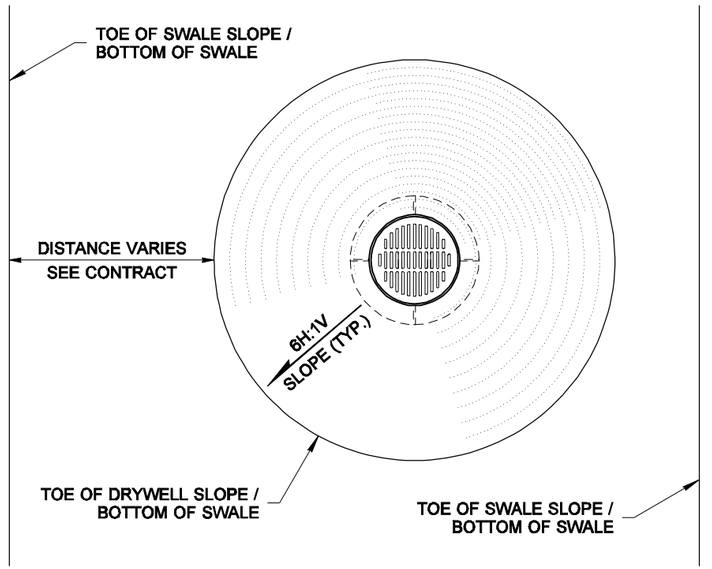

PLAN VIEW

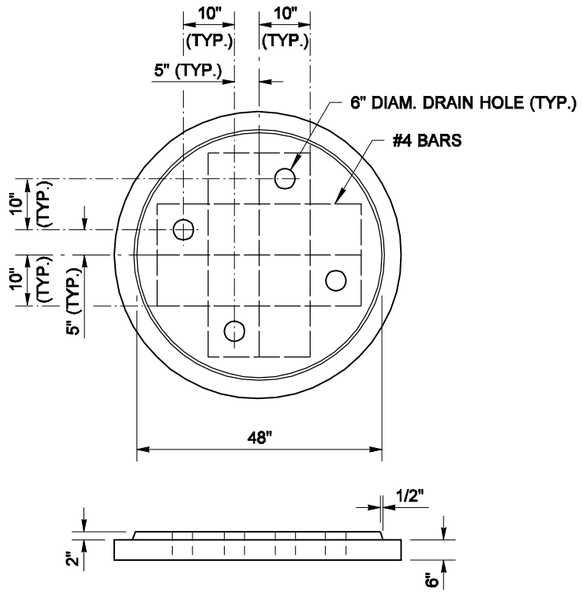

PRECAST FOOTING DETAIL

MATTHEW J. WITECKI
STATE OF WASHINGTON
15588
REGISTERED PROFESSIONAL ENGINEER

EXPIRES JULY 1, 2007

NOTE: THIS PLAN IS NOT A LEGAL ENGINEERING DOCUMENT BUT AN ELECTRONIC DUPLICATE. THE ORIGINAL, SIGNED BY THE ENGINEER AND APPROVED FOR PUBLICATION, IS KEPT ON FILE AT THE WASHINGTON STATE DEPARTMENT OF TRANSPORTATION. A COPY MAY BE OBTAINED UPON REQUEST.

DRYWELL TYPE 1 (FOR SWALE)

STANDARD PLAN B-20.20-01

SHEET 1 OF 1 SHEET

APPROVED FOR PUBLICATION

Kevin J. Dayton — STATE DESIGN ENGINEER — *11-21-06* — DATE

Washington State Department of Transportation

EFFECTIVE: APRIL 2, 2007 TO JANUARY 6, 2008

EFFECTIVE: APRIL 2, 2007 TO JANUARY 6, 2008

EFFECTIVE: APRIL 2, 2007 TO JANUARY 6, 2008

EFFECTIVE: APRIL 2, 2007 TO JANUARY 6, 2008

EFFECTIVE: APRIL 2, 2007 TO JANUARY 6, 2008

DRAWN BY: ADAM COCHRAN

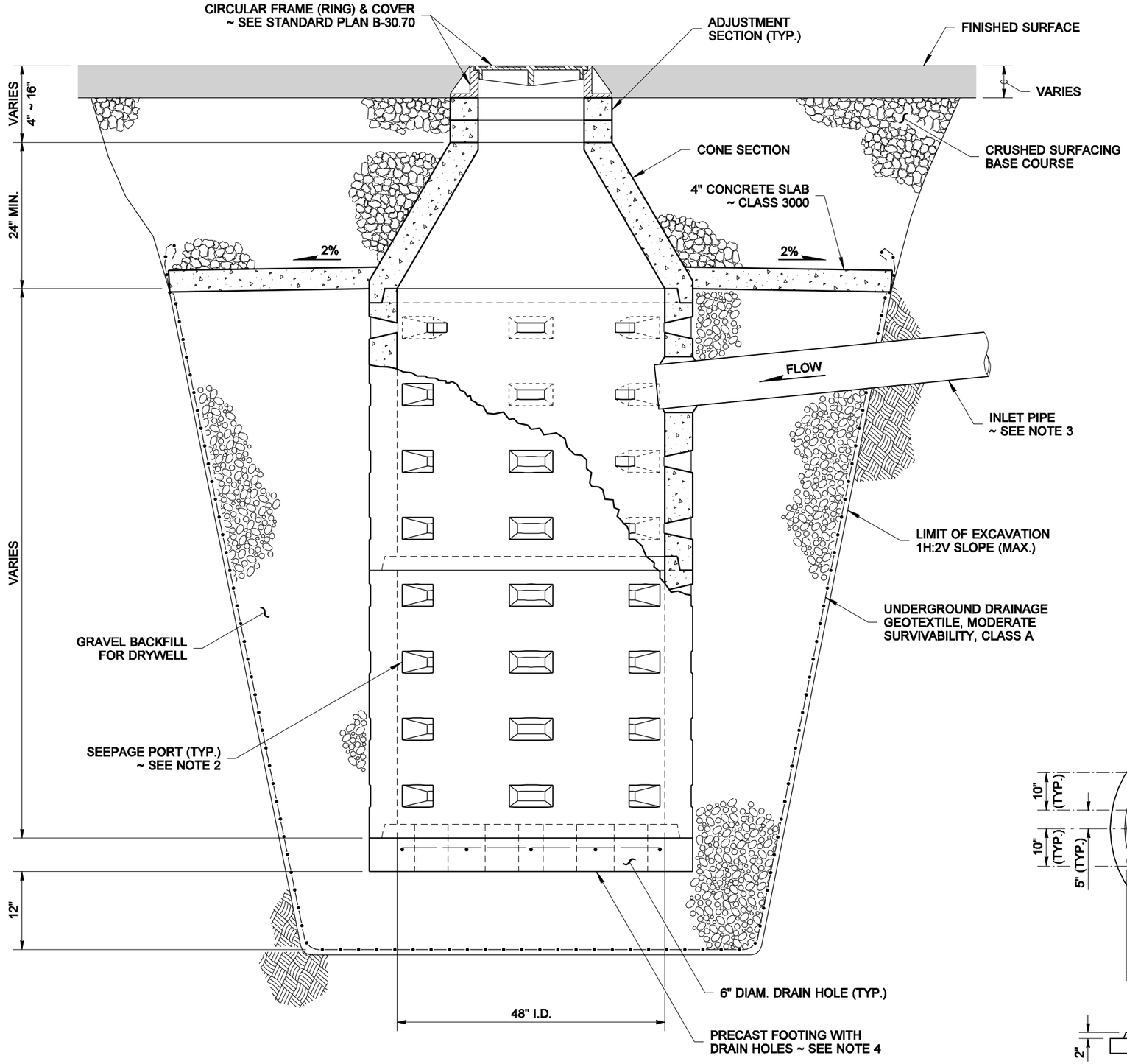

CUTAWAY ELEVATION VIEW

NOTES

1. Precast concrete cone sections may be eccentric or concentric.
2. Seepage port orientation varies among manufacturers.
3. Connect inlet pipe to structure using precast hole or core drilled hole.
4. For depths over 15' use 72" x 8" Alternative Precast Footing.

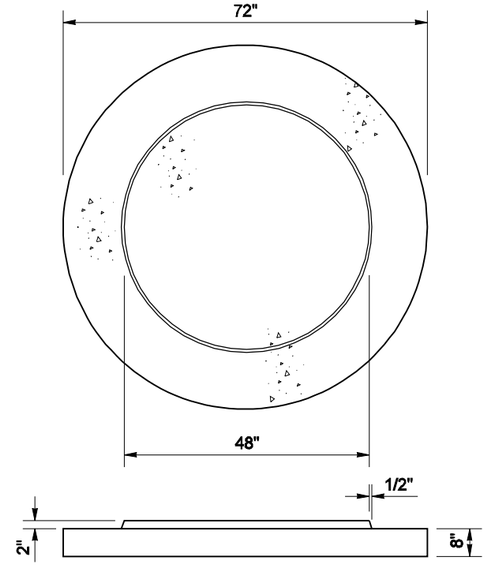

ALTERNATIVE PRECAST FOOTING DETAIL

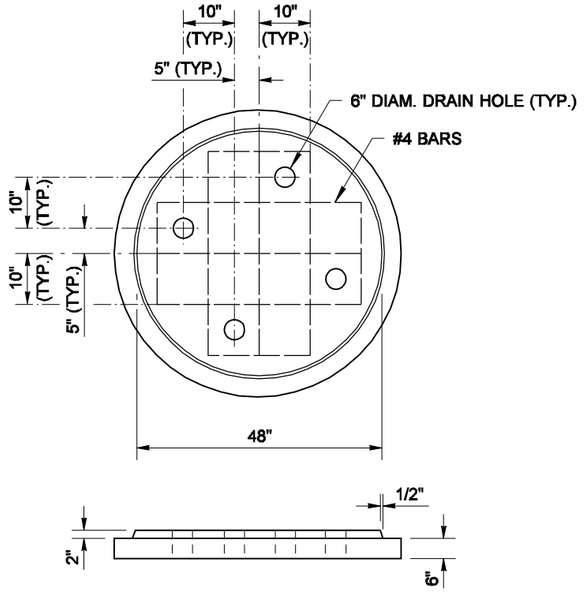

PRECAST FOOTING DETAIL

MATTHEW J. WITECKI
STATE OF WASHINGTON
15588
REGISTERED
PROFESSIONAL ENGINEER

EXPIRES JULY 1, 2007

NOTE: THIS PLAN IS NOT A LEGAL ENGINEERING DOCUMENT BUT AN ELECTRONIC DUPLICATE. THE ORIGINAL, SIGNED BY THE ENGINEER, AND APPROVED FOR PUBLICATION, IS KEPT ON FILE AT THE WASHINGTON STATE DEPARTMENT OF TRANSPORTATION. A COPY MAY BE OBTAINED UPON REQUEST.

DRYWELL TYPE 2 (WITH PIPE INLET)

STANDARD PLAN B-20.40-01

SHEET 1 OF 1 SHEET

APPROVED FOR PUBLICATION

Kevin J. Dayton — STATE DESIGN ENGINEER — *11-21-06* — DATE

Washington State Department of Transportation

EFFECTIVE: APRIL 2, 2007 TO JANUARY 6, 2008

EFFECTIVE: APRIL 2, 2007 TO JANUARY 6, 2008

EFFECTIVE: APRIL 2, 2007 TO JANUARY 6, 2008

EFFECTIVE: APRIL 2, 2007 TO JANUARY 6, 2008

EFFECTIVE: APRIL 2, 2007 TO JANUARY 6, 2008

DRAWN BY: ADAM COCHRAN

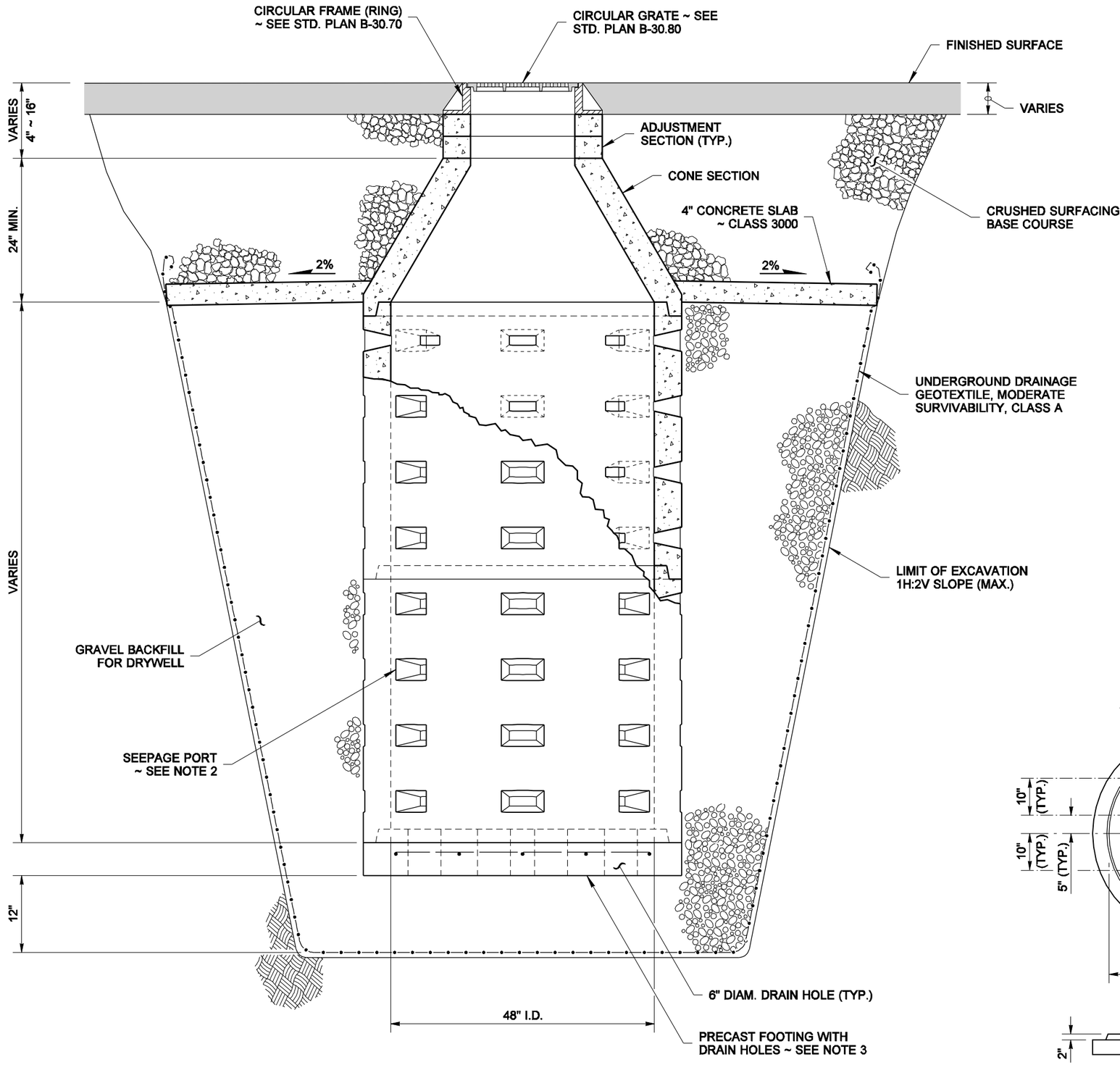

CUTAWAY ELEVATION VIEW

NOTES

1. Precast concrete cone sections may be eccentric or concentric.
2. Seepage port orientation varies among manufacturers.
3. For depths over 15' use 72" x 8" Alternative Precast Footing.

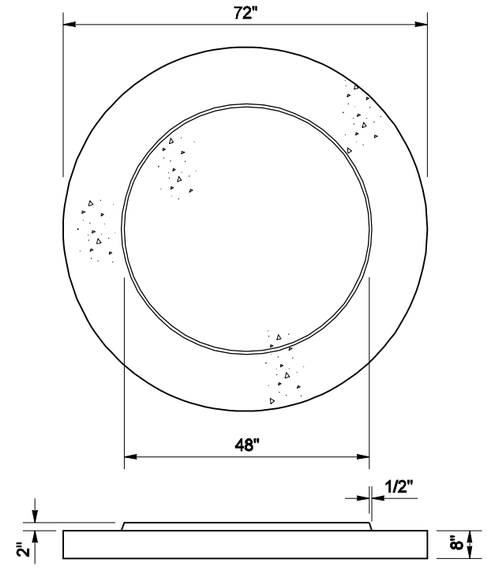

ALTERNATIVE PRECAST FOOTING DETAIL

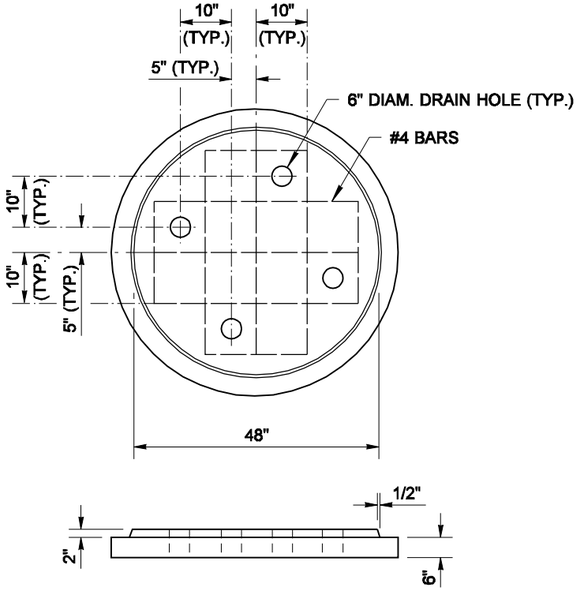

PRECAST FOOTING DETAIL

MATTHEW J. WITECKI
STATE OF WASHINGTON
15588
REGISTERED
PROFESSIONAL ENGINEER

EXPIRES JULY 1, 2007

NOTE: THIS PLAN IS NOT A LEGAL ENGINEERING DOCUMENT BUT AN ELECTRONIC DUPLICATE. THE ORIGINAL, SIGNED BY THE ENGINEER AND APPROVED FOR PUBLICATION, IS KEPT ON FILE AT THE WASHINGTON STATE DEPARTMENT OF TRANSPORTATION. A COPY MAY BE OBTAINED UPON REQUEST.

DRYWELL TYPE 3 (WITH AT-GRADE INLET)

STANDARD PLAN B-20.60-01

SHEET 1 OF 1 SHEET

APPROVED FOR PUBLICATION

Kevin J. Dayton — STATE DESIGN ENGINEER

11-21-06 — DATE

Washington State Department of Transportation

EFFECTIVE: APRIL 2, 2007 TO JANUARY 6, 2008

EFFECTIVE: APRIL 2, 2007 TO JANUARY 6, 2008

EFFECTIVE: APRIL 2, 2007 TO JANUARY 6, 2008

DRAWN BY: MARK SUJKA

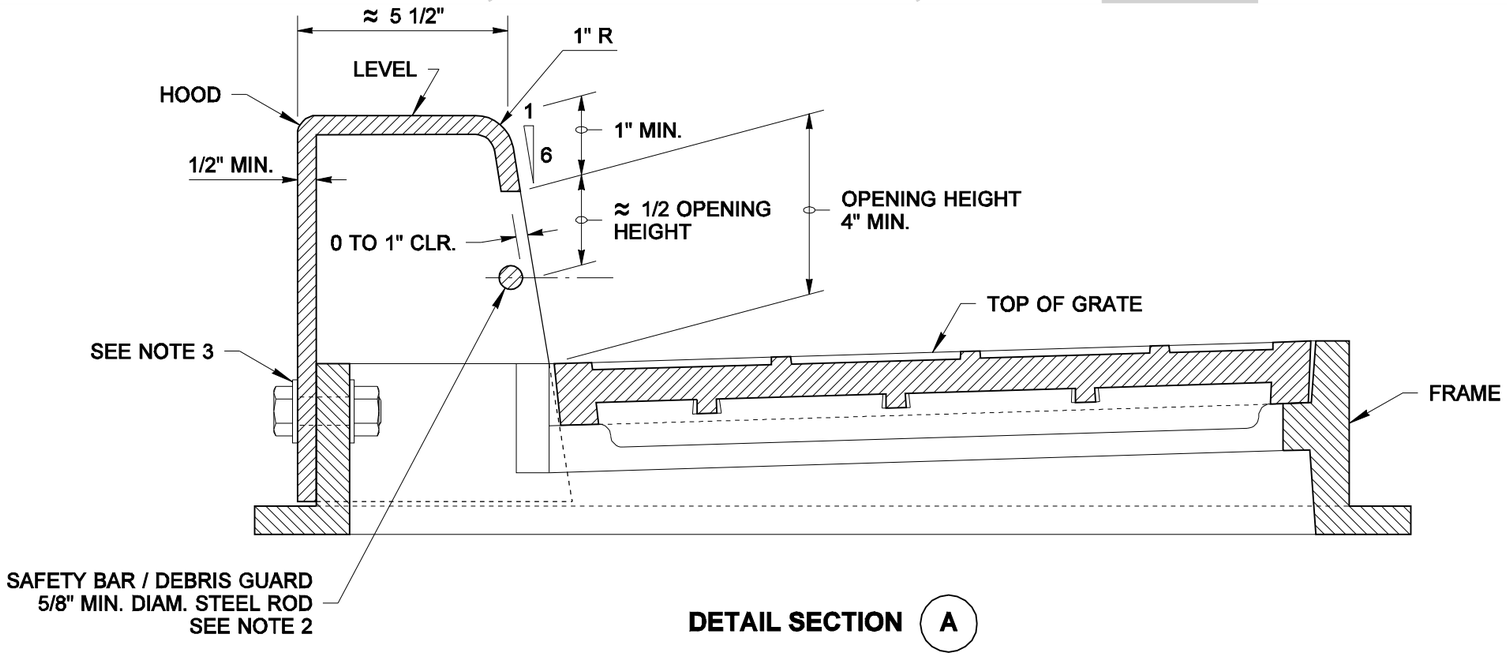

DETAIL SECTION (A)

NOTES

1. The asymmetry of the Combination Inlet shall be considered when calculating the offset distance for the catch basin. See **SECTION A**.

2. The dimensions of the Frame and Hood may vary slightly among different manufacturers. The Frame may have cast features intended to support a grate guard. Hood units shall mount outside of the Frame. The methods for fastening the Safety Bar / Debris Guard Rod to the Hood may vary. The Hood may include casting lugs. The top of the Hood may be cast with a pattern.

3. Attach the Hood to the frame with two 3/4" × 2" hex head bolts, nuts, and oversize washers. The washers shall have diameters adequate to assure full bearing across the slots.

4. When bolt-down grates are specified in the contract, provide two holes in the frame that are vertically aligned with the grate slots. Tap each hole to accept a 5/8" × - 11 NC × 2" allen head cap screw. Location of bolt-down holes varies among different manufacturers. See **BOLT- DOWN DETAIL** , Standard Plan B-30.10.

5. Only ductile iron Vaned Grates shall be used. See Standard Plans B-30.30 and B-30.40 for grate details. Refer to Standard Specification 9-05.15(2) for additional requirements.

6. This plan is intended to show the installation details of a manufactured product. It is not the intent of this plan to show the specific details necessary to fabricate the castings shown on this drawing.

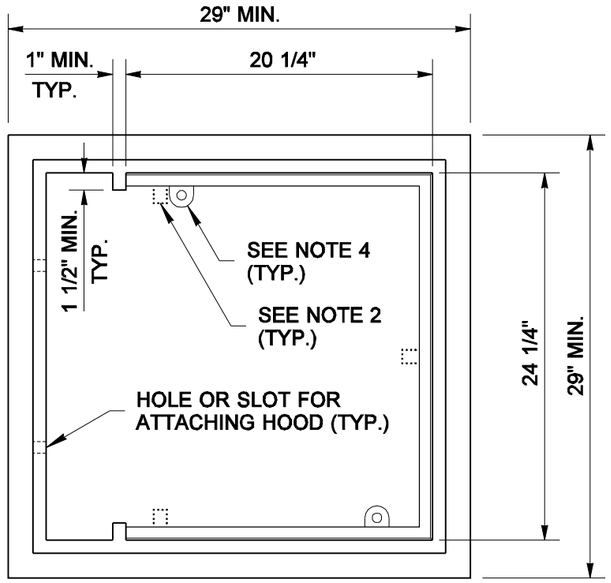

TOP VIEW

FRAME DETAIL

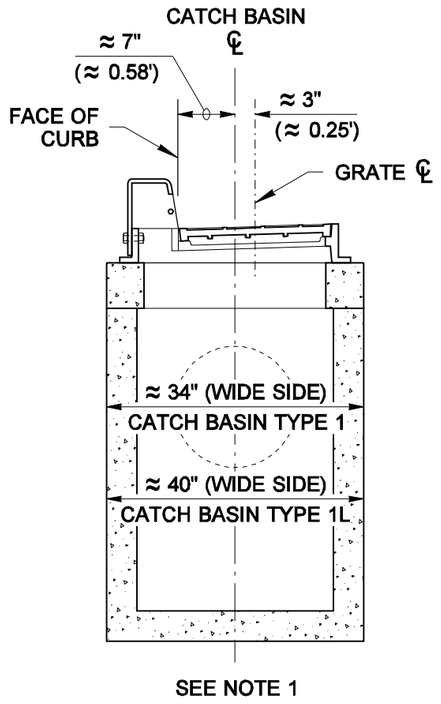

SEE NOTE 1

SECTION (A)

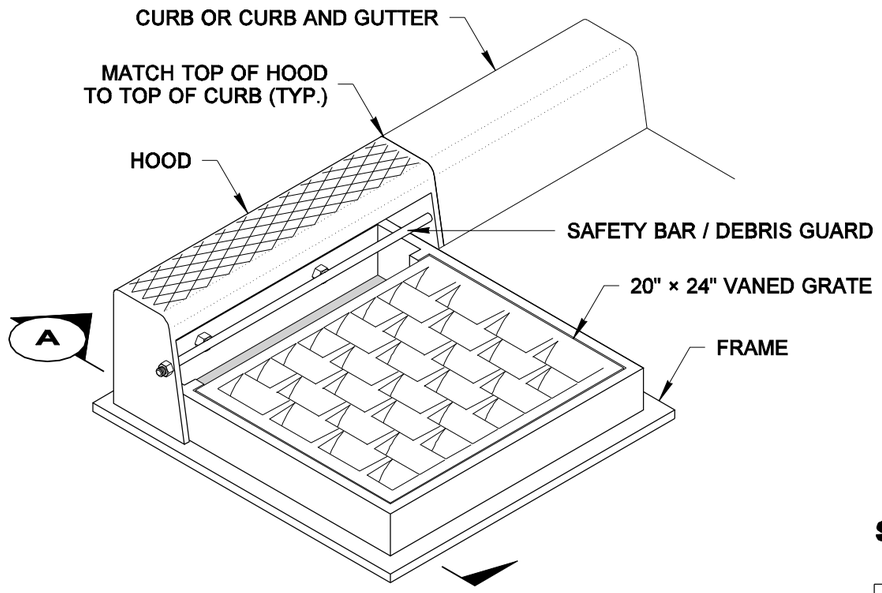

ISOMETRIC VIEW

COMBINATION INLET

FRAME, HOOD, AND VANED GRATE

MATTHEW J. WITECKI
STATE OF WASHINGTON
15588
REGISTERED
PROFESSIONAL ENGINEER

EXPIRES JULY 1, 2007

NOTE: THIS PLAN IS NOT A LEGAL ENGINEERING DOCUMENT BUT AN ELECTRONIC DUPLICATE. THE ORIGINAL, SIGNED BY THE ENGINEER AND APPROVED FOR PUBLICATION, IS KEPT ON FILE AT THE WASHINGTON STATE DEPARTMENT OF TRANSPORTATION. A COPY MAY BE OBTAINED UPON REQUEST.

COMBINATION INLET

STANDARD PLAN B-25.20-00

SHEET 1 OF 1 SHEET

APPROVED FOR PUBLICATION

Harold J. Peterfeso — STATE DESIGN ENGINEER — *06-08-06* — DATE

Washington State Department of Transportation

EFFECTIVE: APRIL 2, 2007 TO JANUARY 6, 2008

EFFECTIVE: APRIL 2, 2007 TO JANUARY 6, 2008
EFFECTIVE: APRIL 2, 2007 TO JANUARY 6, 2008

DRAWN BY: MARK SUJKA

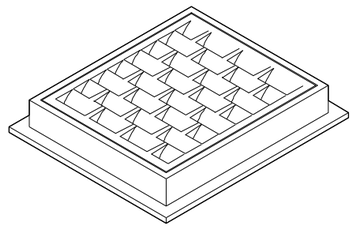

FRAME AND VANED GRATE

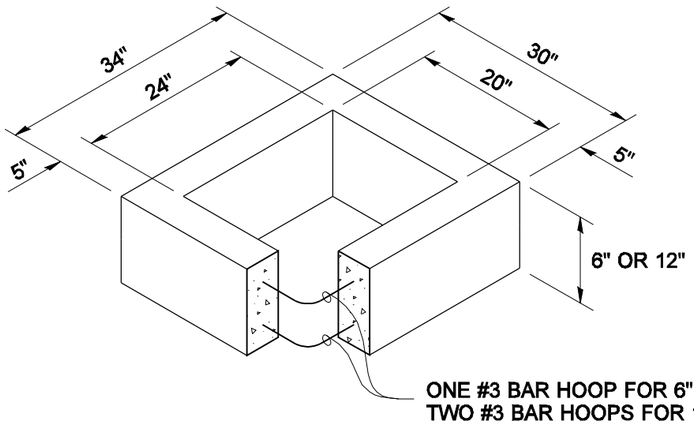

RECTANGULAR ADJUSTMENT SECTION

PIPE ALLOWANCES	
PIPE MATERIAL	**MAXIMUM INSIDE DIAMETER**
REINFORCED OR PLAIN CONCRETE	12"
ALL METAL PIPE	15"
CPSSP * (STD. SPEC. 9-05.20)	12"
SOLID WALL PVC (STD. SPEC. 9-05.12(1))	15"
PROFILE WALL PVC (STD. SPEC. 9-05.12(2))	15"

* CORRUGATED POLYETHYLENE STORM SEWER PIPE

NOTES

1. As acceptable alternatives to the rebar shown in the **PRECAST BASE SECTION**, fibers (placed according to the Standard Specifications), or wire mesh having a minimum area of 0.12 square inches per foot shall be used with the minimum required rebar shown in the **ALTERNATIVE PRECAST BASE SECTION**. Wire mesh shall not be placed in the knockouts.
2. The knockout diameter shall not be greater than 18". Knockouts shall have a wall thickness of 2" minimum to 2.5" maximum. Provide a 1.5" minimum gap between the knockout wall and the outside of the pipe. After the pipe is installed, fill the gap with joint mortar in accordance with Standard Specification 9-04.3.
3. The maximum depth from the finished grade to the lowest pipe invert shall be 5'.
4. The frame and grate may be installed with the flange up or down. The frame may be cast into the adjustment section.
5. The Precast Base Section may have a rounded floor, and the walls may be sloped at a rate of 1:24 or steeper.
6. The opening shall be measured at the top of the precast base section.
7. All pickup holes shall be grouted full after the inlet has been placed.

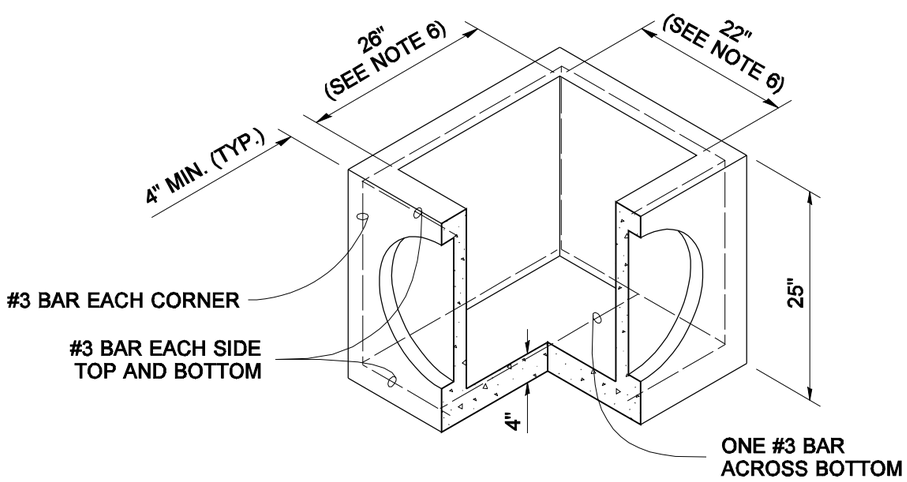

PRECAST BASE SECTION

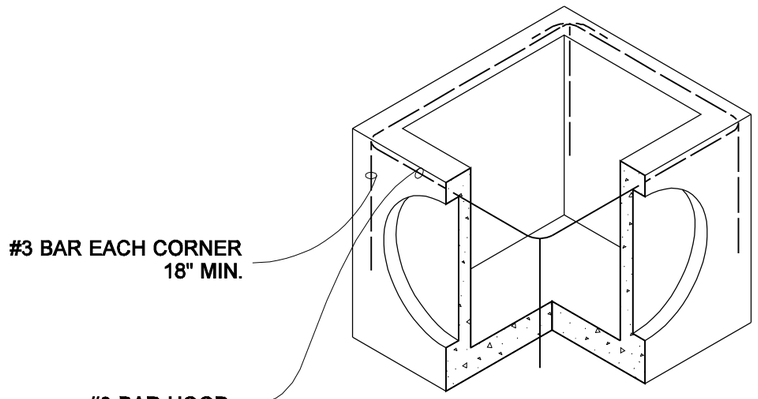

SEE NOTE 1

ALTERNATIVE PRECAST BASE SECTION



EXPIRES JULY 1, 2007

NOTE: THIS PLAN IS NOT A LEGAL ENGINEERING DOCUMENT BUT AN ELECTRONIC DUPLICATE. THE ORIGINAL, SIGNED BY THE ENGINEER AND APPROVED FOR PUBLICATION, IS KEPT ON FILE AT THE WASHINGTON STATE DEPARTMENT OF TRANSPORTATION. A COPY MAY BE OBTAINED UPON REQUEST.

CONCRETE INLET

STANDARD PLAN B-25.60-00

SHEET 1 OF 1 SHEET

APPROVED FOR PUBLICATION

Harold J. Peterfeso — STATE DESIGN ENGINEER — *06-01-06* — DATE

Washington State Department of Transportation

EFFECTIVE: APRIL 2, 2007 TO JANUARY 6, 2008
EFFECTIVE: APRIL 2, 2007 TO JANUARY 6, 2008

EFFECTIVE: APRIL 2, 2007 TO JANUARY 6, 2008

DRAWN BY: MARK SUJKA

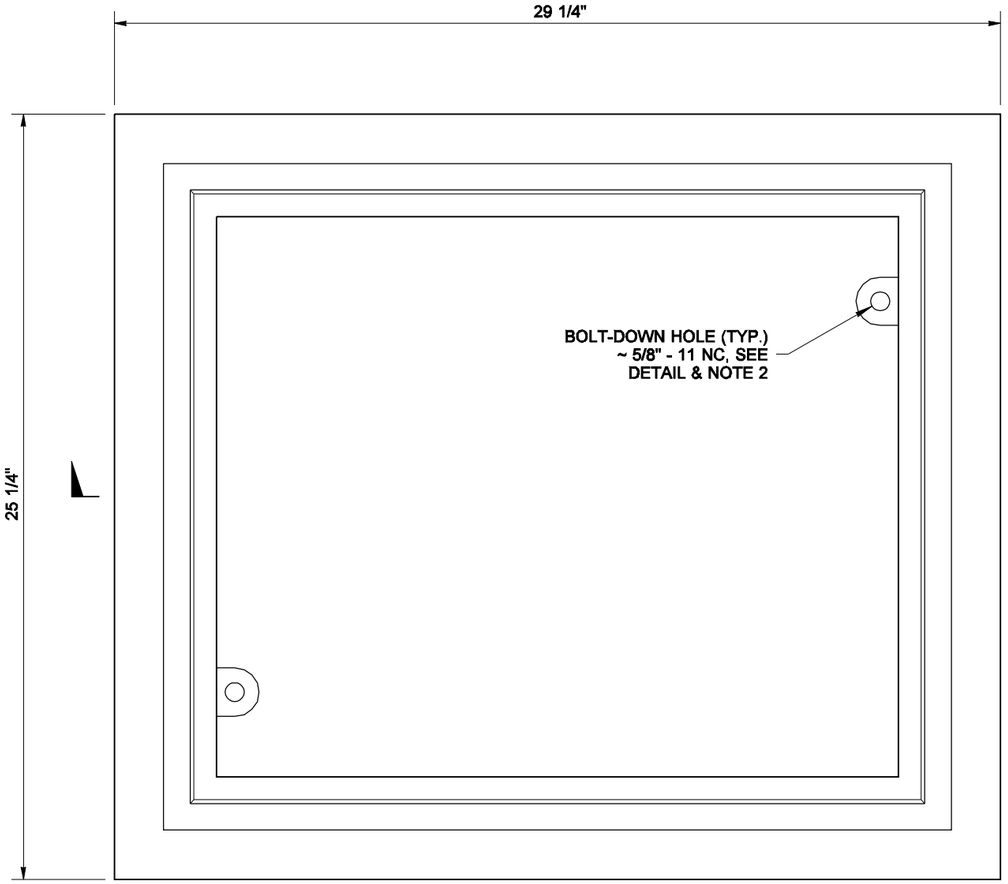

TOP

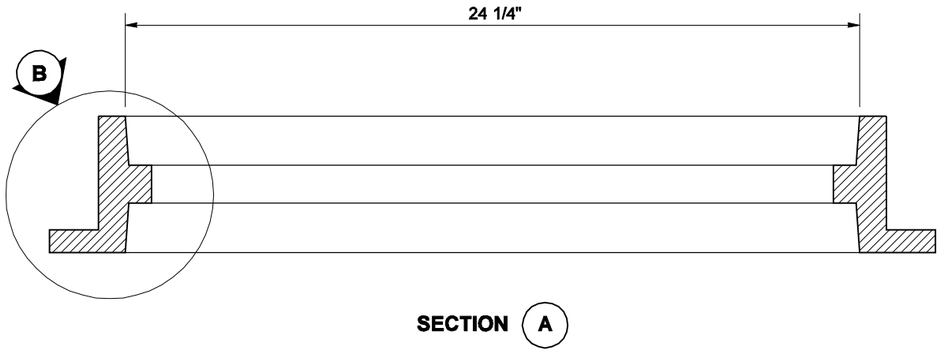

SECTION (A)

NOTES

1. This frame is designed to accommodate 20" × 24" grates or covers as shown on Standard Plans B-30.20, B-30.30, B-30.40 and B-30.50.
2. When bolt-down grates or covers are specified in the Contract, provide two holes in the frame that are vertically aligned with the grate or cover slots. Tap each hole to accept a 5/8" - 11 NC × 2" allen head cap screw. Location of bolt down holes varies among different manufacturers.
3. Refer to Standard Specification 9-05.15(2) for additional requirements.

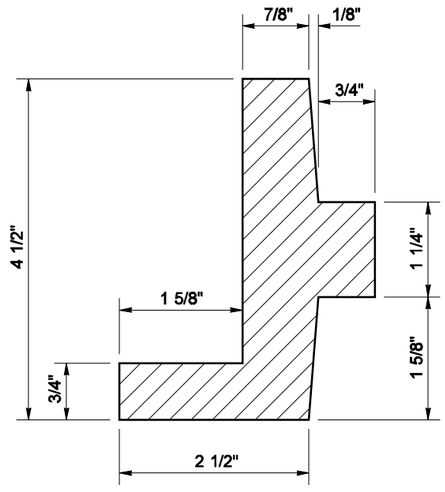

DETAIL (B)

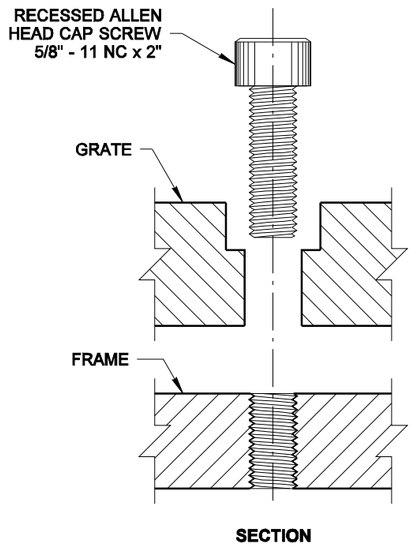

SECTION

BOLT-DOWN DETAIL
SEE NOTE 2

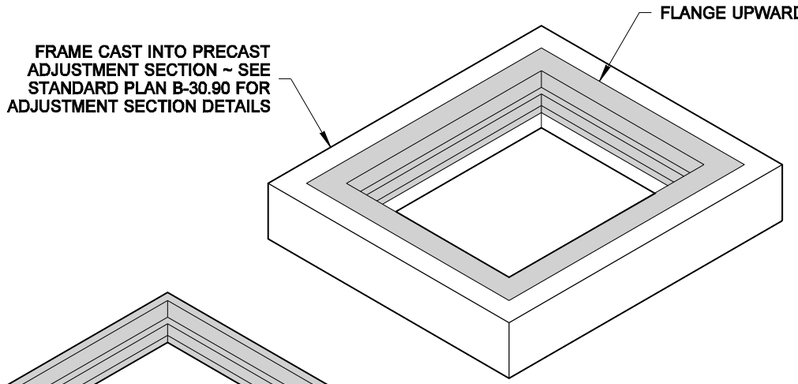

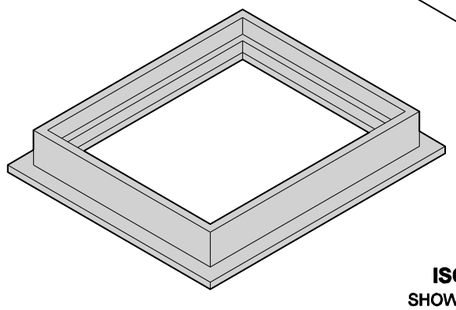

ISOMETRIC VIEW
SHOWING THE VARIATIONS

MATTHEW J. WITECKI
STATE OF WASHINGTON
15588
REGISTERED
PROFESSIONAL ENGINEER

EXPIRES JULY 1, 2007

NOTE: THIS PLAN IS NOT A LEGAL ENGINEERING DOCUMENT BUT AN ELECTRONIC DUPLICATE. THE ORIGINAL, SIGNED BY THE ENGINEER AND APPROVED FOR PUBLICATION, IS KEPT ON FILE AT THE WASHINGTON STATE DEPARTMENT OF TRANSPORTATION. A COPY MAY BE OBTAINED UPON REQUEST.

RECTANGULAR FRAME (REVERSIBLE)

STANDARD PLAN B-30.10-00

SHEET 1 OF 1 SHEET

APPROVED FOR PUBLICATION

Harold J. Peterfeso — STATE DESIGN ENGINEER

06-08-06 — DATE

Washington State Department of Transportation

EFFECTIVE: APRIL 2, 2007 TO JANUARY 6, 2008

EFFECTIVE: APRIL 2, 2007 TO JANUARY 6, 2008

DRAWN BY: MARK SUJKA

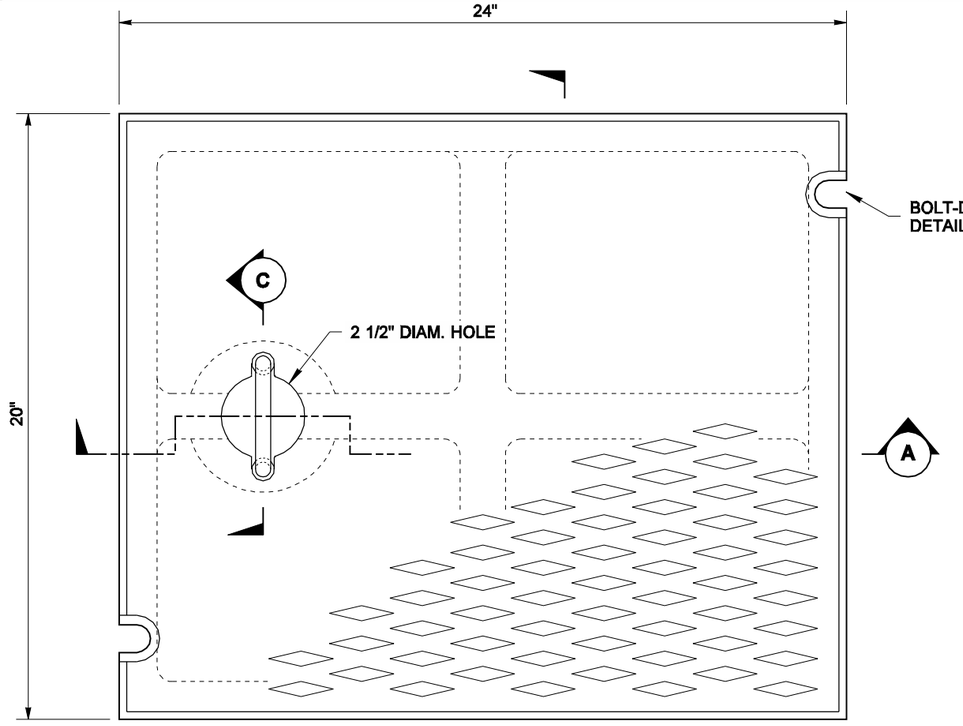

TOP

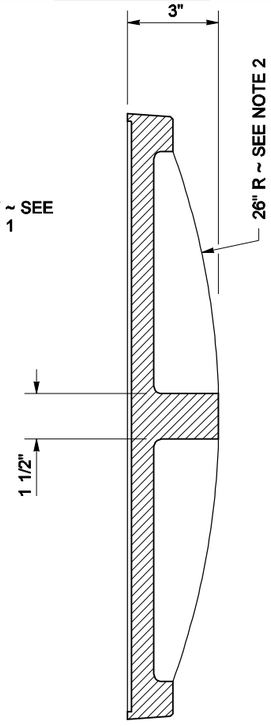

SECTION (B)

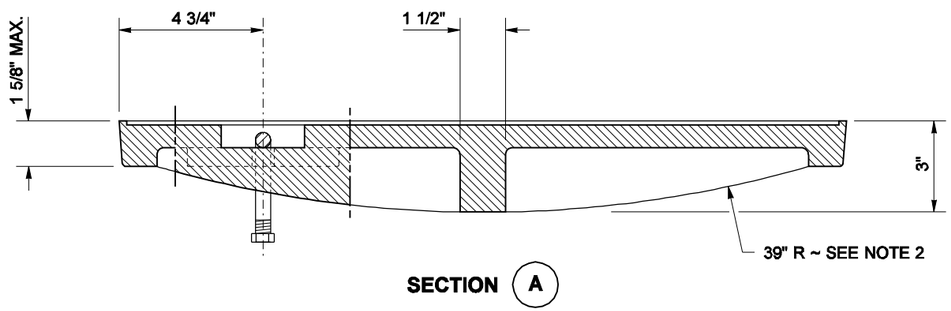

SECTION (A)

NOTES

1. When bolt-down covers are specified in the Contract, provide two slots in the cover that are vertically aligned with the holes in the frame. Location of bolt-down slots varies among different manufacturers.
2. Alternative reinforcing designs are acceptable in lieu of the rib design.
3. Refer to Standard Specification 9-05.15(2) for additional requirements.
4. For frame details, see Standard Plan B-30.10.

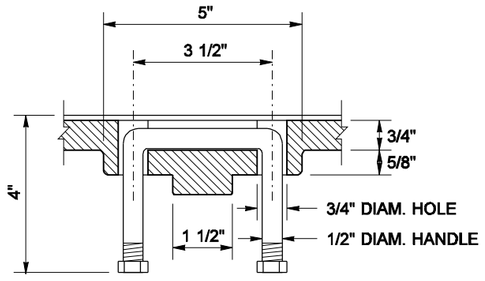

SECTION (C)

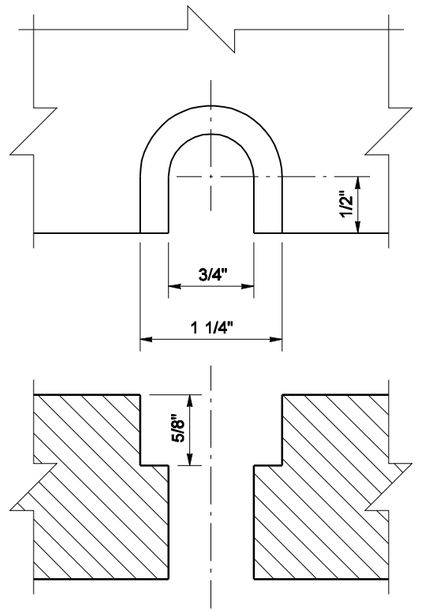

BOLT-DOWN SLOT DETAIL
SEE NOTE 1

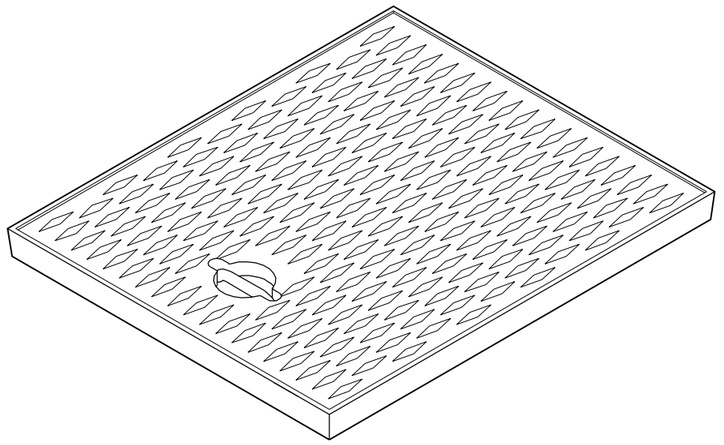

ISOMETRIC

MATTHEW J. WITECKI
STATE OF WASHINGTON
15588
REGISTERED
PROFESSIONAL ENGINEER

EXPIRES JULY 1, 2007

NOTE: THIS PLAN IS NOT A LEGAL ENGINEERING DOCUMENT BUT AN ELECTRONIC DUPLICATE. THE ORIGINAL, SIGNED BY THE ENGINEER AND APPROVED FOR PUBLICATION, IS KEPT ON FILE AT THE WASHINGTON STATE DEPARTMENT OF TRANSPORTATION. A COPY MAY BE OBTAINED UPON REQUEST.

RECTANGULAR SOLID METAL COVER

STANDARD PLAN B-30.20-01

SHEET 1 OF 1 SHEET

APPROVED FOR PUBLICATION

Kevin J. Dayton — STATE DESIGN ENGINEER — *11-21-06* — DATE

Washington State Department of Transportation

EFFECTIVE: APRIL 2, 2007 TO JANUARY 6, 2008

EFFECTIVE: APRIL 2, 2007 TO JANUARY 6, 2008

DRAWN BY: MARK SUJKA

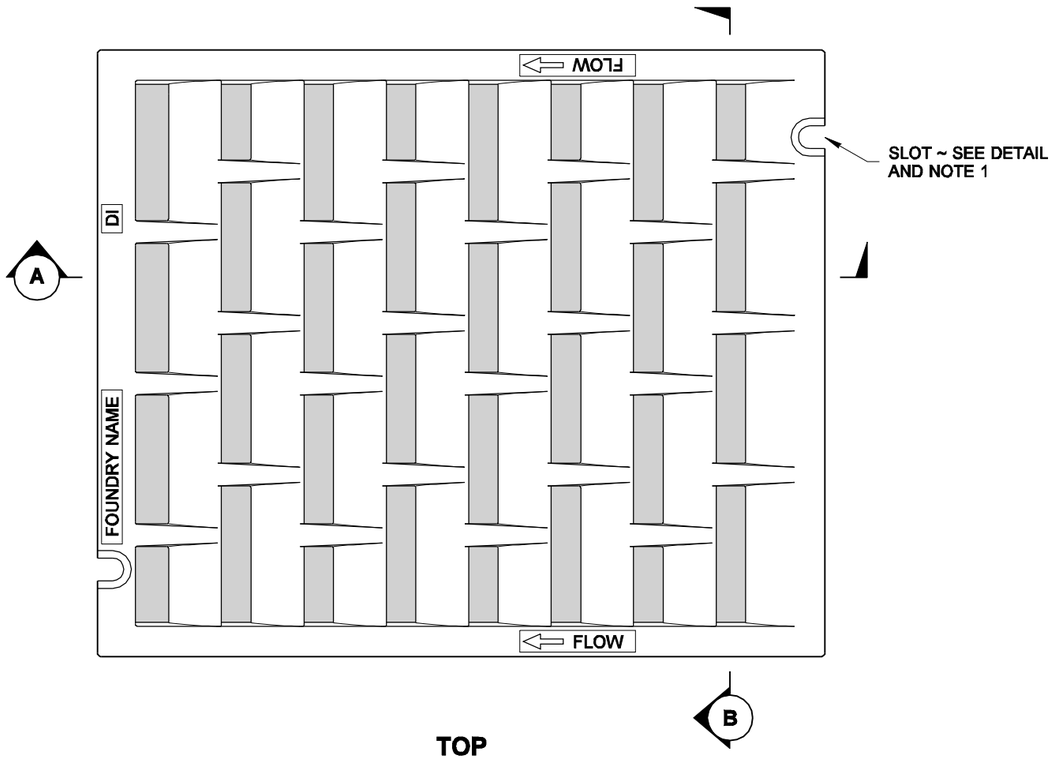

TOP

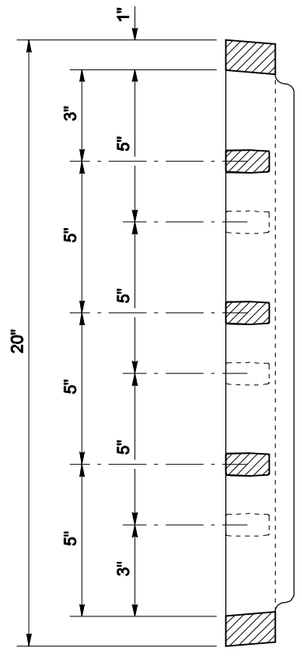

SECTION B

NOTES

1. When bolt-down grates are specified in the Contract, provide two slots in the grate that are vertically aligned with the holes in the frame. Location of bolt-down slots varies among different manufacturers.
2. Refer to Standard Specification 9-05.15(2) for additional requirements.
3. For Frame details, see Standard Plan B-30.10.

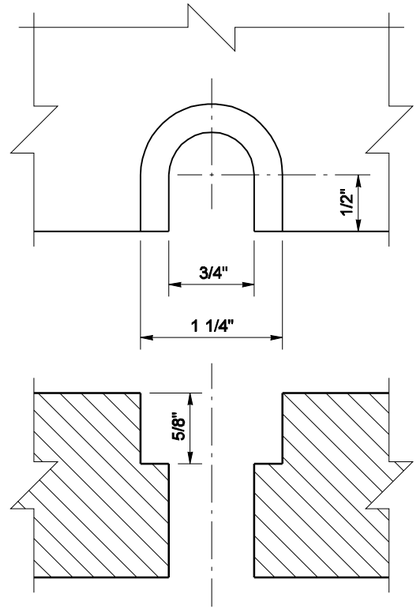

BOLT-DOWN SLOT DETAIL
SEE NOTE 1

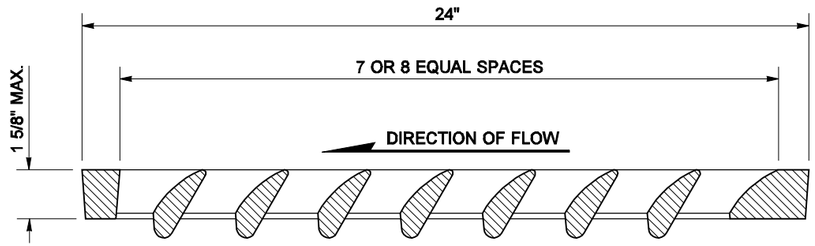

SECTION A

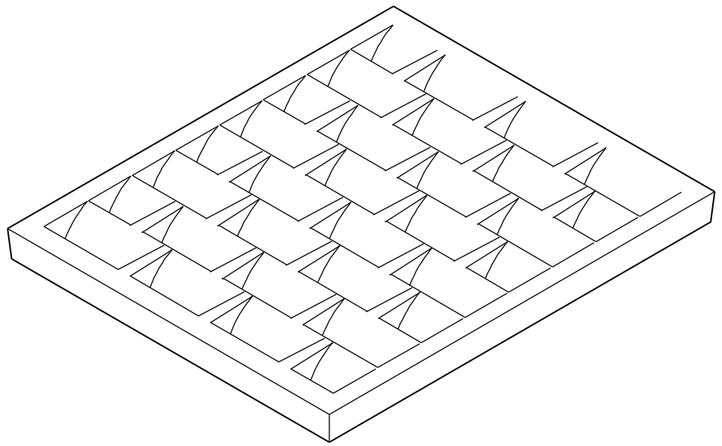

ISOMETRIC

MATTHEW J. WITECKI
STATE OF WASHINGTON
15588
REGISTERED
PROFESSIONAL ENGINEER

EXPIRES JULY 1, 2007

NOTE: THIS PLAN IS NOT A LEGAL ENGINEERING DOCUMENT BUT AN ELECTRONIC DUPLICATE. THE ORIGINAL, SIGNED BY THE ENGINEER AND APPROVED FOR PUBLICATION, IS KEPT ON FILE AT THE WASHINGTON STATE DEPARTMENT OF TRANSPORTATION. A COPY MAY BE OBTAINED UPON REQUEST.

RECTANGULAR VANED GRATE

STANDARD PLAN B-30.30-00

SHEET 1 OF 1 SHEET

APPROVED FOR PUBLICATION

Harold J. Peterfeso — STATE DESIGN ENGINEER — *06-01-06* — DATE

Washington State Department of Transportation

EFFECTIVE: APRIL 2, 2007 TO JANUARY 6, 2008

EFFECTIVE: APRIL 2, 2007 TO JANUARY 6, 2008

EFFECTIVE: APRIL 2, 2007 TO JANUARY 6, 2008

DRAWN BY: MARK SUJKA

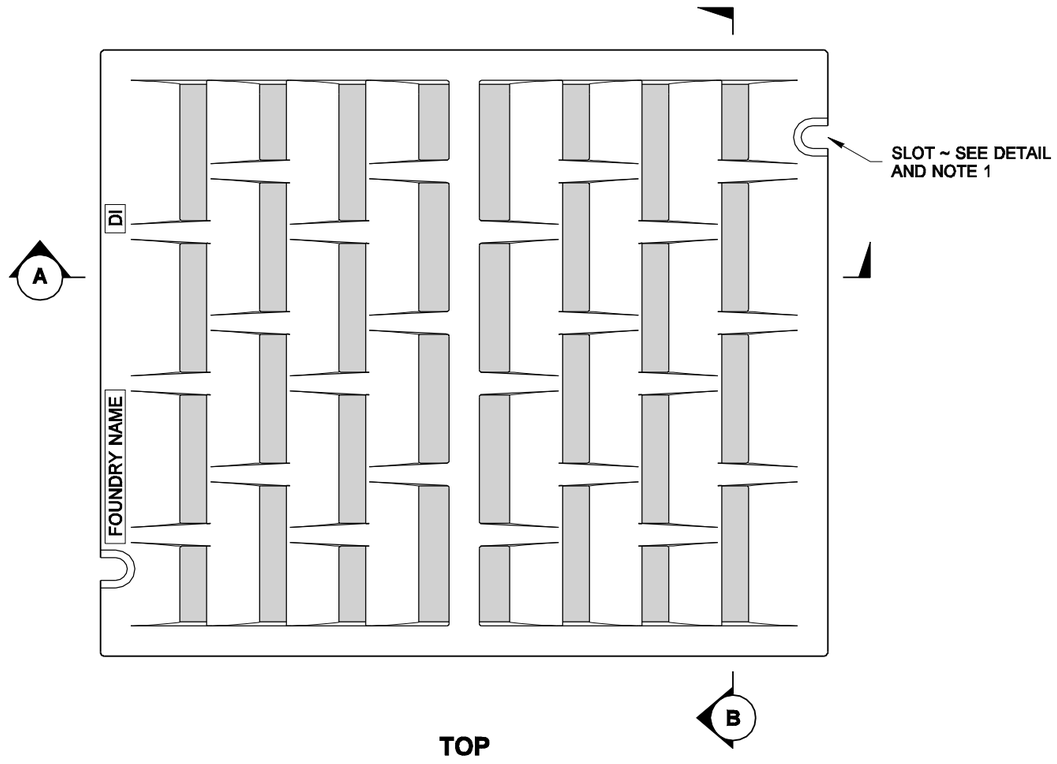

TOP

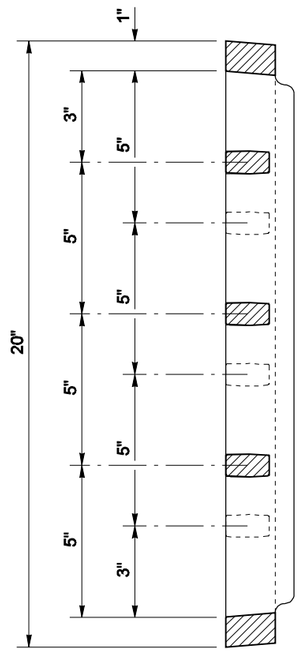

SECTION B

NOTES

1. When bolt-down grates are specified in the Contract, provide two slots in the grate that are vertically aligned with the holes in the frame. Location of bolt-down slots varies among different manufacturers.
2. Refer to Standard Specification 9-05.15(2) for additional requirements.
3. For Frame details, see Standard Plan B-30.10.

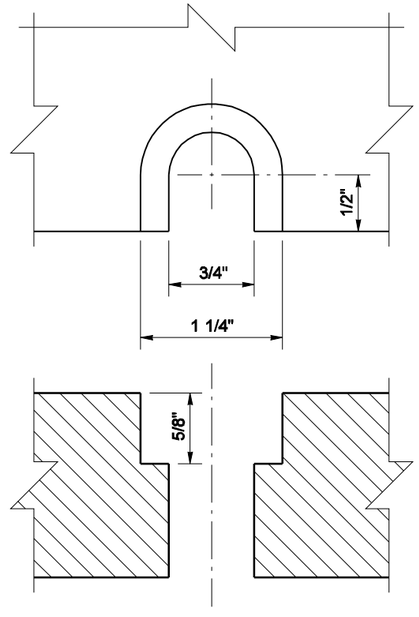

BOLT-DOWN SLOT DETAIL
SEE NOTE 1

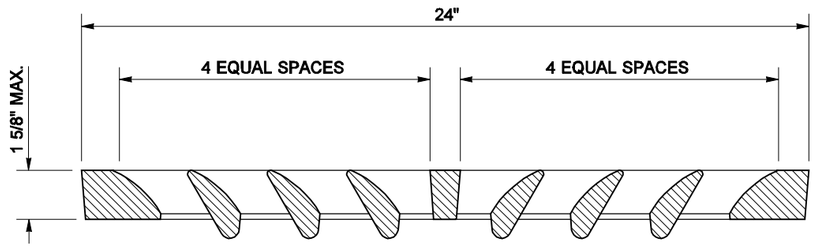

SECTION A

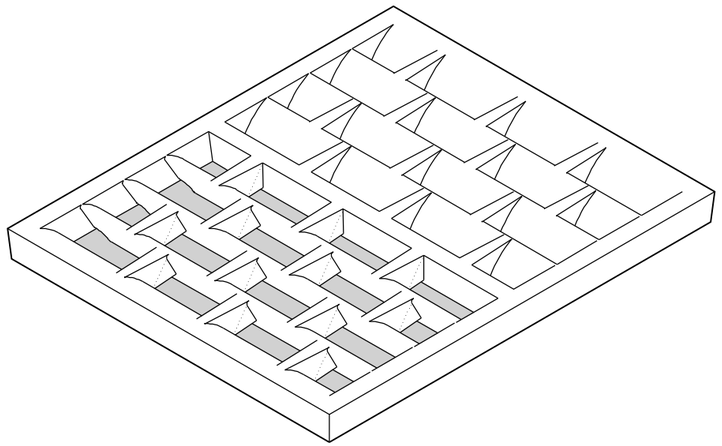

ISOMETRIC

MATTHEW J. WITECKI
STATE OF WASHINGTON
15588
REGISTERED
PROFESSIONAL ENGINEER

EXPIRES JULY 1, 2007

NOTE: THIS PLAN IS NOT A LEGAL ENGINEERING DOCUMENT BUT AN ELECTRONIC DUPLICATE. THE ORIGINAL, SIGNED BY THE ENGINEER AND APPROVED FOR PUBLICATION, IS KEPT ON FILE AT THE WASHINGTON STATE DEPARTMENT OF TRANSPORTATION. A COPY MAY BE OBTAINED UPON REQUEST.

RECTANGULAR BI-DIRECTIONAL VANED GRATE
STANDARD PLAN B-30.40-00

SHEET 1 OF 1 SHEET

APPROVED FOR PUBLICATION

Harold J. Peterfeso — STATE DESIGN ENGINEER — *06-01-06* — DATE

Washington State Department of Transportation

EFFECTIVE: APRIL 2, 2007 TO JANUARY 6, 2008

EFFECTIVE: APRIL 2, 2007 TO JANUARY 6, 2008

EFFECTIVE: APRIL 2, 2007 TO JANUARY 6, 2008

DRAWN BY: MARK SUJKA

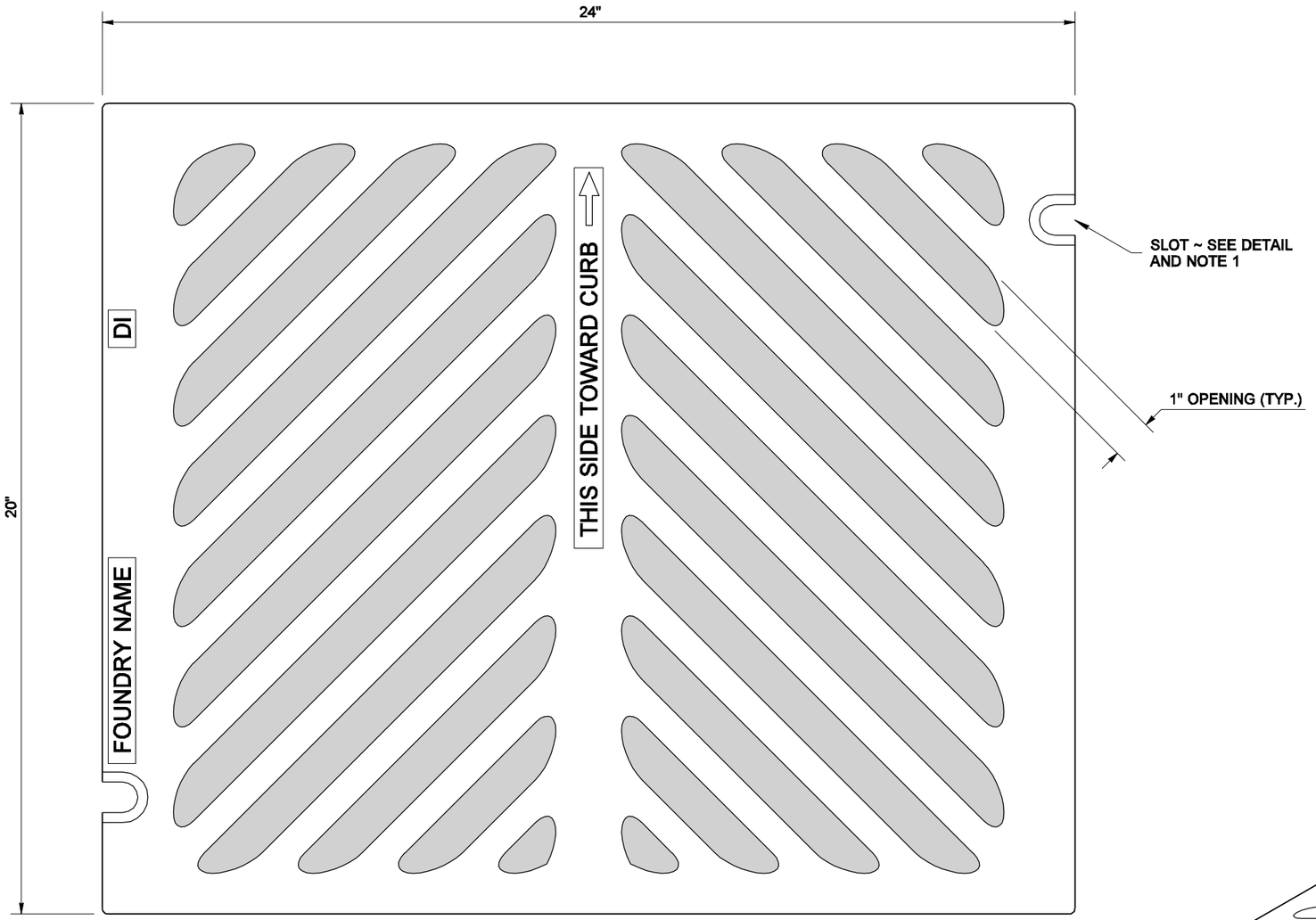

TOP

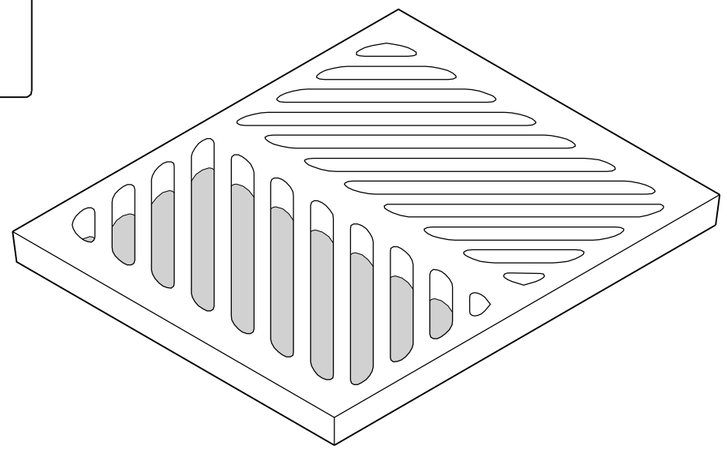

ISOMETRIC

NOTES

1. When bolt-down grates are specified in the Contract, provide two slots in the grate that are vertically aligned with the holes in the frame. Location of bolt-down slots varies among different manufacturers.
2. Refer to Standard Specification 9-05.15(2) for additional requirements.
3. For Frame details, see Standard Plan B-30.10.
4. The thickness of the grate shall not exceed 1 5/8".

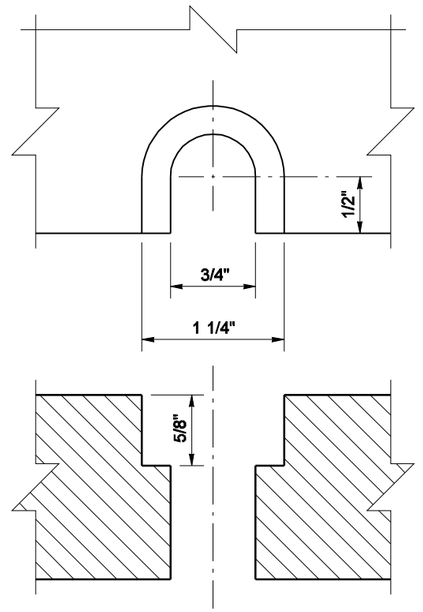

BOLT-DOWN SLOT DETAIL
SEE NOTE 1

MATTHEW J. WITECKI
STATE OF WASHINGTON
15588
REGISTERED
PROFESSIONAL ENGINEER

EXPIRES JULY 1, 2007

NOTE: THIS PLAN IS NOT A LEGAL ENGINEERING DOCUMENT BUT AN ELECTRONIC DUPLICATE. THE ORIGINAL, SIGNED BY THE ENGINEER AND APPROVED FOR PUBLICATION, IS KEPT ON FILE AT THE WASHINGTON STATE DEPARTMENT OF TRANSPORTATION. A COPY MAY BE OBTAINED UPON REQUEST.

RECTANGULAR HERRINGBONE GRATE

STANDARD PLAN B-30.50-00

SHEET 1 OF 1 SHEET

APPROVED FOR PUBLICATION

Harold J. Peterfeso — STATE DESIGN ENGINEER
06-01-06 — DATE

Washington State Department of Transportation

EFFECTIVE: APRIL 2, 2007 TO JANUARY 6, 2008

EFFECTIVE: APRIL 2, 2007 TO JANUARY 6, 2008

EFFECTIVE: APRIL 2, 2007 TO JANUARY 6, 2008

DRAWN BY: ELENA BRUNSTEIN

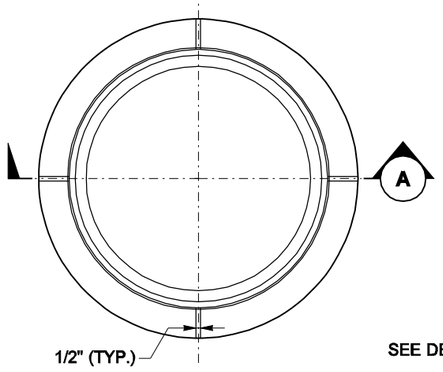

RING PLAN

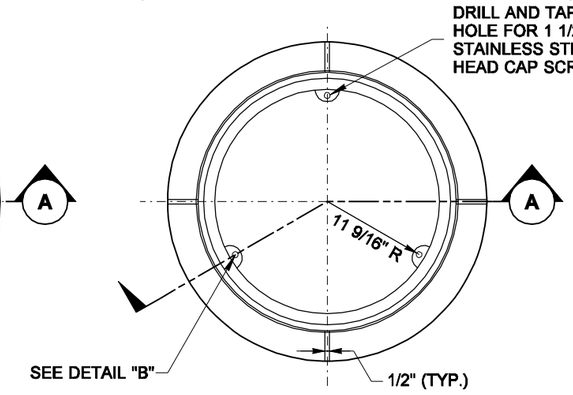

RING PLAN

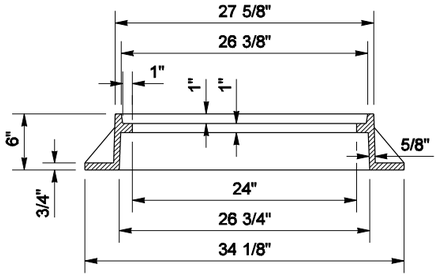

RING SECTION (A)

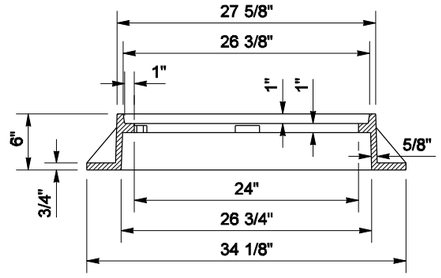

RING SECTION (A)

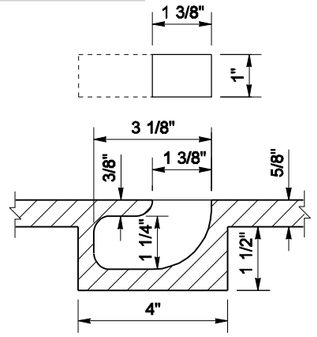

BLIND PICK NOTCH

DETAIL "A"

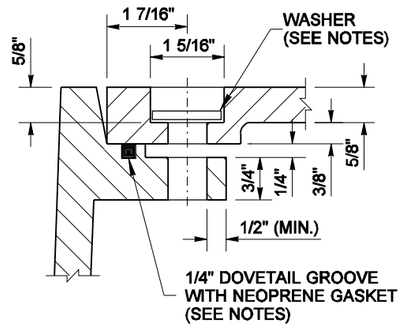

BOLT-DOWN / WATERTIGHT

DETAIL "B"

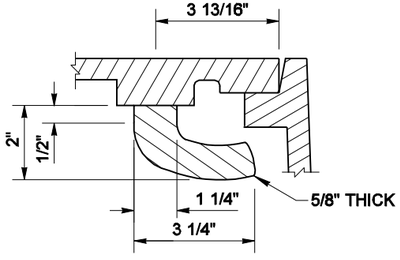

BOLT ON CAM TYPE LOCKING DEVICE

SECTION (C)

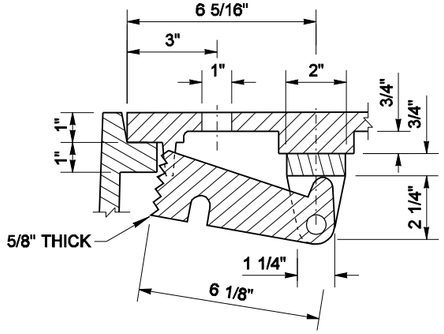

BOLT ON CAM TYPE LOCKING DEVICE

DETAIL "C"

NOTES

1. Gasket and groove may be in the seat or underside of cover.
2. For bolt down manhole ring and covers that are not designated "Watertight", the neoprene gasket, groove and washer are not required.
3. Washer shall be neoprene (Detail "B").
4. In lieu of blind pick notch for storm sewer manhole covers, drill three 1" diameter holes at 120° spacing.
5. Proprietary manhole covers without bottom ribs are acceptable.
6. For clarity, the vertical scale of the Cover Section has been exaggerated, it is 1.5 times the horizontal scale (1H:1.5V).

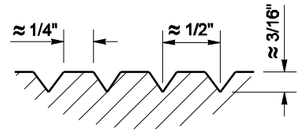

SKID GROOVE PATTERN DETAIL

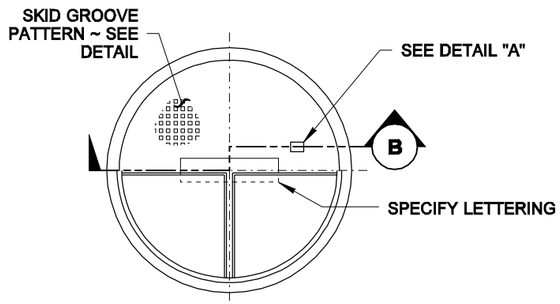

COVER PLAN

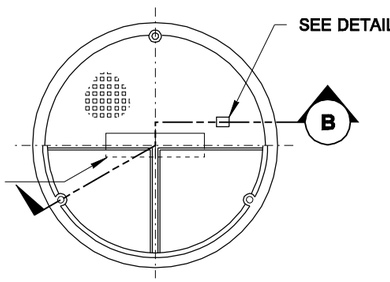

COVER PLAN

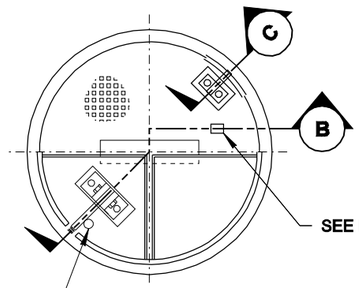

COVER PLAN

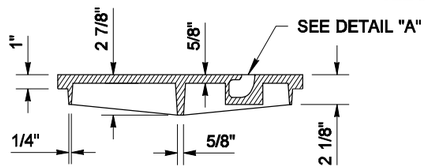

COVER SECTION (B)

(SEE NOTE 6)

STANDARD

TYPE 1

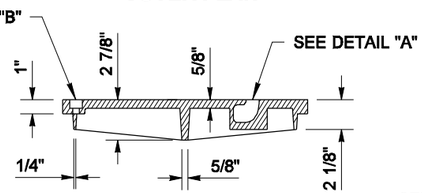

COVER SECTION (B)

(SEE NOTE 6)

BOLT-DOWN / WATERTIGHT

TYPE 2

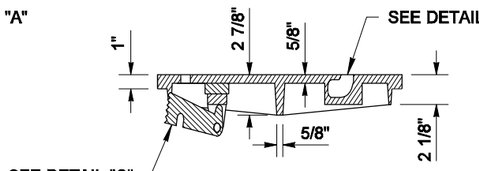

COVER SECTION (B)

(SEE NOTE 6)

CAMLOCK

TYPE 3

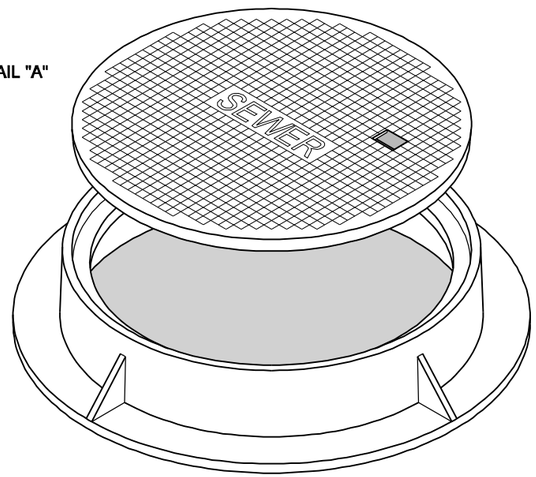

ISOMETRIC VIEW

MATTHEW J. WITECKI
STATE OF WASHINGTON
15588
REGISTERED
PROFESSIONAL ENGINEER

EXPIRES JULY 1, 2007

NOTE: THIS PLAN IS NOT A LEGAL ENGINEERING DOCUMENT BUT AN ELECTRONIC DUPLICATE. THE ORIGINAL, SIGNED BY THE ENGINEER AND APPROVED FOR PUBLICATION, IS KEPT ON FILE AT THE WASHINGTON STATE DEPARTMENT OF TRANSPORTATION. A COPY MAY BE OBTAINED UPON REQUEST.

CIRCULAR FRAME (RING) AND COVER

STANDARD PLAN B-30.70-00

SHEET 1 OF 1 SHEET

APPROVED FOR PUBLICATION

Harold J. Peterfeso — *06-01-06*

STATE DESIGN ENGINEER — DATE

Washington State Department of Transportation

EFFECTIVE: APRIL 2, 2007 TO JANUARY 6, 2008

EFFECTIVE: APRIL 2, 2007 TO JANUARY 6, 2008

EFFECTIVE: APRIL 2, 2007 TO JANUARY 6, 2008

DRAWN BY: ADAM COCHRAN

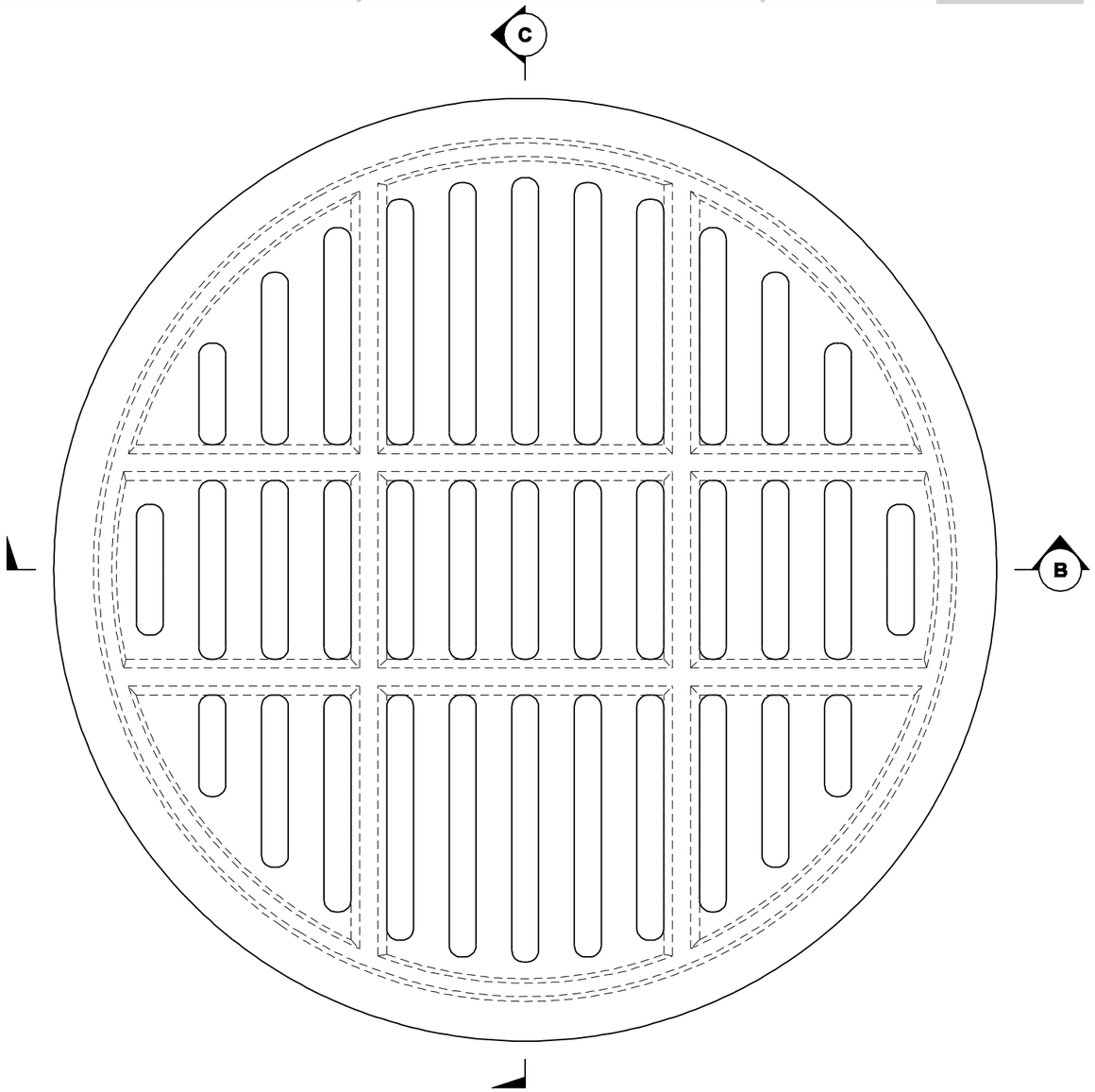

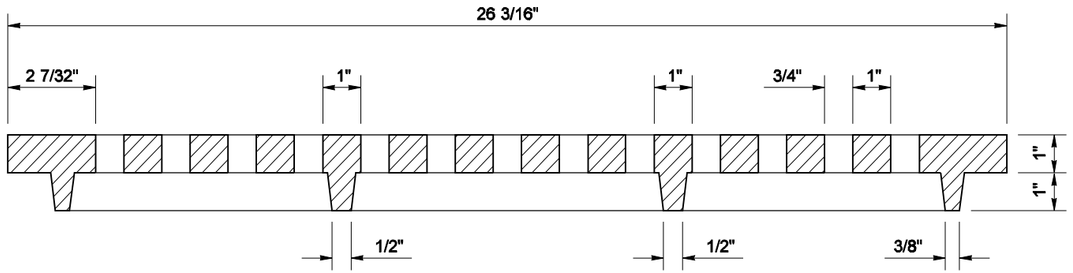

SECTION (B)

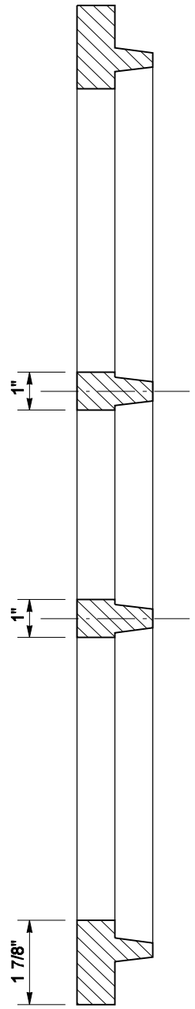

SECTION (C)

NOTES

1. For use with Circular Frames (rings) detailed in Standard Plan B-30.70.
2. Slotted Manhole Covers are intended for use with Drywells only. See Standard Plans B-20.20 and B-20.60.

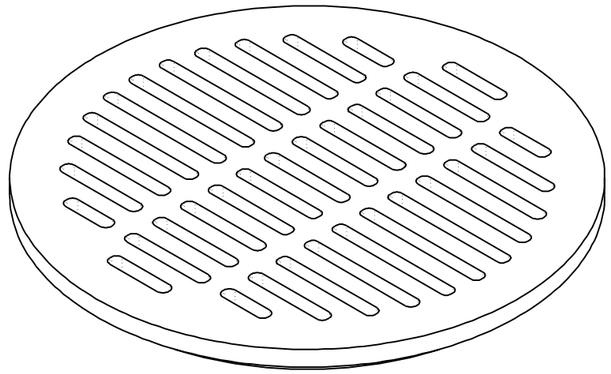

ISOMETRIC VIEW



EXPIRES JULY 1, 2007

NOTE: THIS PLAN IS NOT A LEGAL ENGINEERING DOCUMENT BUT AN ELECTRONIC DUPLICATE. THE ORIGINAL, SIGNED BY THE ENGINEER AND APPROVED FOR PUBLICATION, IS KEPT ON FILE AT THE WASHINGTON STATE DEPARTMENT OF TRANSPORTATION. A COPY MAY BE OBTAINED UPON REQUEST.

CIRCULAR GRATE

STANDARD PLAN B-30.80-00

SHEET 1 OF 1 SHEET

APPROVED FOR PUBLICATION

Harold J. Peterfeso — STATE DESIGN ENGINEER — *06-08-06* — DATE

Washington State Department of Transportation

EFFECTIVE: APRIL 2, 2007 TO JANUARY 6, 2008

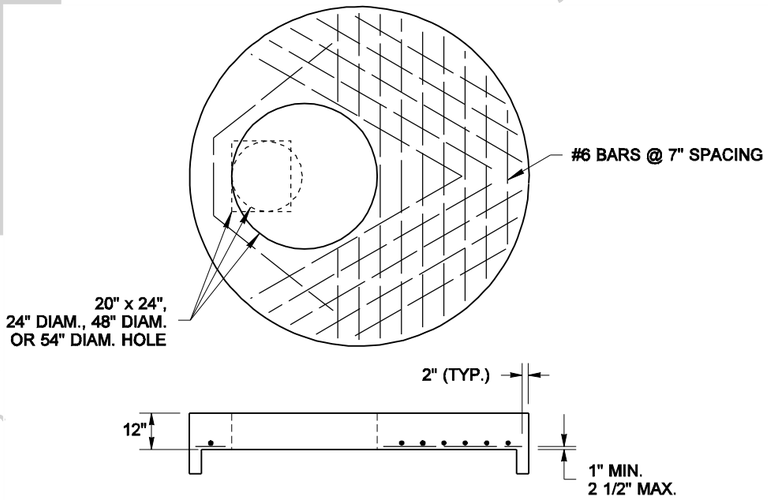

84" or 96" FLAT SLAB TOP

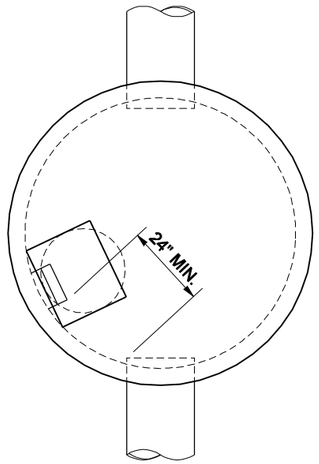

TYPICAL ORIENTATION FOR ACCESS AND STEPS

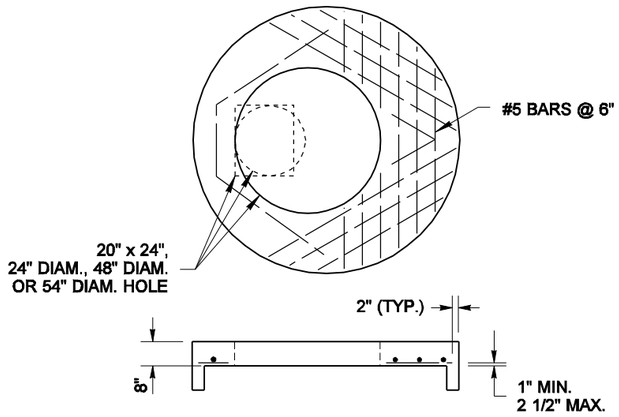

72" FLAT SLAB TOP

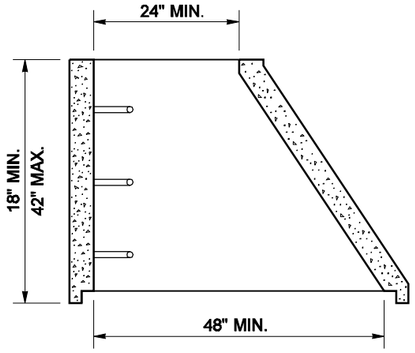

ECCENTRIC CONE SECTION

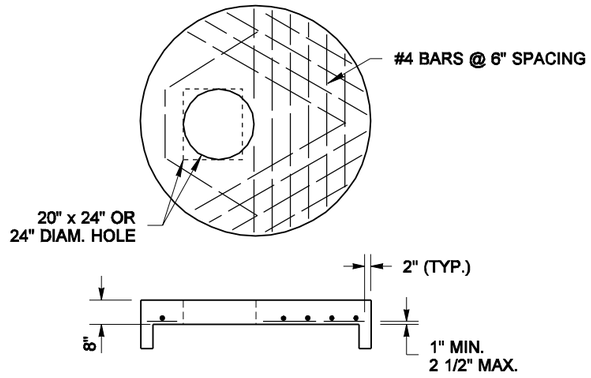

48", 54", or 60" FLAT SLAB TOP

EFFECTIVE: APRIL 2, 2007 TO JANUARY 6, 2008

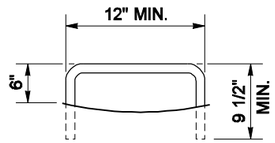

STEP

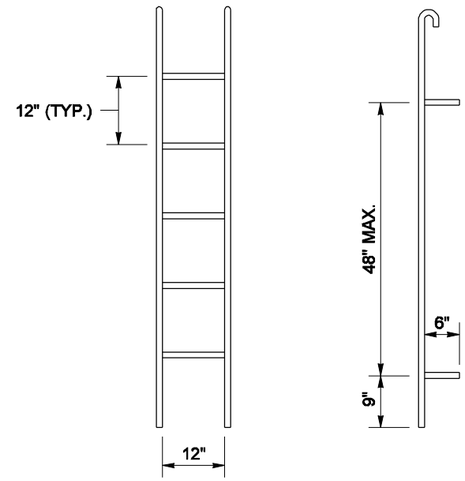

PREFABRICATED LADDER

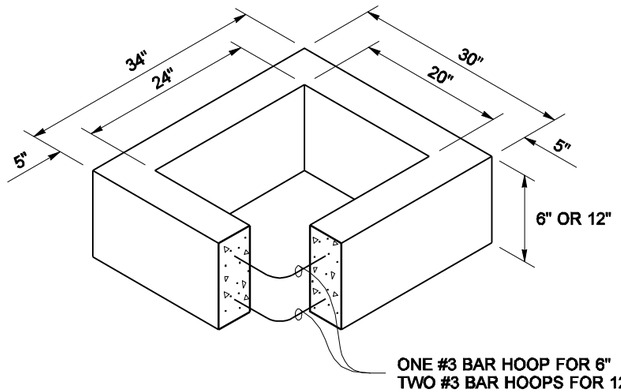

RECTANGULAR ADJUSTMENT SECTION

1 As an acceptable alternative to rebar, wire mesh having a minimum area of 0.12 square inches per foot may be used for adjustment sections.

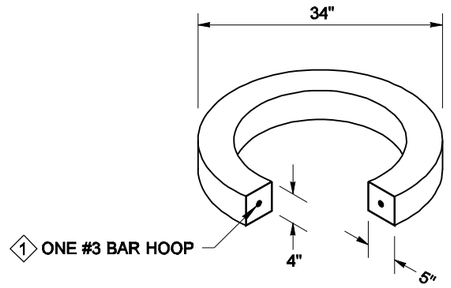

CIRCULAR ADJUSTMENT SECTION

MATTHEW J. WITECKI
STATE OF WASHINGTON
15588
REGISTERED
PROFESSIONAL ENGINEER

EXPIRES JULY 1, 2007

NOTE: THIS PLAN IS NOT A LEGAL ENGINEERING DOCUMENT BUT AN ELECTRONIC DUPLICATE. THE ORIGINAL, SIGNED BY THE ENGINEER AND APPROVED FOR PUBLICATION, IS KEPT ON FILE AT THE WASHINGTON STATE DEPARTMENT OF TRANSPORTATION. A COPY MAY BE OBTAINED UPON REQUEST.

MISCELLANEOUS DETAILS FOR DRAINAGE STRUCTURES STANDARD PLAN B-30.90-00

SHEET 1 OF 1 SHEET

APPROVED FOR PUBLICATION

Harold J. Peterfeso — STATE DESIGN ENGINEER

06-08-06 — DATE

Washington State Department of Transportation

EFFECTIVE: APRIL 2, 2007 TO JANUARY 6, 2008

EFFECTIVE: APRIL 2, 2007 TO JANUARY 6, 2008

DRAWN BY: MARK SUJKA

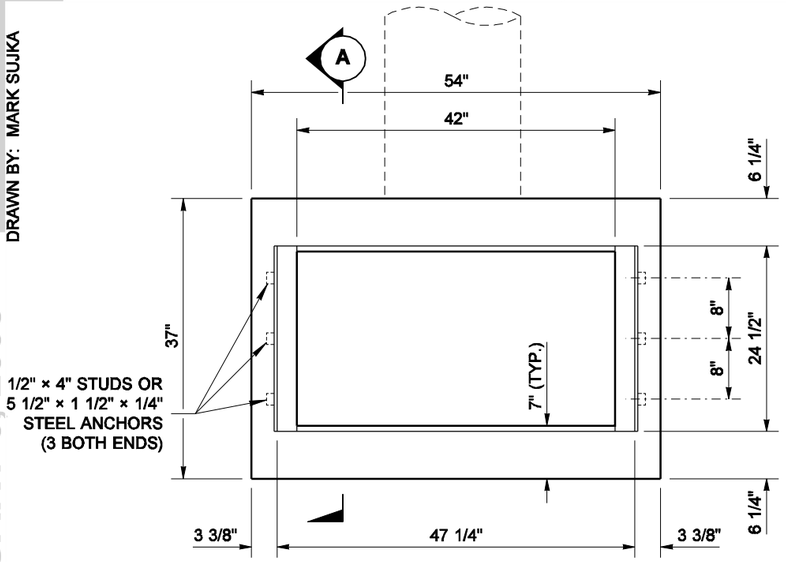

TOP VIEW

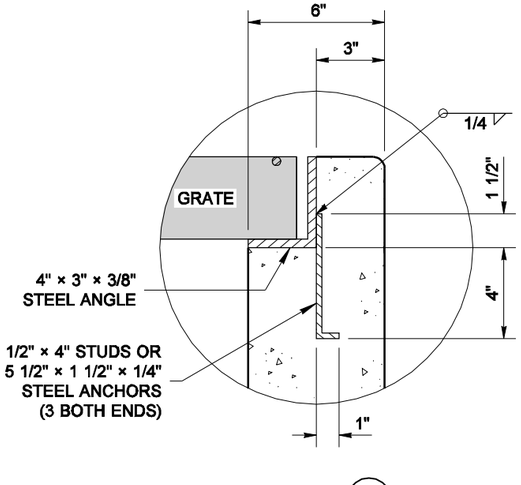

DETAIL B

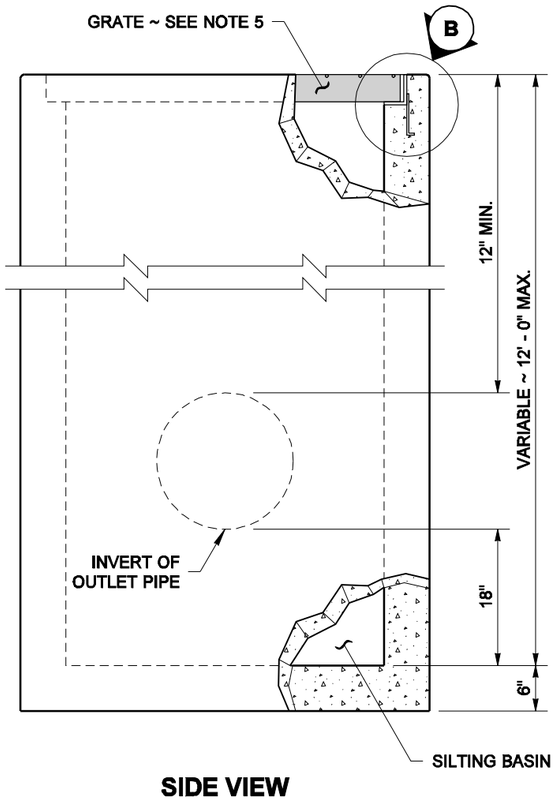

SIDE VIEW

NOTES

1. The Steel Angles shall be set so that each bearing bar of prefabricated grate shall have full bearing on both ends. The finished top of concrete shall be even with the grate surface.
2. All exposed concrete shall be finished with a 1/2" radius.
3. The grade line of the top inside of any pipe shall enter no lower than the grade line of the top inside of the outlet pipe.
4. Pipes may enter through the knockouts on any side at any reasonable angle, provided the outside of the pipe can be contained between two opposite walls.
5. See contract for type of grate specified. See Standard Plan B-40.20 and B-40.40 for grate details.

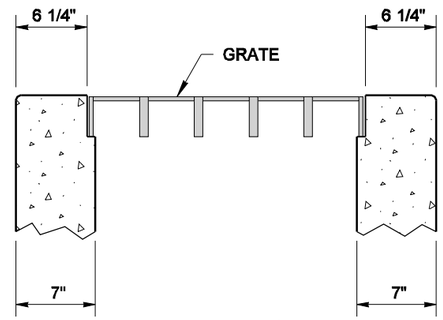

SECTION A

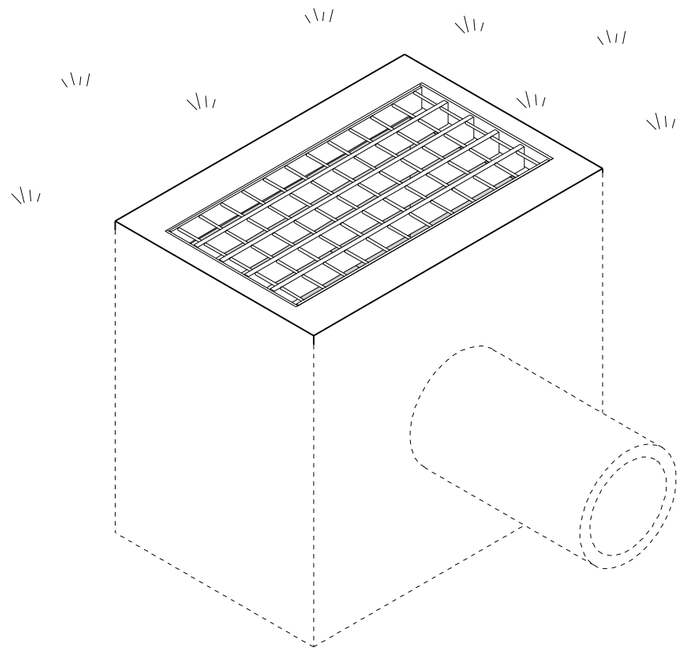

ISOMETRIC VIEW



EXPIRES JULY 1, 2007

NOTE: THIS PLAN IS NOT A LEGAL ENGINEERING DOCUMENT BUT AN ELECTRONIC DUPLICATE. THE ORIGINAL, SIGNED BY THE ENGINEER, AND APPROVED FOR PUBLICATION, IS KEPT ON FILE AT THE WASHINGTON STATE DEPARTMENT OF TRANSPORTATION. A COPY MAY BE OBTAINED UPON REQUEST.

GRATE INLET TYPE 1 (CAST-IN-PLACE)

STANDARD PLAN B-35.20-00

SHEET 1 OF 1 SHEET

APPROVED FOR PUBLICATION

Harold J. Peterfeso — STATE DESIGN ENGINEER

06-08-06 — DATE

Washington State Department of Transportation

EFFECTIVE: APRIL 2, 2007 TO JANUARY 6, 2008

EFFECTIVE: APRIL 2, 2007 TO JANUARY 6, 2008

DRAWN BY: ADAM COCHRAN

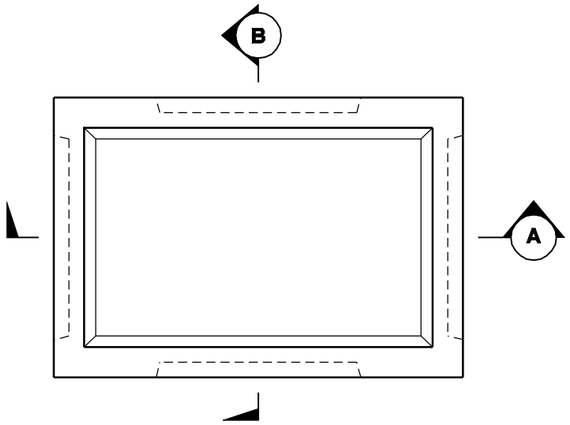

TOP VIEW

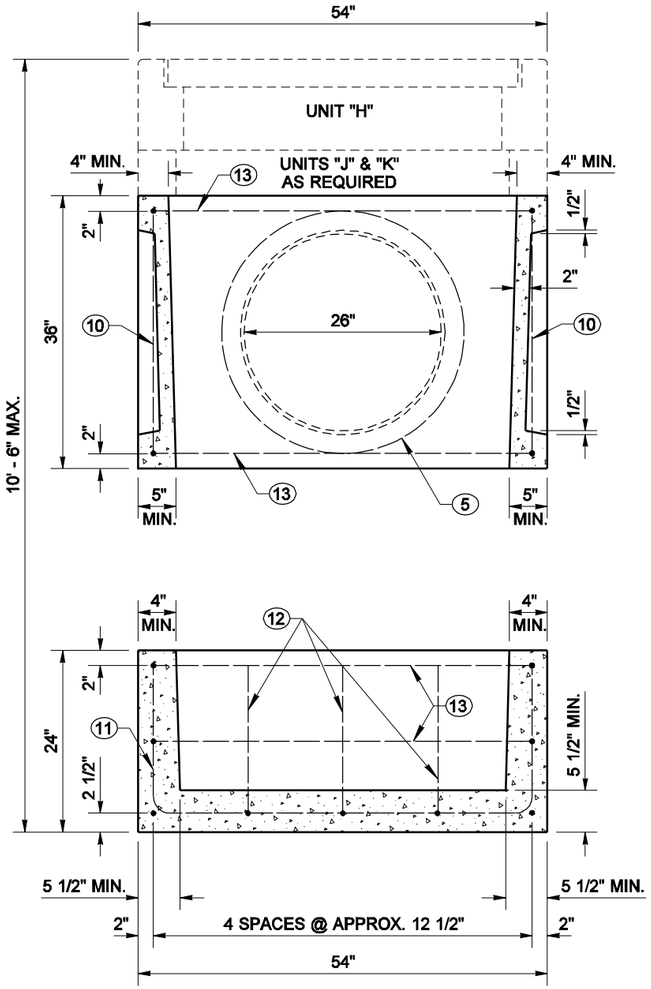

SECTION (A) TWO PIECE BASE

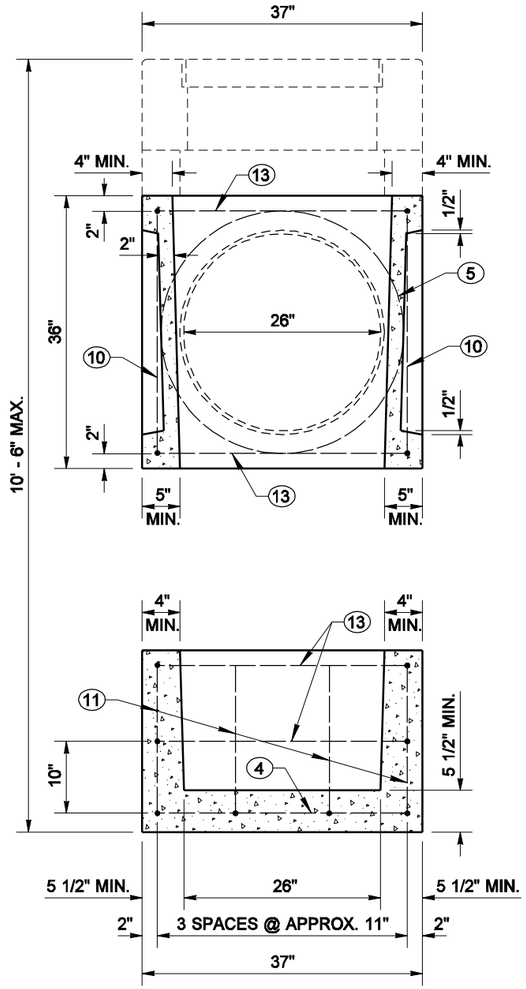

SECTION (B) TWO PIECE BASE

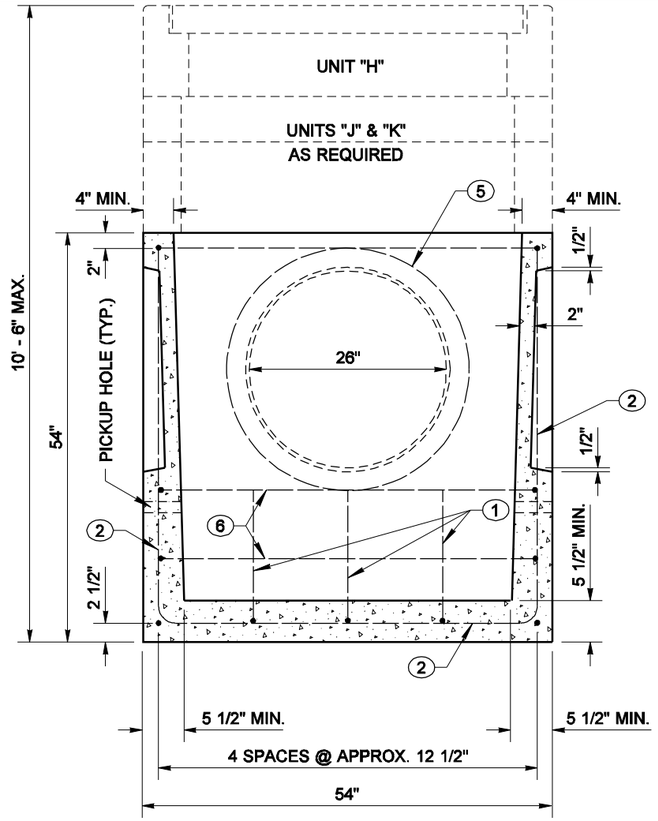

SECTION (A) ONE PIECE BASE

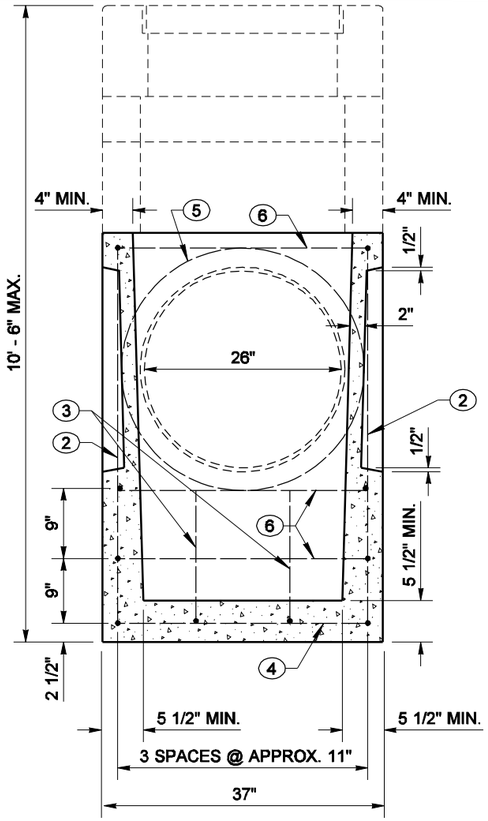

SECTION (B) ONE PIECE BASE

PIPE ALLOWANCES	
PIPE MATERIAL	**MAXIMUM INSIDE DIAMETER**
REINFORCED OR PLAIN CONCRETE	18"
ALL METAL PIPE	21"
CPSSP * (STD. SPEC. 9-05.20)	18"
SOLID WALL PVC (STD. SPEC. 9-05.12(1))	21"
PROFILE WALL PVC (STD. SPEC. 9-05.12(2))	21"

* CORRUGATED POLYETHYLENE STORM SEWER PIPE

MATTHEW J. WITECKI
STATE OF WASHINGTON
15588
REGISTERED
PROFESSIONAL ENGINEER

EXPIRES JULY 1, 2007

NOTE: THIS PLAN IS NOT A LEGAL ENGINEERING DOCUMENT BUT AN ELECTRONIC DUPLICATE. THE ORIGINAL, SIGNED BY THE ENGINEER AND APPROVED FOR PUBLICATION, IS KEPT ON FILE AT THE WASHINGTON STATE DEPARTMENT OF TRANSPORTATION. A COPY MAY BE OBTAINED UPON REQUEST.

GRATE INLET TYPE 2

STANDARD PLAN B-35.40-00

SHEET 1 OF 2 SHEETS

APPROVED FOR PUBLICATION

Harold J. Peterfeso — STATE DESIGN ENGINEER — *06-08-06* — DATE

Washington State Department of Transportation

EFFECTIVE: APRIL 2, 2007 TO JANUARY 6, 2008

EFFECTIVE: APRIL 2, 2007 TO JANUARY 6, 2008

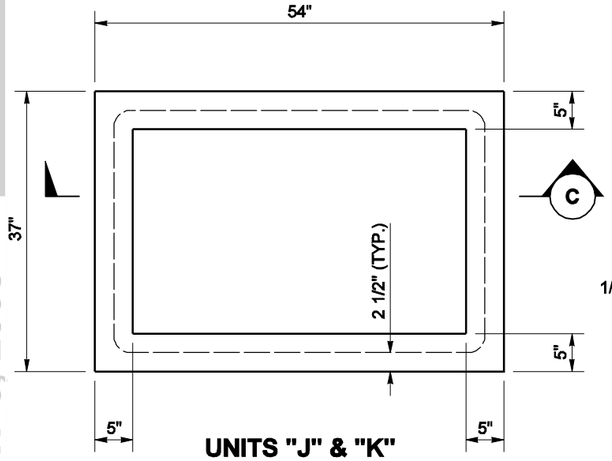

UNITS "J" & "K"

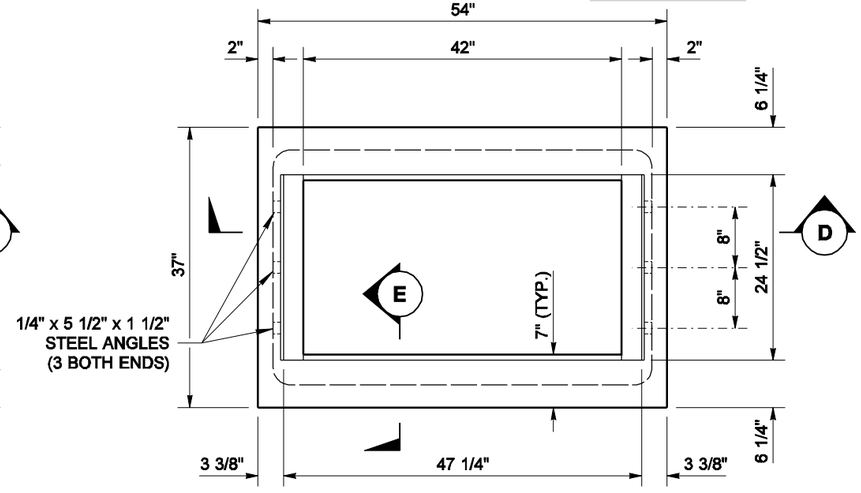

UNIT "H"

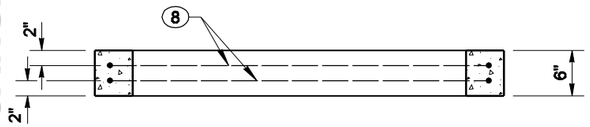

SECTION (C) UNIT "J"

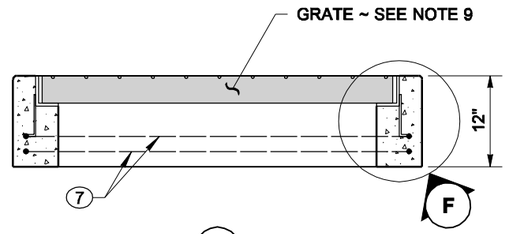

SECTION (D) UNIT "H"

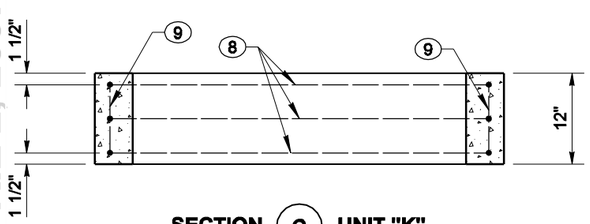

SECTION (C) UNIT "K"

BAR LIST

MARK	LOCATION	QTY.	SIZE	LENGTH	DESCRIPTION
①	BOTTOM SLAB AND SIDE WALL	3	3	5' - 9"	
②	BOTTOM SLAB AND SIDE WALL	2		12' - 5"	
③	BOTTOM SLAB AND SIDE WALL	2		7' - 2"	
④	BOTTOM SLAB AND SIDE WALL	2		2' - 9"	STRAIGHT
⑤	WALL	4		9' - 1"	HOOP
⑥	SIDE WALL	3		14' - 6"	HOOP
⑦	UNIT H	2		14' - 2"	HOOP
⑧	UNIT J	2		14' - 2"	HOOP
⑧	UNIT K	3		14' - 2"	HOOP
⑨	UNIT K	4		0' - 9"	STRAIGHT
⑩	SIDE WALL	8		2' - 8"	STRAIGHT
⑪	BOTTOM SLAB AND SIDE WALL	4		7' - 5"	
⑫	BOTTOM SLAB AND SIDE WALL	3		6' - 0"	
⑬	SIDE WALL	4		14' - 6"	HOOP

BENDING DIAGRAM

(ALL DIMENSIONS ARE OUT TO OUT)

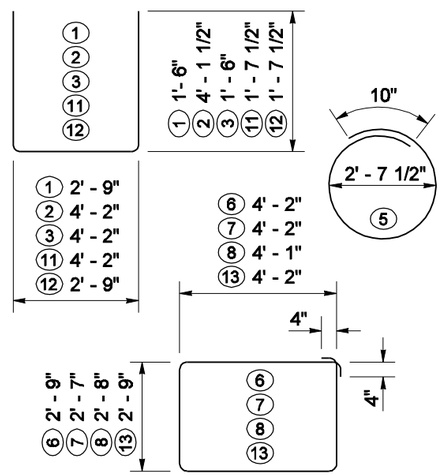

NOTES

1. The Steel Angles shall be set so that each bearing bar of prefabricated grate shall have full bearing on both ends. The finished top of concrete shall be even with the grate surface.
2. Top of inlet grate shall be placed at ground level to present an unobstructed ditch or median section.
3. All exposed concrete edges shall be finished with a 1/2" radius.
4. Pipes may enter through the knockouts on any side at any reasonable angle, provided the outside of the pipe can be contained between two opposite walls.
5. The flow line of the outlet pipe shall be 18" minimum above the inside bottom of the inlet structure.
6. The grade line of the top inside of any inlet pipe shall enter no lower than the grade line of the top inside of the outlet pipe.
7. Unit "H" and optional extension units "J" and "K" shall be grouted in place to the satisfaction of the Engineer.
8. All pickup holes shall be grouted full after the basin has been placed.
9. See contract for type of grate specified. See Standard Plan B-40.20 and B-40.40 for grate details.

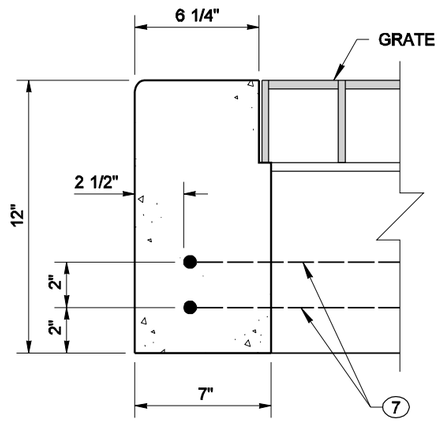

SECTION (E) UNIT "H"

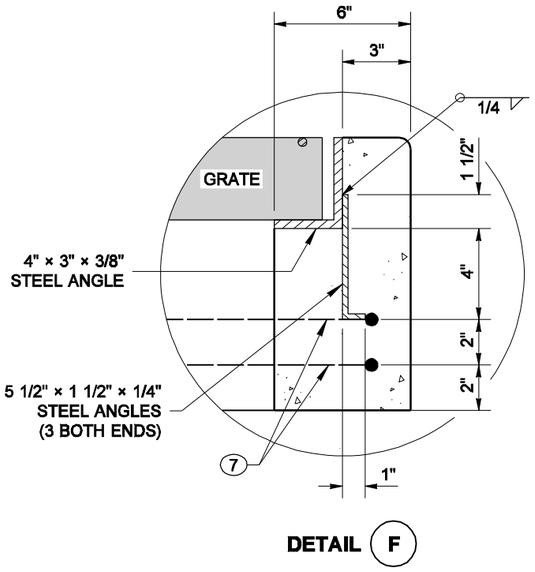

DETAIL (F)

MATTHEW J. WITECKI
STATE OF WASHINGTON
15588
REGISTERED
PROFESSIONAL ENGINEER

EXPIRES JULY 1, 2007

NOTE: THIS PLAN IS NOT A LEGAL ENGINEERING DOCUMENT BUT AN ELECTRONIC DUPLICATE. THE ORIGINAL, SIGNED BY THE ENGINEER AND APPROVED FOR PUBLICATION, IS KEPT ON FILE AT THE WASHINGTON STATE DEPARTMENT OF TRANSPORTATION. A COPY MAY BE OBTAINED UPON REQUEST.

GRATE INLET TYPE 2

STANDARD PLAN B-35.40-00

SHEET 2 OF 2 SHEETS

APPROVED FOR PUBLICATION

Harold J. Peterfeso — STATE DESIGN ENGINEER — *06-08-06* — DATE

Washington State Department of Transportation

EFFECTIVE: APRIL 2, 2007 TO JANUARY 6, 2008

EFFECTIVE: APRIL 2, 2007 TO JANUARY 6, 2008

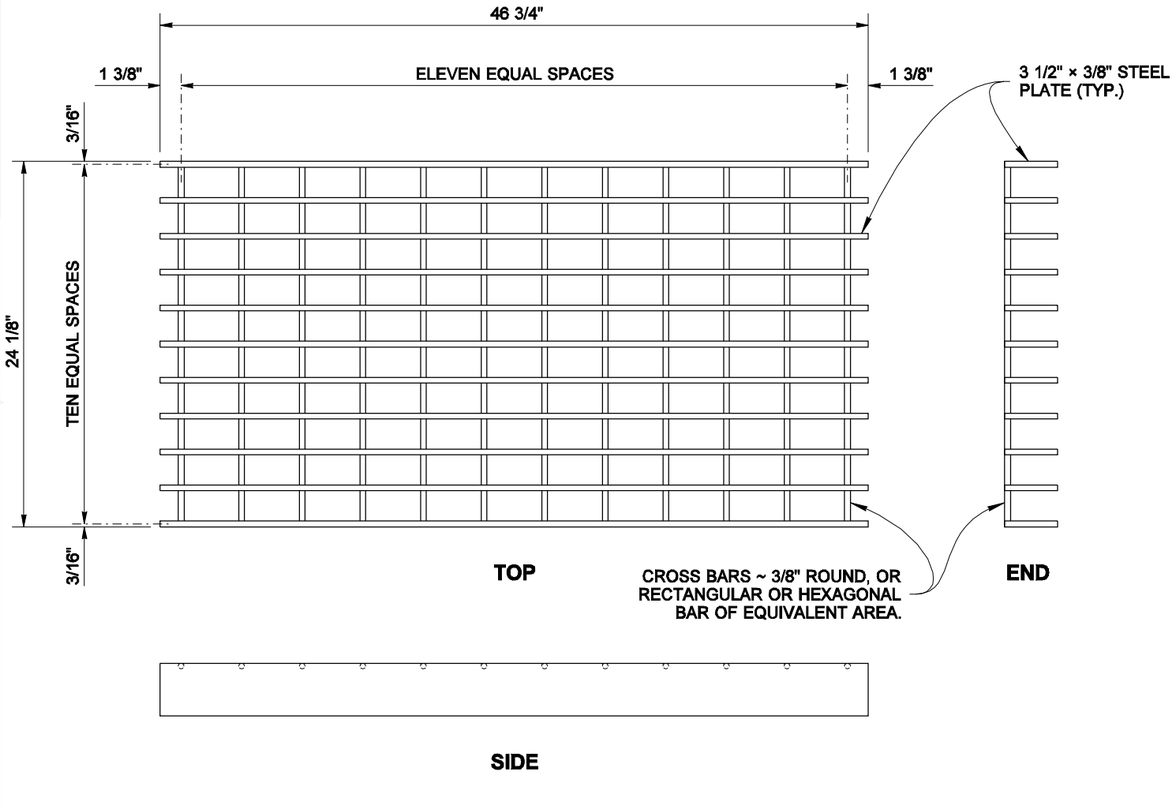

GRATE "A"
(APPROXIMATE WEIGHT 215 LBS)

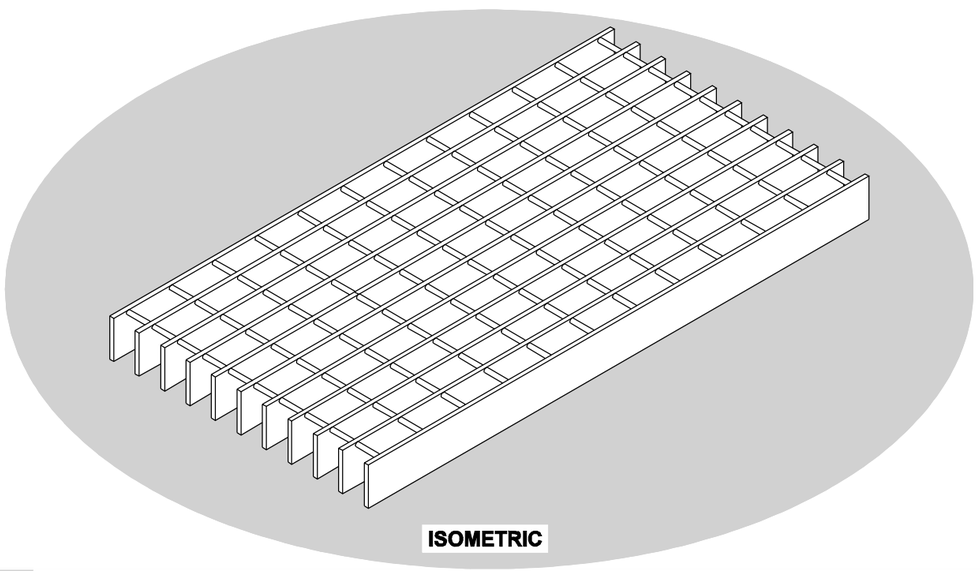

ISOMETRIC

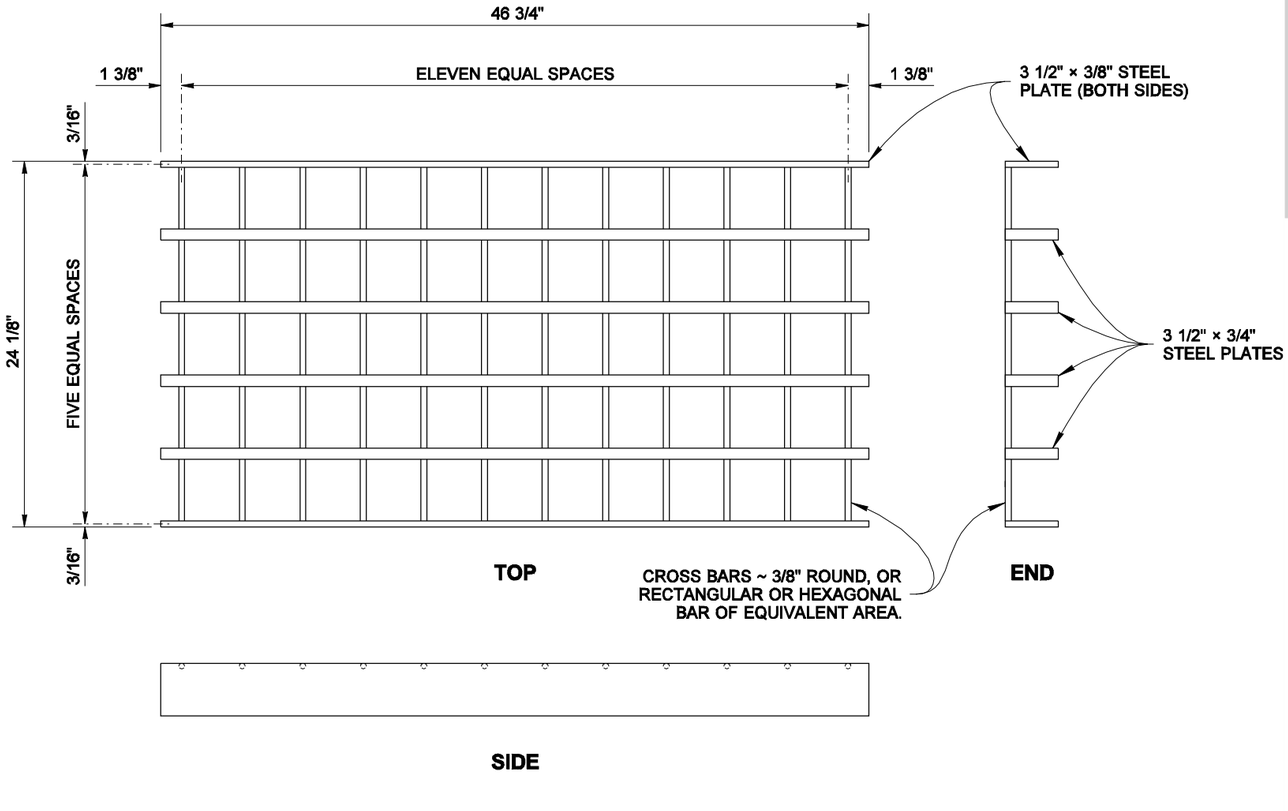

GRATE "B"
(APPROXIMATE WEIGHT 215 LBS)

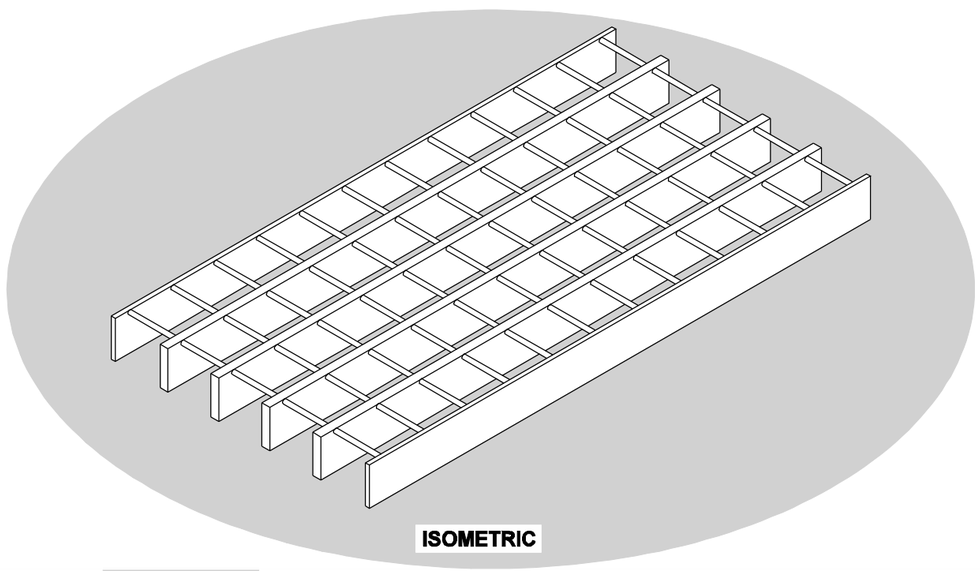

ISOMETRIC

DRAWN BY: MARK SUJKA

MATTHEW J. WITECKI
STATE OF WASHINGTON
15588
REGISTERED
PROFESSIONAL ENGINEER

EXPIRES JULY 1, 2007

NOTE: THIS PLAN IS NOT A LEGAL ENGINEERING DOCUMENT BUT AN ELECTRONIC DUPLICATE. THE ORIGINAL, SIGNED BY THE ENGINEER AND APPROVED FOR PUBLICATION, IS KEPT ON FILE AT THE WASHINGTON STATE DEPARTMENT OF TRANSPORTATION. A COPY MAY BE OBTAINED UPON REQUEST.

WELDED GRATES FOR GRATE INLET

STANDARD PLAN B-40.20-00

SHEET 1 OF 1 SHEET

APPROVED FOR PUBLICATION

Harold J. Peterfeso — STATE DESIGN ENGINEER — *06-01-06* — DATE

Washington State Department of Transportation

EFFECTIVE: APRIL 2, 2007 TO JANUARY 6, 2008

EFFECTIVE: APRIL 2, 2007 TO JANUARY 6, 2008

EFFECTIVE: APRIL 2, 2007 TO JANUARY 6, 2008

EFFECTIVE: APRIL 2, 2007 TO JANUARY 6, 2008

DRAWN BY: MARK SUJKA

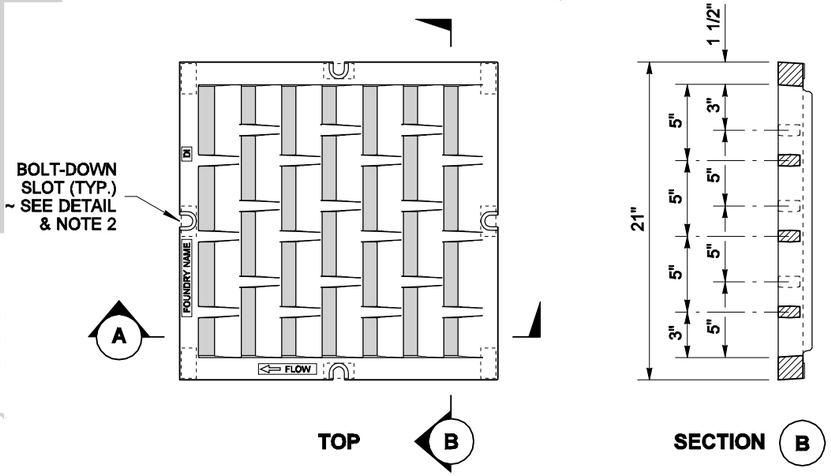

GRATE

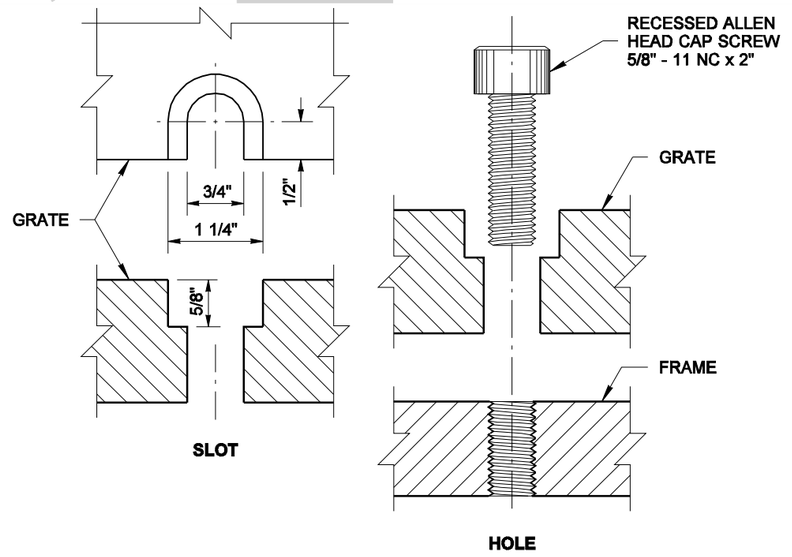

BOLT-DOWN DETAILS
SEE NOTE 2

NOTES

1. The Contract may specify a rotated inlet installation. Orient the Grates in the Frame so they intercept flow.
2. When bolt-down grates are specified in the Contract, provide two slots in the grate that are centered with the holes in the frame. Location of bolt-down slots varies among different manufacturers.
3. Refer to Standard Specification 9-05.15(2) for additional requirements.

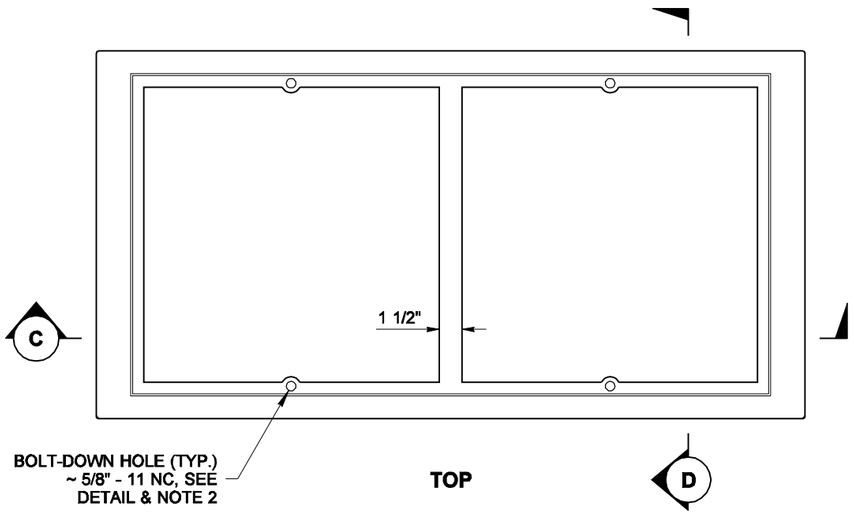

FRAME

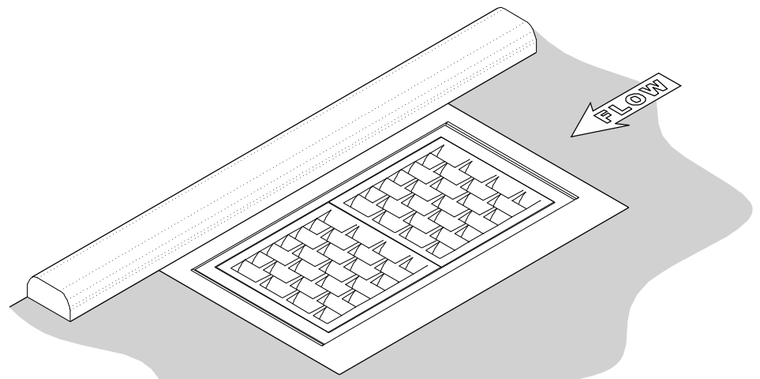

NORMAL INSTALLATION

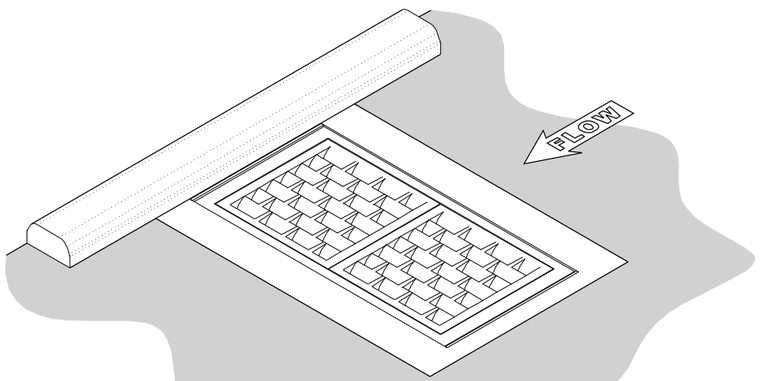

ROTATED INSTALLATION

ISOMETRIC VIEWS
SEE NOTE 1

MATTHEW J. WITECKI
STATE OF WASHINGTON
15588
REGISTERED
PROFESSIONAL ENGINEER

EXPIRES JULY 1, 2007

NOTE: THIS PLAN IS NOT A LEGAL ENGINEERING DOCUMENT BUT AN ELECTRONIC DUPLICATE. THE ORIGINAL, SIGNED BY THE ENGINEER AND APPROVED FOR PUBLICATION, IS KEPT ON FILE AT THE WASHINGTON STATE DEPARTMENT OF TRANSPORTATION. A COPY MAY BE OBTAINED UPON REQUEST.

FRAME AND DUAL VANED GRATES FOR GRATE INLET STANDARD PLAN B-40.40-00

SHEET 1 OF 1 SHEET

APPROVED FOR PUBLICATION

Harold J. Peterfeso — STATE DESIGN ENGINEER — *06-01-06* — DATE

Washington State Department of Transportation

EFFECTIVE: APRIL 2, 2007 TO JANUARY 6, 2008

EFFECTIVE: APRIL 2, 2007 TO JANUARY 6, 2008

EFFECTIVE: APRIL 2, 2007 TO JANUARY 6, 2008

DRAWN BY: MARK SUJKA

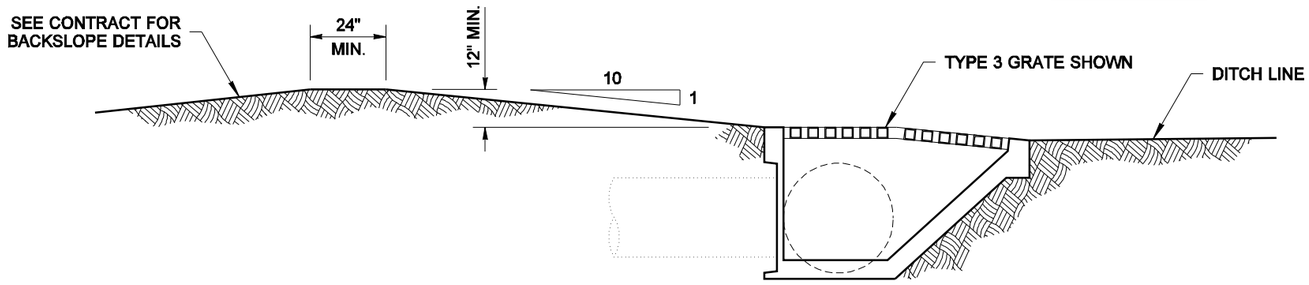

SECTION ON DITCH LINE

DIKE INSTALLATION FOR PREFERRED SLOPE

NOTES

1. The top of the inlet shall be placed at ground level to present an unobstructed ditch or median section.
2. Bevel or round exposed concrete edges 1/2".
3. Pipes may enter through the knockouts at any reasonable angle provided the outside of the pipe can be contained within the knockout provided.
4. The grade line of the lowest inlet pipe shall enter the structure at an elevation equal to or higher than the grade line of the outlet pipe.
5. All pickup holes shall be grouted full after the inlet has been placed.
6. The steel angles shall be set so that each bearing bar of the grate shall have full seating on both ends. The finished top of concrete shall be even with the grate surface. For grates, see Standard Plan B-50-20.
7. The amount, type, and grade of reinforcing steel is the responsibility of the manufacturer.
8. The inside wall taper for form removal shall not result in any wall section thinner than 6" except in pipe knockout areas.
9. Precast inlets shall be marked with the manufacturer's identification on the inside of the structure in some readily accessible location.

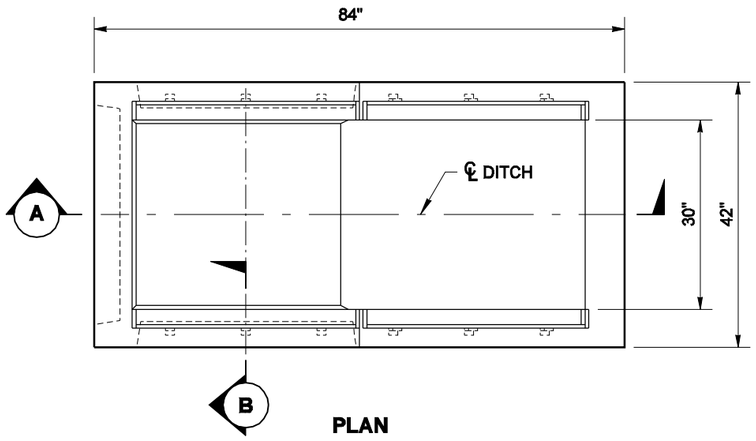

PLAN

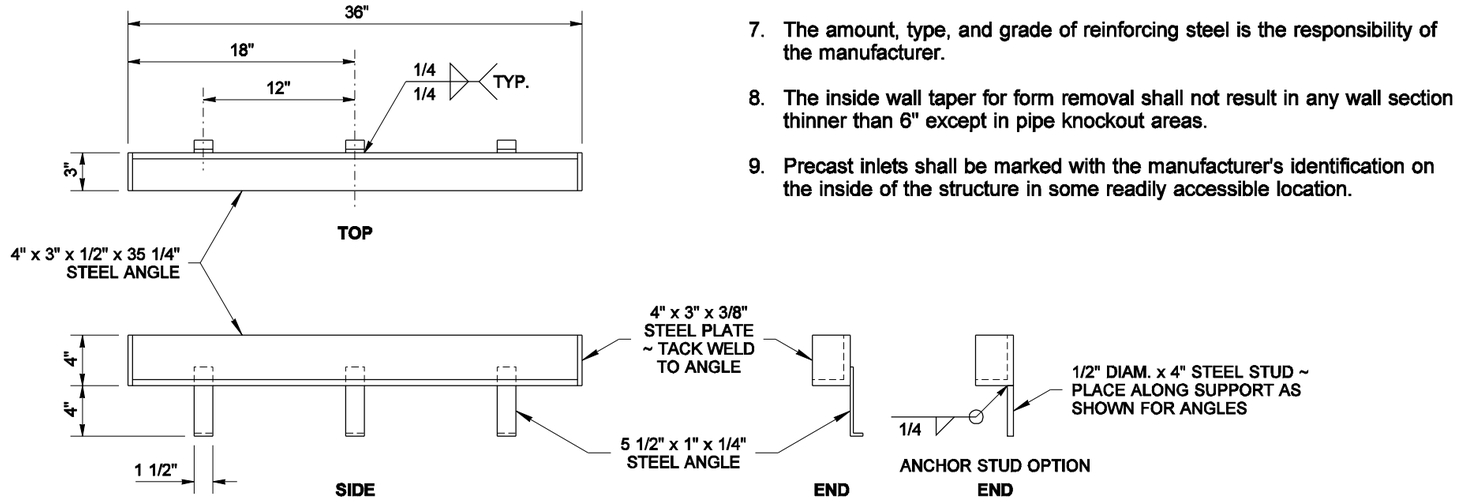

GRATE SUPPORT DETAIL
(FOUR SUPPORTS REQUIRED)

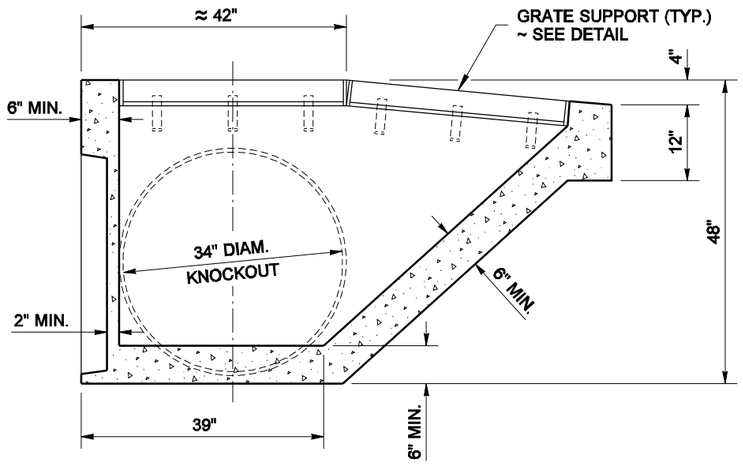

SECTION (A)

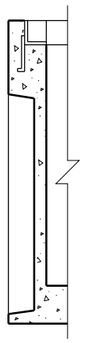

SECTION (B)

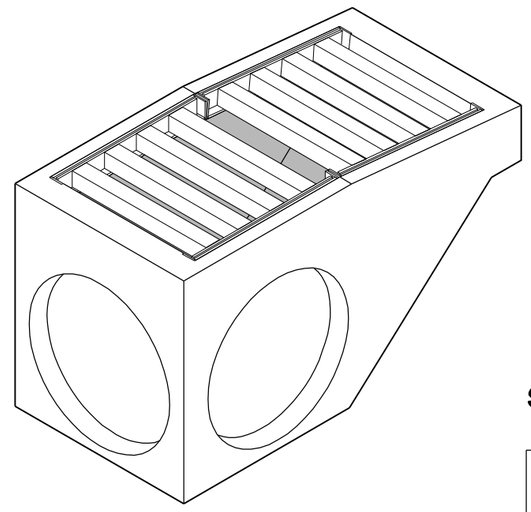

ISOMETRIC
(SHOWN WITH TYPE 1 GRATE)

MATTHEW J. WITECKI
STATE OF WASHINGTON
15588
REGISTERED
PROFESSIONAL ENGINEER

EXPIRES JULY 1, 2007

NOTE: THIS PLAN IS NOT A LEGAL ENGINEERING DOCUMENT BUT AN ELECTRONIC DUPLICATE. THE ORIGINAL, SIGNED BY THE ENGINEER AND APPROVED FOR PUBLICATION, IS KEPT ON FILE AT THE WASHINGTON STATE DEPARTMENT OF TRANSPORTATION. A COPY MAY BE OBTAINED UPON REQUEST.

DROP INLET TYPE 1

STANDARD PLAN B-45.20-00

SHEET 1 OF 1 SHEET

APPROVED FOR PUBLICATION

Harold J. Peterfeso — STATE DESIGN ENGINEER — *06-01-06* — DATE

Washington State Department of Transportation

EFFECTIVE: APRIL 2, 2007 TO JANUARY 6, 2008

EFFECTIVE: APRIL 2, 2007 TO JANUARY 6, 2008

EFFECTIVE: APRIL 2, 2007 TO JANUARY 6, 2008

DRAWN BY: MARK SUJKA

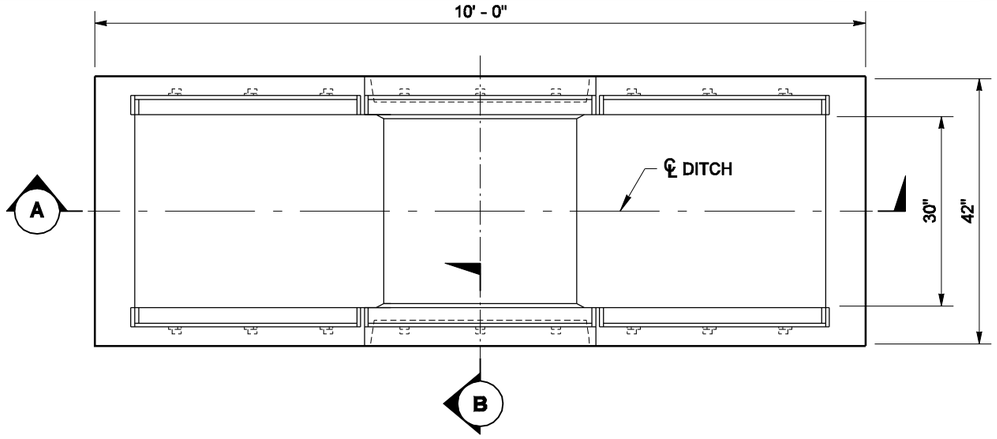

PLAN

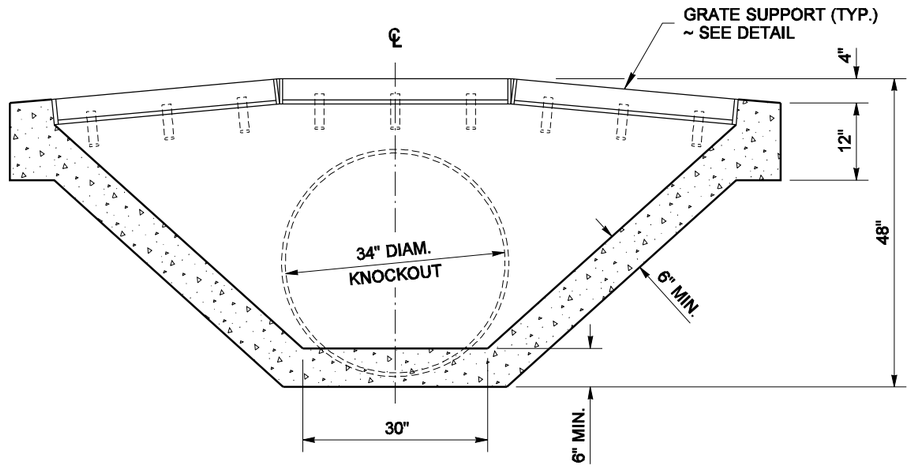

SECTION (A)

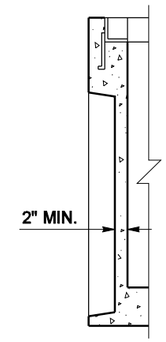

SECTION (B)

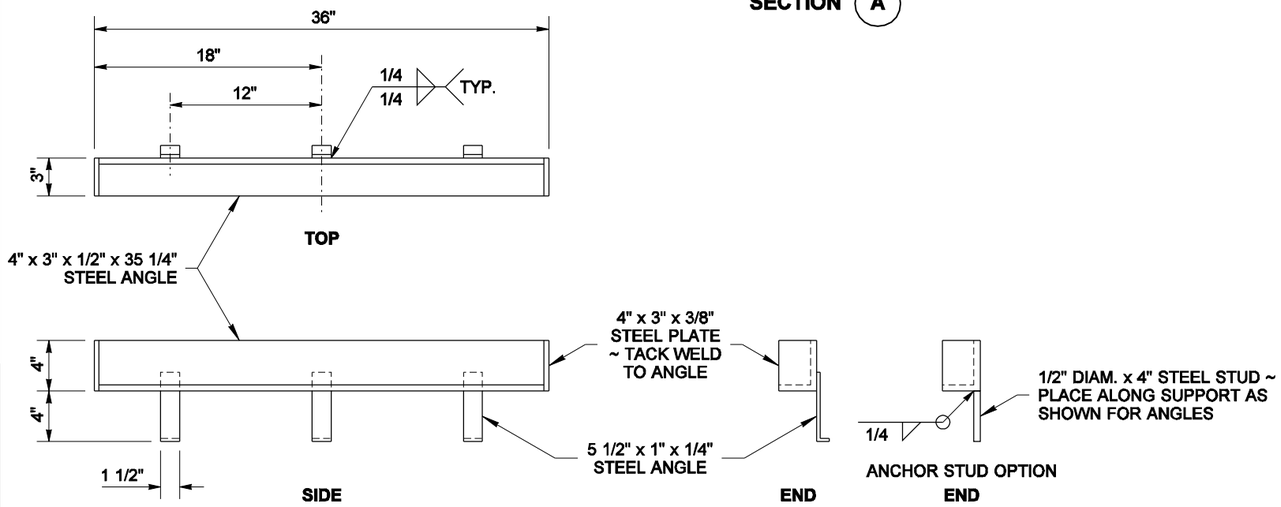

GRATE SUPPORT DETAIL
(SIX SUPPORTS REQUIRED)

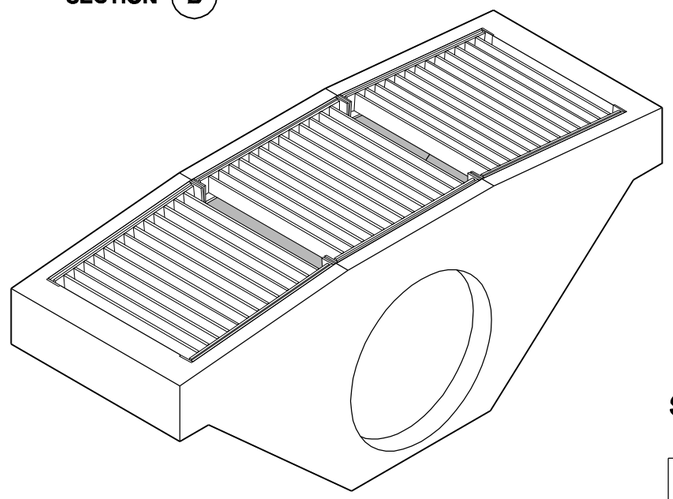

ISOMETRIC
(SHOWN WITH TYPE 2 GRATE)

NOTES

1. The top of the inlet shall be placed at ground level to present an unobstructed ditch or median section.
2. Bevel or round exposed concrete edges 1/2".
3. Pipes may enter through the knockouts at any reasonable angle provided the outside of the pipe can be contained within the knockout provided.
4. The grade line of the lowest inlet pipe shall enter the structure at an elevation equal to or higher than the grade line of the outlet pipe.
5. All pickup holes shall be grouted full after the inlet has been placed.
6. The steel angles shall be set so that each bearing bar of the grate shall have full seating on both ends. The finished top of concrete shall be even with the grate surface. For grates, see Standard Plan B-50.20.
7. The amount, type, and grade of reinforcing steel is the responsibility of the manufacturer.
8. The inside wall taper for form removal shall not result in any wall section thinner than 6" except in pipe knockout areas.
9. Precast inlets shall be marked with the manufacturer's identification on the inside of the structure in some readily accessible location.



EXPIRES JULY 1, 2007

NOTE: THIS PLAN IS NOT A LEGAL ENGINEERING DOCUMENT BUT AN ELECTRONIC DUPLICATE. THE ORIGINAL, SIGNED BY THE ENGINEER, AND APPROVED FOR PUBLICATION, IS KEPT ON FILE AT THE WASHINGTON STATE DEPARTMENT OF TRANSPORTATION. A COPY MAY BE OBTAINED UPON REQUEST.

DROP INLET TYPE 2

STANDARD PLAN B-45.40-00

SHEET 1 OF 1 SHEET

APPROVED FOR PUBLICATION

Harold J. Peterfeso — STATE DESIGN ENGINEER — *06-01-06* — DATE

Washington State Department of Transportation

EFFECTIVE: APRIL 2, 2007 TO JANUARY 6, 2008

EFFECTIVE: APRIL 2, 2007 TO JANUARY 6, 2008

EFFECTIVE: APRIL 2, 2007 TO JANUARY 6, 2008
EFFECTIVE: APRIL 2, 2007 TO JANUARY 6, 2008

DRAWN BY: MARK SUJKA

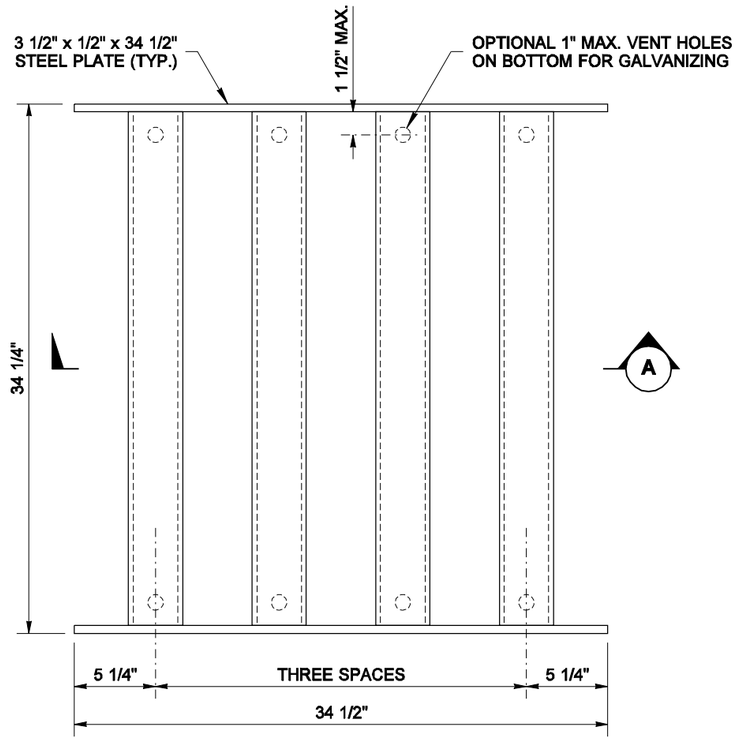

TYPE 1

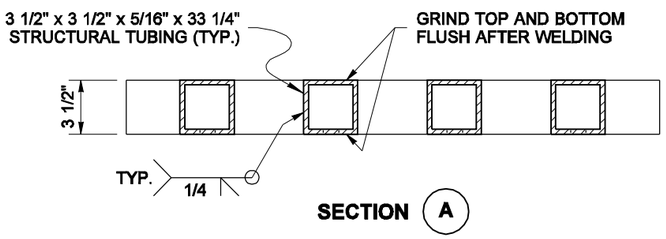

SECTION (A)

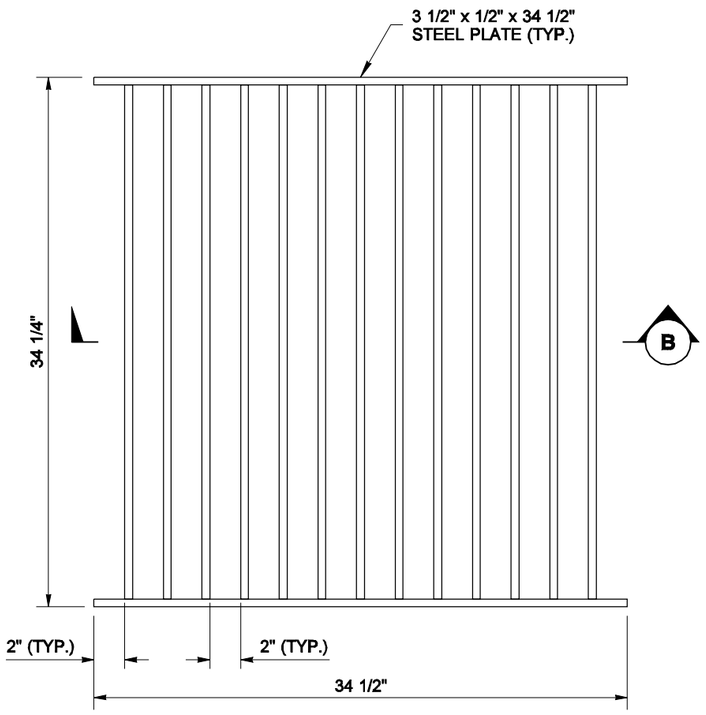

TYPE 2

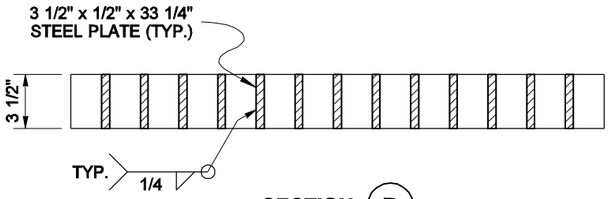

SECTION (B)

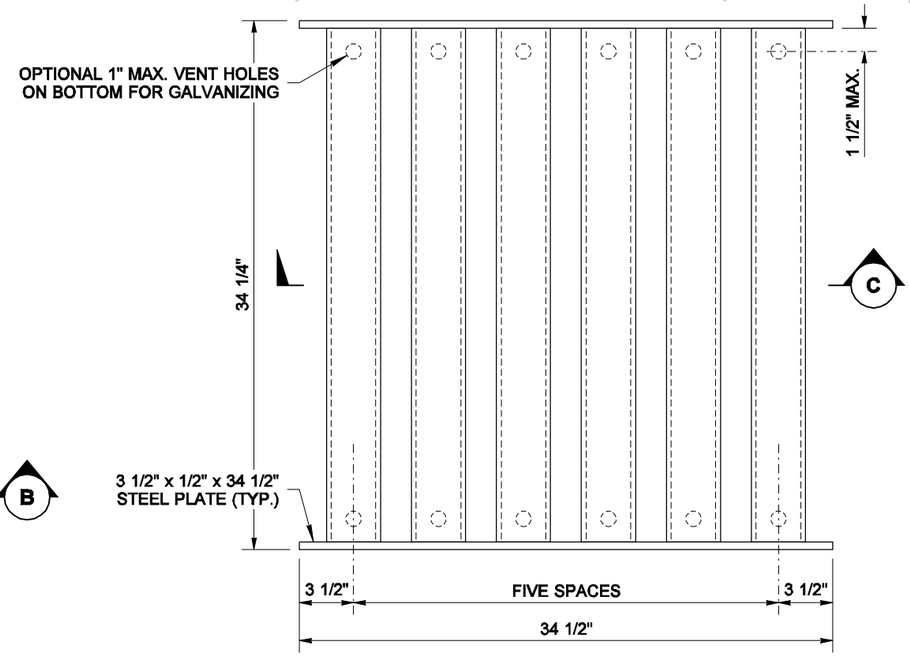

TYPE 3

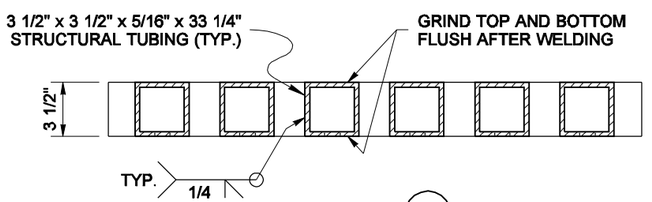

SECTION (C)

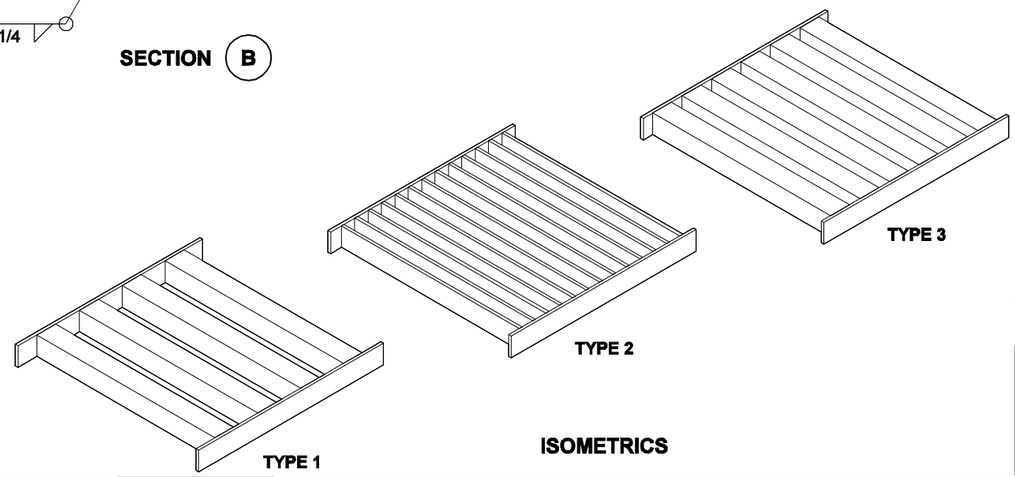

ISOMETRICS

MATTHEW J. WITECKI
STATE OF WASHINGTON
15588
REGISTERED
PROFESSIONAL ENGINEER

EXPIRES JULY 1, 2007

NOTE: THIS PLAN IS NOT A LEGAL ENGINEERING DOCUMENT BUT AN ELECTRONIC DUPLICATE. THE ORIGINAL, SIGNED BY THE ENGINEER AND APPROVED FOR PUBLICATION, IS KEPT ON FILE AT THE WASHINGTON STATE DEPARTMENT OF TRANSPORTATION. A COPY MAY BE OBTAINED UPON REQUEST.

GRATES FOR DROP INLET

STANDARD PLAN B-50.20-00

SHEET 1 OF 1 SHEET

APPROVED FOR PUBLICATION

Harold J. Peterfeso — STATE DESIGN ENGINEER

06-01-06 — DATE

Washington State Department of Transportation

EFFECTIVE: APRIL 2, 2007 TO JANUARY 6, 2008
EFFECTIVE: APRIL 2, 2007 TO JANUARY 6, 2008

EFFECTIVE: APRIL 2, 2007 TO JANUARY 6, 2008

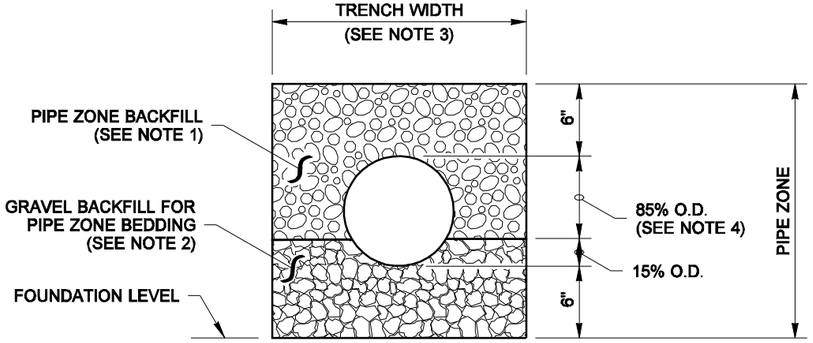

CONCRETE AND DUCTILE IRON PIPE

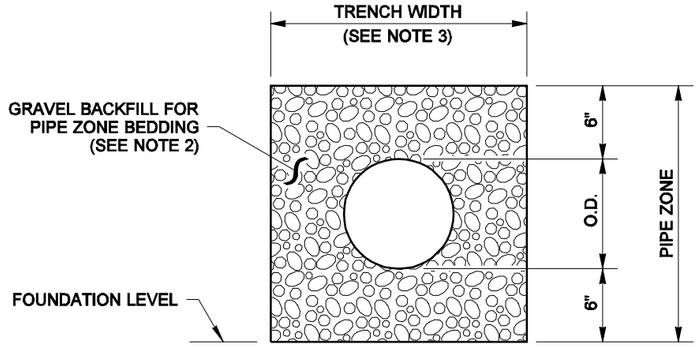

THERMOPLASTIC PIPE

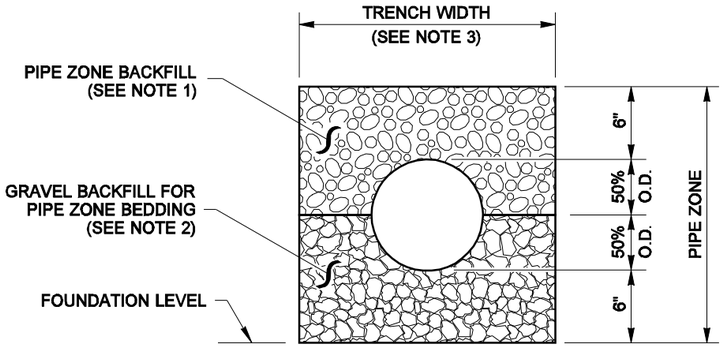

METAL PIPE

NOTES

1. See Standard Specifications Section 7-08.3(3) for Pipe Zone Backfill.
2. See Standard Specifications Section 9-03.12(3) for Gravel Backfill for Pipe Zone Bedding.
3. See Standard Specifications Section 2-09.4 for Measurement of Trench Width.
4. For sanitary sewer installation, concrete pipe shall be bedded to spring line.

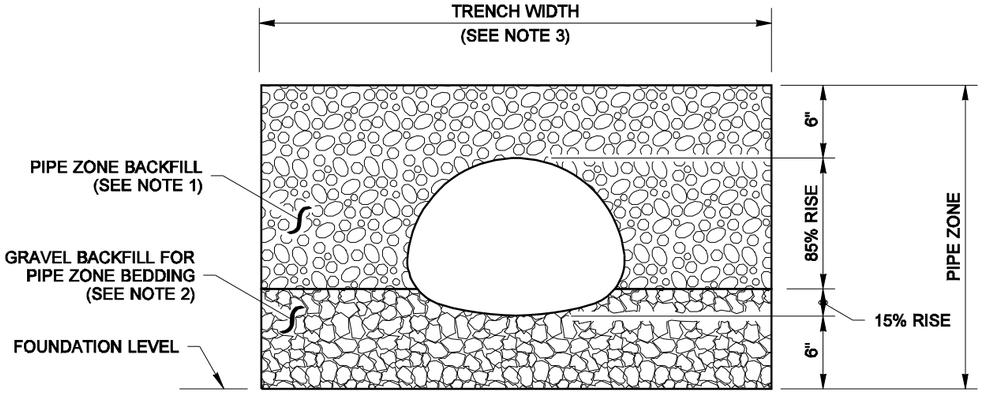

PIPE ARCHES

CLEARANCE BETWEEN PIPES FOR MULTIPLE INSTALLATIONS		
PIPE	**SIZE**	**MINIMUM DISTANCE BETWEEN BARRELS**
CIRCULAR PIPE (DIAMETER)	12" to 24"	12"
	30" to 96"	DIAM. /2
	102" to 180"	48"
PIPE ARCH (SPAN) METAL ONLY	18" to 36"	12"
	43" to 142"	SPAN /3
	148" to 200"	48"

MATTHEW J. WITECKI
STATE OF WASHINGTON
15588
REGISTERED
PROFESSIONAL ENGINEER

EXPIRES JULY 1, 2007

NOTE: THIS PLAN IS NOT A LEGAL ENGINEERING DOCUMENT BUT AN ELECTRONIC DUPLICATE. THE ORIGINAL, SIGNED BY THE ENGINEER AND APPROVED FOR PUBLICATION, IS KEPT ON FILE AT THE WASHINGTON STATE DEPARTMENT OF TRANSPORTATION. A COPY MAY BE OBTAINED UPON REQUEST.

PIPE ZONE BEDDING AND BACKFILL

STANDARD PLAN B-55.20-00

SHEET 1 OF 1 SHEET

APPROVED FOR PUBLICATION

Harold J. Peterfeso — STATE DESIGN ENGINEER — *06-01-06* — DATE

Washington State Department of Transportation

EFFECTIVE: APRIL 2, 2007 TO JANUARY 6, 2008

EFFECTIVE: APRIL 2, 2007 TO JANUARY 6, 2008

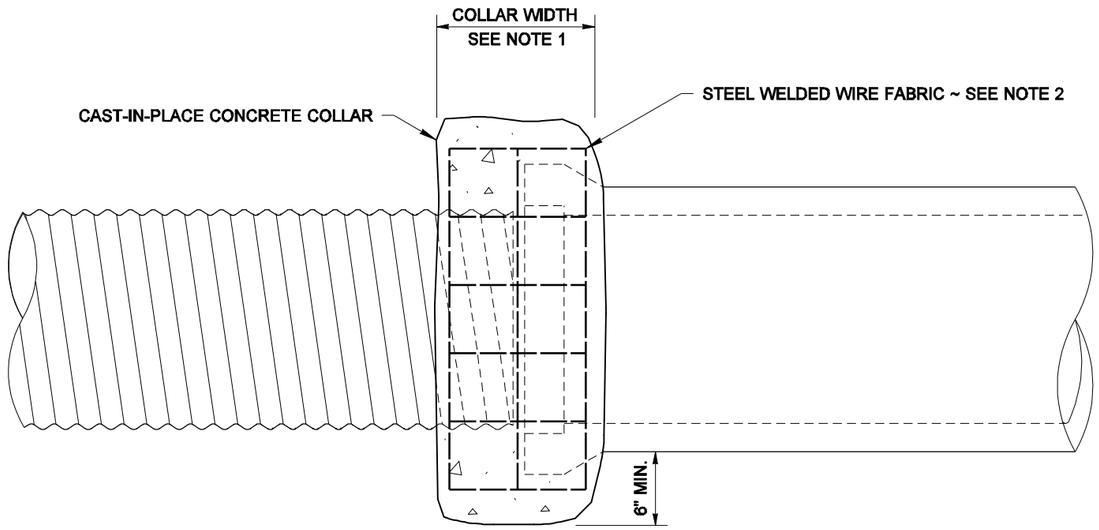

CONCRETE COLLAR OPTION

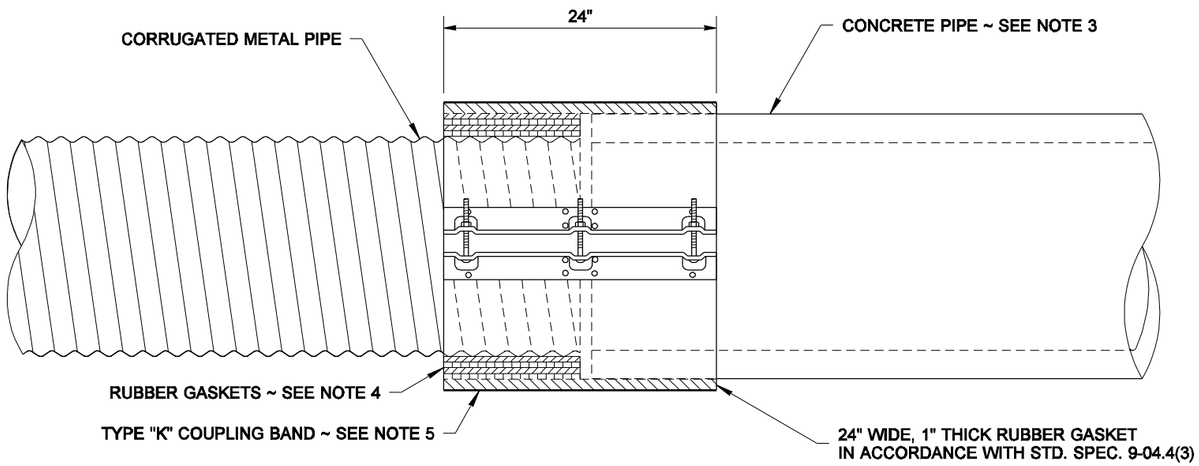

COUPLING BAND OPTION

NOTES

1. The Concrete Collar width shall be one half of the outside pipe diameter of the largest pipe. The minimum Concrete Collar width shall be 12". Concrete Collars may be used with all pipe materials and diameters. The Concrete Collar option shall only be used to extend existing pipes.

2. Steel Welded Wire Fabric shall be in accordance with Standard Specification 9-07.7. Install two wraps for size 6 × 6 W1.4 × W1.4 (10 Gage) Steel Welded Wire Fabric or one wrap for any of the following sizes:

   6 × 6 W2.1 × W2.1 (8 Gage)
   6 × 6 W2.9 × W2.9 (6 Gage)
   4 × 4 W2.9 × W2.9 (6 Gage)
   4 × 4 W4.0 × W4.0 (4 Gage)

3. When a Coupling Band connection requires attachment to the bell end of a concrete pipe, the bell end of the pipe shall be removed before the connection is installed.

4. Increase the outside diameter of the metal pipe to match the outside diameter of the concrete pipe by installing 12" wide rubber gaskets, thickness as required (Coupling Band only). The rubber gaskets shall be in accordance with Standard Specification 9-04.4(3).

5. Use a flat Type K Coupling Band. Type K Coupling Bands with dimples are not allowed for the installation detail shown. The Coupling Band option shall only be used for extending existing pipes that have an inside diameter of 36" or less.



EXPIRES JULY 1, 2007

NOTE: THIS PLAN IS NOT A LEGAL ENGINEERING DOCUMENT BUT AN ELECTRONIC DUPLICATE. THE ORIGINAL, SIGNED BY THE ENGINEER AND APPROVED FOR PUBLICATION, IS KEPT ON FILE AT THE WASHINGTON STATE DEPARTMENT OF TRANSPORTATION. A COPY MAY BE OBTAINED UPON REQUEST.

CONNECTION DETAILS FOR DISSIMILAR CULVERT PIPE

STANDARD PLAN B-60.20-00

SHEET 1 OF 1 SHEET

APPROVED FOR PUBLICATION

Harold J. Peterfeso — STATE DESIGN ENGINEER — *06-08-06* — DATE

Washington State Department of Transportation

EFFECTIVE: APRIL 2, 2007 TO JANUARY 6, 2008

EFFECTIVE: APRIL 2, 2007 TO JANUARY 6, 2008

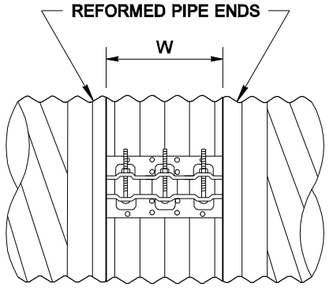

TYPE D
ANNULAR CORRUGATED BAND

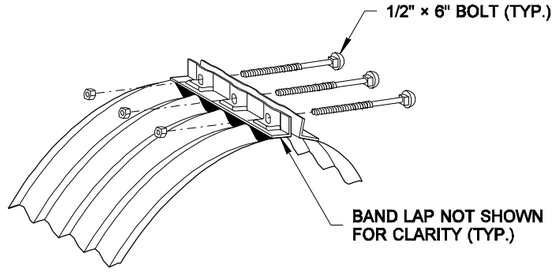

TYPE D
BAND ANGLE CONNECTOR DETAIL

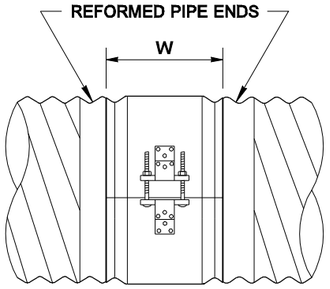

TYPE F
SEMI-CORRUGATED BAND

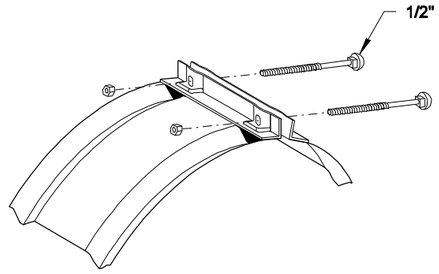

TYPE F
BAND ANGLE CONNECTOR DETAIL

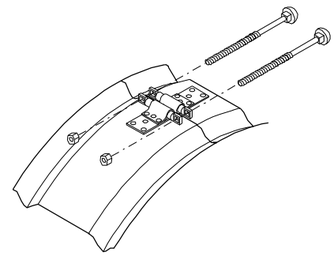

TYPE F
BAR & STRAP CONNECTOR DETAIL

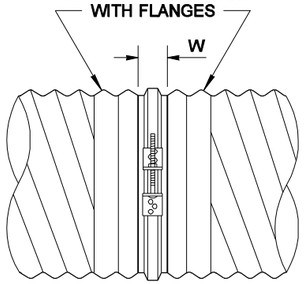

TYPE J
FLANGE BAND

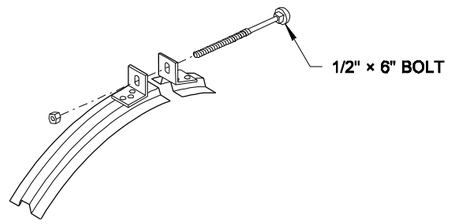

TYPE J
BAND ANGLE CONNECTOR DETAIL

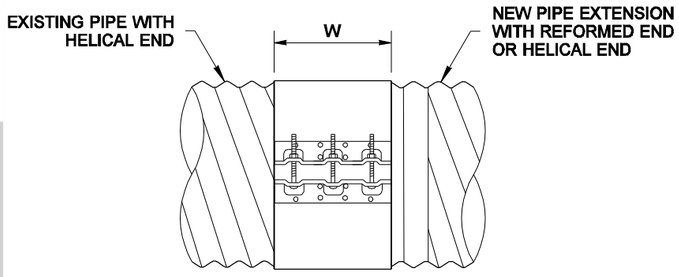

TYPE K
FLAT BAND OR DIMPLE BAND

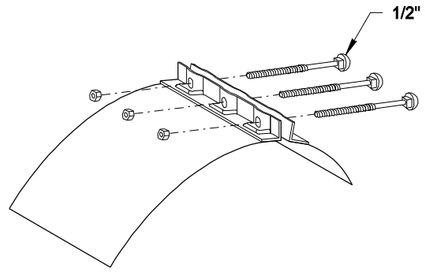

TYPE K
BAND ANGLE CONNECTOR DETAIL

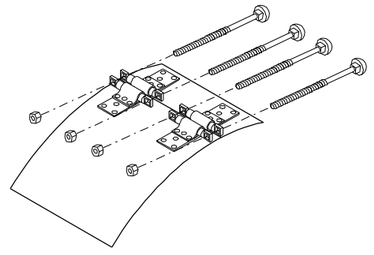

TYPE K
DOUBLE BAR & STRAP CONNECTOR DETAIL

COUPLING BAND DIMENSION TABLE
(ALL DIMENSIONS ARE IN INCHES)

BAND TYPE		CORRUGATION PITCH × DEPTH	PIPE DIAM.	MIN. W	GASKET TYPE
STEEL	D	2 2/3 × 1/2 OR 3 × 1 REFORMED TO 2 2/3 × 1/2	12 ~ 84	12	SLEEVE
		3 × 1 REFORMED TO 2 2/3 × 1/2	90 ~ 144	24	SLEEVE
	F	2 2/3 × 1/2 OR 3 × 1 REFORMED TO 2 2/3 × 1/2	12 ~ 84	10 1/2	O-RING
	J	2 2/3 × 1/2	12 ~ 48	2 3/4	BUTYL
	K	2 2/3 × 1/2	12 ~ 48	12	SLEEVE
			54 ~ 84	24	
		* 3 × 1	54 ~ 144	24	
ALUMINUM	D	2 2/3 × 1/2	12 ~ 72	12	SLEEVE
		3 × 1 REFORMED TO 2 2/3 × 1/2	36 ~ 60	12	
			66 ~ 108	24	
	F	2 2/3 x 1/2	12 ~ 48	10 1/2	O-RING
	K	2 2/3 x 1/2	12 ~ 48	12	SLEEVE
			54 ~ 84	24	
		* 3 × 1	54 ~ 96	24	

* PIPE ARCH ONLY



EXPIRES JULY 1, 2007

NOTE: THIS PLAN IS NOT A LEGAL ENGINEERING DOCUMENT BUT AN ELECTRONIC DUPLICATE. THE ORIGINAL, SIGNED BY THE ENGINEER AND APPROVED FOR PUBLICATION, IS KEPT ON FILE AT THE WASHINGTON STATE DEPARTMENT OF TRANSPORTATION. A COPY MAY BE OBTAINED UPON REQUEST.

COUPLING BANDS FOR CORRUGATED METAL PIPE

STANDARD PLAN B-60.40-00

SHEET 1 OF 1 SHEET

APPROVED FOR PUBLICATION

Harold J. Peterfeso — STATE DESIGN ENGINEER — *06-01-06* — DATE

Washington State Department of Transportation

EFFECTIVE: APRIL 2, 2007 TO JANUARY 6, 2008

EFFECTIVE: APRIL 2, 2007 TO JANUARY 6, 2008

DRAWN BY: MARK SUJKA

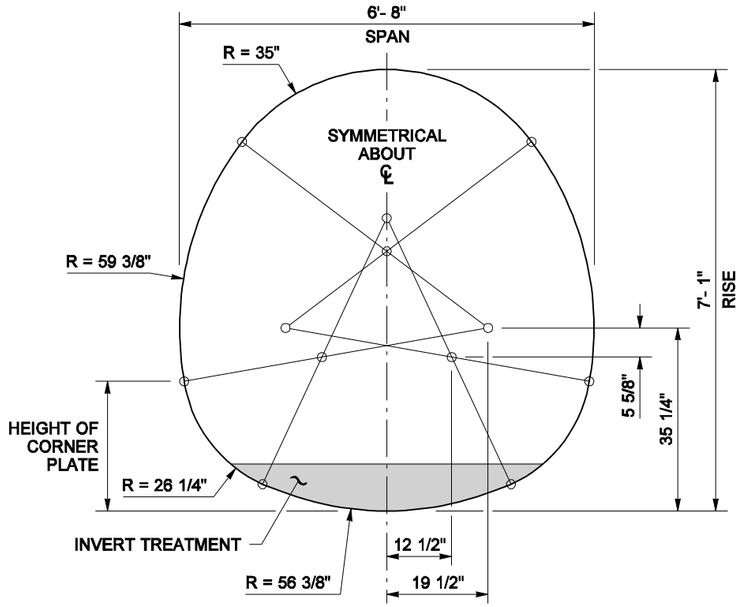

SECTION

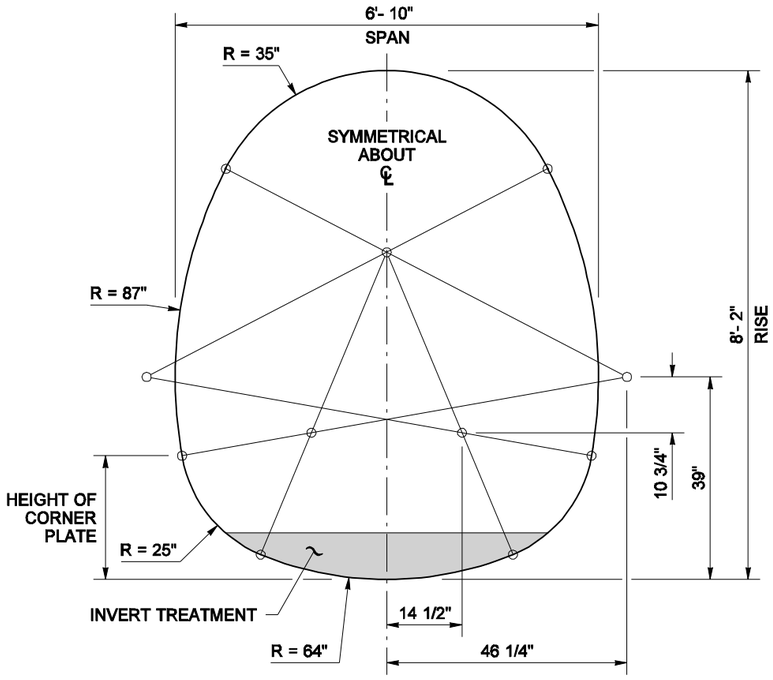

SECTION

NOTES

1. Span and rise dimensions are nominal and are measured to the inside crests of corrugations.
2. Allowable heights of cover shall be within the limits indicated in the table included hereon. Minimums and maximums are shown.
3. Unless indicated otherwise a 10" depth (over the inside crests of corrugatons) of earth shall be placed in the invert of the Structural Plate Underpass, Design 1, for its full width and length. The earth shall consist of naturally occurring materials available in the vicinity of the structural plate underpass installation. See Standard Specification 7-03.3(4).
4. Designed for H-20 live load and maximum allowable soil pressure of 6 Kips per square foot.

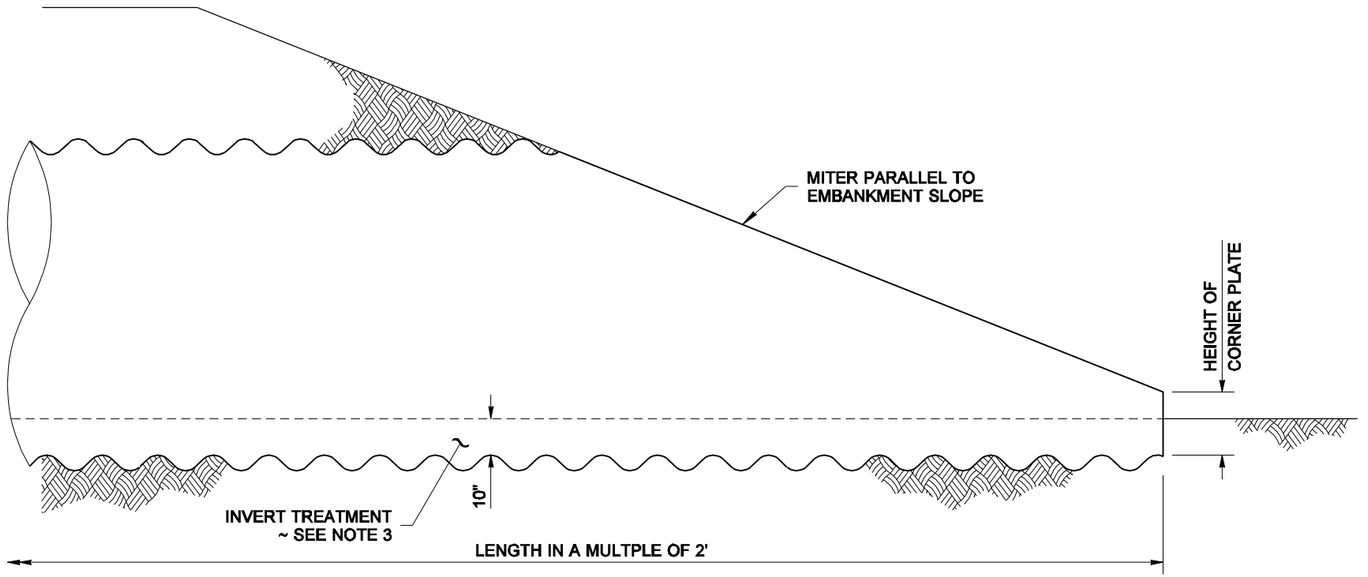

SIDE VIEW ~ PLACEMENT

ALLOWABLE HEIGHTS OF COVER			
SPAN	RISE	12 GAGE THICK CORRUGATED METAL	
		COVER	
		MIN.	MAX.
6' - 8"	7' - 1"	4'	26'
6' - 10"	8' - 2"	5'	25'

MATTHEW J. WITECKI
STATE OF WASHINGTON
15588
REGISTERED
PROFESSIONAL ENGINEER

EXPIRES JULY 1, 2007

NOTE: THIS PLAN IS NOT A LEGAL ENGINEERING DOCUMENT BUT AN ELECTRONIC DUPLICATE. THE ORIGINAL, SIGNED BY THE ENGINEER AND APPROVED FOR PUBLICATION, IS KEPT ON FILE AT THE WASHINGTON STATE DEPARTMENT OF TRANSPORTATION. A COPY MAY BE OBTAINED UPON REQUEST.

ANIMAL/PEDESTRIAN UNDERPASS

STANDARD PLAN B-65.20-00

SHEET 1 OF 1 SHEET

APPROVED FOR PUBLICATION

Harold J. Peterfeso — STATE DESIGN ENGINEER — *06-01-06* — DATE

Washington State Department of Transportation

EFFECTIVE: APRIL 2, 2007 TO JANUARY 6, 2008

EFFECTIVE: APRIL 2, 2007 TO JANUARY 6, 2008

DRAWN BY: MARK SUJKA

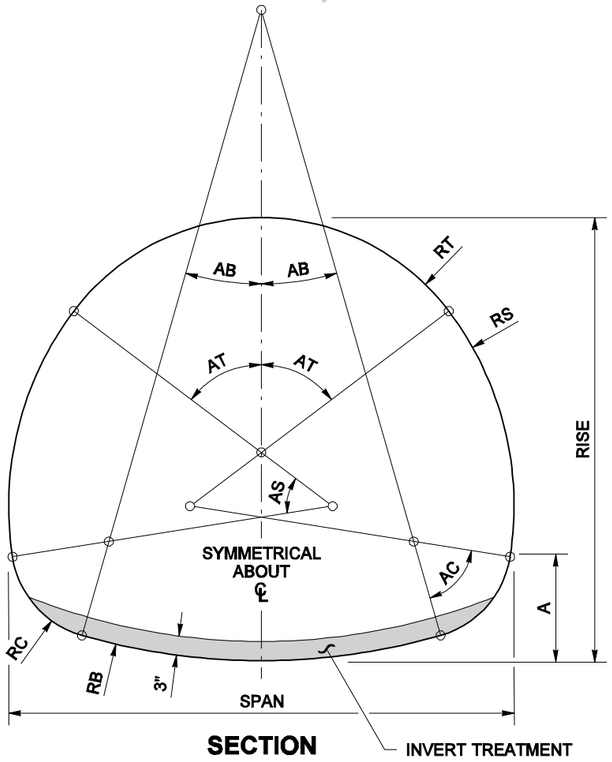

SECTION

NOTES

Span and rise dimensions are measured to the inside crests of corrugations and may vary slightly depending on manufacturer.

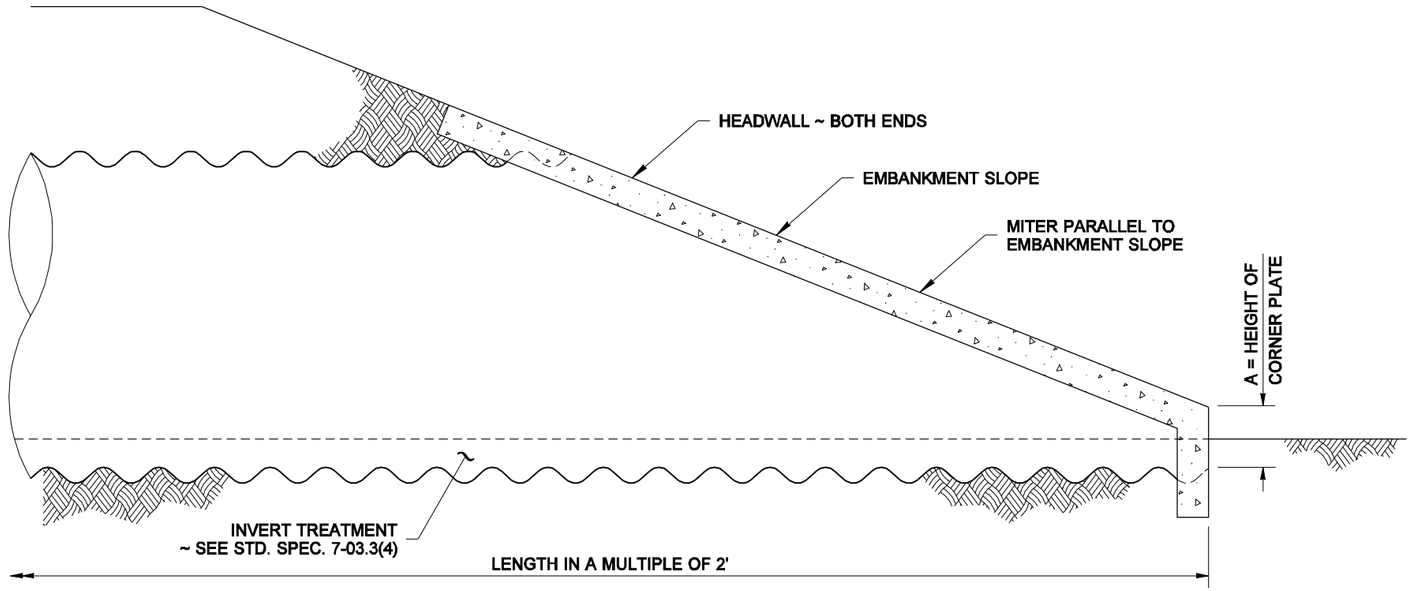

SIDE VIEW ~ PLACEMENT

DIMENSIONS										ALLOWABLE HEIGHTS OF COVER					
										CORRUGATED METAL THICKNESS					
SPAN	RISE	ANGLES (DEGREES)				RADII (INCHES)				A (INCHES)	12 GAGE		10 GAGE		8 GAGE	
		AT	AS	AC	AB	RT	RS	RC	RB		MIN.	MAX.	MIN.	MAX.	MIN.	MAX.
12' - 2"	11' - 0"	52	42	65	21	68	93	38	134	44	3'	14'	3'	20'	3'	26'
12' - 11"	11' - 3"	52	41	65	21	73	95	38	144	45	3'	13'	3'	19'	3'	25'
13' - 2"	11' - 11"	52	43	65	19	73	103	38	159	43	4'	13'	4'	19'	4'	24'
13' - 10"	12' - 3"	53	41	65	20	77	108	38	164	45	4'	12'	4'	18'	4'	23'
14' - 1"	12' - 10"	53	44	65	18	77	115	38	182	43	4'	12'	4'	18'	4'	23'
14' - 6"	13' - 6"	56	38	65	21	78	131	38	174	46	4'	11'	4'	17'	4'	22'
14' - 10"	14' - 0"	55	41	65	19	79	136	38	192	44	4'	11'	4'	17'	4'	21'
15' - 6"	14' - 4"	55	40	65	19	84	138	38	201	46	4'	11'	4'	16'	4'	20'
15' - 9"	15' - 1"	56	41	65	18	83	150	38	212	45	---	---	4'	16'	4'	20'
16' - 4"	15' - 5"	57	39	65	19	86	157	38	215	47	---	---	4'	15'	4'	19'
16' - 5"	16' - 1"	58	42	65	14	88	158	38	271	41	---	---	4'	15'	4'	19'
16' - 9"	16' - 3"	58	40	65	17	89	167	38	247	43	---	---	4'	15'	4'	19'
17' - 3"	17' - 0"	57	38	65	19	90	174	47	215	55	---	---	4'	14'	4'	18'
18' - 4"	16' - 11"	55	42	65	18	99	157	47	249	53	---	---	4'	13'	4'	18'
19' - 2"	17' - 2"	54	43	65	18	105	156	47	264	53	---	---	---	---	4'	17'
19' - 6"	17' - 7"	53	46	65	16	107	158	47	297	50	---	---	---	---	4'	17'
20' - 4"	17' - 10"	53	46	65	16	113	156	47	314	52	---	---	---	---	4'	16'

MATTHEW J. WITECKI
STATE OF WASHINGTON
15588
REGISTERED
PROFESSIONAL ENGINEER

EXPIRES JULY 1, 2007

NOTE: THIS PLAN IS NOT A LEGAL ENGINEERING DOCUMENT BUT AN ELECTRONIC DUPLICATE. THE ORIGINAL, SIGNED BY THE ENGINEER AND APPROVED FOR PUBLICATION, IS KEPT ON FILE AT THE WASHINGTON STATE DEPARTMENT OF TRANSPORTATION. A COPY MAY BE OBTAINED UPON REQUEST.

EQUIPMENT UNDERPASS

STANDARD PLAN B-65.40-00

SHEET 1 OF 1 SHEET

APPROVED FOR PUBLICATION

Harold J. Peterfeso — STATE DESIGN ENGINEER — *06-01-06* — DATE

Washington State Department of Transportation

EFFECTIVE: APRIL 2, 2007 TO JANUARY 6, 2008

EFFECTIVE: APRIL 2, 2007 TO JANUARY 6, 2008
EFFECTIVE: APRIL 2, 2007 TO JANUARY 6, 2008

END SECTION LENGTH SHALL BE AT LEAST SIX TIMES THE DIAMETER OF THE PIPE (SEE STD. SPEC. 7-02.3(1))

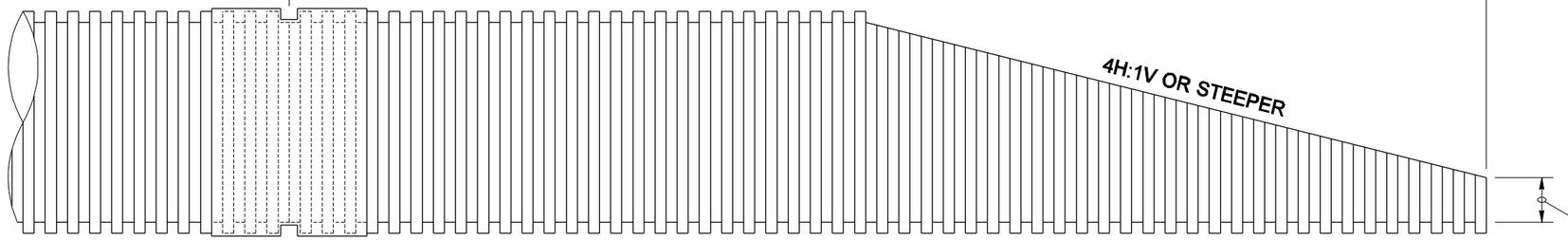

THERMOPLASTIC PIPE

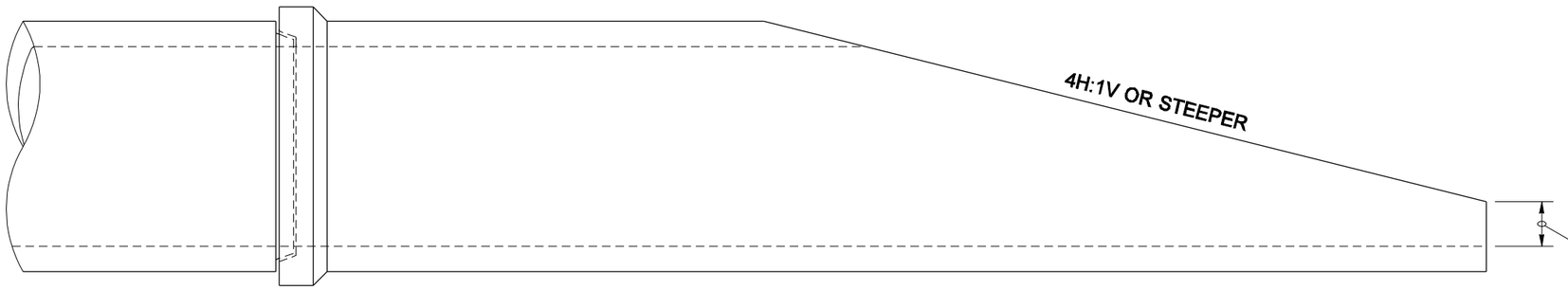

CONCRETE PIPE

END SECTION LENGTH SHALL BE AT LEAST SIX TIMES THE DIAMETER OF THE PIPE (SEE STD. SPEC. 7-02.3(1))

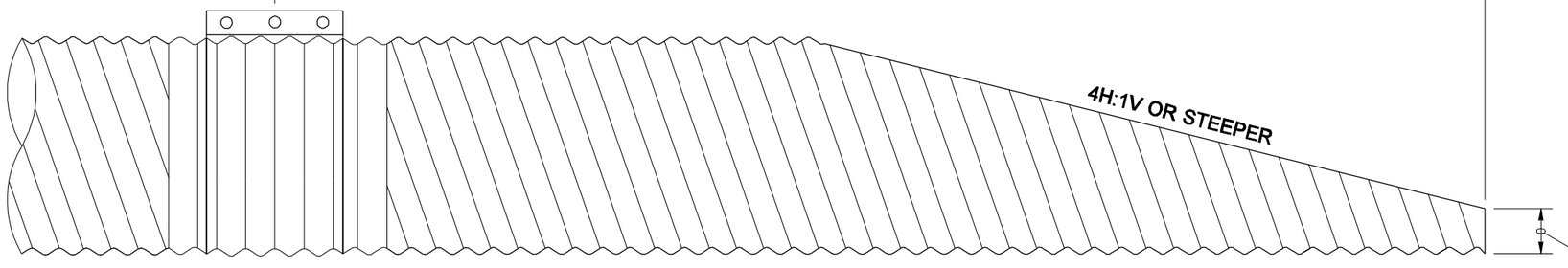

METAL PIPE

NOTES

1. The culvert ends shall be beveled to match the embankment or ditch slope and shall not be beveled flatter than 4H:1V. When slopes are between 4H:1V and 6H:1V, shape the slope in the vicintiy of the culvert end to ensure that no part of the culvert protrudes more than 4" above the ground line.

2. Field cutting of culvert ends is permitted when approved by the Engineer. All field-cut culvert pipe shall be treated with treatment as shown in the Standard Specifications or General Special Provisions.

FOR CULVERTS 30" DIAMETER OR LESS



NOTE: THIS PLAN IS NOT A LEGAL ENGINEERING DOCUMENT BUT AN ELECTRONIC DUPLICATE. THE ORIGINAL, SIGNED BY THE ENGINEER AND APPROVED FOR PUBLICATION, IS KEPT ON FILE AT THE WASHINGTON STATE DEPARTMENT OF TRANSPORTATION. A COPY MAY BE OBTAINED UPON REQUEST.

BEVELED END SECTIONS

STANDARD PLAN B-70.20-00

SHEET 1 OF 1 SHEET

APPROVED FOR PUBLICATION

Harold J. Peterfeso — STATE DESIGN ENGINEER — *06-01-06* — DATE

Washington State Department of Transportation

EFFECTIVE: APRIL 2, 2007 TO JANUARY 6, 2008
EFFECTIVE: APRIL 2, 2007 TO JANUARY 6, 2008

EFFECTIVE: APRIL 2, 2007 TO JANUARY 6, 2008

DRAWN BY: MARK SUJKA

PIPE ARCH												
PIPE ARCH DIMENSION (INCHES)		THICKNESS (INCHES)			DIMENSIONS (INCHES)						SKIRT	END SECTION SLOPE (H:V)
					A	B	H	L	W	T		
SPAN	RISE	STEEL		ALUM.	TOL. ± 1"	MAX.	TOL. ± 1"	TOL. ± 1 1/2"	TOL. ± 2"	TOL. ± 2"		
17	13	0.064		0.060	7	9	6	19	30	40	1 PC.	2 1/2 : 1
21	15	0.064		0.060	7	10	6	23	36	46	1 PC.	2 1/2 : 1
24	18	0.064		0.060	8	12	6	28	42	52	1 PC.	2 1/2 : 1
28	20	0.064		0.075	9	14	6	32	48	58	1 PC.	2 1/2 : 1
35	24	0.079		0.075	10	16	6	39	60	70	1 PC.	2 1/2 : 1
42	29	0.079		0.105	12	18	8	46	75	85	2 PC.	2 1/2 : 1
49	33	0.109		0.105	13	21	9	53	85	103	2 PC.	2 1/2 : 1
57	38	0.109	0.138	0.105	18	26	12	63	90	114	3 PC.	2 1/2 : 1
64	43	0.109	0.138	0.105	18	30	12	70	102	130	3 PC.	2 1/2 : 1
71	47	0.109	0.138	0.135	18	33	12	77	114	146	3 PC.	2 1/2 : 1
77	52	0.109	0.138	——	18	36	12	77	126	152	3 PC.	1 3/4 : 1
83	57	0.109	0.138	——	18	39	12	77	138	158	3 PC.	1 1/2 : 1

PIPE										
PIPE DIAM. (INCHES)	THICKNESS (INCHES)		DIMENSIONS (INCHES)						SKIRT	END SECTION SLOPE (H:V)
			A	B	H	L	W	T		
	STEEL	ALUM.	TOL. ± 1"	MAX.	TOL. ± 1"	TOL. ± 1 1/2"	TOL. ± 2"	TOL. ± 2"		
12	0.064	0.060	6	6	6	21	24	34	1 PC.	2 1/2 : 1
15	0.064	0.060	7	8	6	26	30	40	1 PC.	2 1/2 : 1
18	0.064	0.060	8	10	6	31	36	46	1 PC.	2 1/2 : 1
21	0.064	0.060	9	12	6	36	42	52	1 PC.	2 1/2 : 1
24	0.064	0.075	10	13	6	41	48	58	1 PC.	2 1/2 : 1
30	0.079	0.075	12	16	8	51	60	70	2 PC.	2 1/2 : 1
36	0.079	0.105	14	19	9	60	72	94	2 PC.	2 1/2 : 1
42	0.109	0.105	16	22	11	69	84	106	2 PC.	2 1/2 : 1
48	0.109	0.105	18	27	12	78	90	112	2 PC.	2 1/2 : 1
54	0.109	——	18	30	12	84	102	122	2 PC.	2 1/2 : 1
60	0.109 0.138	——	18	33	12	87	114	134	3 PC.	1 3/4 : 1
66	0.109 0.138	——	18	36	12	87	120	142	3 PC.	1 1/2 : 1
72	0.109 0.138	——	18	39	12	87	126	146	3 PC.	1 1/3 : 1
78	0.109 0.138	——	18	42	12	87	132	152	3 PC.	1 1/4 : 1
84	0.109 0.138	——	18	45	12	87	138	158	3 PC.	1 1/6 : 1

NOTES

1. The diameter of the end section of Design B shall match the inside diameter of the concrete pipe.
2. Skirt sections shall be made in one piece for round pipe with a diameter of 12" to 24" inclusive and for pipe arches with a rise of 13" to 20" inclusive. Skirt sections for larger sizes of pipes may be multiple pieces in conformance with the tabulated values shown.
3. Design A end sections for 42" thru 84" diameter and 49" x 33" thru 83" x 57" arch with annular corrugations and all helically corrugated pipe arch include one foot of pipe length as a connector section. The connector section shall be attached to the end section by welds, rivets or bolts and shall be the same thickness as the end section.
4. Design C may be used in lieu of Design A for all metal pipe sizes except as noted. Coupling bands may be any acceptable type for the pipe specified.
5. Multiple panel skirts shall have 2" lap seams tightly joined by 3/8" stainless steel rivets or galvanized bolts on 6" max. centers.
6. The reinforced edges of the following size End Sections shall be supplemented with galvanized steel stiffener angles:

   60" thru 72" diameter pipe ..... 2" x 2" x 1/4" angle

   78" and 84" diameter pipe, and
   77" x 52" & 83" x 57" pipe arch ..... 2 1/2" x 2 1/2" x 1/4" angle

   The above galvanized angles shall be attached by 3/8" galvanized nuts and bolts.
7. Galvanized steel angle reinforcement will be placed under the center panel seams on the 72" thru 84" diam. pipe and 77" x 52" & 83" x 57" pipe arch End Sections.
8. As an alternative to the connector lug and threaded rod used on 12" thru 24" culvert pipe, the attachment may be made with a 1" wide strap, 16 gage galvanized steel fastened with a 1/2" diam., 6" long galvanized bolt and one squarehead nut.

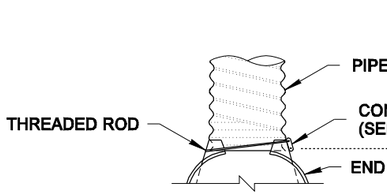

FOR 12" THRU 24" PIPE AND 17" x 13" THRU 28" x 20" PIPE ARCH WITH ANNULAR END CORRUGATIONS

TYPE 1

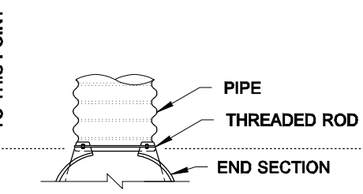

FOR 30" THRU 84" PIPE AND 35" x 24" THRU 83" x 57" PIPE ARCH WITH ANNULAR END CORRUGATIONS

TYPE 2

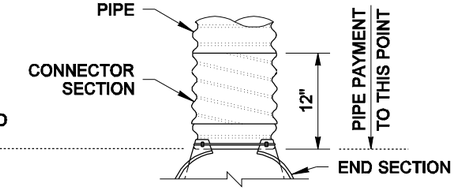

FOR 42" THRU 84" PIPE AND 49" x 33" THRU 83" x 57" PIPE ARCH WITH ANNULAR END CORRUGATIONS, AND ALL HELICAL END CORRUGATED PIPE AND PIPE ARCH

TYPE 3

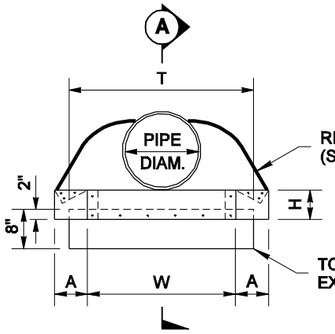

PIPE ~ ELEVATION

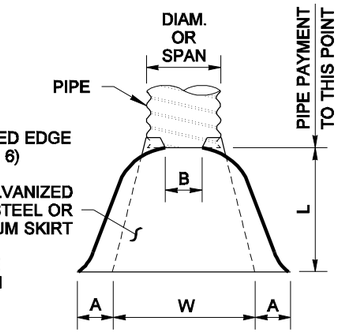

PIPE & PIPE ARCH ~ PLAN

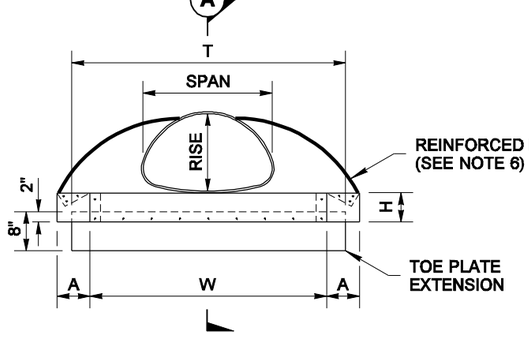

PIPE ARCH ~ ELEVATION

DESIGN A
CONNECTION TO METAL PIPE

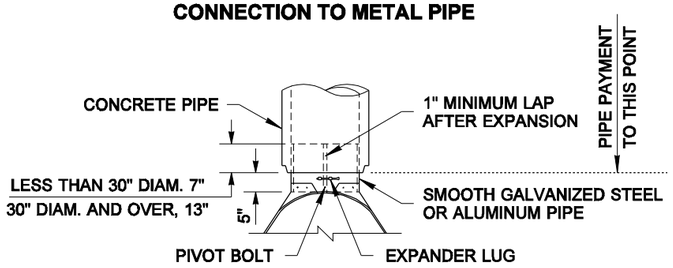

DESIGN B
CONNECTION TO CONCRETE PIPE INLET END ONLY



EXPIRES JULY 1, 2007

NOTE: THIS PLAN IS NOT A LEGAL ENGINEERING DOCUMENT BUT AN ELECTRONIC DUPLICATE. THE ORIGINAL, SIGNED BY THE ENGINEER AND APPROVED FOR PUBLICATION, IS KEPT ON FILE AT THE WASHINGTON STATE DEPARTMENT OF TRANSPORTATION. A COPY MAY BE OBTAINED UPON REQUEST.

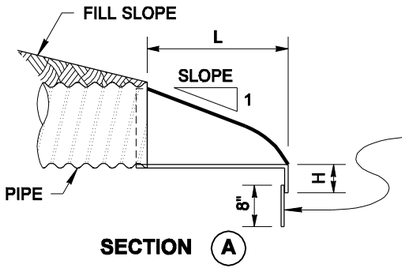

TOE PLATE EXTENSION ~ WHEN REQUIRED; GALVANIZED STEEL OR ALUMINUM, SAME GAGE AS SKIRT, LAPPED 2", FASTENED W/ 3/8" S.S. OR AL. RIVETS OR GALVANIZED BOLTS ON 12" MAX. CENTERS.

SECTION (A)

PIPE COUPLING BAND, SHOP BOLTED TO FLARED END SECTION WITH 3/8" BOLTS AT 6" ON CENTER MAXIMUM OR EQUIVALENT RIVETED OR WELDED CONNECTION. FOR USE WITH ALL SIZES OF PIPE AND PIPE ARCH WITH ANNULAR ENDS.

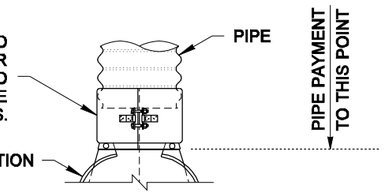

DESIGN C
CONNECTION TO METAL OR CONCRETE PIPE OUTLET ONLY

FLARED END SECTIONS

STANDARD PLAN B-70.60-00

SHEET 1 OF 1 SHEET

APPROVED FOR PUBLICATION

Harold J. Peterfeso — STATE DESIGN ENGINEER — *06-01-06* — DATE

Washington State Department of Transportation

EFFECTIVE: APRIL 2, 2007 TO JANUARY 6, 2008

EFFECTIVE: APRIL 2, 2007 TO JANUARY 6, 2008

DRAWN BY: ADAM COCHRAN

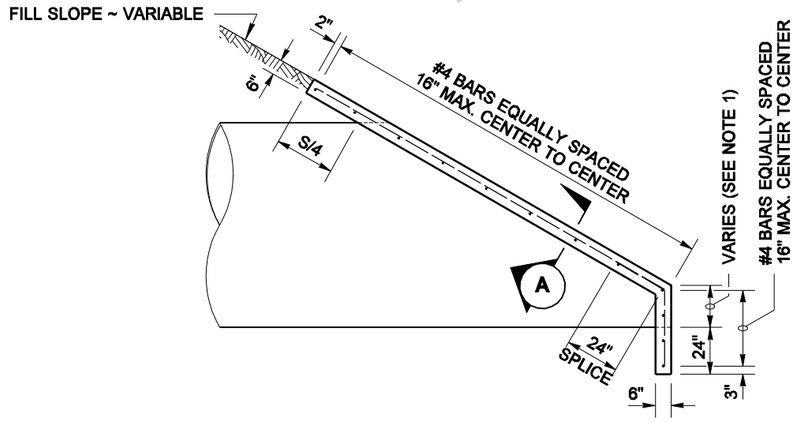

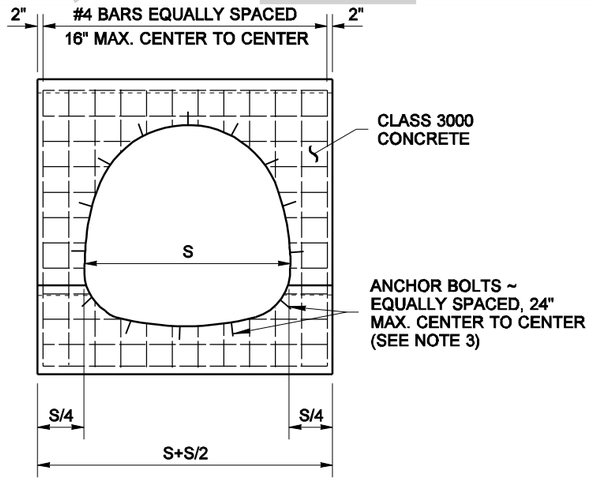

NOTES

1. The variable dimension indicated for the height of step for step mitered pipes shall conform to the manufacturers recommendations unless specified differently on the plans or in the Special Provisions.
2. Reinforcing steel shall have 1 1/2" min. clear cover to all concrete surfaces.
3. Headwalls for concrete culvert pipe may omit anchor bolt attachment.
4. When steel pipe safety bars ar used, headwall thickness shall be increased to 8".

STRUCTURAL PLATE PIPE ARCHES AND UNDERPASSES

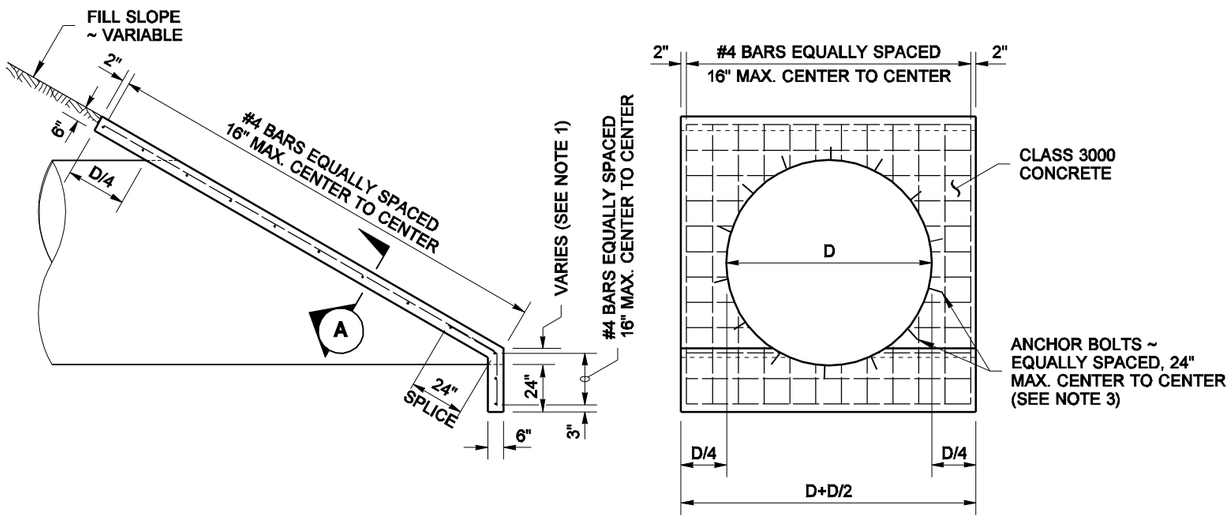

STEP MITERED PIPE

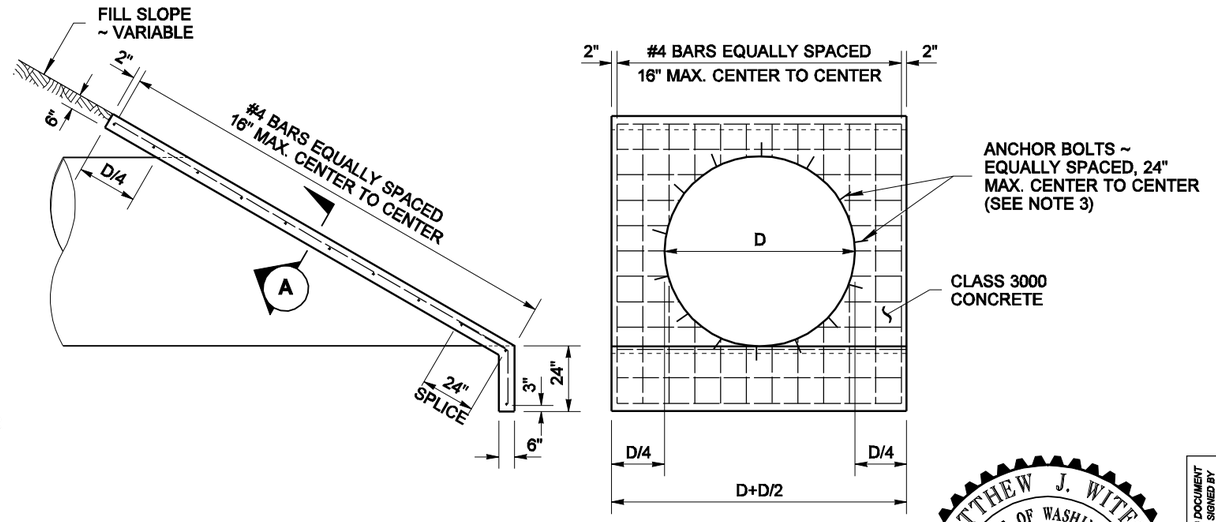

FULL MITERED PIPE

PIPES AND STRUCTURAL PLATE PIPES

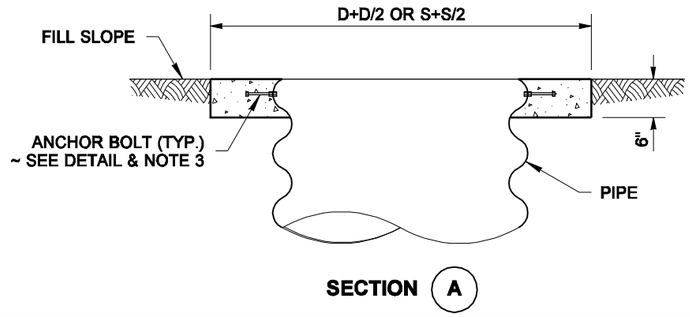

SECTION (A)

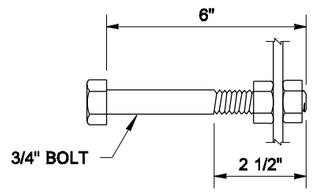

ANCHOR BOLT DETAIL



EXPIRES JULY 1, 2007

NOTE: THIS PLAN IS NOT A LEGAL ENGINEERING DOCUMENT BUT AN ELECTRONIC DUPLICATE. THE ORIGINAL, SIGNED BY THE ENGINEER AND APPROVED FOR PUBLICATION, IS KEPT ON FILE AT THE WASHINGTON STATE DEPARTMENT OF TRANSPORTATION. A COPY MAY BE OBTAINED UPON REQUEST.

HEADWALLS FOR CULVERT PIPE AND UNDERPASS

STANDARD PLAN B-75.20-00

SHEET 1 OF 1 SHEET

APPROVED FOR PUBLICATION

Harold J. Peterfeso — STATE DESIGN ENGINEER — *06-01-06* — DATE

Washington State Department of Transportation

EFFECTIVE: APRIL 2, 2007 TO JANUARY 6, 2008

EFFECTIVE: APRIL 2, 2007 TO JANUARY 6, 2008

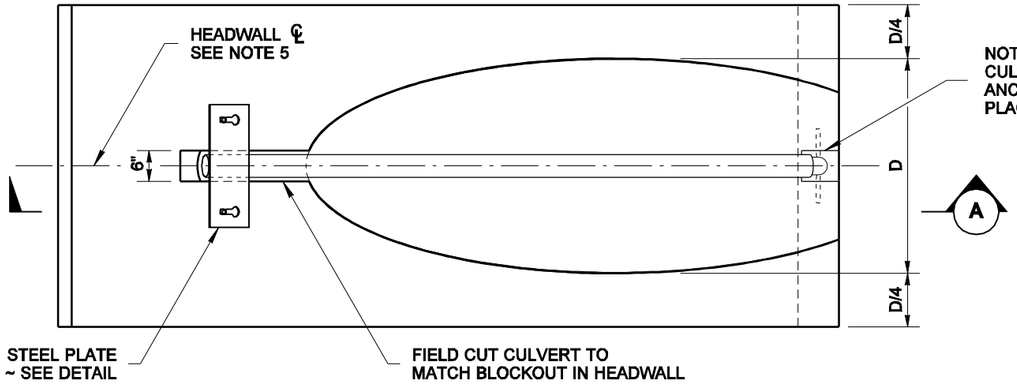

TOP VIEW

CULVERT IS PERPENDICULAR TO ROADWAY

CULVERT DIAM.	NUMBER OF BARS REQUIRED
UP TO 36"	NONE
42" ~ 60"	1
66" ~ 90"	2
96" ~ 120"	3

NOTES

1. Sockets shall be 3" extra strong steel pipe (3 1/2" O.D.). Sockets must be the proper angle and height so that safety bars are parallel with headwall and side slope, and are easily removable.
2. Safety Bars shall be 4" extra strong steel pipe (4 1/2" O.D.), or 4 1/2" O.D. (.250" wall thickness) steel tubing. Length (20' maximum) shall be the minimum required to achieve Resin Bonded Anchor placement in full depth concrete. When multiple bars are required (see table) place bars at equal spacing (30" max.).
3. Bevel culvert pipe to match side slope.
4. Resin bonded anchors shall be 7" in length (5" embedment).
5. Centerline of headwall shall be normal to roadway centerline.

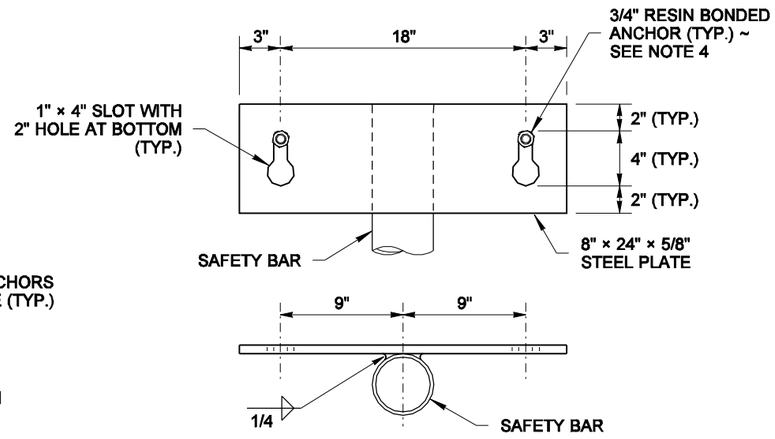

STEEL PLATE DETAIL

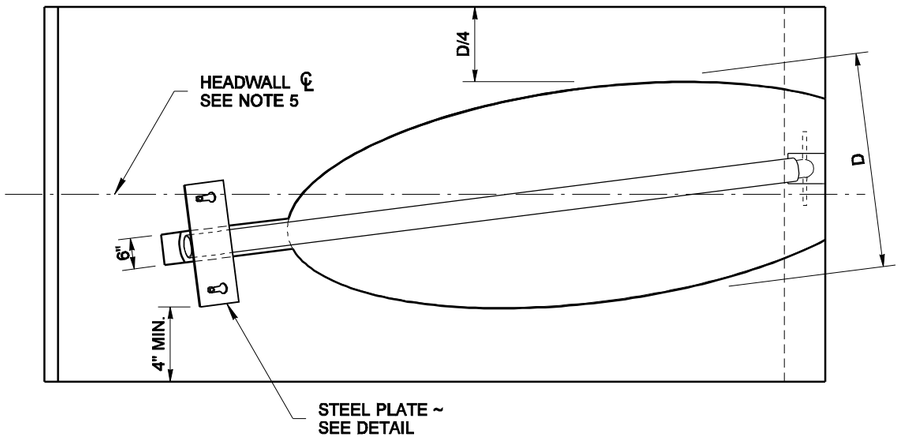

TOP VIEW

CULVERT IS SKEWED TO ROADWAY

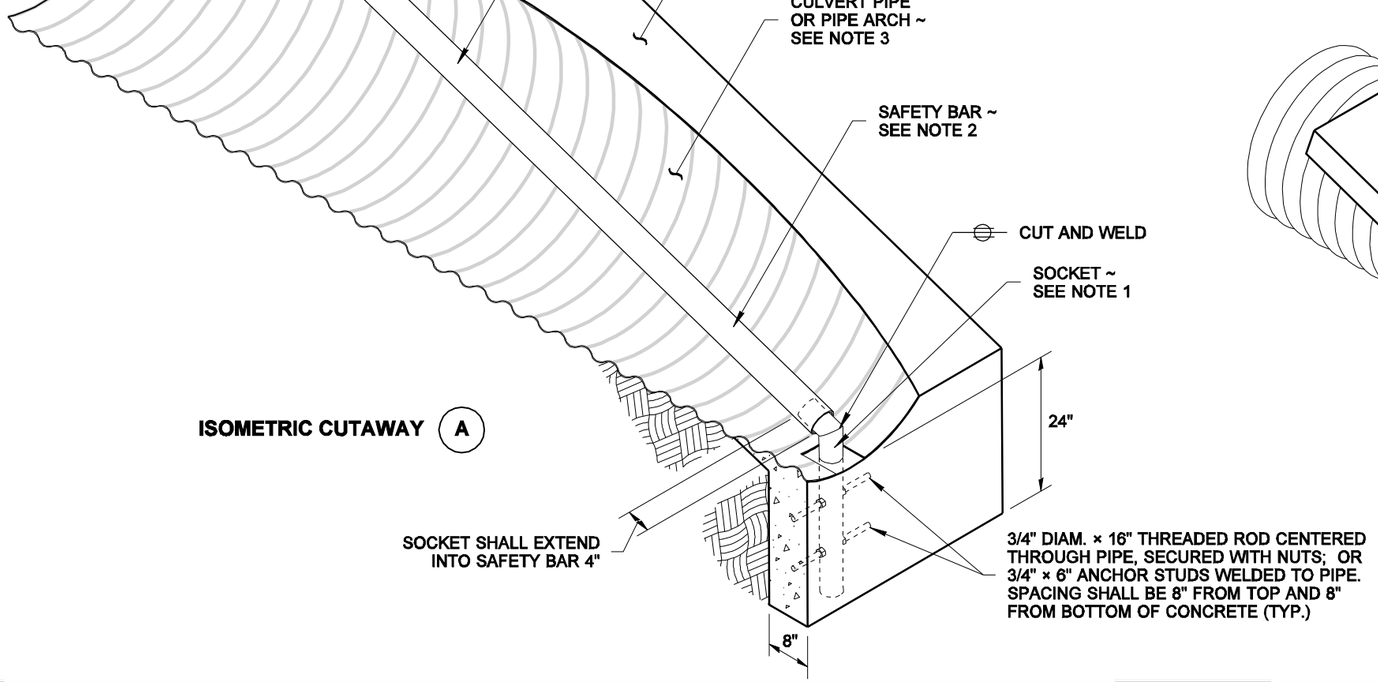

ISOMETRIC CUTAWAY (A)

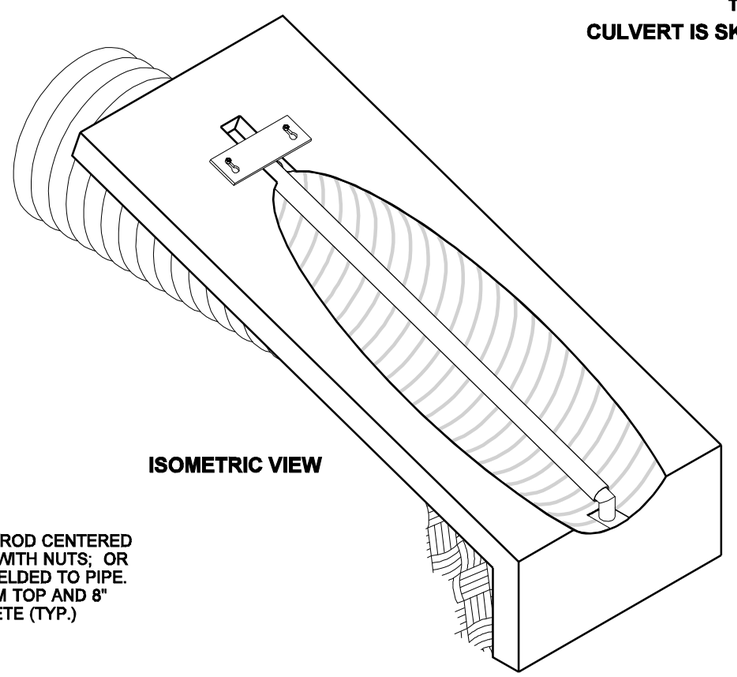

ISOMETRIC VIEW



EXPIRES JULY 1, 2007

NOTE: THIS PLAN IS NOT A LEGAL ENGINEERING DOCUMENT BUT AN ELECTRONIC DUPLICATE. THE ORIGINAL, SIGNED BY THE ENGINEER AND APPROVED FOR PUBLICATION, IS KEPT ON FILE AT THE WASHINGTON STATE DEPARTMENT OF TRANSPORTATION. A COPY MAY BE OBTAINED UPON REQUEST.

TYPE 1 SAFETY BARS FOR STEPPED CULVERT PIPE OR PIPE ARCH

STANDARD PLAN B-75.50-00

SHEET 1 OF 1 SHEET

APPROVED FOR PUBLICATION

Harold J. Peterfeso — STATE DESIGN ENGINEER — *06-08-06* — DATE

Washington State Department of Transportation

DRAWN BY: ADAM COCHRAN

EFFECTIVE: APRIL 2, 2007 TO JANUARY 6, 2008

EFFECTIVE: APRIL 2, 2007 TO JANUARY 6, 2008

DRAWN BY: ADAM COCHRAN

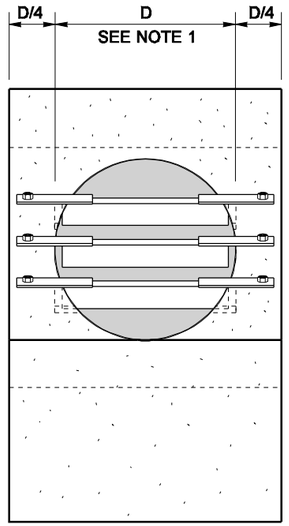

FRONT VIEW

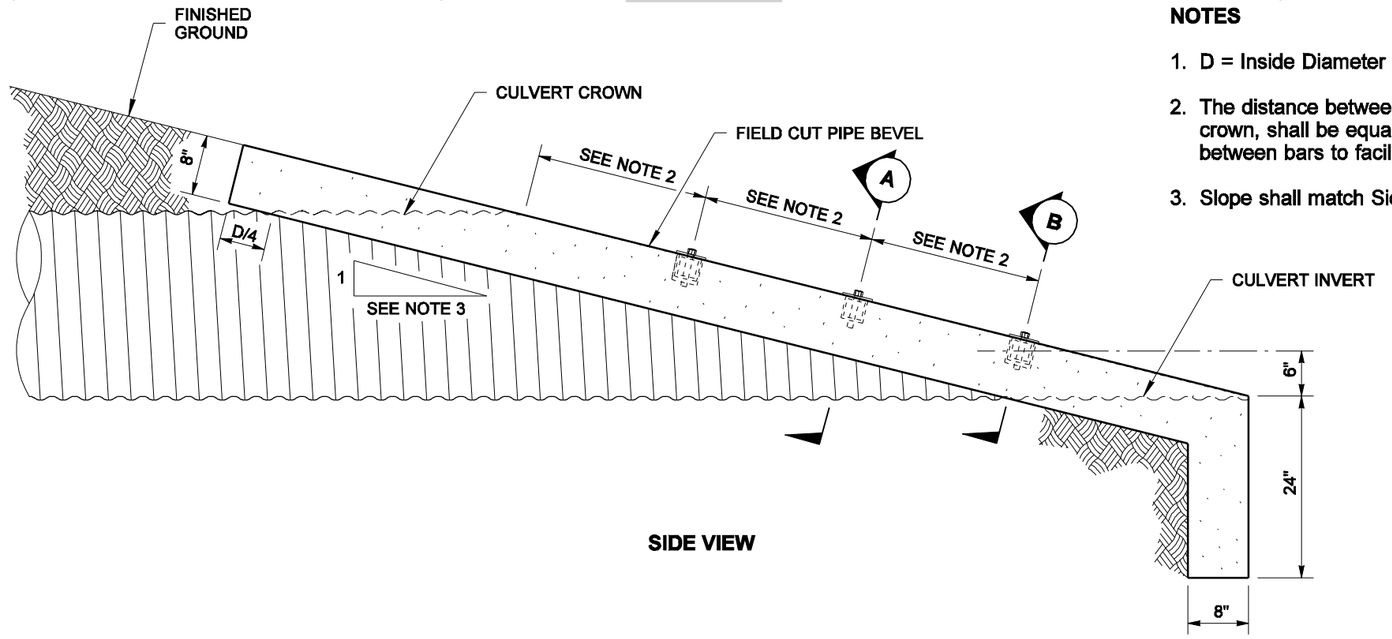

SIDE VIEW

NOTES

1. D = Inside Diameter of Culvert Pipe, or Pipe Arch Span Width, 36" maximum.
2. The distance between the safety bars, and between the top bar and the culvert crown, shall be equal spaces of no more than 24". The distance may vary ±1" between bars to facilitate placement.
3. Slope shall match Side Slope; 6H:1V preferred, not steeper than 4H:1V.

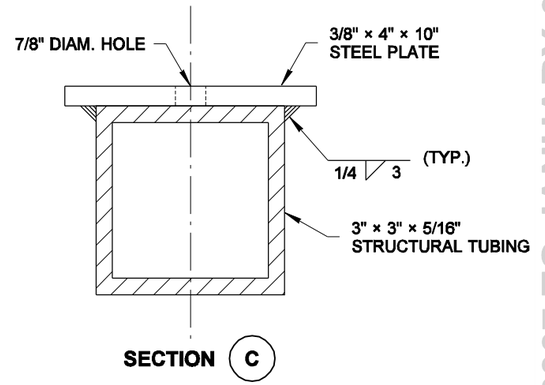

SECTION C

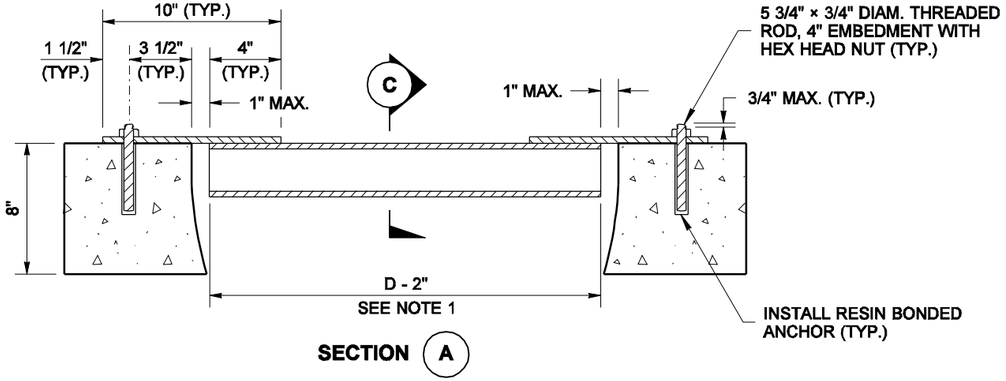

SECTION A

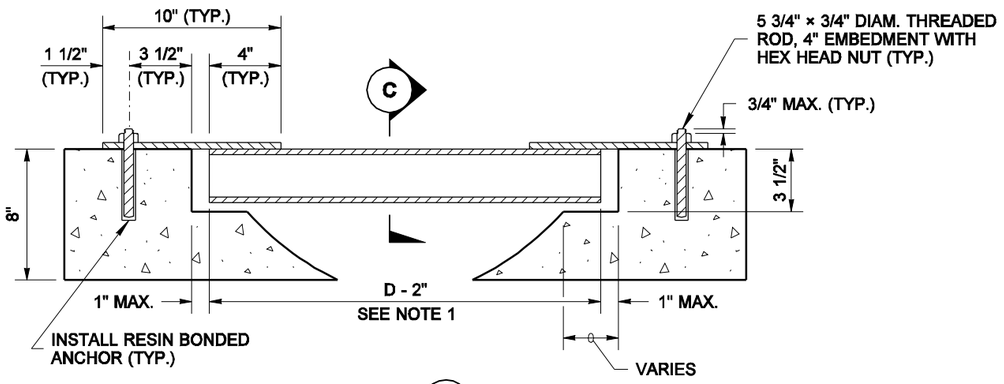

SECTION B

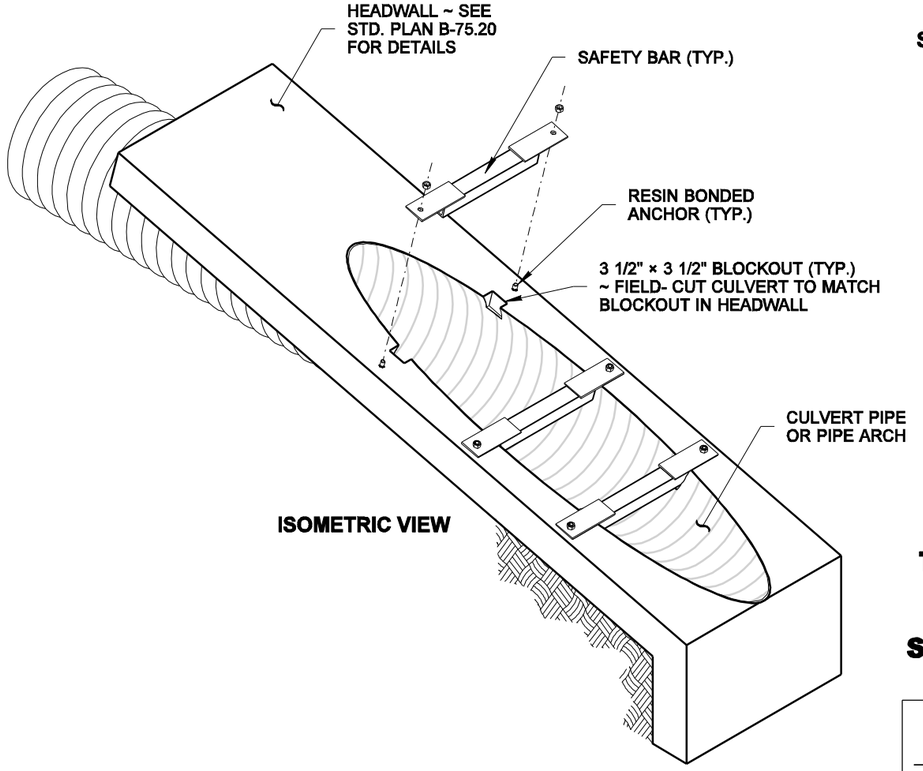

ISOMETRIC VIEW

MATTHEW J. WITECKI
STATE OF WASHINGTON
15588
REGISTERED
PROFESSIONAL ENGINEER

EXPIRES JULY 1, 2007

NOTE: THIS PLAN IS NOT A LEGAL ENGINEERING DOCUMENT BUT AN ELECTRONIC DUPLICATE. THE ORIGINAL, SIGNED BY THE ENGINEER AND APPROVED FOR PUBLICATION, IS KEPT ON FILE AT THE WASHINGTON STATE DEPARTMENT OF TRANSPORTATION. A COPY MAY BE OBTAINED UPON REQUEST.

TYPE 2 SAFETY BARS FOR CULVERT PIPE OR PIPE ARCH (ON CROSS ROAD) STANDARD PLAN B-75.60-00

SHEET 1 OF 1 SHEET

APPROVED FOR PUBLICATION

Harold J. Peterfeso — STATE DESIGN ENGINEER

06-08-06 — DATE

Washington State Department of Transportation

EFFECTIVE: APRIL 2, 2007 TO JANUARY 6, 2008

DRAWN BY: ADAM COCHRAN

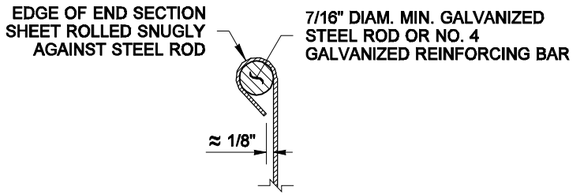

REINFORCED EDGE SECTION

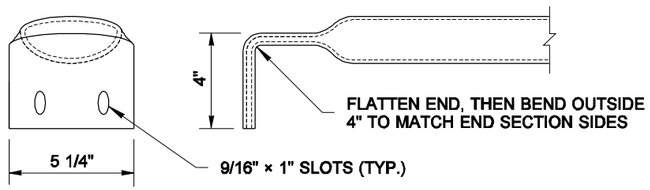

SAFETY BAR END TREATMENT DETAIL

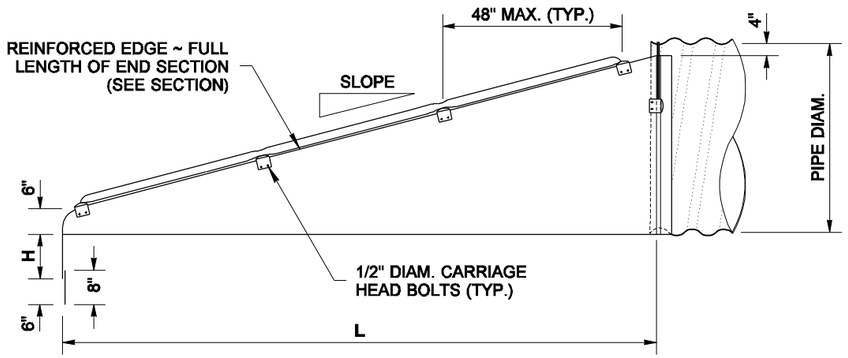

SIDE VIEW

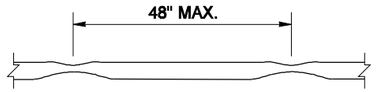

CROSS DRAINAGE BAR DETAIL

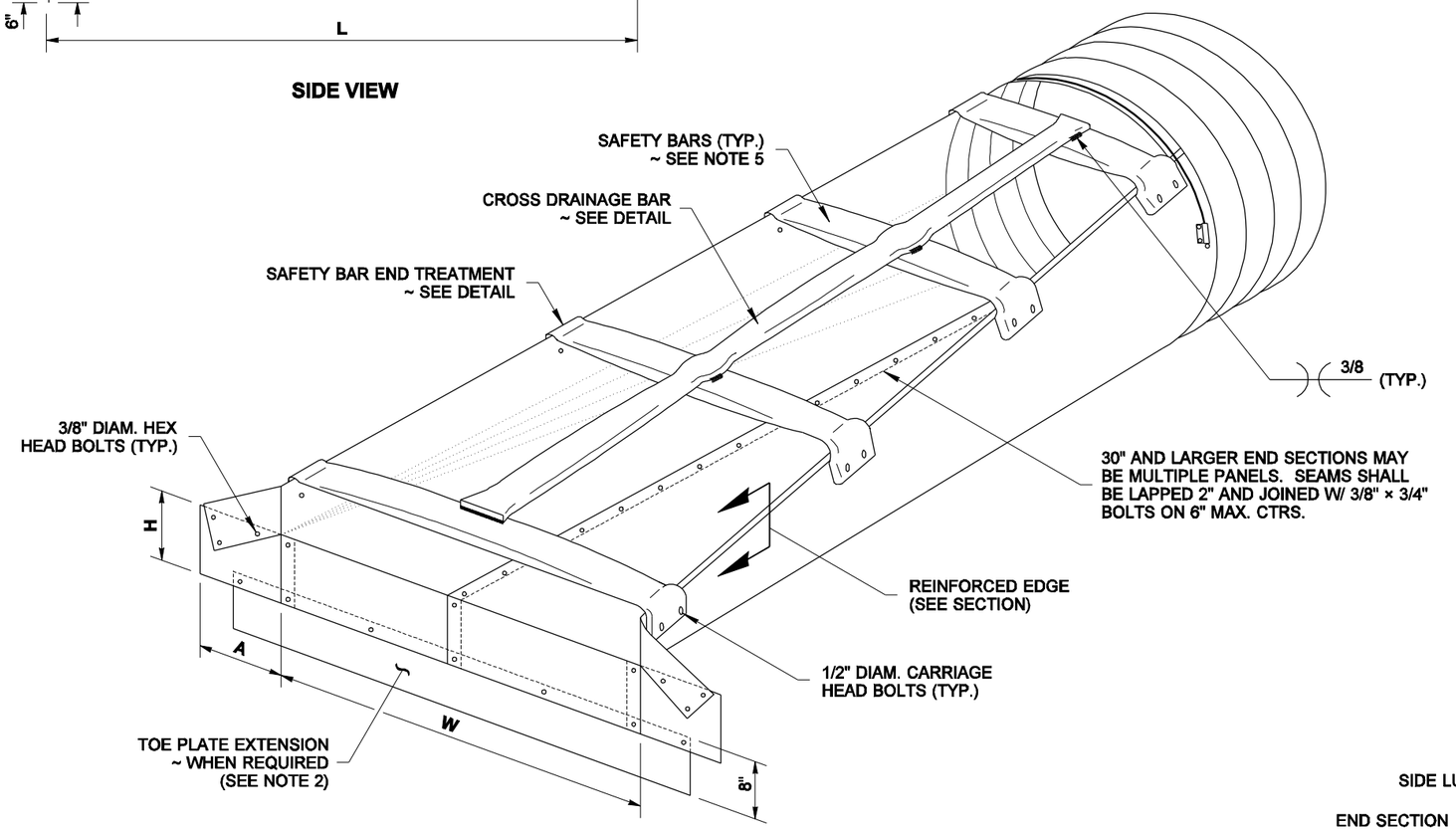

ISOMETRIC VIEW

CROSS DRAINAGE STRUCTURE

NOTES

1. All pipes or pipe arches shall be attached as shown in **CONNECTOR DETAIL**.
2. When a Toe Plate Extension is required, it shall be the same gage as the End Section. The dimensions shall be 8" high, and 6" less than the overall width. Install centered, and lapped 2"; fasten with 3/8" × 3/4" galvanized bolts on 12" maximum centers.
3. Cross Drainage Bar and Safety Bars shall be 3" Schedule 40 galvanized steel pipe. Cross Drainage Bars shall be placed a maximum 30" apart.
4. Slotted holes for safety bar attachment shall be provided on end sections.
5. Number of Safety Bars required will vary depending upon the length of the end section.

METAL END SECTIONS FOR CIRCULAR PIPES

PIPE DIAM. (INCHES)	MINIMUM THICKNESS		DIMENSIONS (INCHES)					
	INCHES	GAGE	A	H	W	OVERALL WIDTH	L SLOPE 4:1	L SLOPE 6:1
36	0.109	12	12	9	42	66	104	156
42	0.109	12	16	12	48	80	128	192
48	0.109	12	16	12	54	86	152	228
54	0.109	12	16	12	60	92	176	264
60	0.109	12	16	12	66	98	200	300

METAL END SECTIONS FOR ARCHED PIPES

EQUIV. DIAM. (INCHES)	PIPE ARCH DIMENSIONS		MINIMUM THICKNESS		DIMENSIONS (INCHES)					
	SPAN (IN.)	RISE (IN.)	INCHES	GAGE	A	H	W	OVERALL WIDTH	L SLOPE 4:1	L SLOPE 6:1
30	*35	24	0.079	14	12	9	*41	65	56	84
36	42	29	0.109	12	12	9	48	72	76	114
42	49	33	0.109	12	16	12	55	87	92	138
48	57	38	0.109	12	16	12	63	95	112	168
54	64	43	0.109	12	16	12	70	102	132	198
60	71	47	0.109	12	16	12	77	109	148	222
72	83	57	0.109	12	16	12	89	121	188	282

* SAFETY BARS ARE INSTALLED ON END SECTION WHEN SPAN IS GREATER THAN 36"

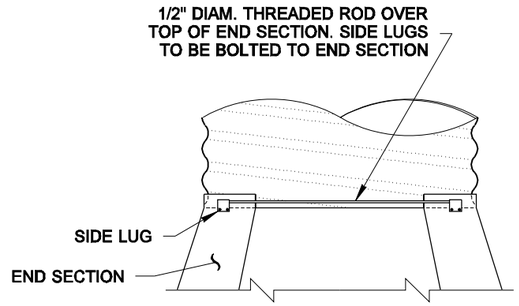

TOP VIEW

CONNECTOR DETAIL

MATTHEW J. WITECKI
STATE OF WASHINGTON
15588
REGISTERED
PROFESSIONAL ENGINEER

EXPIRES JULY 1, 2007

NOTE: THIS PLAN IS NOT A LEGAL ENGINEERING DOCUMENT BUT AN ELECTRONIC DUPLICATE. THE ORIGINAL, SIGNED BY THE ENGINEER AND APPROVED FOR PUBLICATION, IS KEPT ON FILE AT THE WASHINGTON STATE DEPARTMENT OF TRANSPORTATION. A COPY MAY BE OBTAINED UPON REQUEST.

TAPERED END SECTION WITH TYPE 3 SAFETY BARS

STANDARD PLAN B-80.20-00

SHEET 1 OF 1 SHEET

APPROVED FOR PUBLICATION

Harold J. Peterfeso — STATE DESIGN ENGINEER — *06-08-06* — DATE

Washington State Department of Transportation

EFFECTIVE: APRIL 2, 2007 TO JANUARY 6, 2008

EFFECTIVE: APRIL 2, 2007 TO JANUARY 6, 2008

DRAWN BY: ADAM COCHRAN

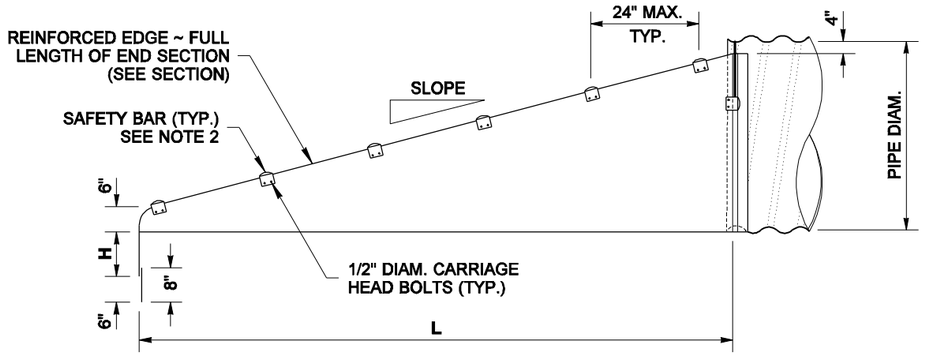

SIDE VIEW

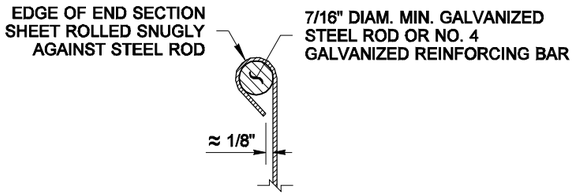

REINFORCED EDGE SECTION

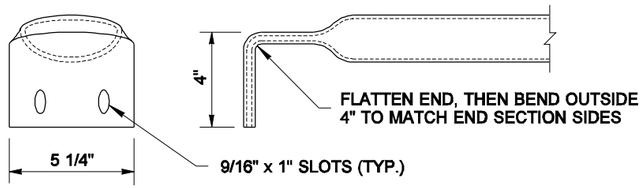

SAFETY BAR END TREATMENT DETAIL

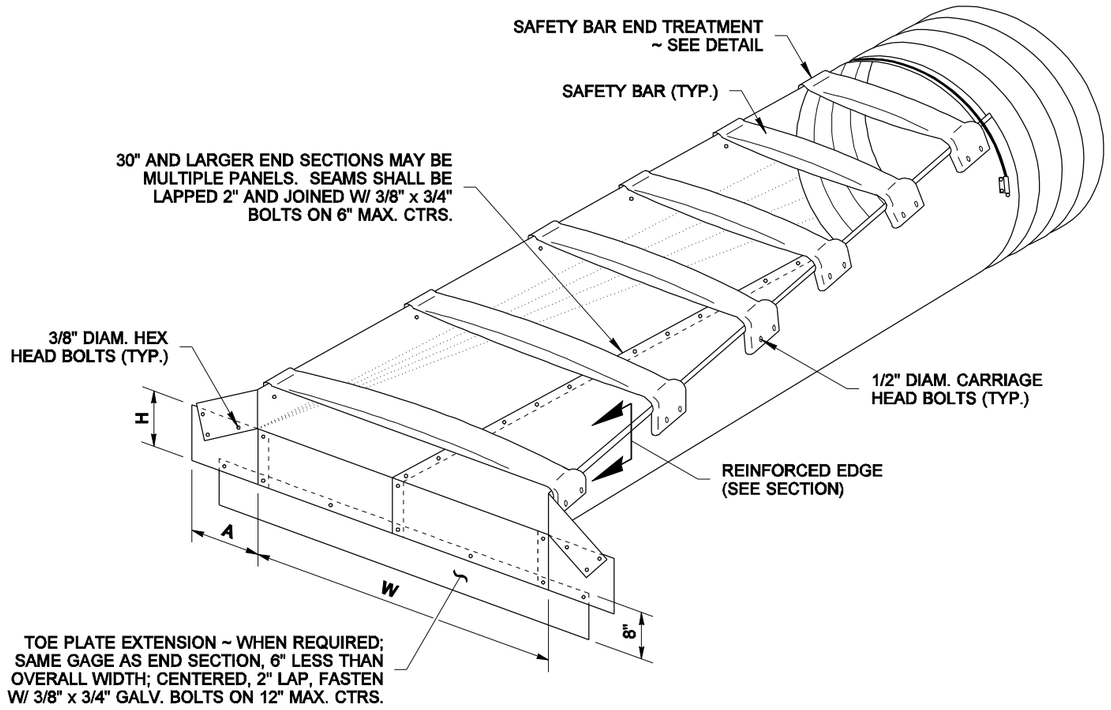

ISOMETRIC VIEW

CROSS ROAD DRAINAGE STRUCTURE

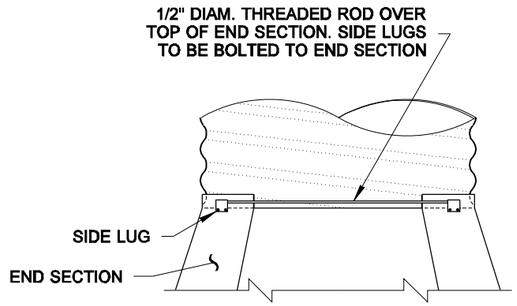

TOP VIEW

CONNECTOR DETAIL

NOTES

1. As an alternative connection on 15" through 24" pipe, a 1" wide strap of 16 gage or 12 gage galvanized steel, fastened with a 1/2" diam., 6" long galvanized bolt and square head nut, may be used.
2. Number of safety bars required will vary depending upon the length of the end section.

METAL END SECTIONS FOR CIRCULAR PIPES

PIPE DIAM. (INCHES)	MINIMUM THICKNESS		DIMENSIONS (INCHES)					
	INCHES	GAGE	A	H	W	OVERALL WIDTH	L SLOPE 4:1	L SLOPE 6:1
15	.064	16	8	6	21	37	20	30
18	.064	16	8	6	24	40	32	48
21	.064	16	8	6	27	43	44	66
24	.064	16	8	6	30	46	56	84
30	.109	12	12	9	36	60	80	120
36	.109	12	12	9	42	66	104	156
42	.109	12	16	12	48	80	128	192
48	.109	12	16	12	54	86	152	228
54	.109	12	16	12	60	92	176	264
60	.109	12	16	12	66	98	200	300

METAL END SECTIONS FOR ARCHED PIPES

EQUIV. DIAM. (INCHES)	PIPE ARCH DIMENSIONS		MINIMUM THICKNESS		DIMENSIONS (INCHES)					
	SPAN (IN.)	RISE (IN.)	INCHES	GAGE	A	H	W	OVERALL WIDTH	L SLOPE 4:1	L SLOPE 6:1
18	21	15	.064	16	8	6	27	43	20	30
21	24	18	.064	16	8	6	30	46	32	48
24	28	20	.064	16	8	6	34	50	40	60
30	35	24	.079	14	12	9	41	65	56	84
36	42	29	.109	12	12	9	48	72	76	114
42	49	33	.109	12	16	12	55	87	92	138
48	57	38	.109	12	16	12	63	95	112	168
54	64	43	.109	12	16	12	70	102	132	198
60	71	47	.109	12	16	12	77	109	148	222
72	83	57	.109	12	16	12	89	121	188	282

MATTHEW J. WITECKI
STATE OF WASHINGTON
15588
REGISTERED
PROFESSIONAL ENGINEER

EXPIRES JULY 1, 2007

NOTE: THIS PLAN IS NOT A LEGAL ENGINEERING DOCUMENT BUT AN ELECTRONIC DUPLICATE. THE ORIGINAL, SIGNED BY THE ENGINEER AND APPROVED FOR PUBLICATION, IS KEPT ON FILE AT THE WASHINGTON STATE DEPARTMENT OF TRANSPORTATION. A COPY MAY BE OBTAINED UPON REQUEST.

TAPERED END SECTION WITH TYPE 4 SAFETY BARS (ON CROSS ROAD) STANDARD PLAN B-80.40-00

SHEET 1 OF 1 SHEET

APPROVED FOR PUBLICATION

Harold J. Peterfeso — STATE DESIGN ENGINEER

06-01-06 — DATE

Washington State Department of Transportation

EFFECTIVE: APRIL 2, 2007 TO JANUARY 6, 2008

EFFECTIVE: APRIL 2, 2007 TO JANUARY 6, 2008

DRAWN BY: ADAM COCHRAN

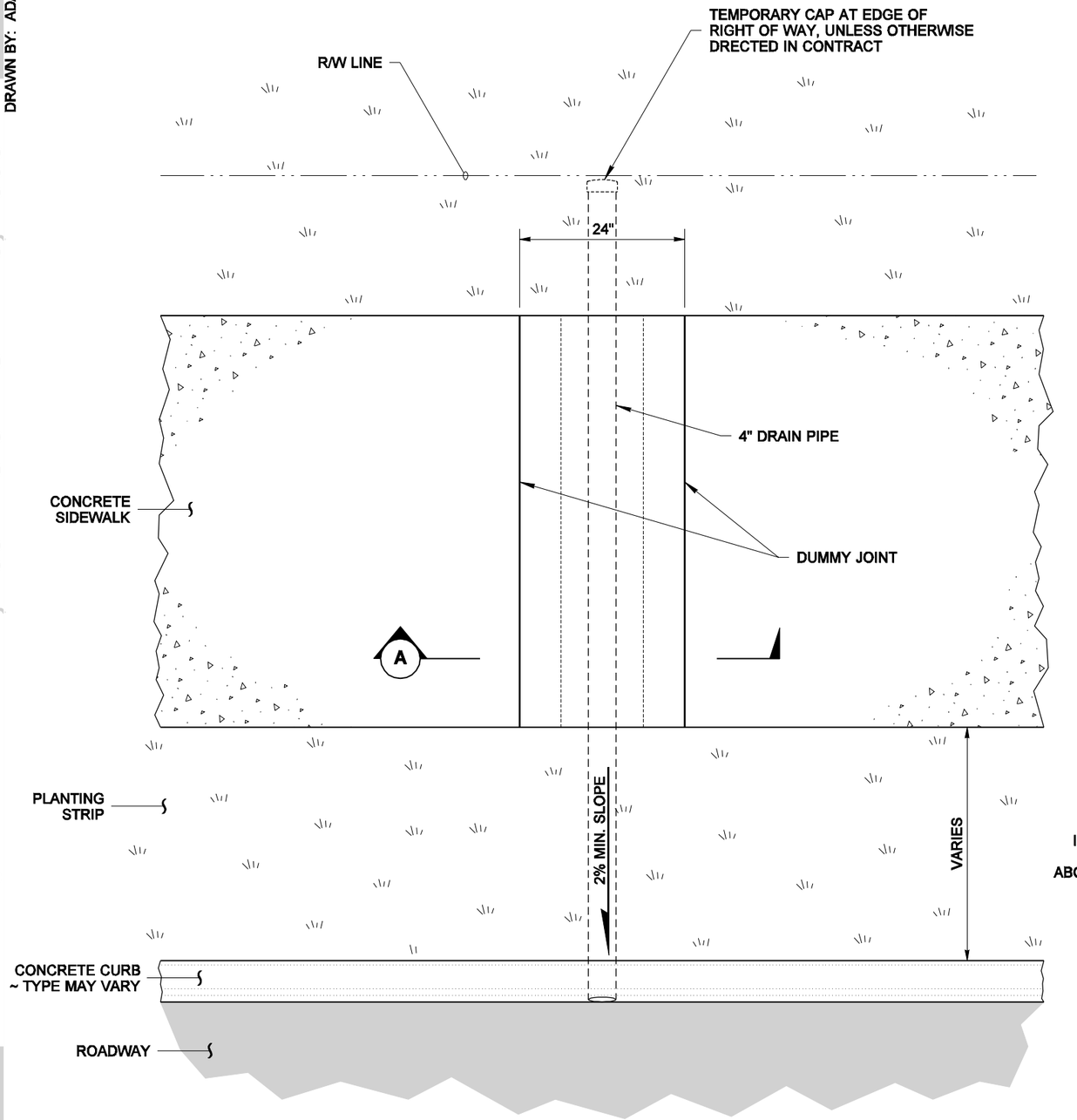

(REINFORCEMENT NOT SHOWN)

PLAN

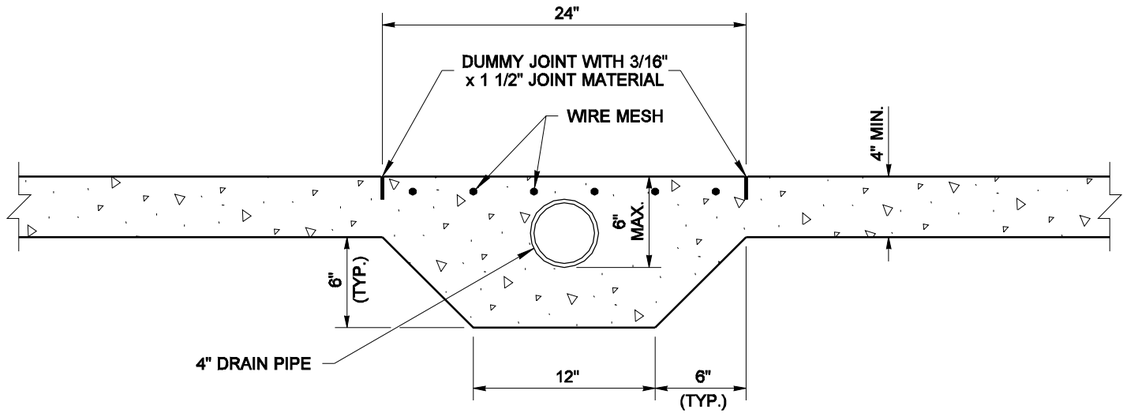

SECTION (A)

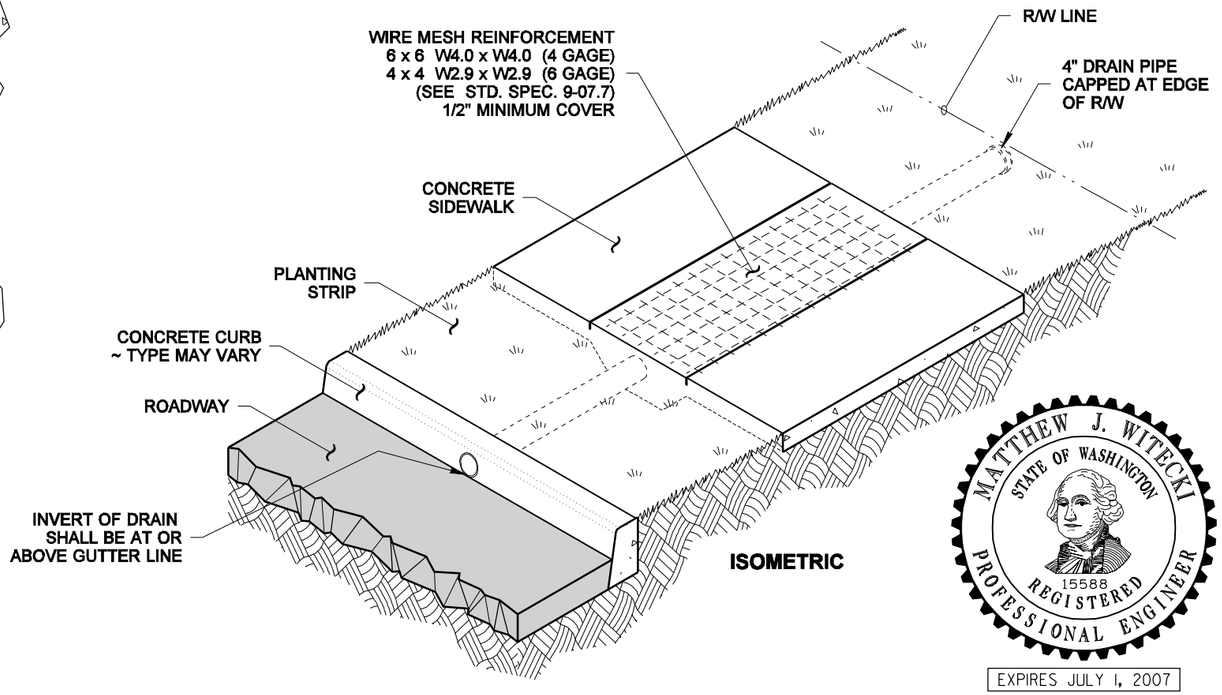

ISOMETRIC

MATTHEW J. WITECKI
STATE OF WASHINGTON
15588
REGISTERED
PROFESSIONAL ENGINEER

EXPIRES JULY 1, 2007

NOTE: THIS PLAN IS NOT A LEGAL ENGINEERING DOCUMENT BUT AN ELECTRONIC DUPLICATE. THE ORIGINAL, SIGNED BY THE ENGINEER AND APPROVED FOR PUBLICATION, IS KEPT ON FILE AT THE WASHINGTON STATE DEPARTMENT OF TRANSPORTATION. A COPY MAY BE OBTAINED UPON REQUEST.

RESIDENTIAL STORM DRAIN, UNDER SIDEWALK

STANDARD PLAN B-82.20-00

SHEET 1 OF 1 SHEET

APPROVED FOR PUBLICATION

Harold J. Peterfeso — STATE DESIGN ENGINEER — *06-01-06* — DATE

Washington State Department of Transportation

EFFECTIVE: APRIL 2, 2007 TO JANUARY 6, 2008

EFFECTIVE: APRIL 2, 2007 TO JANUARY 6, 2008

DRAWN BY: ADAM COCHRAN

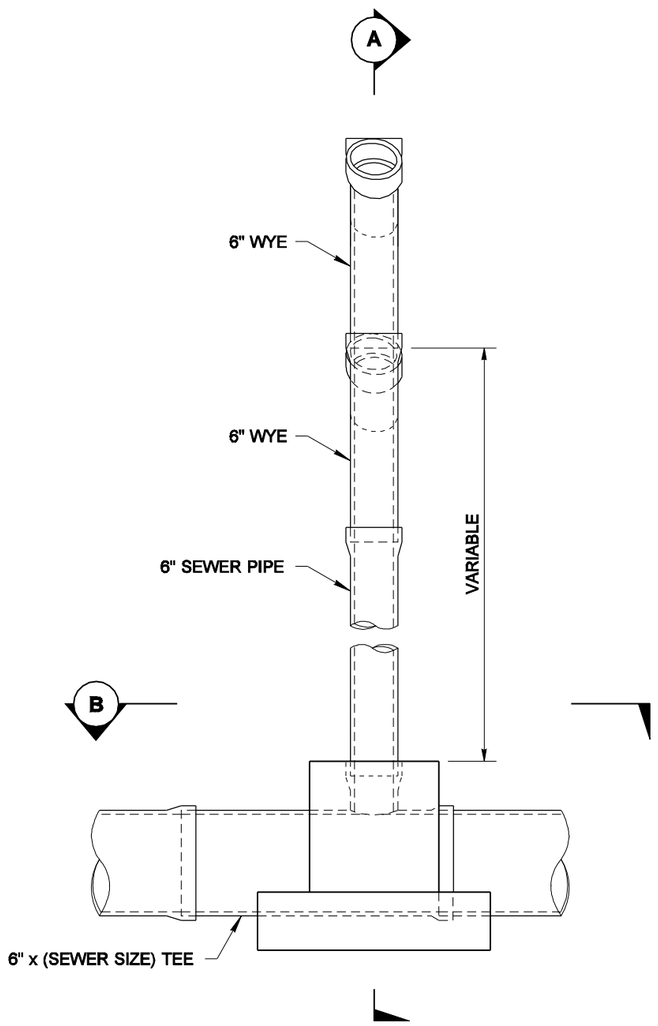

ELEVATION

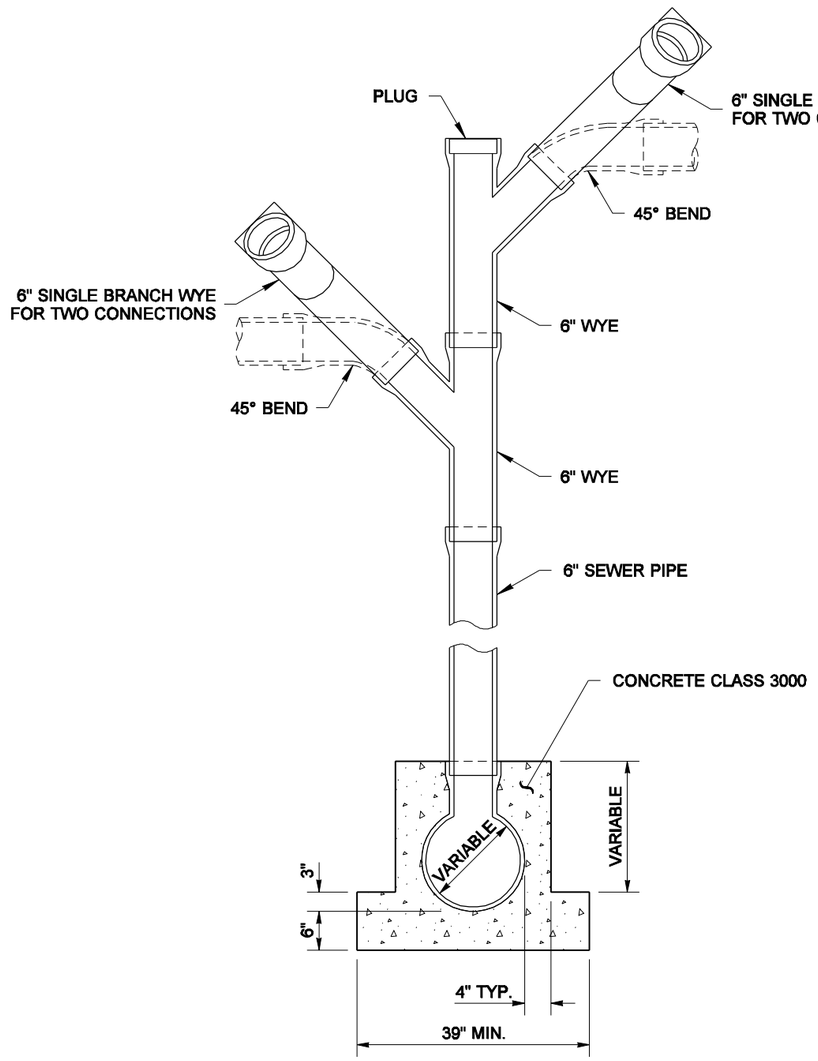

SECTION A

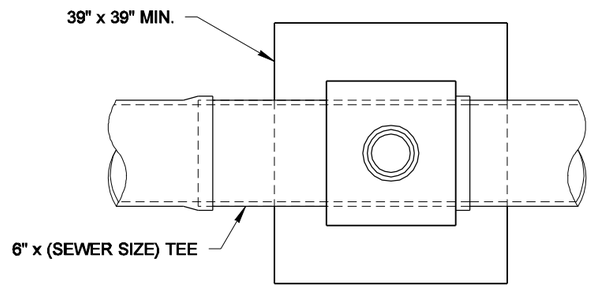

SECTION B

FOR SANITARY SEWER USE

MATTHEW J. WITECKI
STATE OF WASHINGTON
15588
REGISTERED
PROFESSIONAL ENGINEER

EXPIRES JULY 1, 2007

NOTE: THIS PLAN IS NOT A LEGAL ENGINEERING DOCUMENT BUT AN ELECTRONIC DUPLICATE. THE ORIGINAL, SIGNED BY THE ENGINEER AND APPROVED FOR PUBLICATION, IS KEPT ON FILE AT THE WASHINGTON STATE DEPARTMENT OF TRANSPORTATION. A COPY MAY BE OBTAINED UPON REQUEST.

VERTICAL CONNECTION

STANDARD PLAN B-85.10-00

SHEET 1 OF 1 SHEET

APPROVED FOR PUBLICATION

Harold J. Peterfeso — STATE DESIGN ENGINEER

06-01-06 — DATE

Washington State Department of Transportation

EFFECTIVE: APRIL 2, 2007 TO JANUARY 6, 2008

EFFECTIVE: APRIL 2, 2007 TO JANUARY 6, 2008

DRAWN BY: ADAM COCHRAN

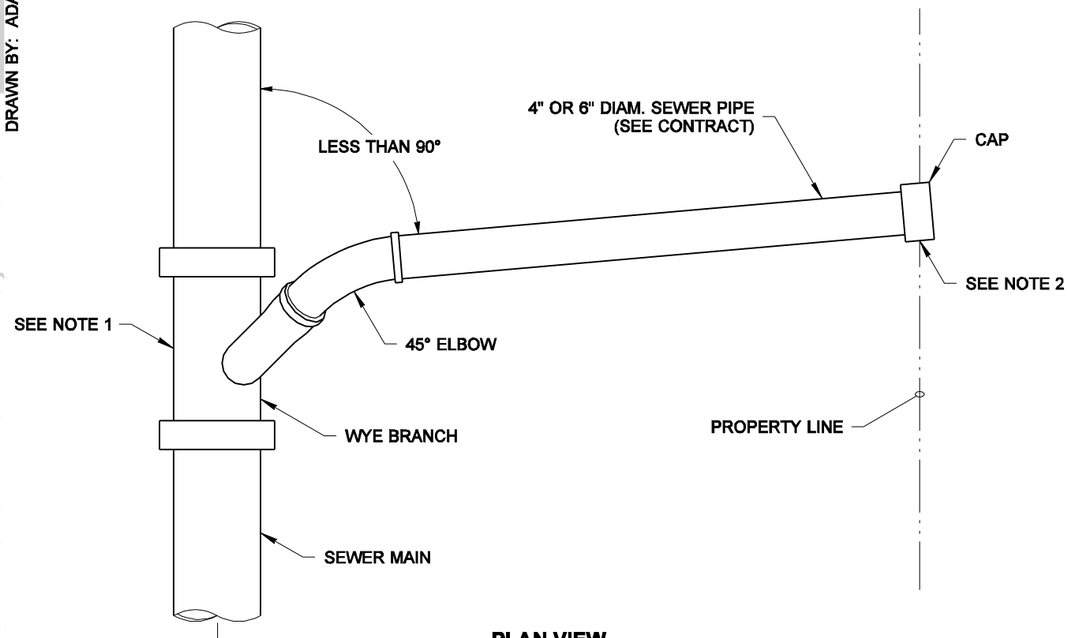

PLAN VIEW

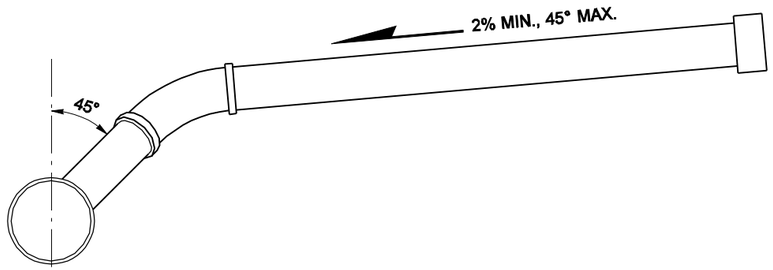

ELEVATION VIEW

WYE CONNECTION

NOTES

1. Install sewer saddle with gasket and stainless steel clamps for connection to existing sewers. Install wye or tee sewer fitting with gaskets for new sewer installations.
2. Mark location of sewer stub in accordance with Contracting Agency requirements.

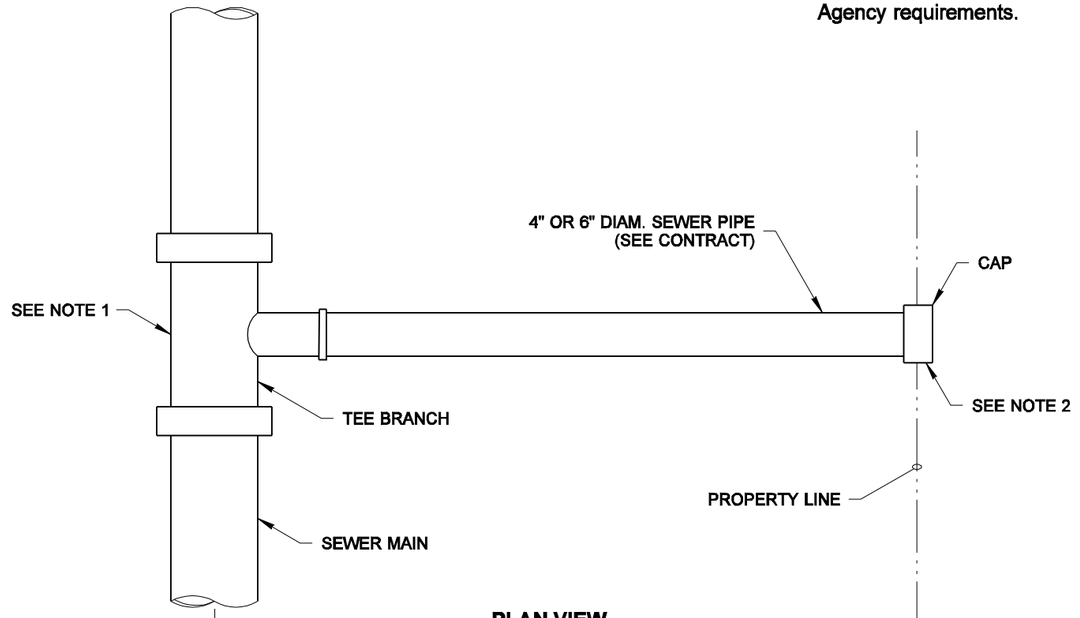

PLAN VIEW

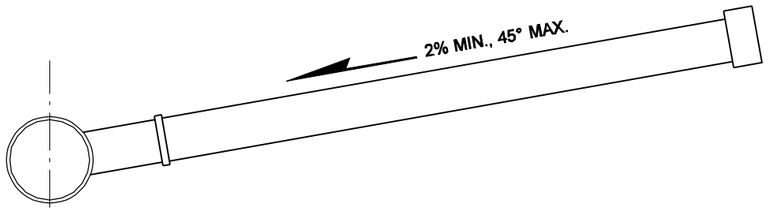

ELEVATION VIEW

TEE CONNECTION

FOR SANITARY SEWER USE

MATTHEW J. WITECKI
STATE OF WASHINGTON
15588
REGISTERED
PROFESSIONAL ENGINEER

EXPIRES JULY 1, 2007

NOTE: THIS PLAN IS NOT A LEGAL ENGINEERING DOCUMENT BUT AN ELECTRONIC DUPLICATE. THE ORIGINAL, SIGNED BY THE ENGINEER AND APPROVED FOR PUBLICATION, IS KEPT ON FILE AT THE WASHINGTON STATE DEPARTMENT OF TRANSPORTATION. A COPY MAY BE OBTAINED UPON REQUEST.

SIDE SEWER CONNECTION

STANDARD PLAN B-85.20-00

SHEET 1 OF 1 SHEET

APPROVED FOR PUBLICATION

Harold J. Peterfeso — STATE DESIGN ENGINEER

06-01-06 — DATE

Washington State Department of Transportation

EFFECTIVE: APRIL 2, 2007 TO JANUARY 6, 2008

EFFECTIVE: APRIL 2, 2007 TO JANUARY 6, 2008
EFFECTIVE: APRIL 2, 2007 TO JANUARY 6, 2008

DRAWN BY: ADAM COCHRAN

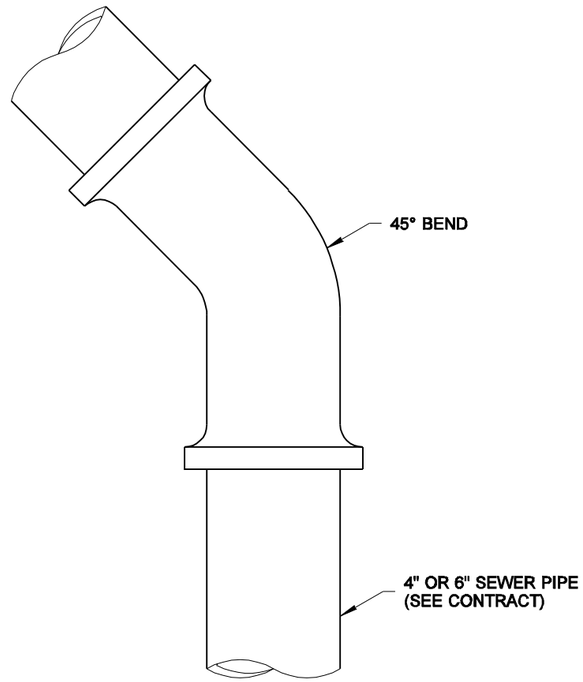

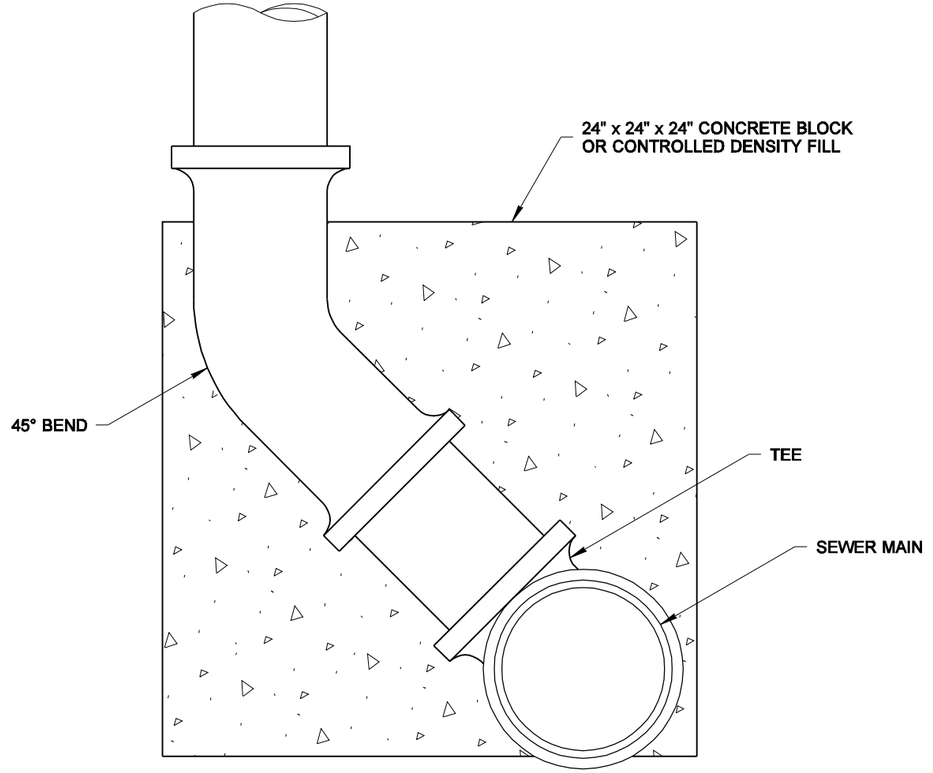

FOR SANITARY SEWER USE

MATTHEW J. WITECKI
STATE OF WASHINGTON
15588
REGISTERED
PROFESSIONAL ENGINEER

EXPIRES JULY 1, 2007

NOTE: THIS PLAN IS NOT A LEGAL ENGINEERING DOCUMENT BUT AN ELECTRONIC DUPLICATE. THE ORIGINAL, SIGNED BY THE ENGINEER, AND APPROVED FOR PUBLICATION, IS KEPT ON FILE AT THE WASHINGTON STATE DEPARTMENT OF TRANSPORTATION. A COPY MAY BE OBTAINED UPON REQUEST.

STANDING SIDE SEWER CONNECTION

STANDARD PLAN B-85.30-00

SHEET 1 OF 1 SHEET

APPROVED FOR PUBLICATION

Harold J. Peterfeso — STATE DESIGN ENGINEER

06-01-06 — DATE

Washington State Department of Transportation

EFFECTIVE: APRIL 2, 2007 TO JANUARY 6, 2008
EFFECTIVE: APRIL 2, 2007 TO JANUARY 6, 2008

EFFECTIVE: APRIL 2, 2007 TO JANUARY 6, 2008

DRAWN BY: ADAM COCHRAN

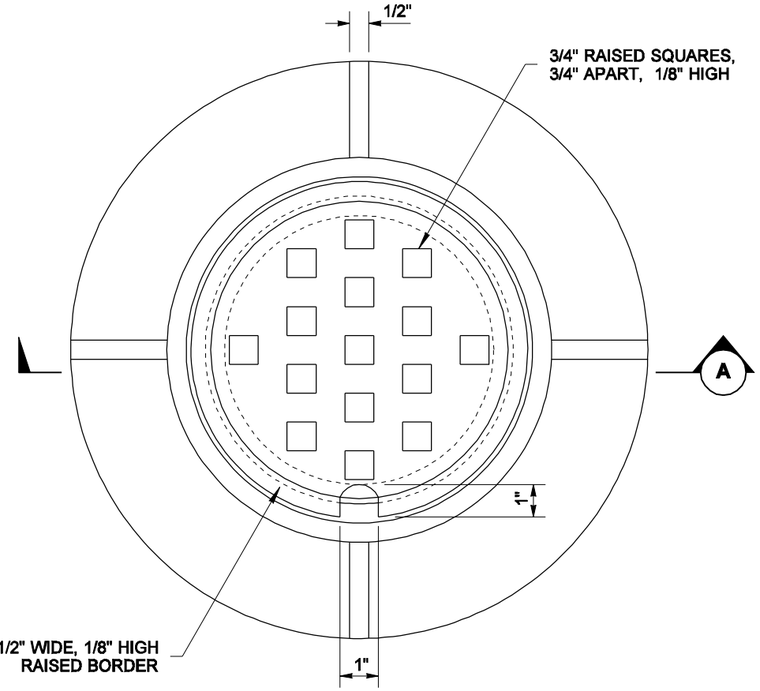

PLAN

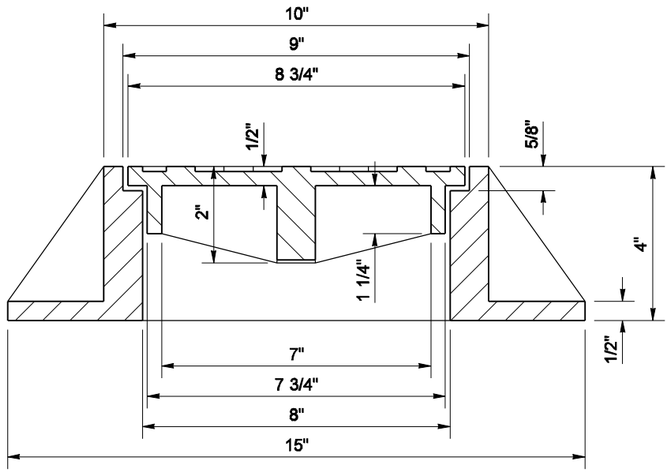

SECTION (A)

CAST IRON RING AND COVER

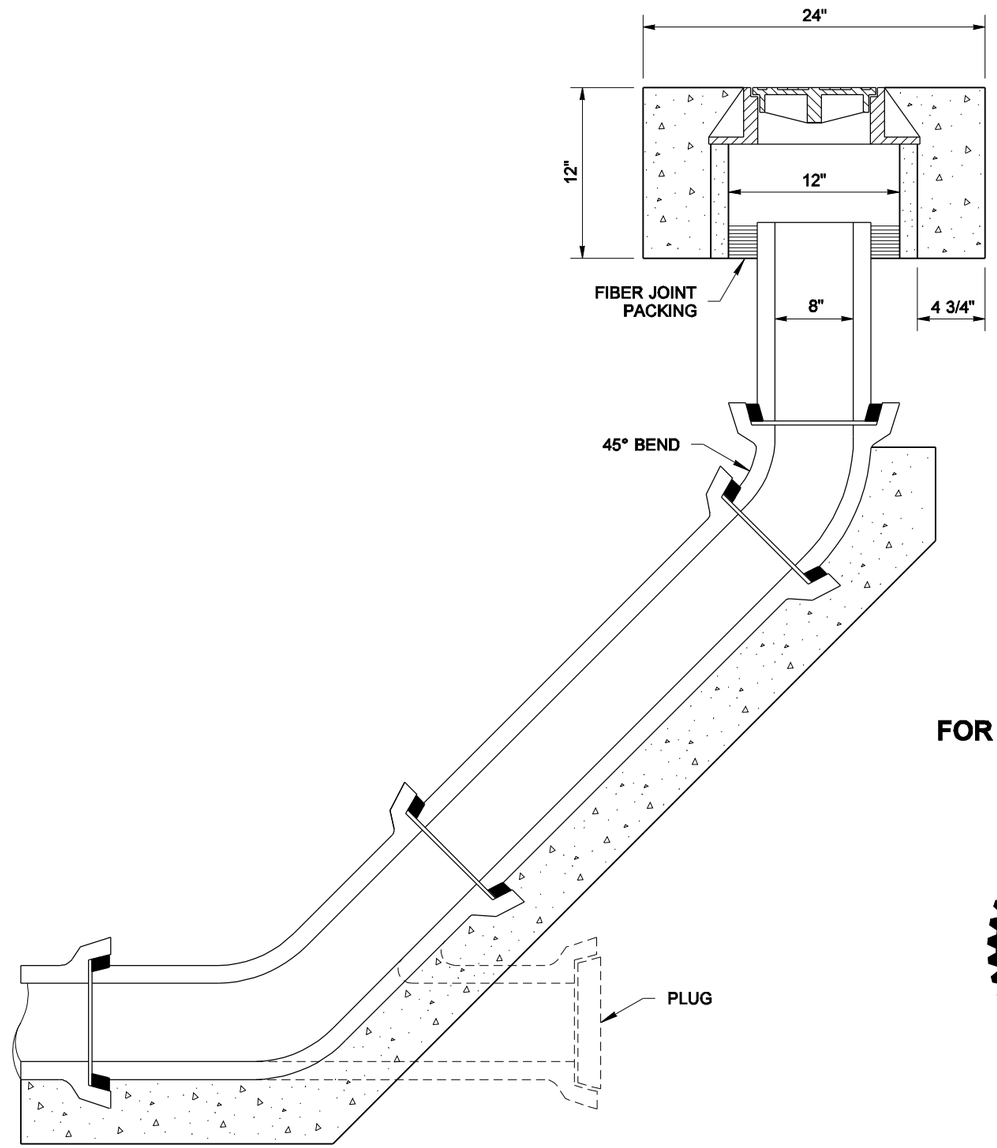

FOR SANITARY SEWER USE

MATTHEW J. WITECKI
STATE OF WASHINGTON
15588
REGISTERED
PROFESSIONAL ENGINEER

EXPIRES JULY 1, 2007

NOTE: THIS PLAN IS NOT A LEGAL ENGINEERING DOCUMENT BUT AN ELECTRONIC DUPLICATE. THE ORIGINAL, SIGNED BY THE ENGINEER AND APPROVED FOR PUBLICATION, IS KEPT ON FILE AT THE WASHINGTON STATE DEPARTMENT OF TRANSPORTATION. A COPY MAY BE OBTAINED UPON REQUEST.

8 INCH SEWER CLEAN-OUT

STANDARD PLAN B-85.40-00

SHEET 1 OF 1 SHEET

APPROVED FOR PUBLICATION

Harold J. Peterfeso — STATE DESIGN ENGINEER — *06-08-06* — DATE

Washington State Department of Transportation

EFFECTIVE: APRIL 2, 2007 TO JANUARY 6, 2008

EFFECTIVE: APRIL 2, 2007 TO JANUARY 6, 2008

EFFECTIVE: APRIL 2, 2007 TO JANUARY 6, 2008

DRAWN BY: ADAM COCHRAN

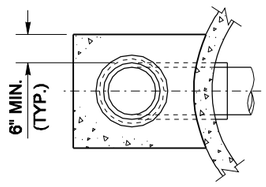

SECTION (A)

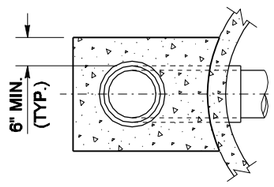

SECTION (B)

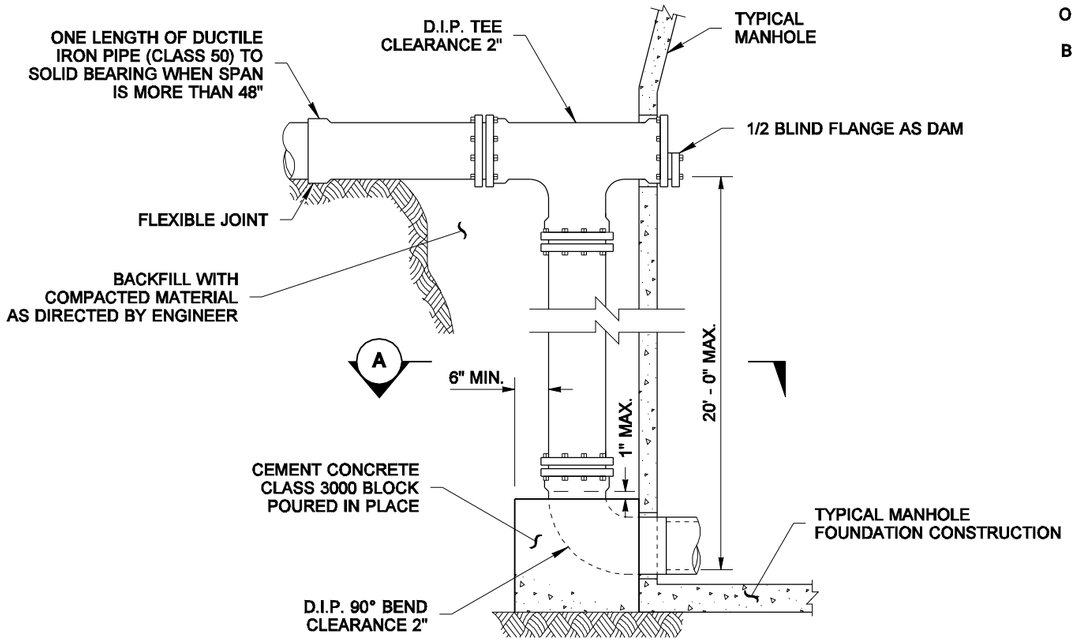

ELEVATION

DUCTILE IRON DROP CONNECTION

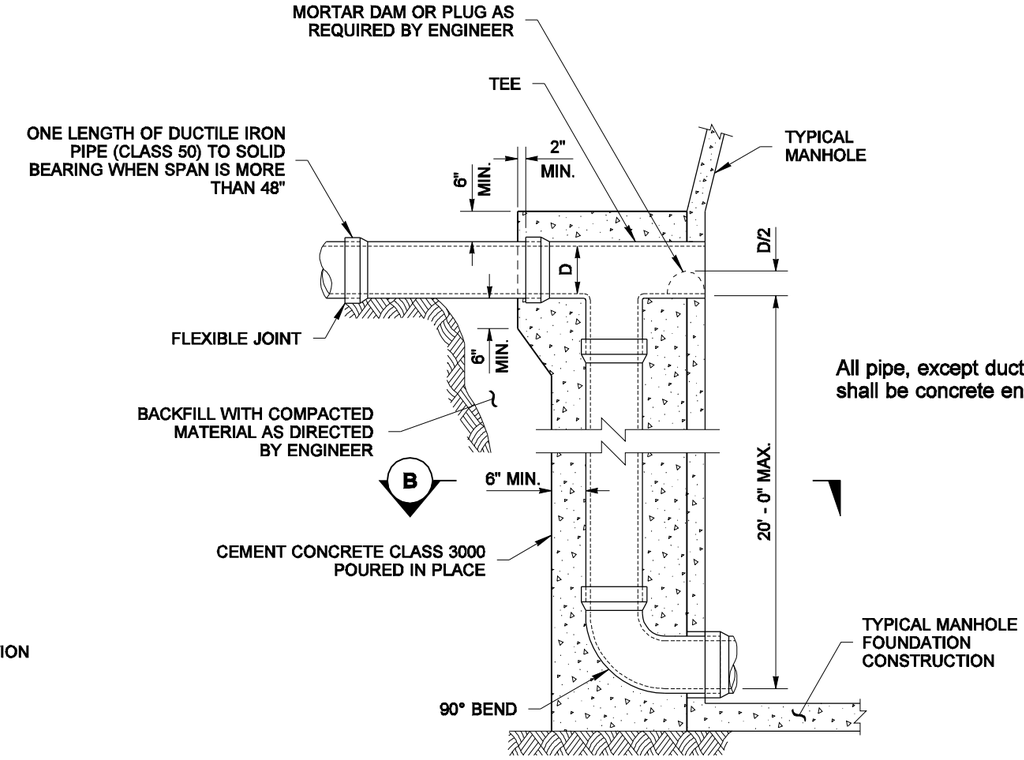

ELEVATION

CONCRETE ENCASED DROP CONNECTION

All pipe, except ductile iron pipe, shall be concrete encased.

FOR SANITARY SEWER USE

MATTHEW J. WITECKI
STATE OF WASHINGTON
15588
REGISTERED
PROFESSIONAL ENGINEER

EXPIRES JULY 1, 2007

NOTE: THIS PLAN IS NOT A LEGAL ENGINEERING DOCUMENT BUT AN ELECTRONIC DUPLICATE. THE ORIGINAL, SIGNED BY THE ENGINEER AND APPROVED FOR PUBLICATION, IS KEPT ON FILE AT THE WASHINGTON STATE DEPARTMENT OF TRANSPORTATION. A COPY MAY BE OBTAINED UPON REQUEST.

DROP CONNECTIONS

STANDARD PLAN B-85.50-00

SHEET 1 OF 1 SHEET

APPROVED FOR PUBLICATION

Harold J. Peterfeso — STATE DESIGN ENGINEER

06-08-06 — DATE

Washington State Department of Transportation

EFFECTIVE: APRIL 2, 2007 TO JANUARY 6, 2008

EFFECTIVE: APRIL 2, 2007 TO JANUARY 6, 2008

EFFECTIVE: APRIL 2, 2007 TO JANUARY 6, 2008

DRAWN BY: MARK SUJKA

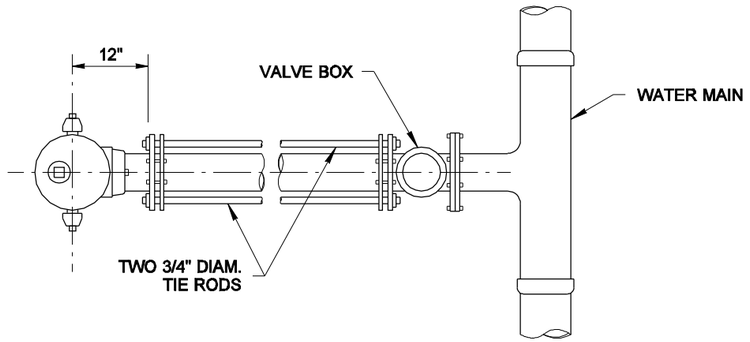

PLAN

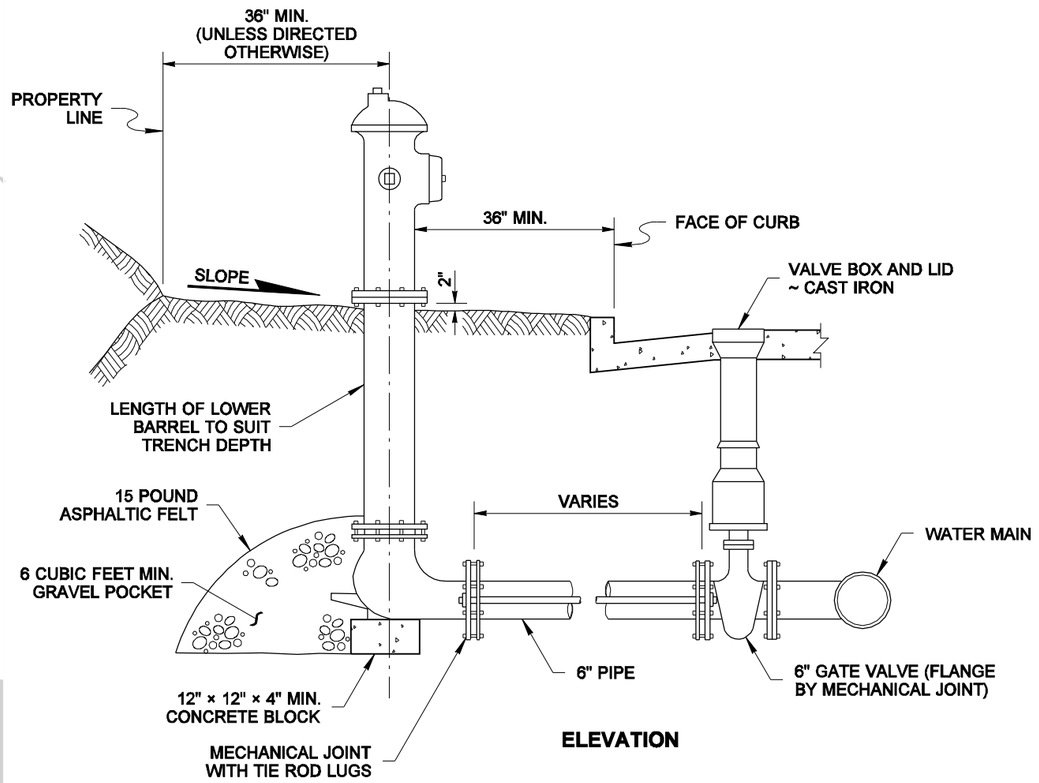

ELEVATION

TYPE A

EFFECTIVE: APRIL 2, 2007 TO JANUARY 6, 2008

NOTES

1. Steel tie rods to be heavily coated with asphalt after installation.
2. Restrained joints may be substituted for tie rods.
3. Surface of ground within 36" of hydrant shall be smooth.

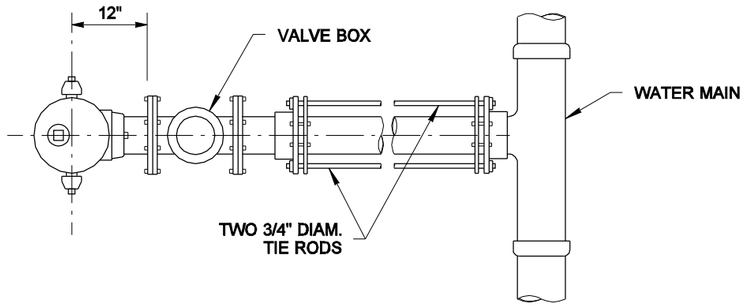

PLAN

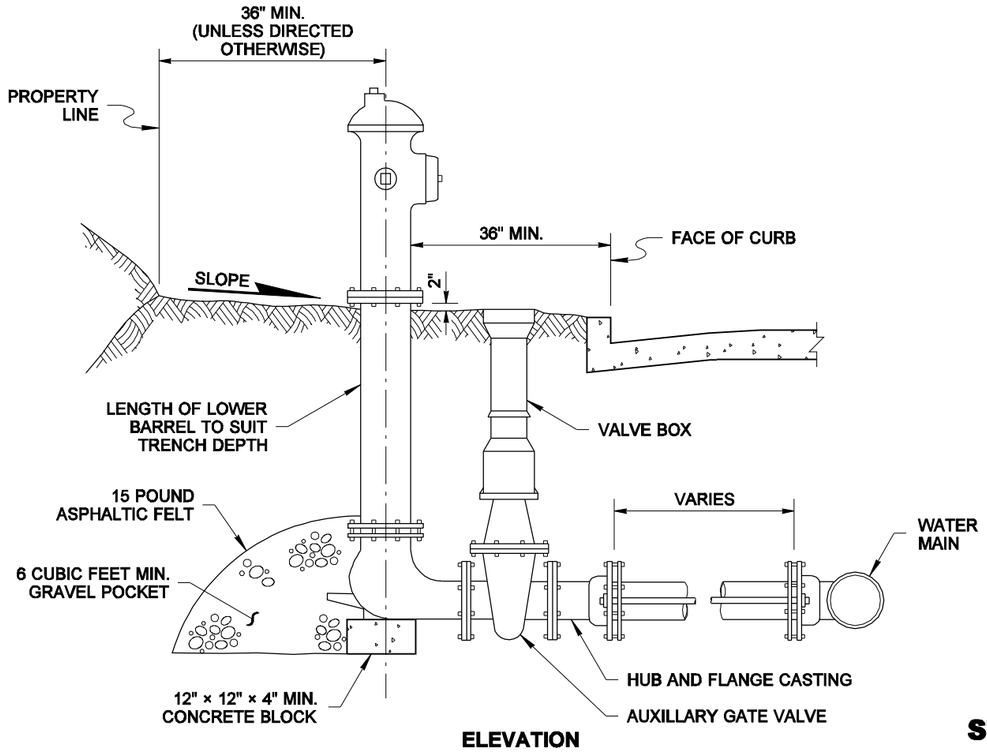

ELEVATION

TYPE B

MATTHEW J. WITECKI
STATE OF WASHINGTON
15588
REGISTERED
PROFESSIONAL ENGINEER

EXPIRES JULY 1, 2007

NOTE: THIS PLAN IS NOT A LEGAL ENGINEERING DOCUMENT BUT AN ELECTRONIC DUPLICATE. THE ORIGINAL, SIGNED BY THE ENGINEER AND APPROVED FOR PUBLICATION, IS KEPT ON FILE AT THE WASHINGTON STATE DEPARTMENT OF TRANSPORTATION. A COPY MAY BE OBTAINED UPON REQUEST.

HYDRANT SETTING TYPES A AND B

STANDARD PLAN B-90.10-00

SHEET 1 OF 1 SHEET

APPROVED FOR PUBLICATION

Harold J. Peterfeso — STATE DESIGN ENGINEER

06-08-06 — DATE

Washington State Department of Transportation

EFFECTIVE: APRIL 2, 2007 TO JANUARY 6, 2008

EFFECTIVE: APRIL 2, 2007 TO JANUARY 6, 2008

DRAWN BY: MARK SUJKA

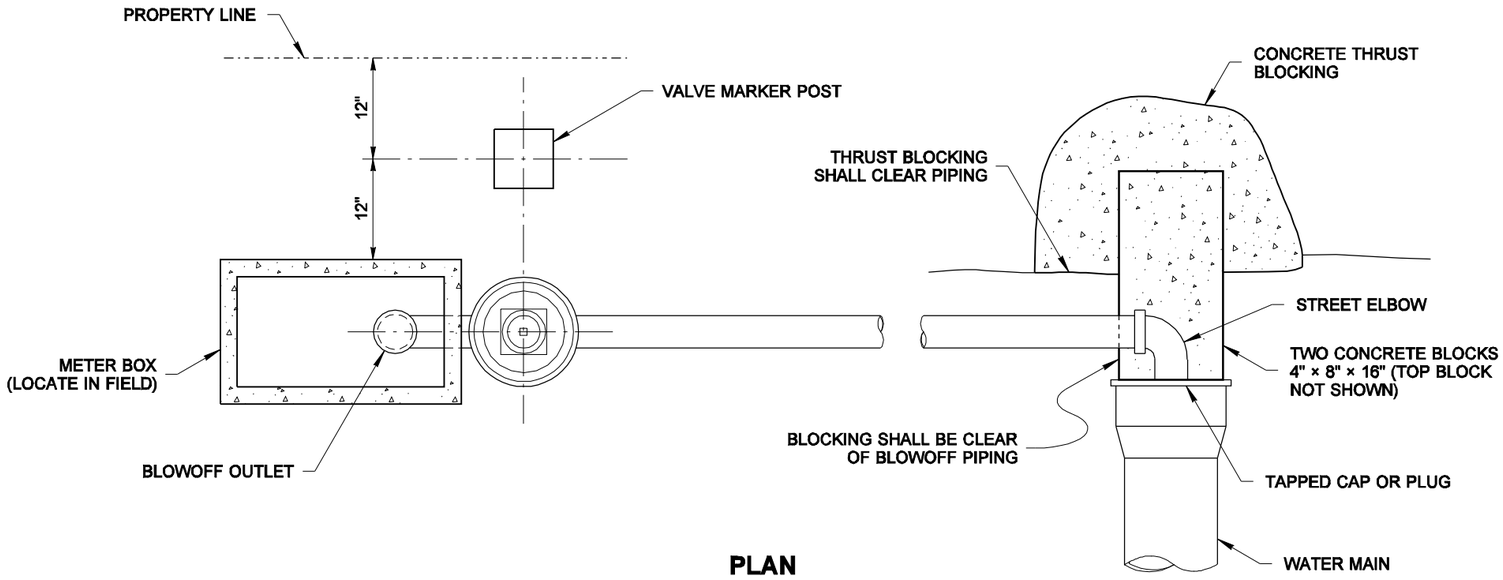

PLAN

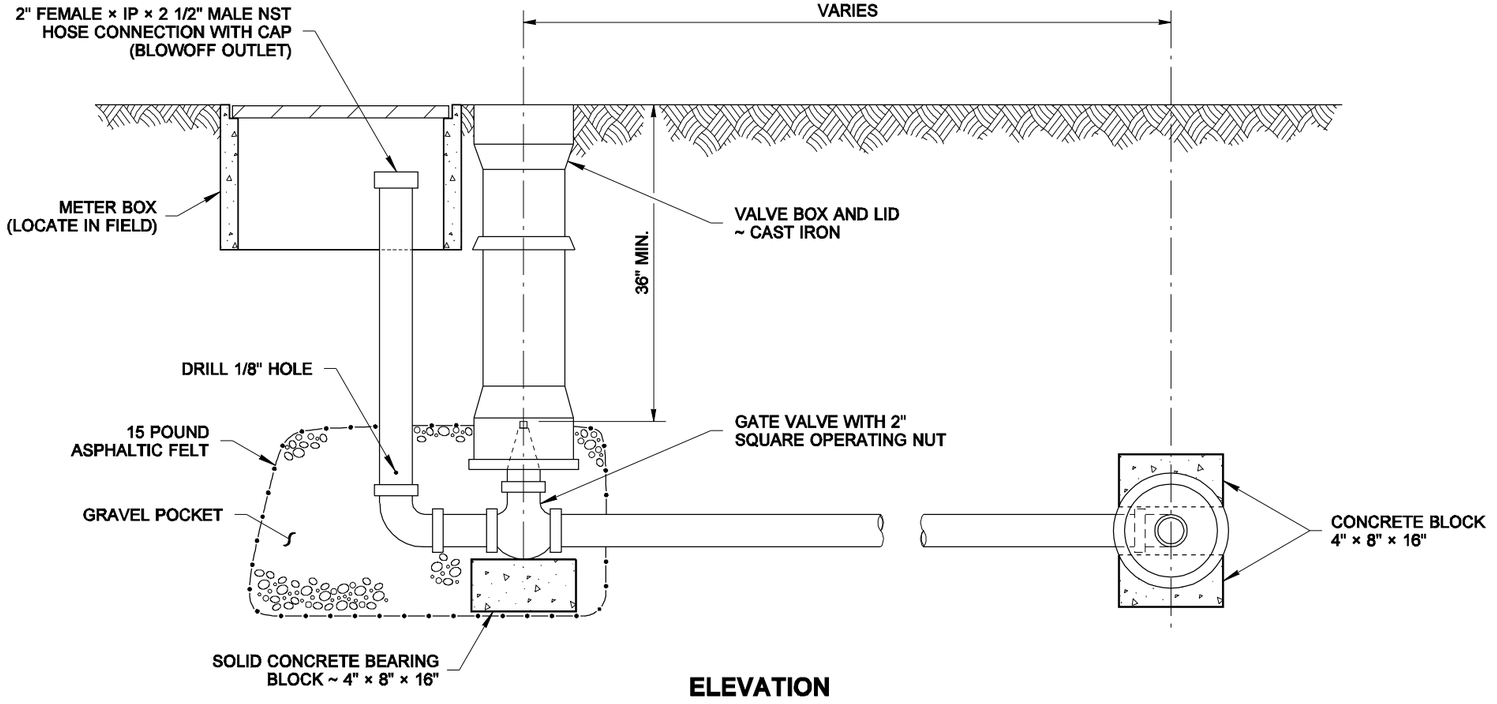

ELEVATION

NOTES

1. Coat the pipe threads with asphalt after assembly.
2. All piping shall be galvanized steel.
3. Valve and piping to valve shall be 2" unless otherwise noted in the Contract.
4. Locate blowoff outlet near property corner if possible.

MATTHEW J. WITECKI
STATE OF WASHINGTON
15588
REGISTERED
PROFESSIONAL ENGINEER

EXPIRES JULY 1, 2007

NOTE: THIS PLAN IS NOT A LEGAL ENGINEERING DOCUMENT BUT AN ELECTRONIC DUPLICATE. THE ORIGINAL, SIGNED BY THE ENGINEER AND APPROVED FOR PUBLICATION, IS KEPT ON FILE AT THE WASHINGTON STATE DEPARTMENT OF TRANSPORTATION. A COPY MAY BE OBTAINED UPON REQUEST.

2 INCH BLOWOFF ASSEMBLY

STANDARD PLAN B-90.20-00

SHEET 1 OF 1 SHEET

APPROVED FOR PUBLICATION

Harold J. Peterfeso — STATE DESIGN ENGINEER — *06-08-06* — DATE

Washington State Department of Transportation

EFFECTIVE: APRIL 2, 2007 TO JANUARY 6, 2008

EFFECTIVE: APRIL 2, 2007 TO JANUARY 6, 2008
EFFECTIVE: APRIL 2, 2007 TO JANUARY 6, 2008

DRAWN BY: ADAM COCHRAN

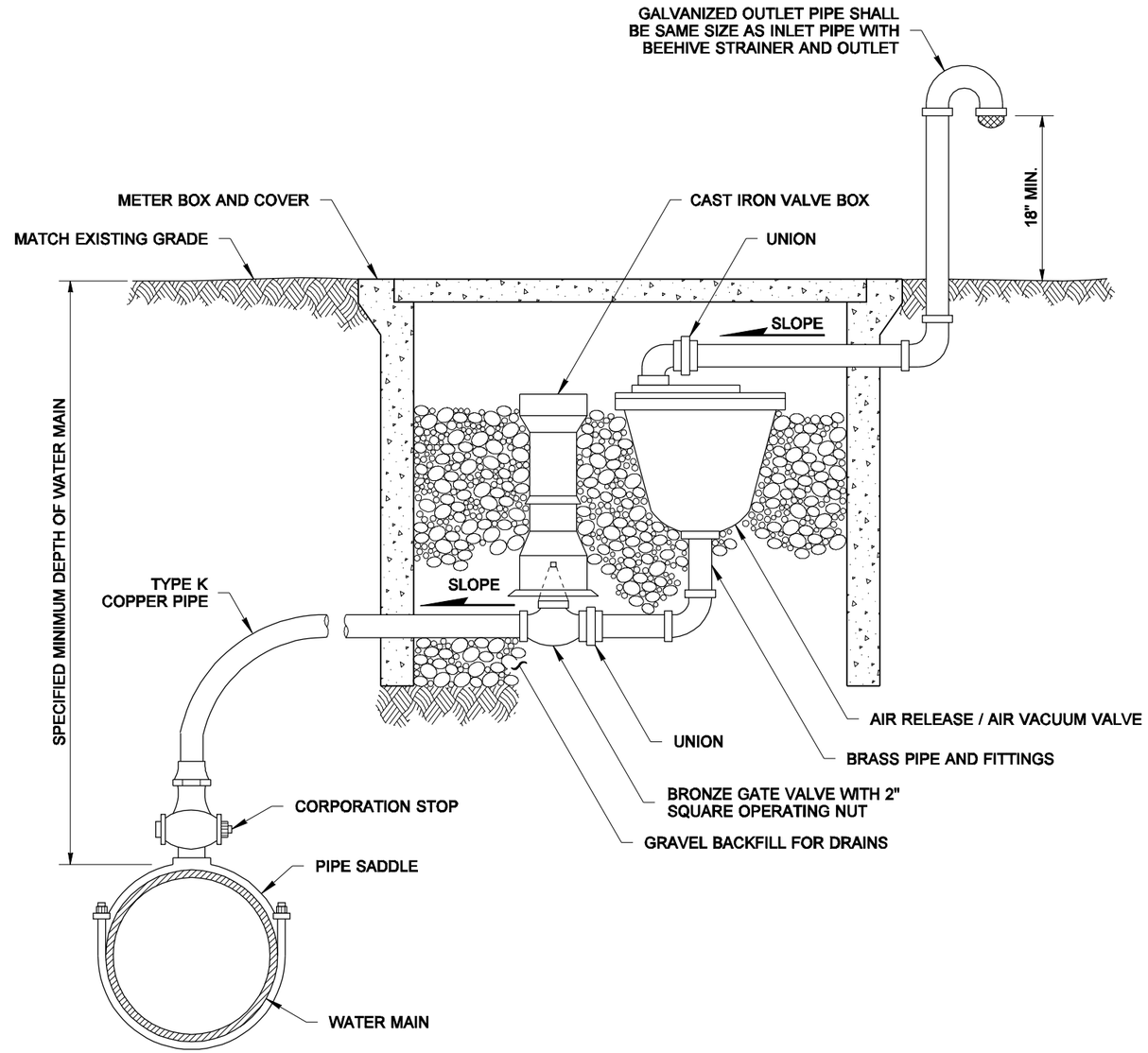

NOTES

1. The size of the combination air release / air vacuum valve shall be specified in the Contract. The piping and valves shall be the same size as the combination air release / air vacuum valve.
2. Locate at the high point of the main, tap top of main.

MATTHEW J. WITECKI
STATE OF WASHINGTON
15588
REGISTERED
PROFESSIONAL ENGINEER

EXPIRES JULY 1, 2007

NOTE: THIS PLAN IS NOT A LEGAL ENGINEERING DOCUMENT BUT AN ELECTRONIC DUPLICATE. THE ORIGINAL, SIGNED BY THE ENGINEER AND APPROVED FOR PUBLICATION, IS KEPT ON FILE AT THE WASHINGTON STATE DEPARTMENT OF TRANSPORTATION. A COPY MAY BE OBTAINED UPON REQUEST.

COMBINATION AIR RELEASE / AIR VACUUM VALVE ASSEMBLY

STANDARD PLAN B-90.30-00

SHEET 1 OF 1 SHEET

APPROVED FOR PUBLICATION

Harold J. Peterfeso — STATE DESIGN ENGINEER

06-08-06 — DATE

Washington State Department of Transportation

EFFECTIVE: APRIL 2, 2007 TO JANUARY 6, 2008
EFFECTIVE: APRIL 2, 2007 TO JANUARY 6, 2008
EFFECTIVE: APRIL 2, 2007 TO JANUARY 6, 2008
EFFECTIVE: APRIL 2, 2007 TO JANUARY 6, 2008

EFFECTIVE: APRIL 2, 2007 TO JANUARY 6, 2008

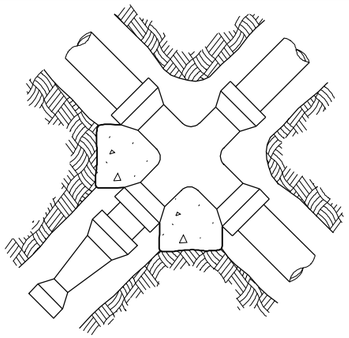

PLAN VIEW

UNBALANCED CROSS

(USE COLUMN **A**)

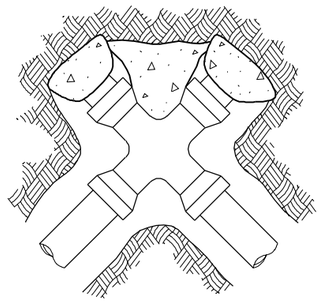

PLAN VIEW

PLUGGED CROSS

(USE COLUMN **B**)

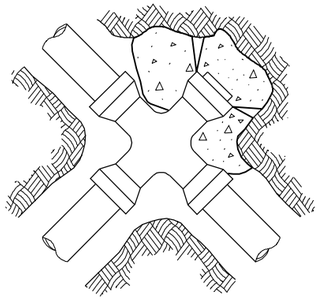

PLAN VIEW

PLUGGED CROSS

(USE COLUMN **A**)

NOTES

1. Contractor to provide blocking adequate to withstand full test pressure.
2. Divide thrust by safe bearing load to determine required area (in square feet) of concrete to distribute load.
3. Areas to be adjusted for other pressure conditions.
4. Provide two 1" minimum diameter rods on valves up through 10" diameter. Valves larger than 10" require special tie rod design.

SIZE	TEST PRESSURE (PSI)	THRUST AT FITTINGS IN POUNDS				
		A	B	C	D	E
		TEE AND DEAD ENDS	90° BEND	45° BEND	22.5° BEND	11.25° BEND
4"	250	3,140	4,440	2,405	1,225	615
6"	250	7,070	9,995	5,410	2,760	1,385
8"	250	12,565	17,770	9,620	4,905	2,465
10"	250	19,635	27,770	15,030	7,660	3,850
12"	250	28,275	39,985	21,640	11,030	5,545
14"	250	38,485	54,425	29,455	15,015	7,545
16"	250	50,265	71,085	38,470	19,615	9,855

SOIL TYPE	SAFE BEARING LOAD (PSF)
MUCK, PEAT, ETC.	0
SOFT CLAY	1,000
SAND	2,000
SAND AND GRAVEL	3,000
SAND AND GRAVEL CEMENTED WITH CLAY	4,000
HARD SHALE	10,000

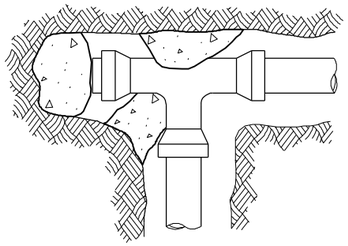

PLAN VIEW

PLUGGED TEE

(USE COLUMN **B**)

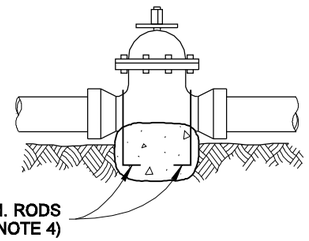

PROFILE VIEW

VALVE

(USE COLUMN **A**)

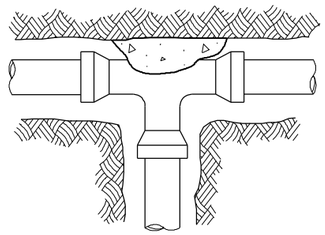

PLAN VIEW

TEE

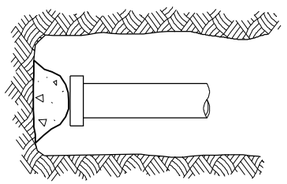

PLAN VIEW

DEAD END

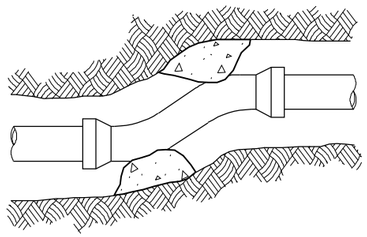

OFFSET

(USE COLUMNS **B ~ E**)

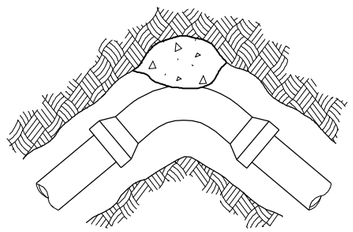

BEND



EXPIRES JULY 1, 2007

NOTE: THIS PLAN IS NOT A LEGAL ENGINEERING DOCUMENT BUT AN ELECTRONIC DUPLICATE. THE ORIGINAL, SIGNED BY THE ENGINEER AND APPROVED FOR PUBLICATION, IS KEPT ON FILE AT THE WASHINGTON STATE DEPARTMENT OF TRANSPORTATION. A COPY MAY BE OBTAINED UPON REQUEST.

CONCRETE THRUST BLOCK

STANDARD PLAN B-90.40-00

SHEET 1 OF 1 SHEET

APPROVED FOR PUBLICATION

Harold J. Peterfeso — STATE DESIGN ENGINEER

06-08-06 — DATE

Washington State Department of Transportation

EFFECTIVE: APRIL 2, 2007 TO JANUARY 6, 2008

EFFECTIVE: APRIL 2, 2007 TO JANUARY 6, 2008

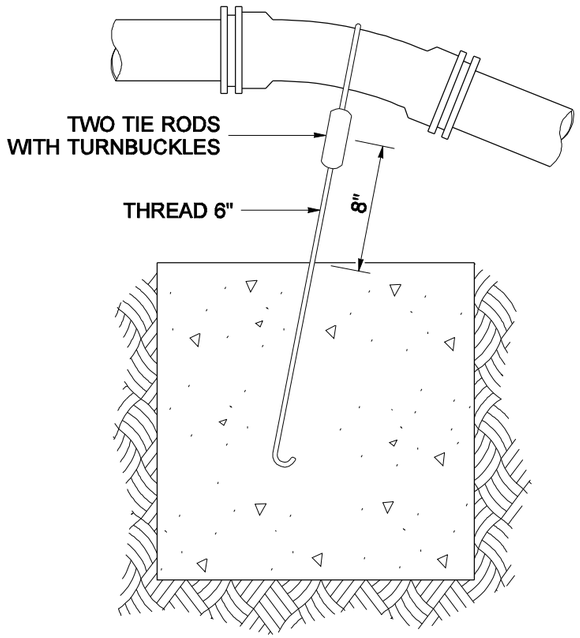

BLOCKING FOR 11.25° OR 22.5° VERTICAL BENDS

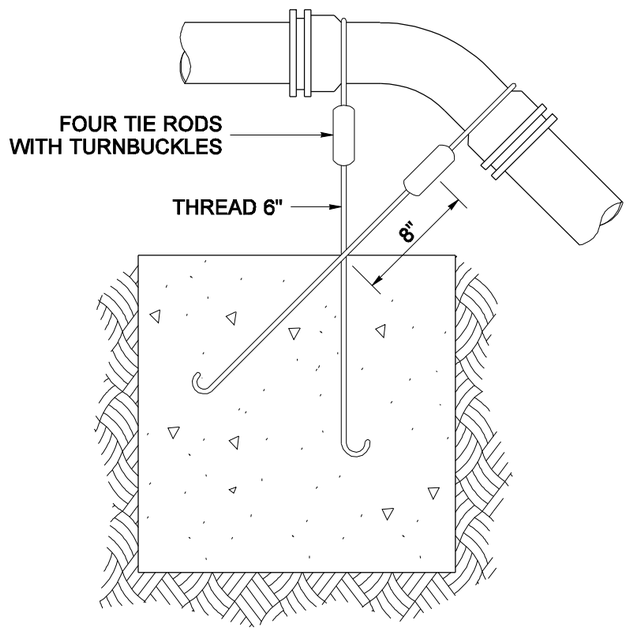

BLOCKING FOR 45° VERTICAL BENDS

EFFECTIVE: APRIL 2, 2007 TO JANUARY 6, 2008

NOTE

Steel tie rods to be heavily coated with asphalt after installation.

DIMENSION TABLE						
PIPE DIAM.	TEST PRESSURE (PSI)	BEND ANGLE	CONCRETE VOLUME (Ft^3)	CUBE SIZE (Ft)	TIE ROD DIAM.	TIE ROD EMBEDMENT
4"	250	11.25°	6	1.8	5/8"	17"
		22.5°	12	2.3		
		45°	22	2.8		
6"	250	11.25°	14	2.4	5/8"	17"
		22.5°	27	3.0		
		45°	50	3.7		
8"	250	11.25°	25	2.9	5/8"	17"
		22.5°	48	3.6		
		45°	89	4.5		
10"	250	11.25°	38	3.4	5/8"	17"
		22.5°	75	4.2		
		45°	139	5.2		
12"	250	11.25°	55	3.8	5/8"	17"
		22.5°	108	4.8		
		45°	200	5.8	7/8"	24"
14"	250	11.25°	75	4.2	5/8"	17"
		22.5°	147	5.3	3/4"	20"
		45°	272	6.5	1"	27"
16"	250	11.25°	98	4.6	5/8"	17"
		22.5°	192	5.8	7/8"	24"
		45°	355	7.1	1 1/8"	30"



EXPIRES JULY 1, 2007

NOTE: THIS PLAN IS NOT A LEGAL ENGINEERING DOCUMENT BUT AN ELECTRONIC DUPLICATE. THE ORIGINAL, SIGNED BY THE ENGINEER AND APPROVED FOR PUBLICATION, IS KEPT ON FILE AT THE WASHINGTON STATE DEPARTMENT OF TRANSPORTATION. A COPY MAY BE OBTAINED UPON REQUEST.

CONCRETE THRUST BLOCK FOR CONVEX VERTICAL BENDS STANDARD PLAN B-90.50-00

SHEET 1 OF 1 SHEET

APPROVED FOR PUBLICATION

Harold J. Peterfeso — STATE DESIGN ENGINEER — *06-08-06* — DATE

Washington State Department of Transportation

EFFECTIVE: APRIL 2, 2007 TO JANUARY 6, 2008

EFFECTIVE: APRIL 2, 2007 TO JANUARY 6, 2008

DRAWN BY: MONIQUE GLICK

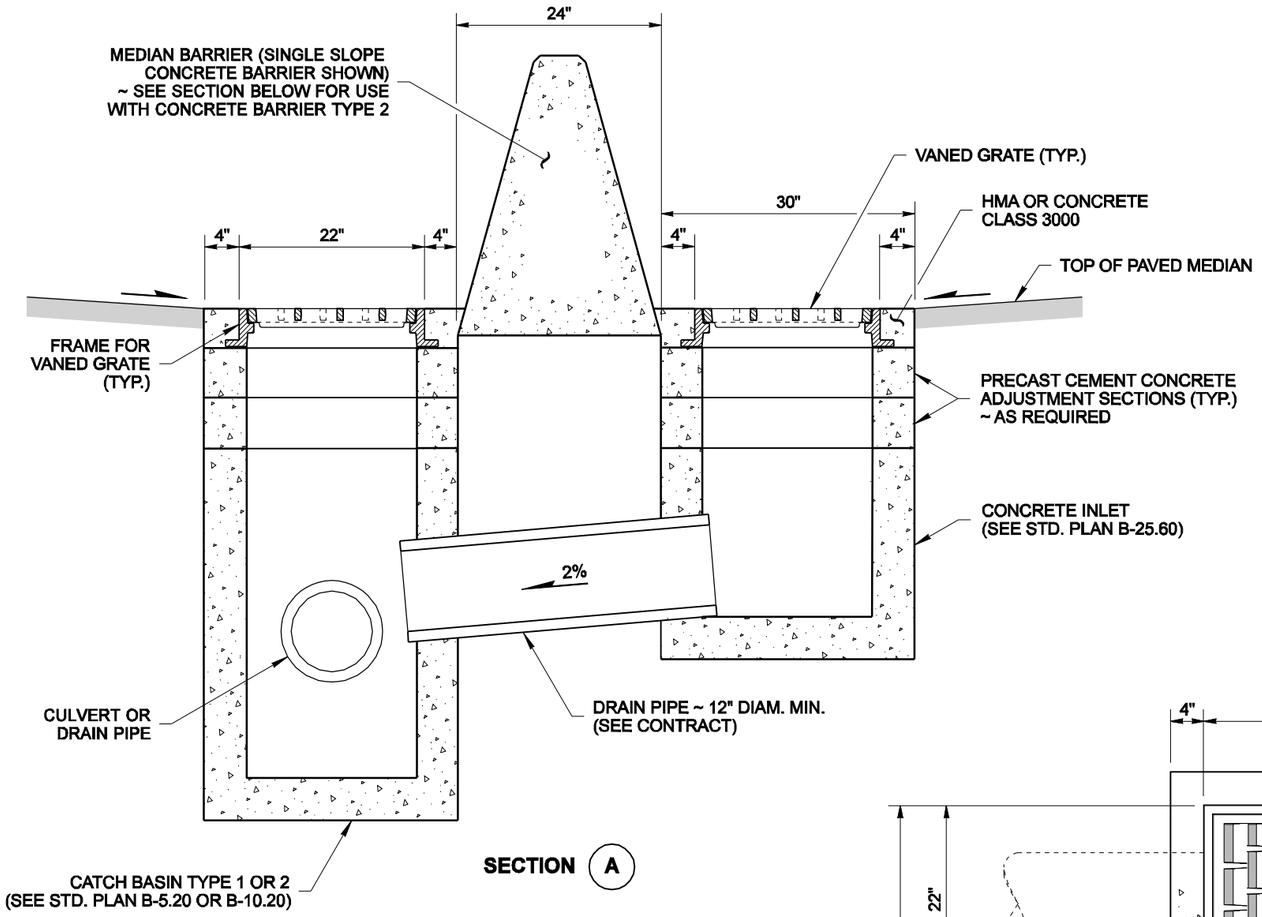

SECTION (A)

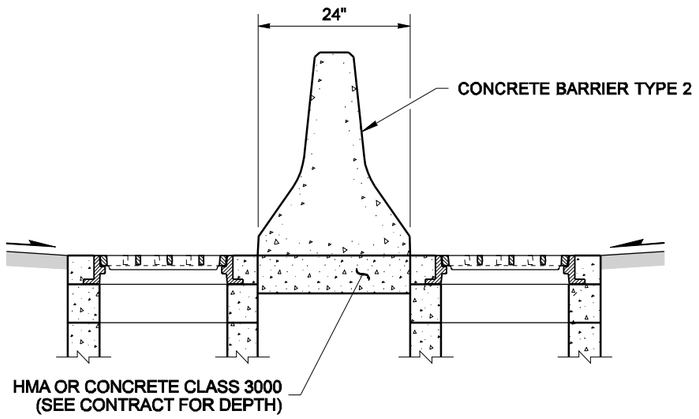

CONCRETE BARRIER TYPE 2 SECTION

SEE **SECTION** (A)

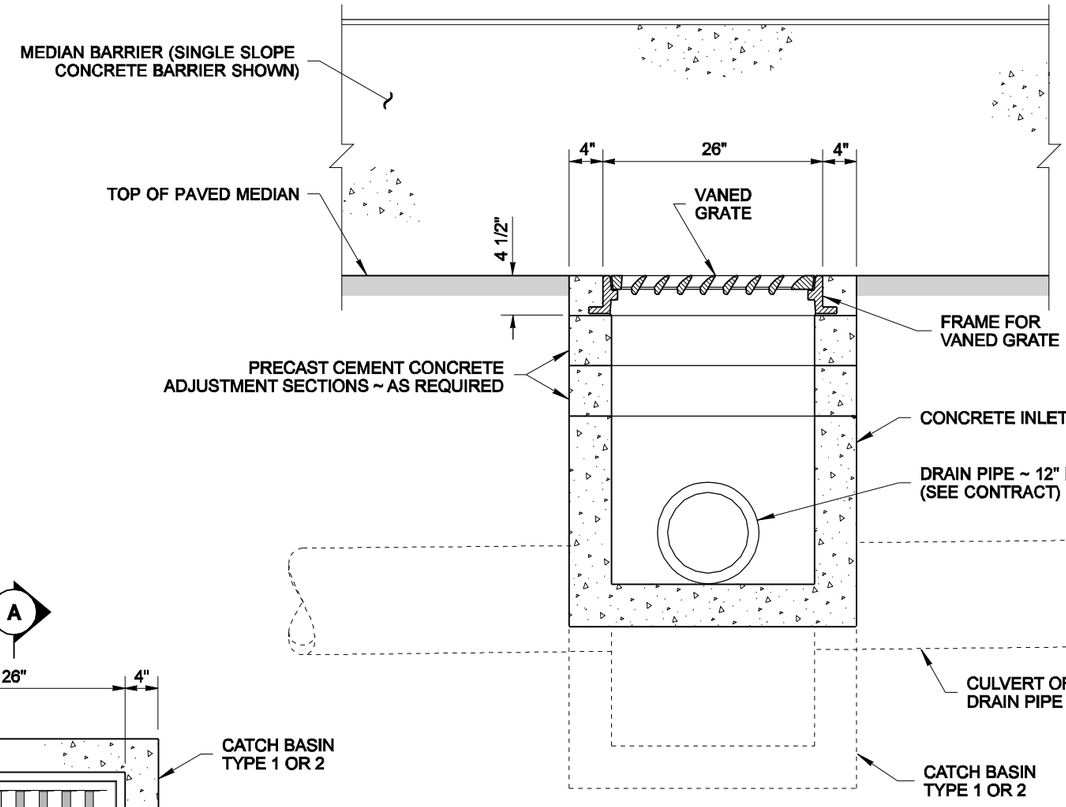

SECTION (B)

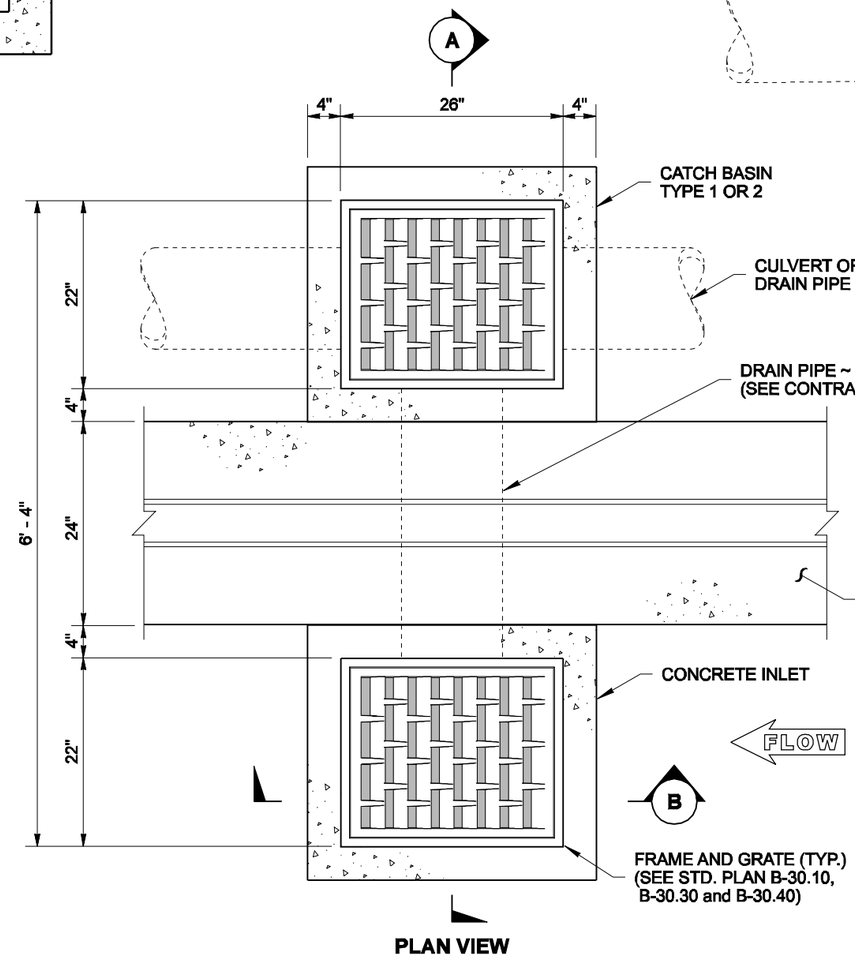

PLAN VIEW

MATTHEW J. WITECKI
STATE OF WASHINGTON
15588
REGISTERED
PROFESSIONAL ENGINEER

EXPIRES JULY 1, 2007

NOTE: THIS PLAN IS NOT A LEGAL ENGINEERING DOCUMENT BUT AN ELECTRONIC DUPLICATE. THE ORIGINAL, SIGNED BY THE ENGINEER AND APPROVED FOR PUBLICATION, IS KEPT ON FILE AT THE WASHINGTON STATE DEPARTMENT OF TRANSPORTATION. A COPY MAY BE OBTAINED UPON REQUEST.

MEDIAN BARRIER DRAINAGE INSTALLATION

STANDARD PLAN B-95.20-00

SHEET 1 OF 1 SHEET

APPROVED FOR PUBLICATION

Harold J. Peterfeso — STATE DESIGN ENGINEER — *06-08-06* — DATE

Washington State Department of Transportation

EFFECTIVE: APRIL 2, 2007 TO JANUARY 6, 2008

EFFECTIVE: APRIL 2, 2007 TO JANUARY 6, 2008

DRAWN BY: ADAM COCHRAN

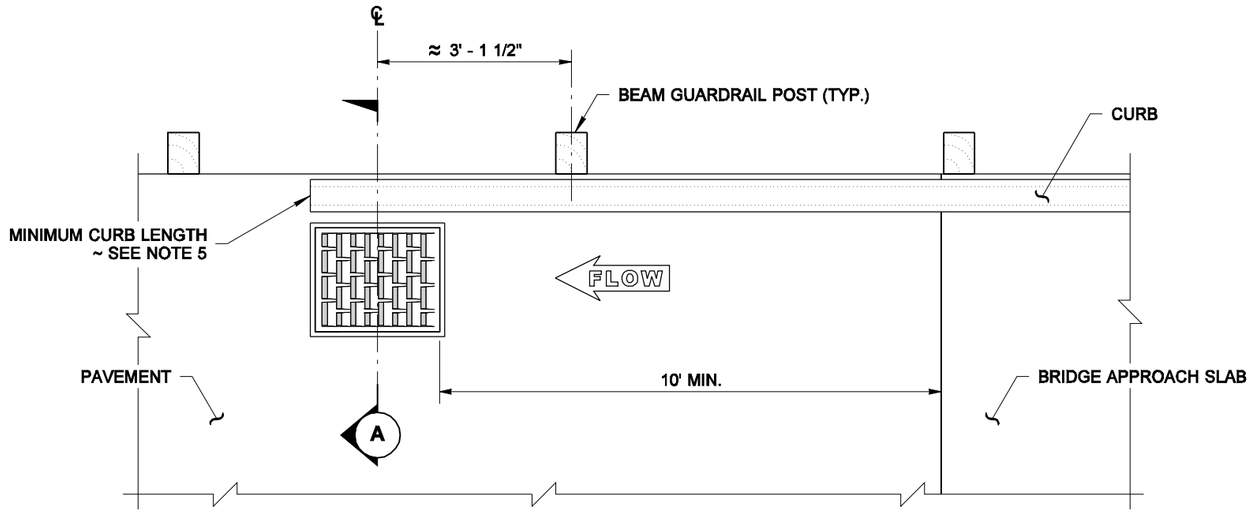

BEAM GUARDRAIL BLOCKS AND RAIL ELEMENTS NOT SHOWN FOR CLARITY

PLAN

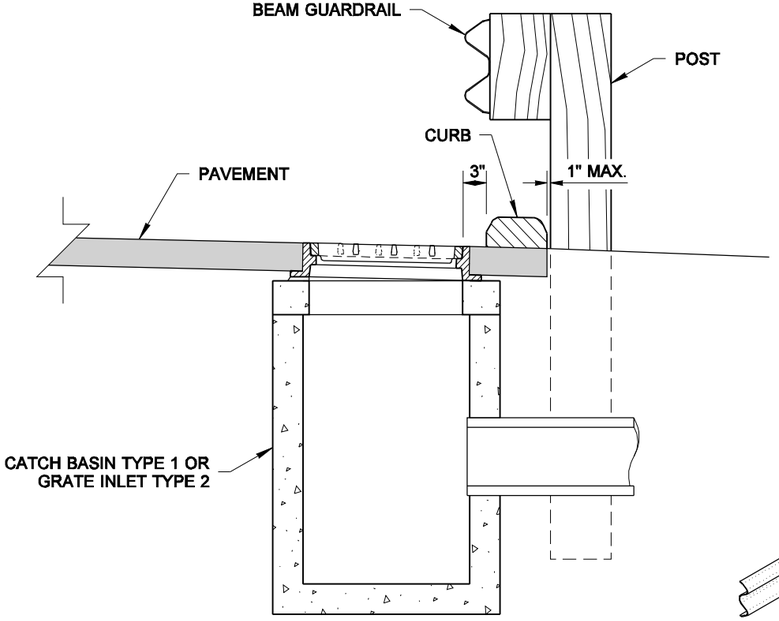

SECTION (A)

NOTES

1. The beam guardrail type, post type, beam guardrail transition section type, connection type, and bridge traffic barrier shape may vary from that shown on this plan.
2. The Catch Basin or Grate Inlet shall be centered between the Beam Guardrail Posts.
3. With Beam Guardrail Transition Section Types 2, 4, and 5, use Extruded Curb Types 1, 2, 4, 4a, 5, or 5a.
4. With Beam Guardrail Transition Section Types 1, 1A, 1B, 10, 11, and 12, use Extruded Curb Type 2 (Extruded Asphalt Concrete Curb).
5. See Contract Plans for length of Curb.

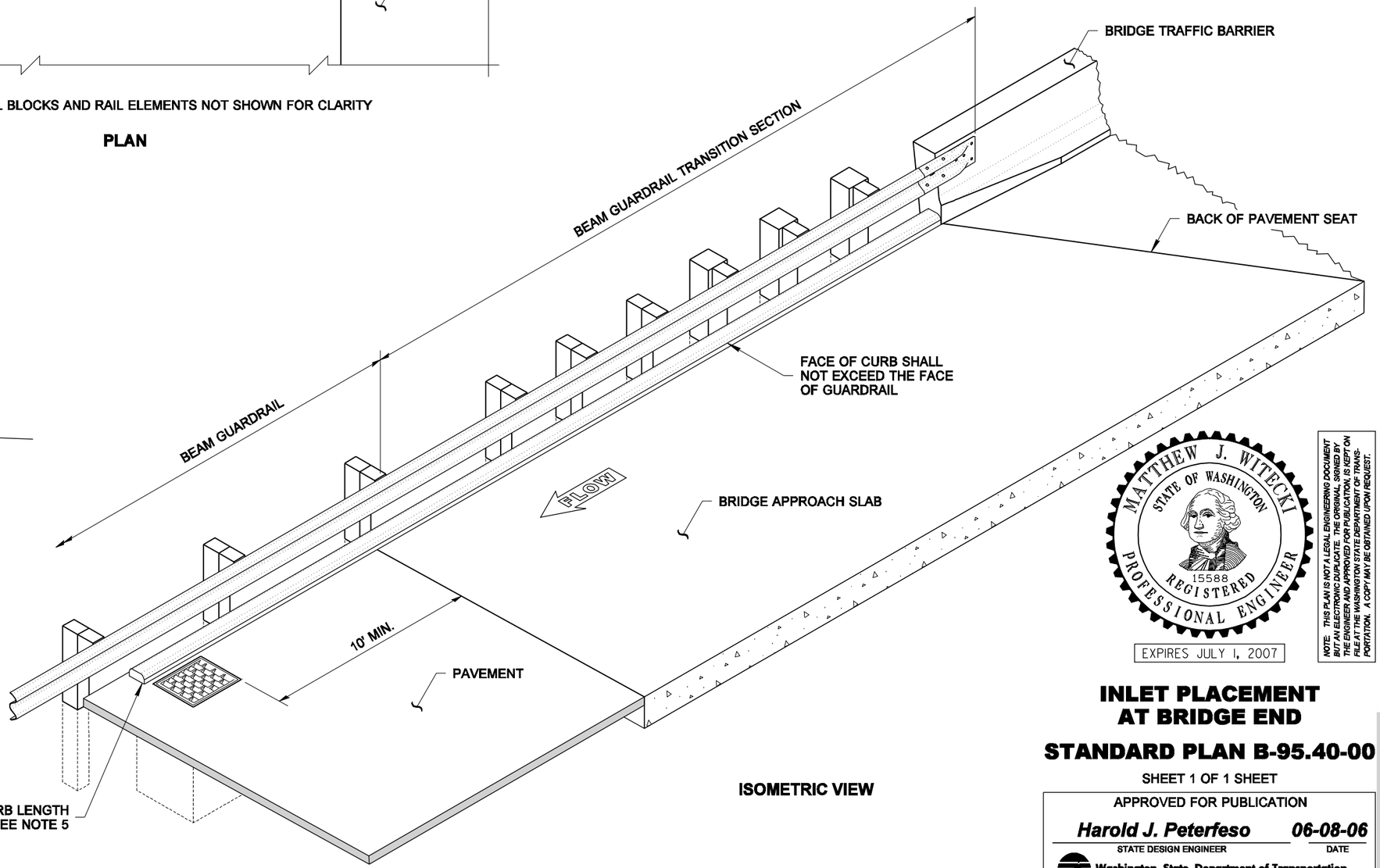

ISOMETRIC VIEW

MATTHEW J. WITECKI
STATE OF WASHINGTON
15588
REGISTERED
PROFESSIONAL ENGINEER

EXPIRES JULY 1, 2007

NOTE: THIS PLAN IS NOT A LEGAL ENGINEERING DOCUMENT BUT AN ELECTRONIC DUPLICATE. THE ORIGINAL, SIGNED BY THE ENGINEER AND APPROVED FOR PUBLICATION, IS KEPT ON FILE AT THE WASHINGTON STATE DEPARTMENT OF TRANSPORTATION. A COPY MAY BE OBTAINED UPON REQUEST.

INLET PLACEMENT AT BRIDGE END

STANDARD PLAN B-95.40-00

SHEET 1 OF 1 SHEET

APPROVED FOR PUBLICATION

Harold J. Peterfeso — STATE DESIGN ENGINEER — *06-08-06* — DATE

Washington State Department of Transportation

EFFECTIVE: APRIL 2, 2007 TO JANUARY 6, 2008

EFFECTIVE: APRIL 2, 2007 TO JANUARY 6, 2008

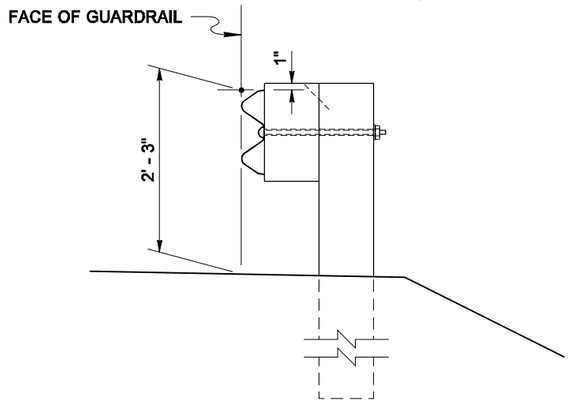

TYPE 1

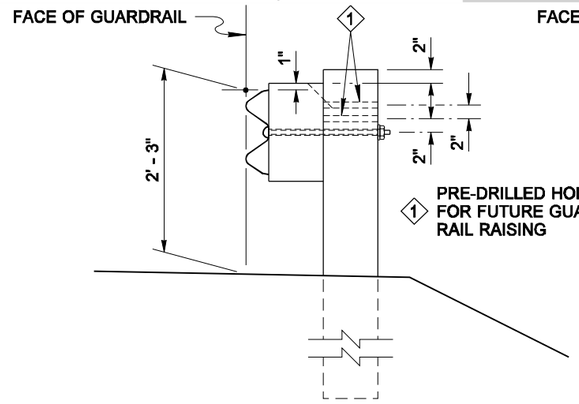

RAIL ELEMENT RAISED

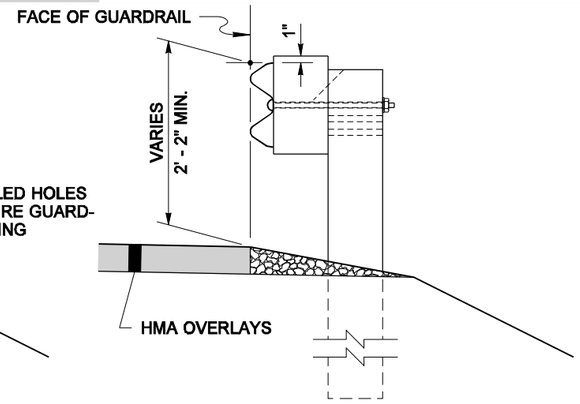

RAIL ELEMENT RAISED

TYPE 1 ALTERNATIVE

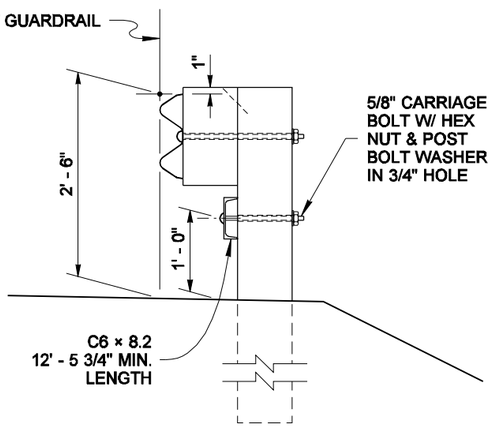

TYPE 2

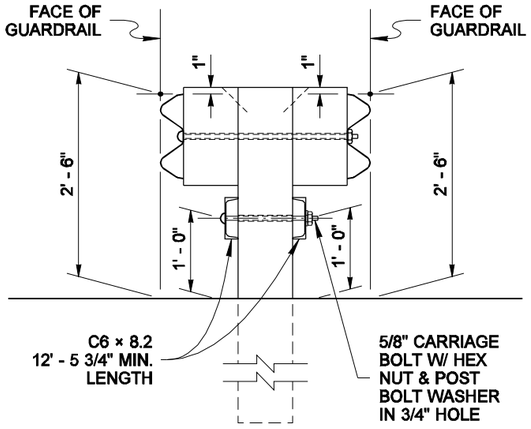

TYPE 3

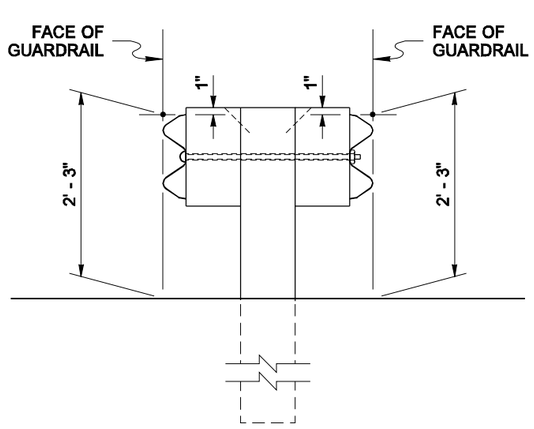

TYPE 4

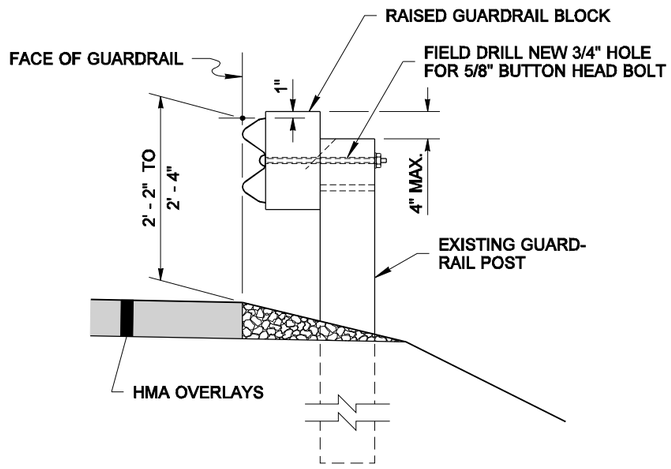

BEAM GUARDRAIL RAISING FOR HMA OVERLAYS

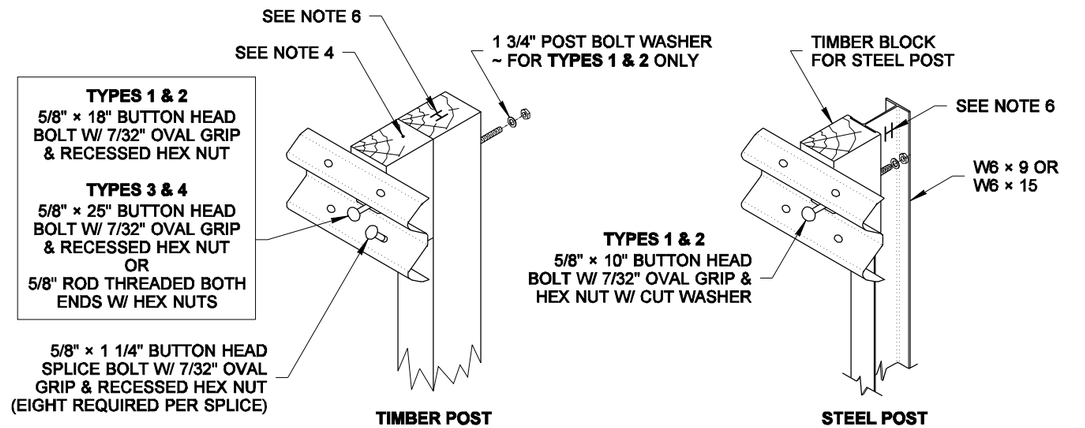

TIMBER POST

STEEL POST
ALL MOUNTING AND SPLICE HARDWARE SAME AS FOR TIMBER POST EXCEPT AS NOTED

ASSEMBLY DETAIL

NOTES

1. When required by the Contract, a Snow Load Post Washer shall be used on the backside of the post (in lieu of the 1 3/4" Post Bolt Washer) and a Snow Load Rail Washer shall be placed on the face side of Beam Guardrail Types 1 and 2. Snow Load Rail Washers shall not be installed on terminals.
2. Rail Washers, also called "Snow Load Rail Washers" are not required on new installation except as called for in Note 1. Unnecessary Rail washers need not be removed from existing installations, except those on posts 2 through 8 of a BCT installation shall be removed.
3. Beam Guardrail post spacing for Types 1 through 4 shall be 6' - 3" on centers.
4. Timber blocks shall be toe-nailed to the post with a 16d galvanized nail to prevent block rotation.
5. For post and block details, see Standard Plan C-1b.
6. When "Beam Guardrail Type 1 - ___ Ft. Long Post" is specified in the Contract, the post length shall be stamped with numbers, 1 1/2" min. high and 1/4" deep, at the location where the letter "H" is shown in the ASSEMBLY DETAIL. After installing a Long Post, it shall be the Contractor's responsibility to ensure that the stamped numbers are still legible and 1/4" deep.
7. Existing posts shall not be raised. Replace posts as necessary to achieve required guardrail height.

DATE	REVISION	BY
02/2007	ADDED "BEAM GUARDRAIL RAISING FOR HMA OVERLAYS", REVISED WIDTH OF SNOW LOAD RAIL WASHER, SLOT DIMENSION ON EXPANSION SECTION	LKC

RICHARD BARSTOW ALBIN
STATE OF WASHINGTON
34042
REGISTERED
PROFESSIONAL ENGINEER

EXPIRES JULY 24, 2008

NOTE: THIS PLAN IS NOT A LEGAL ENGINEERING DOCUMENT BUT AN ELECTRONIC DUPLICATE. THE ORIGINAL, SIGNED BY THE ENGINEER AND APPROVED FOR PUBLICATION, IS KEPT ON FILE AT THE WASHINGTON STATE DEPARTMENT OF TRANSPORTATION. A COPY MAY BE OBTAINED UPON REQUEST.

BEAM GUARDRAIL TYPES 1 ~ 4 (W-BEAM) STANDARD PLAN C-1

SHEET 1 OF 2 SHEETS

APPROVED FOR PUBLICATION

Ken L. Smith — STATE DESIGN ENGINEER

02-06-07 — DATE

Washington State Department of Transportation

EFFECTIVE: APRIL 2, 2007 TO JANUARY 6, 2008

EFFECTIVE: APRIL 2, 2007 TO JANUARY 6, 2008

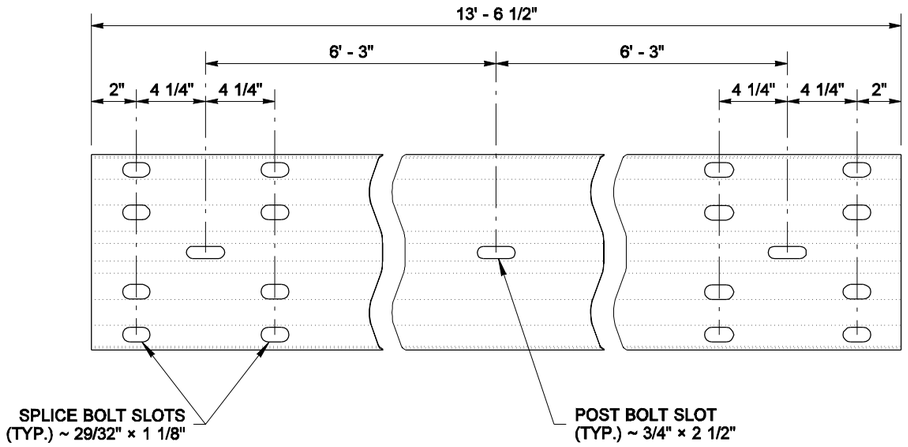

TYPICAL RAIL ELEMENT

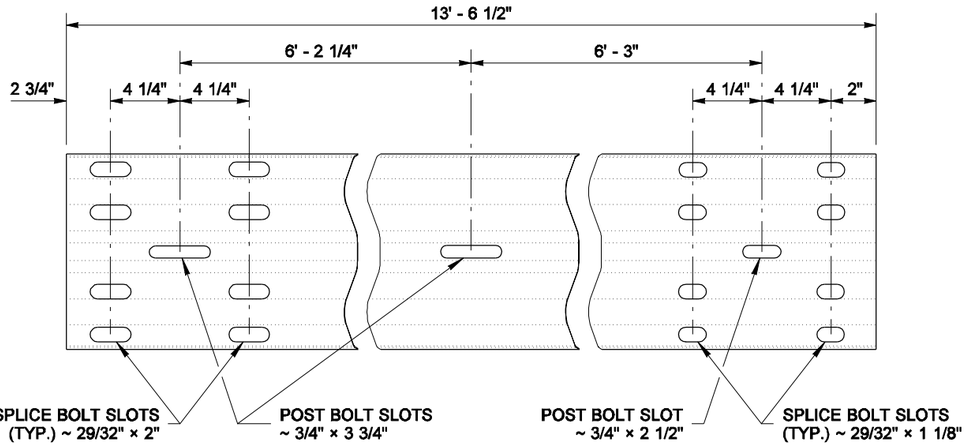

EXPANSION SECTION

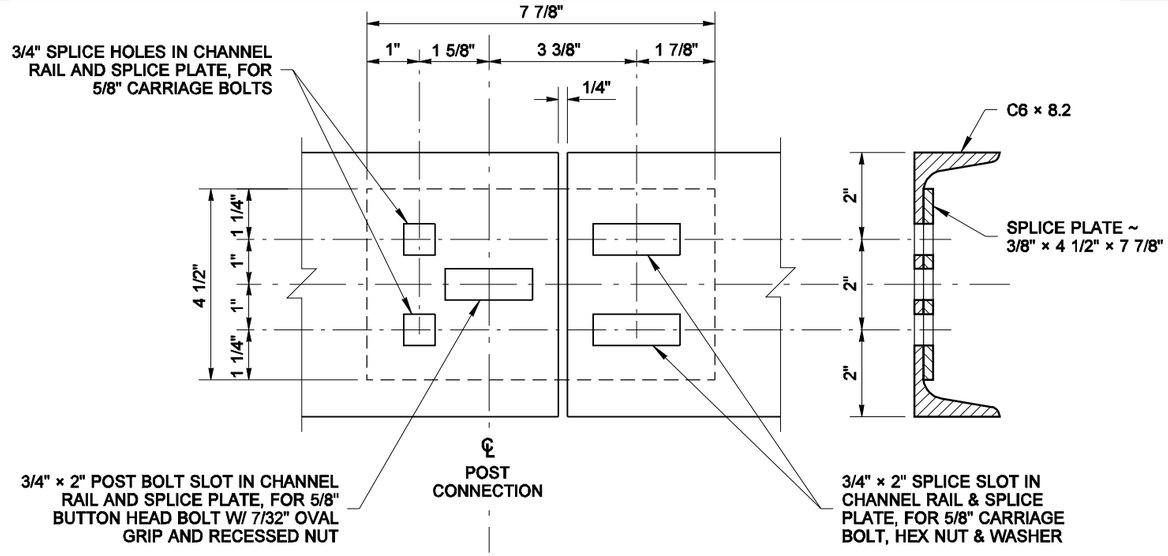

CHANNEL RAIL SPLICE

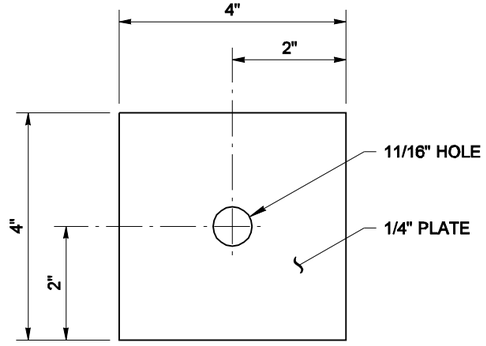

SNOW LOAD
POST WASHER
SEE NOTE 1

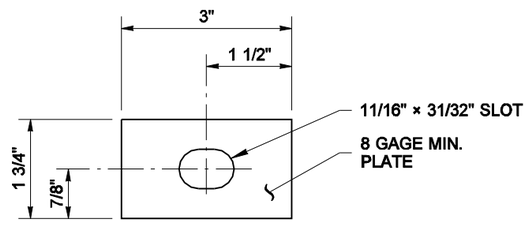

SNOW LOAD
RAIL WASHER
SEE NOTES 1 & 2

RICHARD BARSTOW ALBIN
STATE OF WASHINGTON
34042
REGISTERED
PROFESSIONAL ENGINEER

EXPIRES JULY 24, 2008

NOTE: THIS PLAN IS NOT A LEGAL ENGINEERING DOCUMENT BUT AN ELECTRONIC DUPLICATE. THE ORIGINAL, SIGNED BY THE ENGINEER AND APPROVED FOR PUBLICATION, IS KEPT ON FILE AT THE WASHINGTON STATE DEPARTMENT OF TRANSPORTATION. A COPY MAY BE OBTAINED UPON REQUEST.

BEAM GUARDRAIL TYPES 1 ~ 4 (W-BEAM) STANDARD PLAN C-1

SHEET 2 OF 2 SHEETS

APPROVED FOR PUBLICATION

Ken L. Smith — STATE DESIGN ENGINEER

02-06-07 — DATE

Washington State Department of Transportation

EFFECTIVE: APRIL 2, 2007 TO JANUARY 6, 2008

EFFECTIVE: APRIL 2, 2007 TO JANUARY 6, 2008

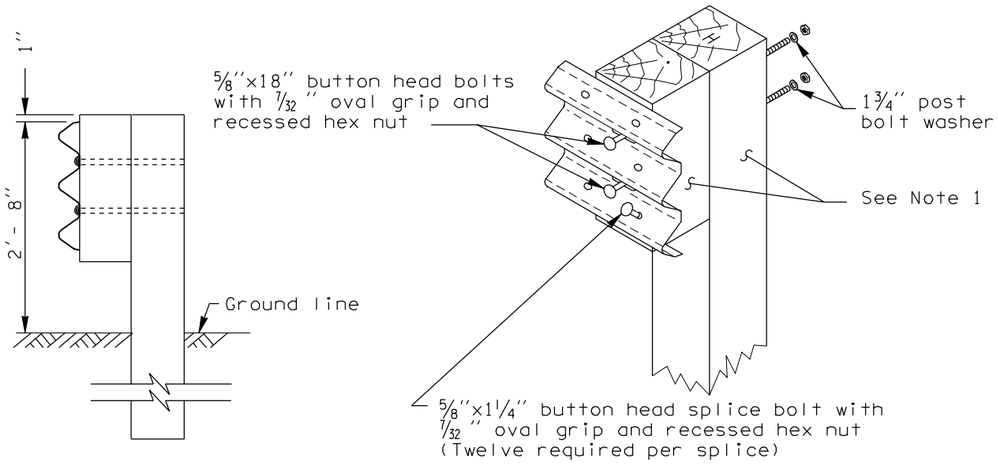

RAIL ASSEMBLY

WOOD POST ASSEMBLY

TYPE 10

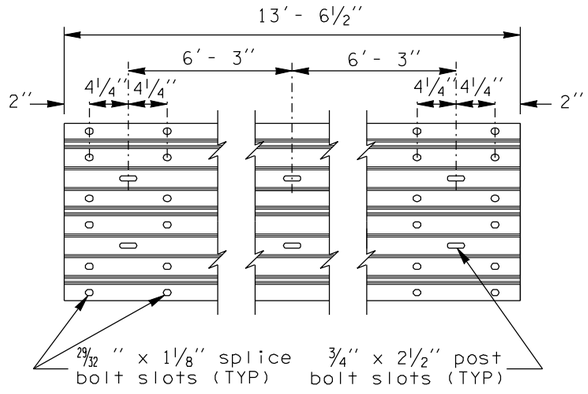

THRIE BEAM RAIL ELEMENT

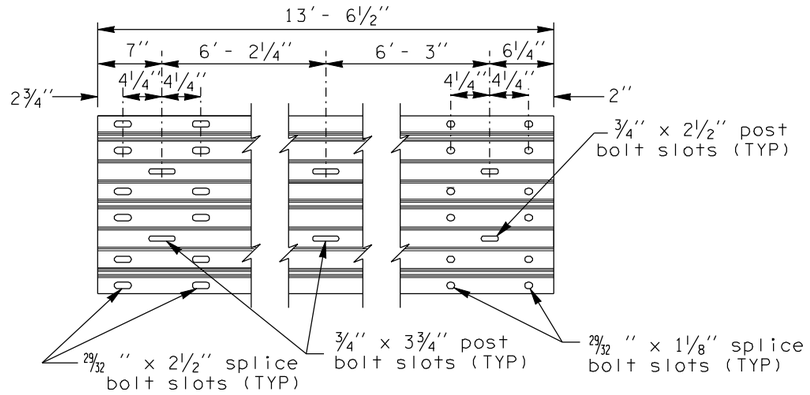

THRIE BEAM EXPANSION SECTION

NOTES
1. Type 10 posts shall be 6x8 timber or W6x9.
   Type 11 posts shall be 10x10 timber or W6x15.
   For details, see "Standard Plan "Beam Guardrail Posts and Blocks."
2. Type 10 guardrail post spacing shall be 6'- 3" on center.
   Type 11 shall be a maximum of 3'- 1½" on center.

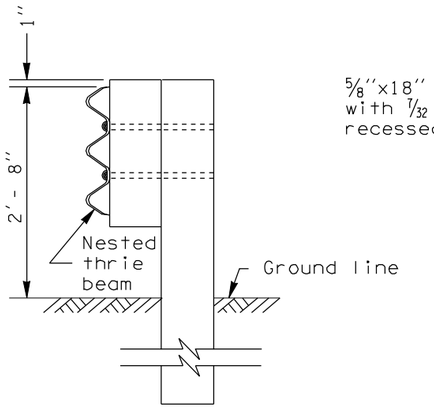

RAIL ASSEMBLY

WOOD POST ASSEMBLY

TYPE 11

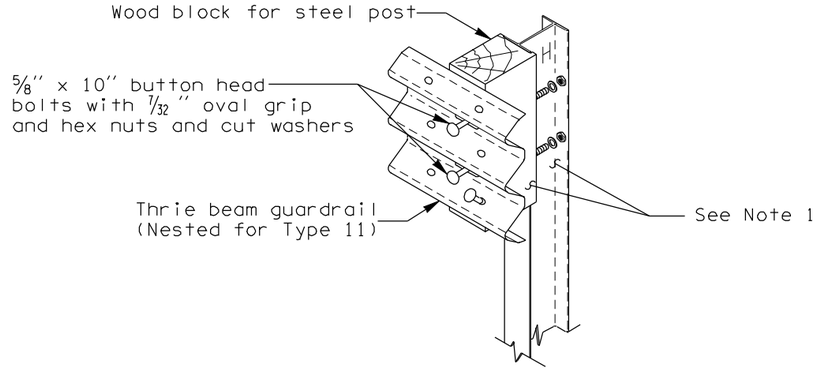

STEEL POST ASSEMBLY

TYPE 10 and 11

CLIFFORD E. MANSFIELD
STATE OF WASHINGTON
15224
REGISTERED
PROFESSIONAL ENGINEER

EXPIRES MAY 3, 2000

NOTE: THIS PLAN IS NOT A LEGAL ENGINEERING DOCUMENT BUT AN ELECTRONIC DUPLICATE. THE ORIGINAL, SIGNED BY THE ENGINEER AND APPROVED FOR PUBLICATION, IS KEPT ON FILE AT THE WASHINGTON STATE DEPARTMENT OF TRANSPORTATION. A COPY MAY BE OBTAINED UPON REQUEST.

BEAM GUARDRAIL (THRIE BEAM)

STANDARD PLAN C-1a

APPROVED FOR PUBLICATION

Clifford E. Mansfield — *7/31/98*

DEPUTY STATE DESIGN ENGINEER — DATE

WASHINGTON STATE DEPARTMENT OF TRANSPORTATION
OLYMPIA, WASHINGTON

DATE	REVISION	BY
1/99	Added missing dimension on Type 11 wood post assembly	RBA

EFFECTIVE: APRIL 2, 2007 TO JANUARY 6, 2008

EFFECTIVE: APRIL 2, 2007 TO JANUARY 6, 2008

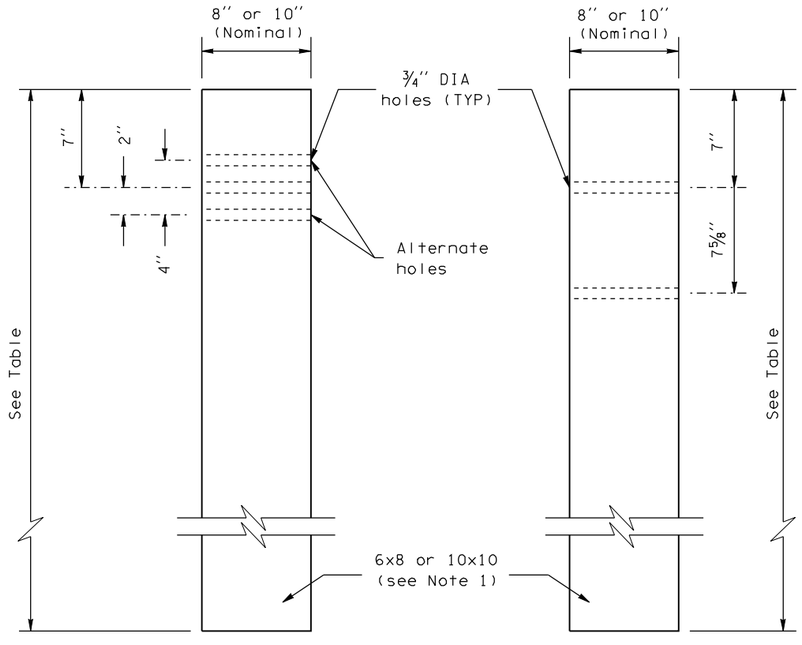

W-BEAM THRIE BEAM

WOOD POST

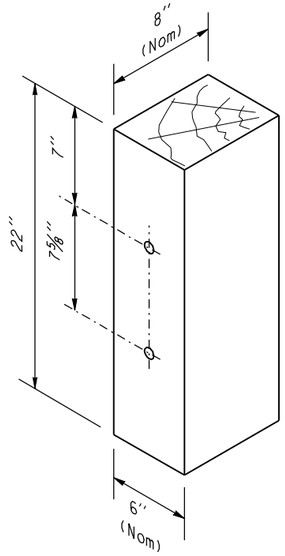

THRIE BEAM WOOD BLOCK
FOR WOOD POST

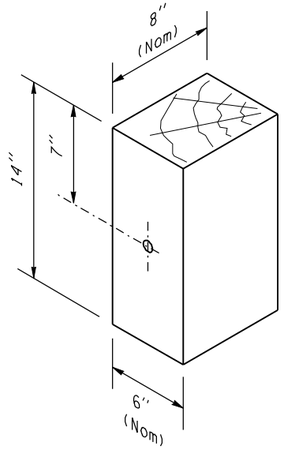

W BEAM WOOD BLOCK
FOR WOOD POSTS

POST LENGTH TABLE	
GUARDRAIL TYPE	LENGTH
1 through 4	6'-0''
10 or 11	6'-6''

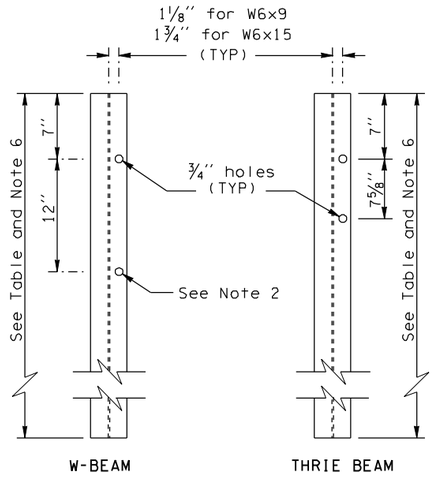

STEEL POST
See Notes 3 and 4

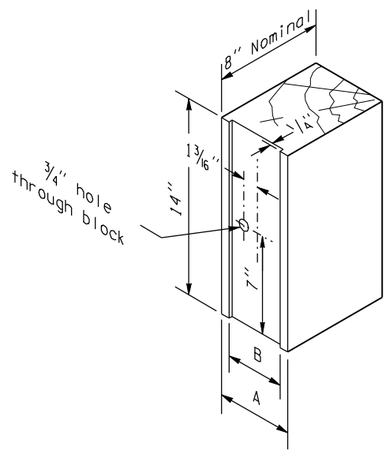

W BEAM WOOD BLOCK
FOR STEEL POST

POST	A	B
W6X9	6'' *	4 1/4''
W6X15	8'' *	6 1/4''

*Nominal

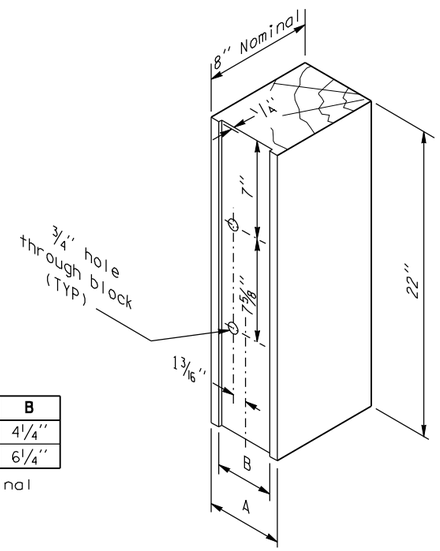

THRIE BEAM WOOD BLOCK
FOR STEEL POST

RICHARD BARSTOW ALBIN
STATE OF WASHINGTON
34042
REGISTERED
PROFESSIONAL ENGINEER

EXPIRES JULY 24, 2004

NOTE: THIS PLAN IS NOT A LEGAL ENGINEERING DOCUMENT BUT AN ELECTRONIC DUPLICATE. THE ORIGINAL, SIGNED BY THE ENGINEER AND APPROVED FOR PUBLICATION, IS KEPT ON FILE AT THE WASHINGTON STATE DEPARTMENT OF TRANSPORTATION. A COPY MAY BE OBTAINED UPON REQUEST.

BEAM GUARDRAIL POSTS AND BLOCKS

STANDARD PLAN C-1b

SHEET 1 OF 2 SHEETS

APPROVED FOR PUBLICATION

Harold J. Peterfeso — STATE DESIGN ENGINEER — *10-31-03* DATE

Washington State Department of Transportation

DATE	REVISION	BY
09/2003	REV. POST LENGTH TABLE	RG

EFFECTIVE: APRIL 2, 2007 TO JANUARY 6, 2008

EFFECTIVE: APRIL 2, 2007 TO JANUARY 6, 2008

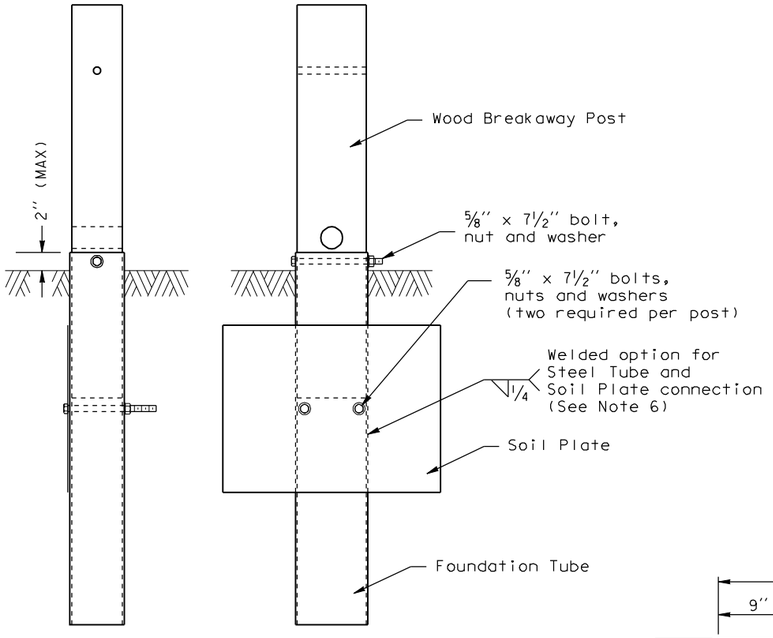

ANCHOR POST ASSEMBLY

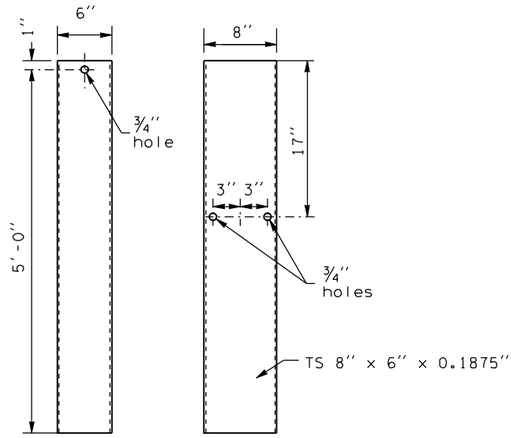

FOUNDATION TUBE

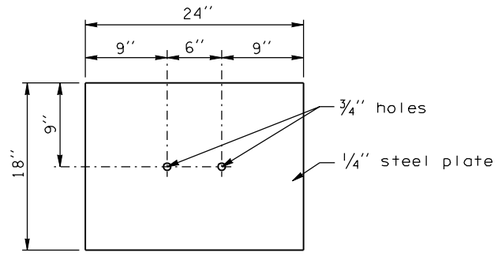

SOIL PLATE

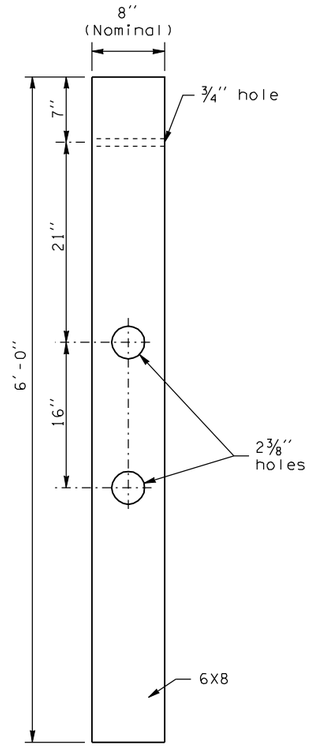

CONTROLLED RELEASING TERMINAL (CRT) POST

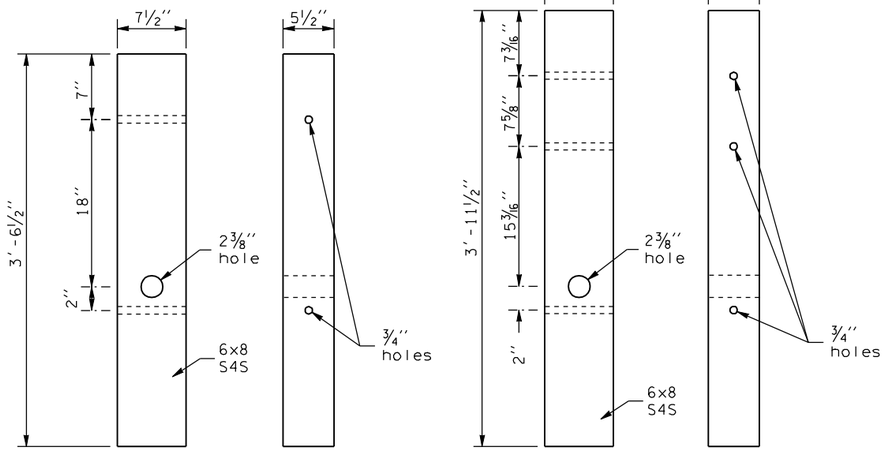

W-BEAM THRIE BEAM

WOOD BREAKAWAY POST

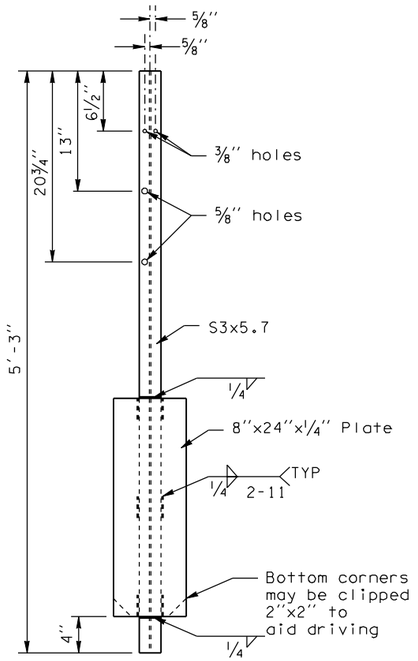

G-2 POST

NOTES

1. Wood posts for all guardrail placement plans shall be 6x8 except where noted otherwise.
2. Lower hole is for rub rail of Type 2 and Type 3 Beam Guardrail.
3. W6x9 steel posts and timber blocks are alternates for 6x8 timber posts and blocks. W6x15 steel posts and timber blocks are alternates for 10x10 timber posts and blocks.
4. Holes shall be located on approaching traffic side of web.
5. When contract requires "Beam Guardrail Type 1, __ Foot Long Post," the steel post length shall be marked with numbers to ensure permanent identification at the location where the letter "H" is shown on the detail. The marking shall be 1 1/2" MIN height.
6. Soil plate may be welded to foundation tube. If so, holes in soil plate and foundation tube may be omitted.



EXPIRES JULY 24, 2004

NOTE: THIS PLAN IS NOT A LEGAL ENGINEERING DOCUMENT BUT AN ELECTRONIC DUPLICATE. THE ORIGINAL, SIGNED BY THE ENGINEER AND APPROVED FOR PUBLICATION, IS KEPT ON FILE AT THE WASHINGTON STATE DEPARTMENT OF TRANSPORTATION. A COPY MAY BE OBTAINED UPON REQUEST.

BEAM GUARDRAIL POSTS AND BLOCKS

STANDARD PLAN C-1b

SHEET 2 OF 2 SHEETS

APPROVED FOR PUBLICATION

Harold J. Peterfeso — STATE DESIGN ENGINEER — *10-31-03* DATE

Washington State Department of Transportation

DATE	REVISION	BY
09/2003	REV. NOTES	RG

EFFECTIVE: APRIL 2, 2007 TO JANUARY 6, 2008

EFFECTIVE: APRIL 2, 2007 TO JANUARY 6, 2008
EFFECTIVE: APRIL 2, 2007 TO JANUARY 6, 2008

NOTES

1. For post details see Standard Plan, "Beam Guardrail Posts and Blocks".

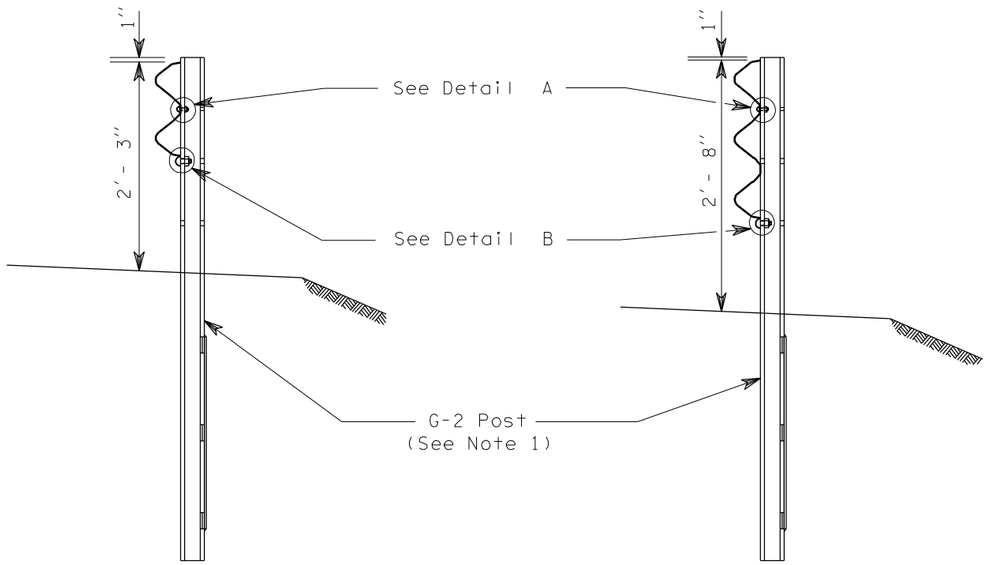

TYPE 20

TYPE 21

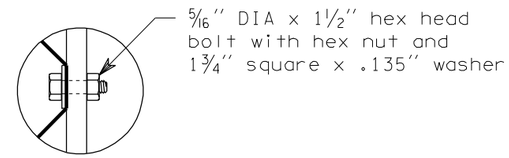

DETAIL A

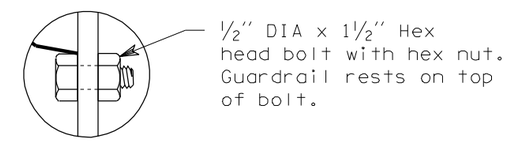

DETAIL B

BEAM GUARDRAIL



NOTE: THIS PLAN IS NOT A LEGAL ENGINEERING DOCUMENT BUT AN ELECTRONIC DUPLICATE. THE ORIGINAL SIGNED BY THE ENGINEER AND APPROVED FOR PUBLICATION IS KEPT ON FILE AT THE WASHINGTON STATE DEPARTMENT OF TRANSPORTATION. A COPY MAY BE OBTAINED UPON REQUEST.

STANDARD PLAN C-1c

APPROVED FOR PUBLICATION

Donald K. Nelson — 5/30/97

STATE DESIGN ENGINEER — DATE

WASHINGTON STATE DEPARTMENT OF TRANSPORTATION
OLYMPIA, WASHINGTON

EFFECTIVE: APRIL 2, 2007 TO JANUARY 6, 2008
EFFECTIVE: APRIL 2, 2007 TO JANUARY 6, 2008
EFFECTIVE: APRIL 2, 2007 TO JANUARY 6, 2008
EFFECTIVE: APRIL 2, 2007 TO JANUARY 6, 2008

EFFECTIVE: APRIL 2, 2007 TO JANUARY 6, 2008

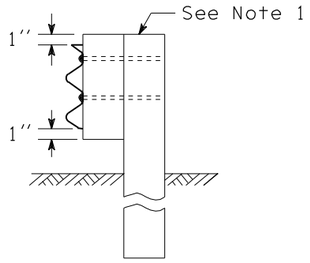

INTERMEDIATE GUARDRAIL
POST CONNECTION DETAILS

(Type A shown)

NOTES

1. For wood posts, saw top of post and block to 1'' above thrie beam guardrail reducer section. For steel posts, drive post down to 1'' maximum above the thrie beam guardrail reducer section.

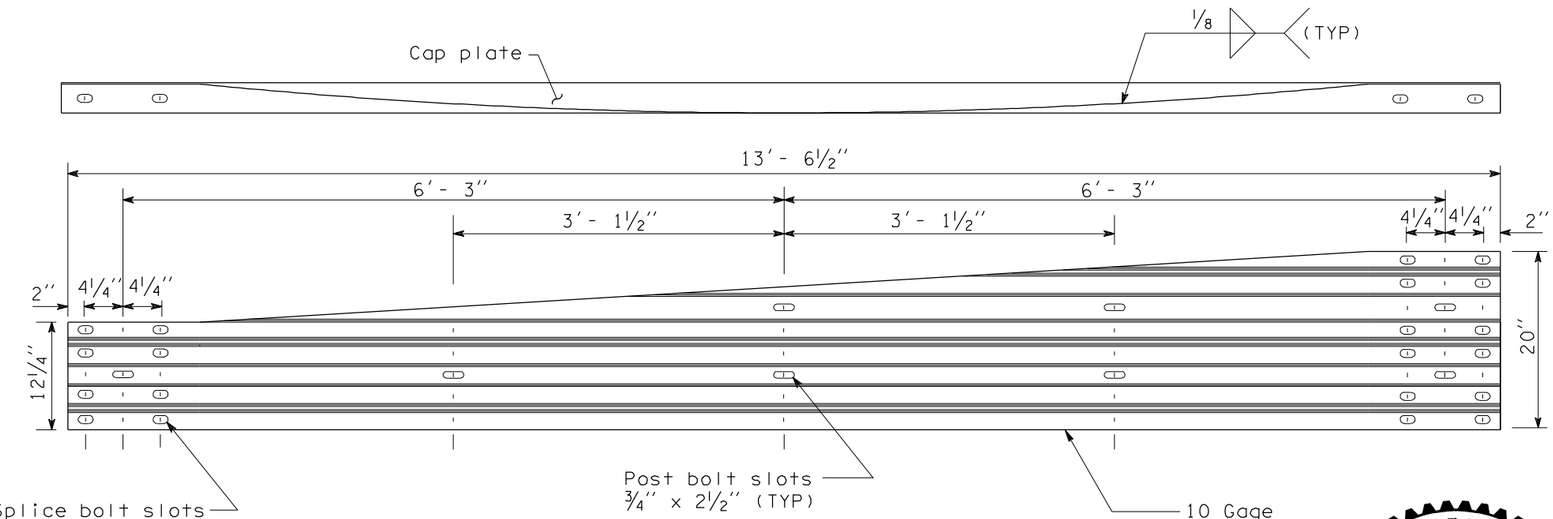

THRIE BEAM GUARDRAIL REDUCER SECTION
TYPE A

(Left section shown, right section reversed)

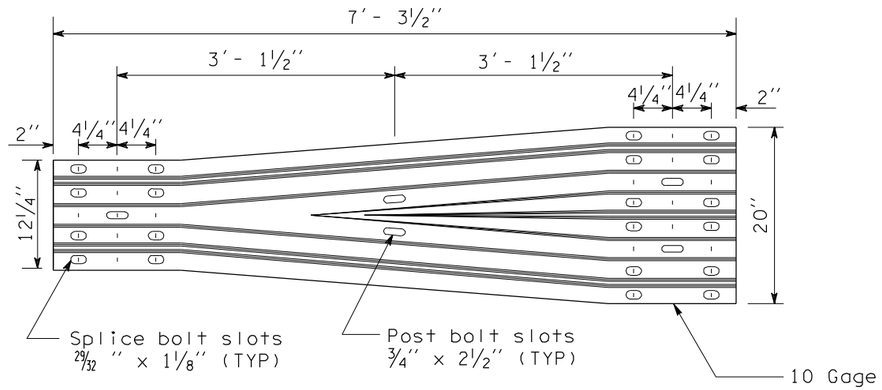

THRIE BEAM GUARDRAIL REDUCER SECTION
TYPE B

RICHARD BARSTOW ALBIN
STATE OF WASHINGTON
34042
REGISTERED
PROFESSIONAL ENGINEER

EXPIRES JULY 24, 2004

NOTE: THIS PLAN IS NOT A LEGAL ENGINEERING DOCUMENT BUT AN ELECTRONIC DUPLICATE. THE ORIGINAL, SIGNED BY THE ENGINEER AND APPROVED FOR PUBLICATION, IS KEPT ON FILE AT THE WASHINGTON STATE DEPARTMENT OF TRANSPORTATION. A COPY MAY BE OBTAINED UPON REQUEST.

THRIE BEAM GUARDRAIL REDUCER SECTION

STANDARD PLAN C-1d

SHEET 1 OF 1 SHEET

APPROVED FOR PUBLICATION

Harold J. Peterfeso — STATE DESIGN ENGINEER — *10-31-03* — DATE

Washington State Department of Transportation

DATE	REVISION	BY
09/2003	ADDED 10 GAGE STEEL DESIGNATION; REV. NOTE 1	RG

EFFECTIVE: APRIL 2, 2007 TO JANUARY 6, 2008

EFFECTIVE: APRIL 2, 2007 TO JANUARY 6, 2008

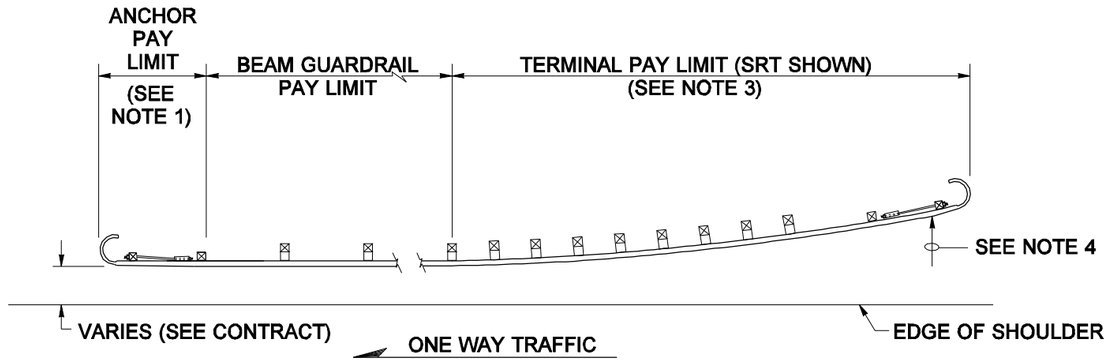

CASE 1

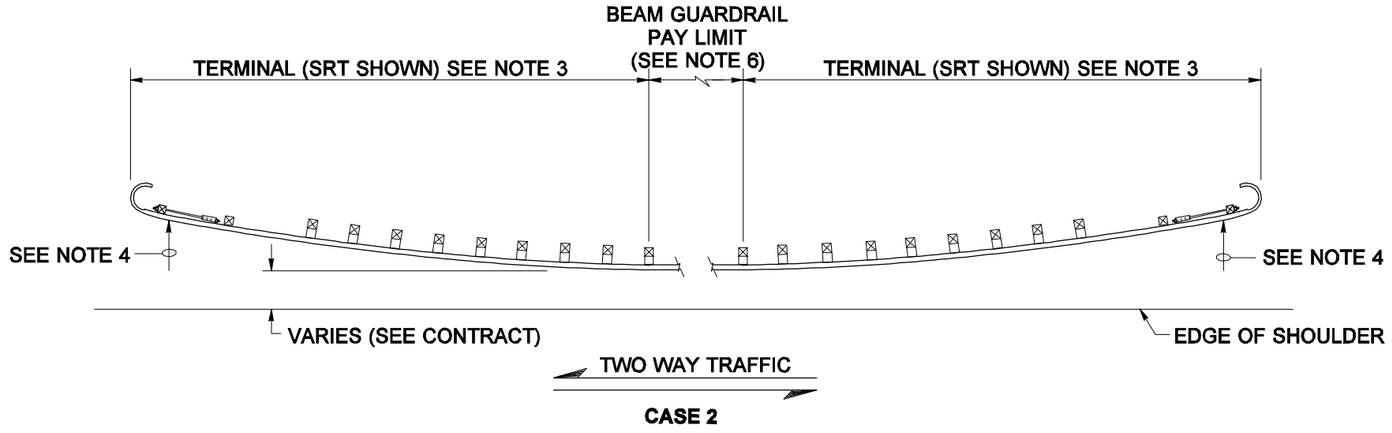

CASE 2

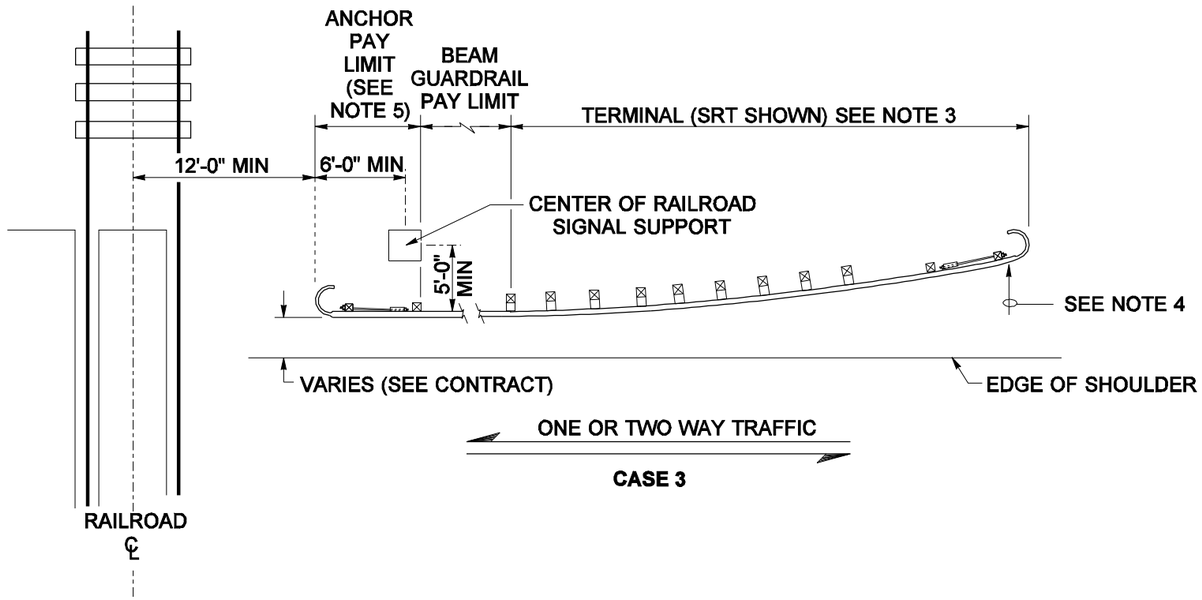

CASE 3

NOTES

1. Type 4 anchor required. For details, see Standard Plan C-6c.
2. Post spacing is 6'-3" unless otherwise shown.
3. For Terminal type and details, see Contract Plans and applicable Standard Plan(s).
4. The slope from the edge of the shoulder into the face of the guardrail should not exceed 10:1 when the face of the guardrail is less than 12'-0" from the edge of the shoulder.
5. For one-way traffic, use Type 4 anchor. For two-way traffic, use Type 1 anchor. See applicable Standard Plan(s) for details.
6. When Beam Guardrail Flared Terminals are used on both ends a minimum of 25'-0" of Beam Guardrail shall be installed.

CLIFFORD E. MANSFIELD
STATE OF WASHINGTON
15224
REGISTERED
PROFESSIONAL ENGINEER

EXPIRES MAY 3, 2000

NOTE: THIS PLAN IS NOT A LEGAL ENGINEERING DOCUMENT BUT AN ELECTRONIC DUPLICATE. THE ORIGINAL, SIGNED BY THE ENGINEER AND APPROVED FOR PUBLICATION, IS KEPT ON FILE AT THE WASHINGTON STATE DEPARTMENT OF TRANSPORTATION. A COPY MAY BE OBTAINED UPON REQUEST.

GUARDRAIL PLACEMENT

STANDARD PLAN C-2

APPROVED FOR PUBLICATION

Clifford E. Mansfield — STATE DESIGN ENGINEER — *01-06-00* — DATE

Washington State Department of Transportation

DATE	REVISION	BY
12/99	ADDED NOTE 6. MODIFIED THE END SECTIONS TO DESIGN "C".	TWS

EFFECTIVE: APRIL 2, 2007 TO JANUARY 6, 2008

EFFECTIVE: APRIL 2, 2007 TO JANUARY 6, 2008

EFFECTIVE: APRIL 2, 2007 TO JANUARY 6, 2008

EFFECTIVE: APRIL 2, 2007 TO JANUARY 6, 2008

DRAWN BY: MARK SUJKA

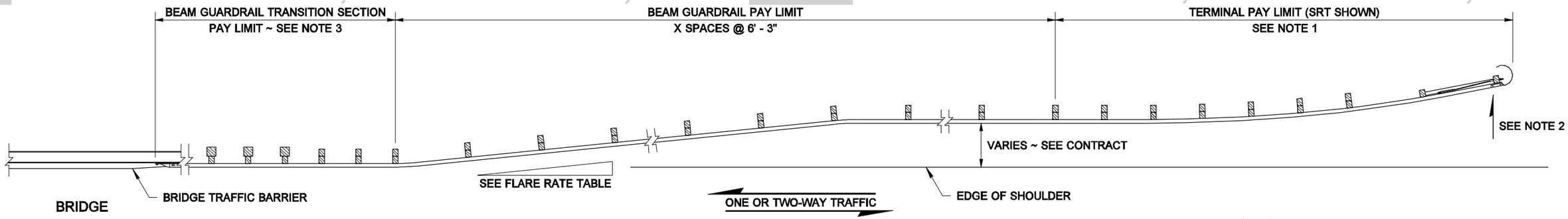

CASE 4

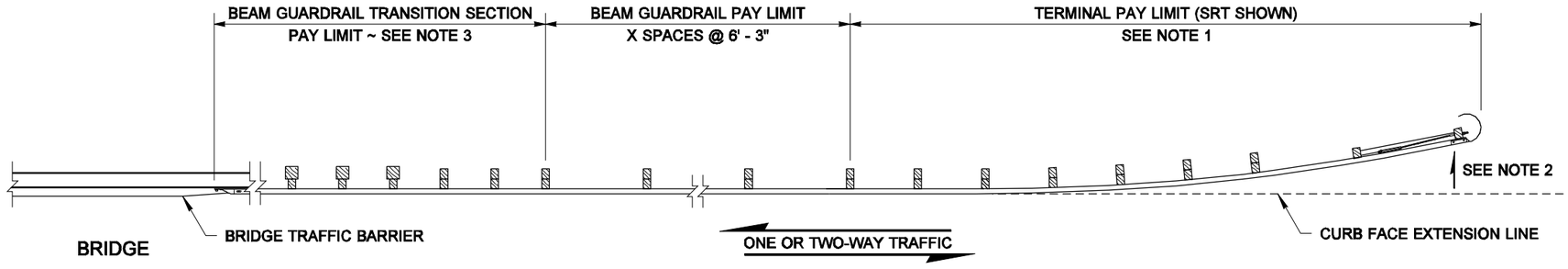

CASE 5

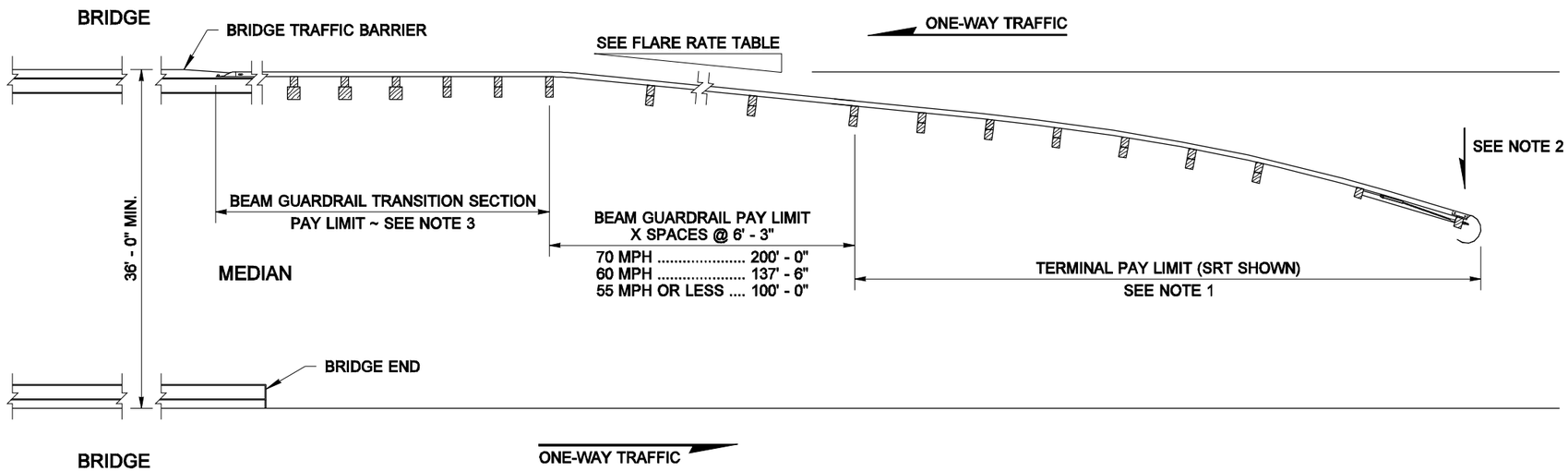

CASE 6

NOTES

1. For terminal type and details, see Contract and applicable Standard Plan(s).
2. The slope from the edge of the shoulder into the face of the guardrail should not be steeper than 10H:1V when the guardrail is within 12' - 0" from the edge of the shoulder.
3. See Contract for Beam Guardrail Transition Section type and Connection to Bridge Traffic Barrier or Concrete Barrier.

FLARE RATE TABLE	
POSTED SPEED (MPH)	**RATE**
70	15 : 1
60	14 : 1
55	12 : 1
50	11 : 1
45	10 : 1
40 OR LESS	9 : 1

RICHARD BARSTOW ALBIN
STATE OF WASHINGTON
34042
REGISTERED
PROFESSIONAL ENGINEER

EXPIRES JULY 24, 2006

NOTE: THIS PLAN IS NOT A LEGAL ENGINEERING DOCUMENT BUT AN ELECTRONIC DUPLICATE. THE ORIGINAL, SIGNED BY THE ENGINEER AND APPROVED FOR PUBLICATION, IS KEPT ON FILE AT THE WASHINGTON STATE DEPARTMENT OF TRANSPORTATION. A COPY MAY BE OBTAINED UPON REQUEST.

GUARDRAIL PLACEMENT

STANDARD PLAN C-2a

SHEET 1 OF 1 SHEET

APPROVED FOR PUBLICATION

Harold J. Peterfeso — STATE DESIGN ENGINEER — *06-21-06* — DATE

Washington State Department of Transportation

DATE	REVISION	BY
05/2006	APPLIED CURRENT DRAFTING STANDARDS	MAS

EFFECTIVE: APRIL 2, 2007 TO JANUARY 6, 2008

EFFECTIVE: APRIL 2, 2007 TO JANUARY 6, 2008

EFFECTIVE: APRIL 2, 2007 TO JANUARY 6, 2008

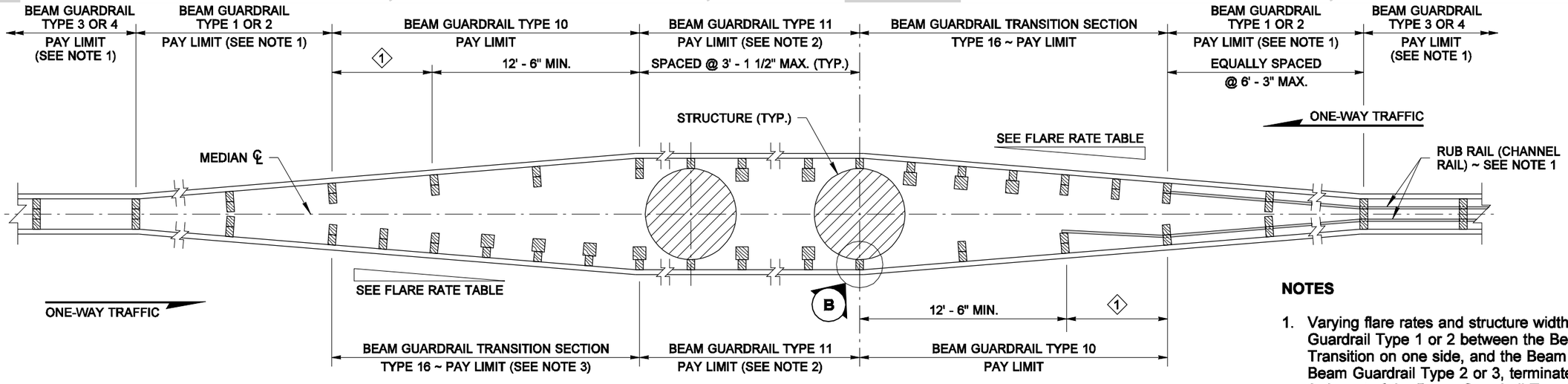

PLAN VIEW
(WOOD POST AND BLOCK SHOWN)

CASE 7

FLARE RATE TABLE	
POSTED SPEED (MPH)	**RATE**
70	15 : 1
60	14 : 1
55	12 : 1
50	11 : 1
45	10 : 1
40 OR LESS	9 : 1

1 THRIE BEAM GUARDRAIL REDUCER SECTION TYPE B

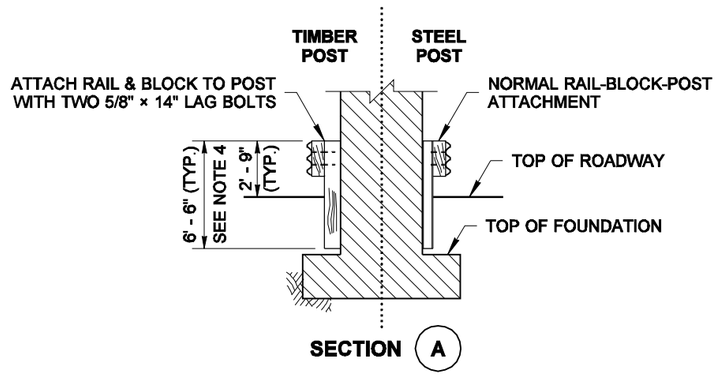

SECTION (A)

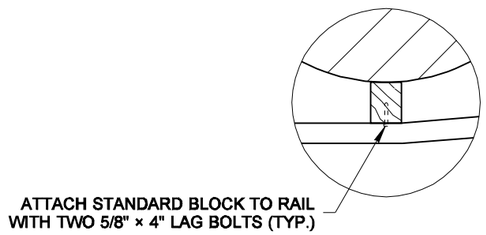

DETAIL (B)

NOTES

1. Varying flare rates and structure widths may require a length of Beam Guardrail Type 1 or 2 between the Beam Guardrail Type 3 or 4 and the Transition on one side, and the Beam Guardrail Type 10 on the other. For Beam Guardrail Type 2 or 3, terminate the rub rail (channel rail) at the first 6×8 post of the Beam Guardrail Transition Section Type 16, and by lapping it behind the second 6×8 post on the Beam Guardrail Type 10 side, or as approved by the Engineer.

2. Use the minimum number of nested 12' - 6" thrie beam sections needed to span the structure. This run may extend past the end of the structure, and an excess of 6' - 3" maximum is acceptable. If the last 12' - 6" section extends more than 6' - 3" (but less than 12' - 6"), use a nested 6' - 3" thrie beam section in its place.

3. The Beam Guardrail Transition Section Type 16 on this end shall terminate at a 10×10 post. Place nested thrie beam with 10×10 posts at 3' - 1 1/2" maximum spacing between the end of the transition and the structure.

4. If full post depth cannot be achieved due to the structure foundation, post length shall be adjusted to the top of foundation. The Beam Guardrail Type 11 post height shall be 2' - 9".

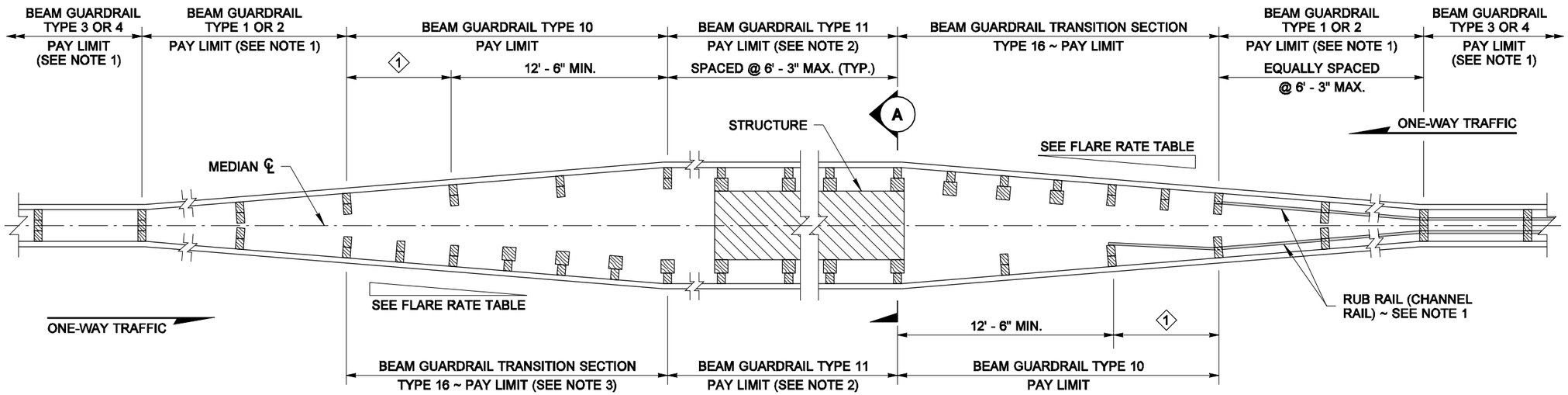

PLAN VIEW
(WOOD POST AND BLOCK SHOWN)

CASE 8



EXPIRES JULY 24, 2006

NOTE: THIS PLAN IS NOT A LEGAL ENGINEERING DOCUMENT BUT AN ELECTRONIC DUPLICATE. THE ORIGINAL, SIGNED BY THE ENGINEER AND APPROVED FOR PUBLICATION, IS KEPT ON FILE AT THE WASHINGTON STATE DEPARTMENT OF TRANSPORTATION. A COPY MAY BE OBTAINED UPON REQUEST.

GUARDRAIL PLACEMENT

STANDARD PLAN C-2b

SHEET 1 OF 1 SHEET

APPROVED FOR PUBLICATION

Harold J. Peterfeso — STATE DESIGN ENGINEER — *06-21-06* DATE

Washington State Department of Transportation

DATE	REVISION	BY
05/2006	OMITTED ATTACHMENT TO STRUCTURE (NOTE 1)	EAB

DRAWN BY: ELENA BRUNSTEIN

EFFECTIVE: APRIL 2, 2007 TO JANUARY 6, 2008

EFFECTIVE: APRIL 2, 2007 TO JANUARY 6, 2008

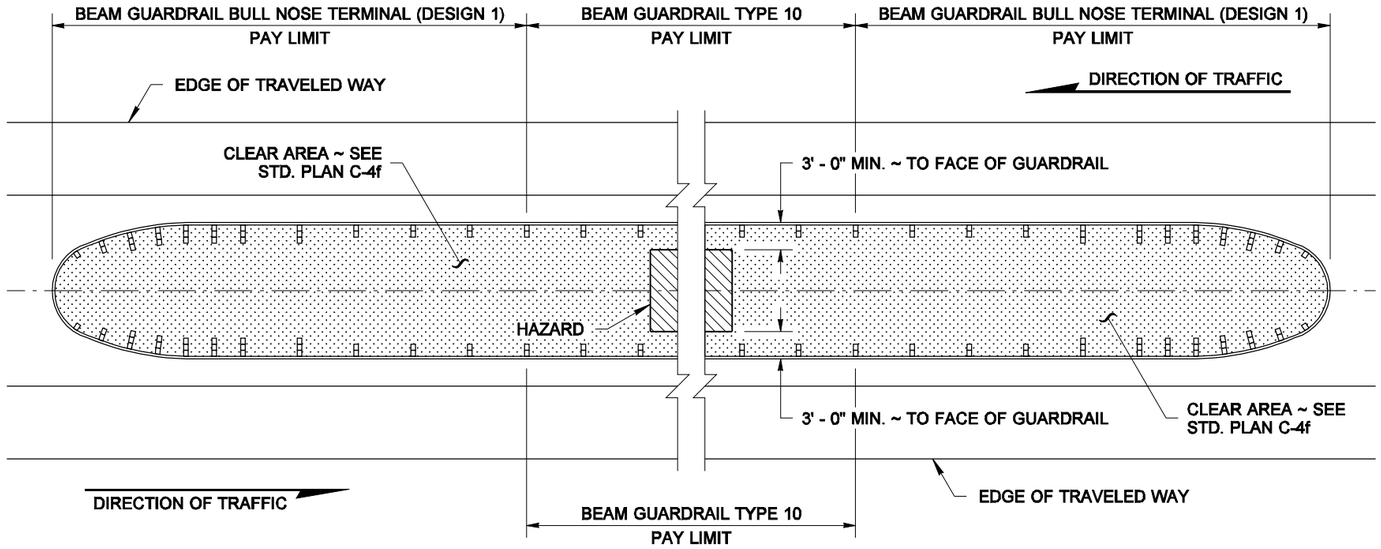

CASE 9A

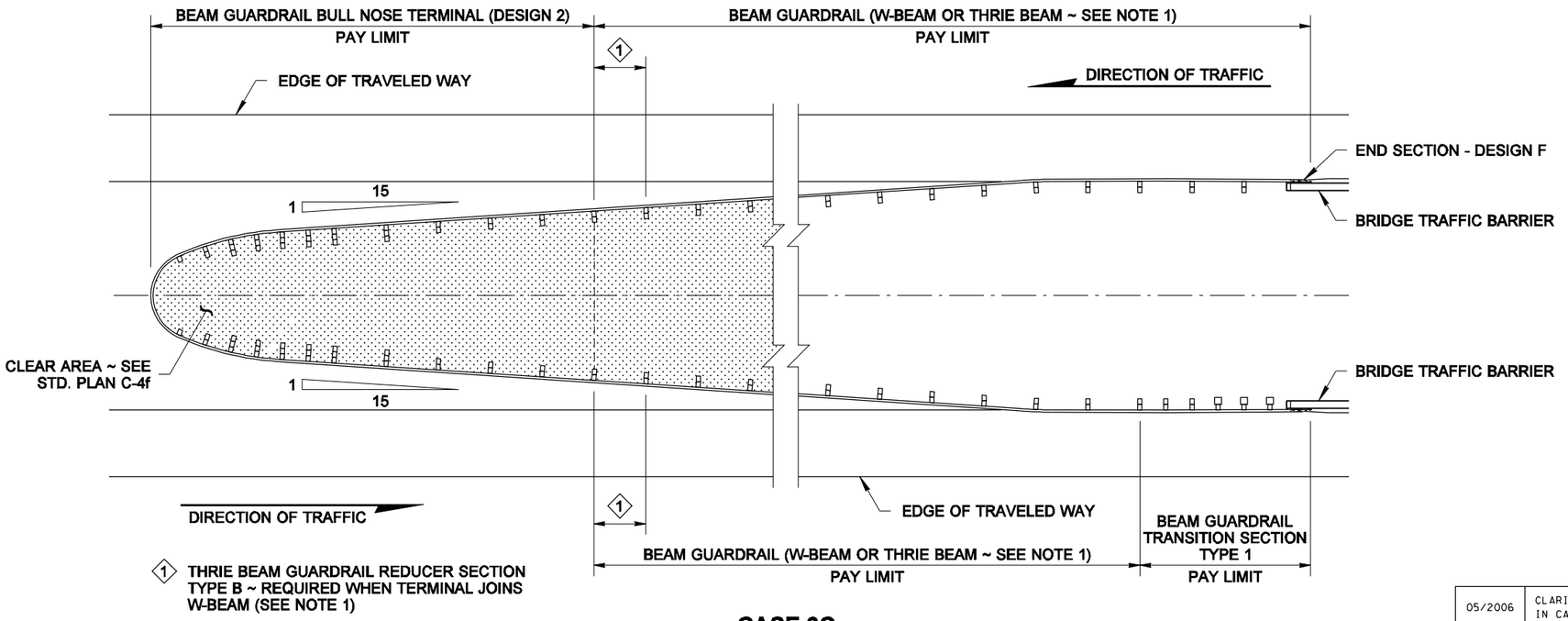

CASE 9C

NOTE

1. **CASE 9C:** Thrie Beam Guardrail is used when the distance from the end of the Bullnose Terminal to the beginning of the transition of the Bridge Rail is less than 100 feet.

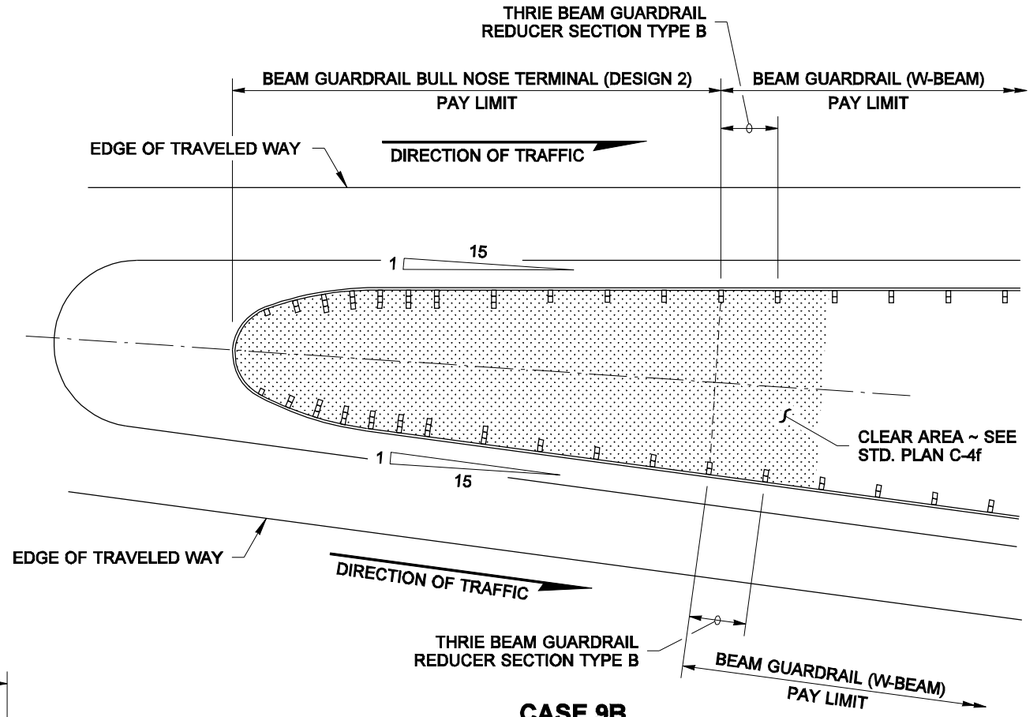

CASE 9B

RICHARD BARSTOW ALBIN
STATE OF WASHINGTON
34042
REGISTERED
PROFESSIONAL ENGINEER

EXPIRES JULY 24, 2006

NOTE: THIS PLAN IS NOT A LEGAL ENGINEERING DOCUMENT BUT AN ELECTRONIC DUPLICATE. THE ORIGINAL, SIGNED BY THE ENGINEER AND APPROVED FOR PUBLICATION, IS KEPT ON FILE AT THE WASHINGTON STATE DEPARTMENT OF TRANSPORTATION. A COPY MAY BE OBTAINED UPON REQUEST.

GUARDRAIL PLACEMENT MEDIAN BULL NOSE

STANDARD PLAN C-2c

SHEET 1 OF 1 SHEET

APPROVED FOR PUBLICATION

Harold J. Peterfeso — STATE DESIGN ENGINEER — *06-21-06* DATE

Washington State Department of Transportation

DATE	REVISION	BY
05/2006	CLARIFIED DIMENSION OF CLEARANCE TO HAZARD IN CASE 9A	WJB

DRAWN BY: BILL BERENS

EFFECTIVE: APRIL 2, 2007 TO JANUARY 6, 2008

EFFECTIVE: APRIL 2, 2007 TO JANUARY 6, 2008

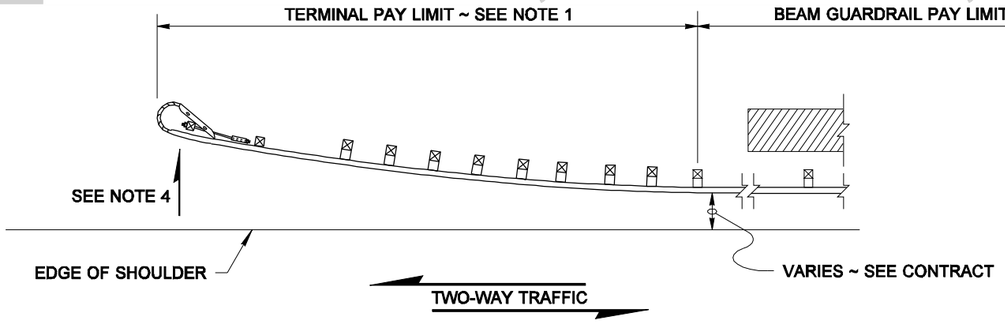

CASE 10A

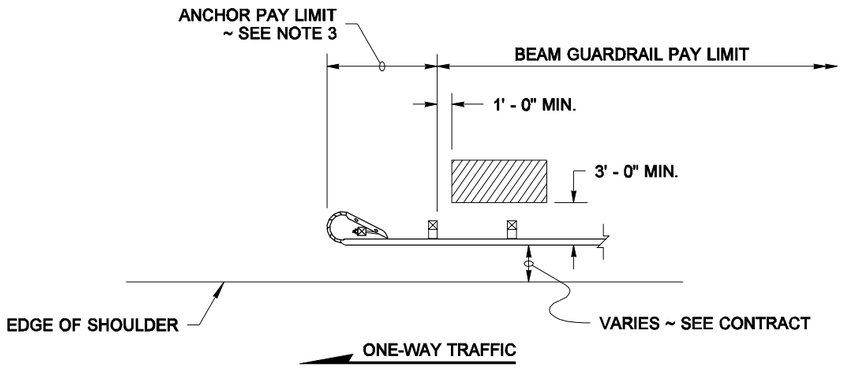

CASE 10B

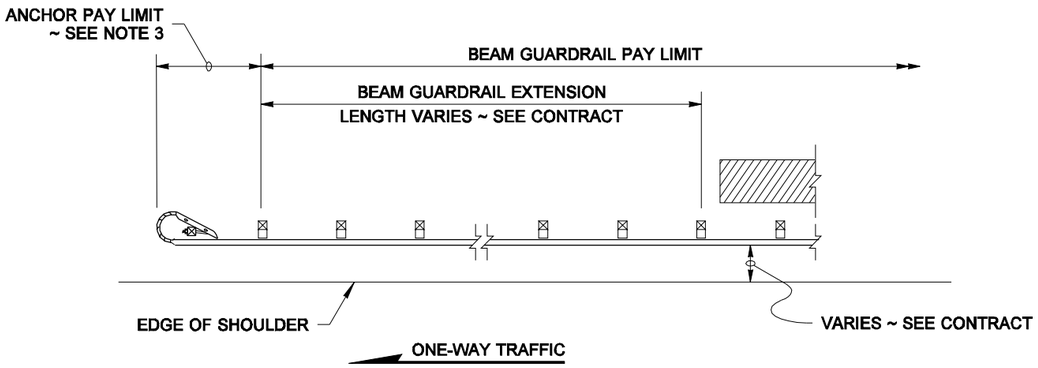

CASE 10C

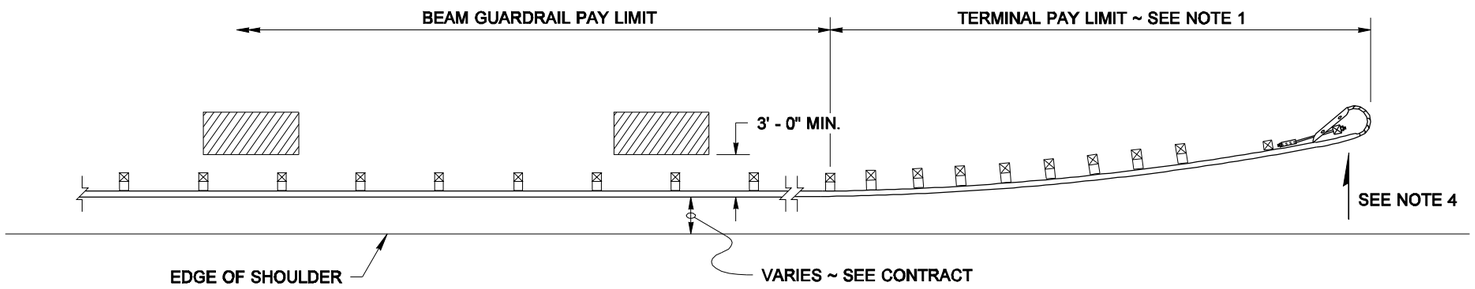

ONE-WAY TRAFFIC
OR
TWO-WAY TRAFFIC

CASE 10 A, B, or C

NOTES

1. SRT Terminal shown, for terminal type and details, see Contract or applicable Standard Plan(s).
2. Post spacing is 6' - 3" except where noted.
3. Type 4 anchor required. See applicable Standard Plan(s).
4. The slope from the edge of the shoulder into the face of the guardrail should not exceed 10H:1V when the guardrail is within 12' - 0" from the edge of the shoulder.

RICHARD BARSTOW ALBIN
STATE OF WASHINGTON
34042
REGISTERED
PROFESSIONAL ENGINEER

EXPIRES JULY 24, 2006

NOTE: THIS PLAN IS NOT A LEGAL ENGINEERING DOCUMENT BUT AN ELECTRONIC DUPLICATE. THE ORIGINAL, SIGNED BY THE ENGINEER AND APPROVED FOR PUBLICATION, IS KEPT ON FILE AT THE WASHINGTON STATE DEPARTMENT OF TRANSPORTATION. A COPY MAY BE OBTAINED UPON REQUEST.

GUARDRAIL PLACEMENT

STANDARD PLAN C-2d

SHEET 1 OF 1 SHEET

APPROVED FOR PUBLICATION

Harold J. Peterfeso — STATE DESIGN ENGINEER — *06-21-06* DATE

Washington State Department of Transportation

DATE	REVISION	BY
05/2006	CLARIFIED DIMENSION OF CLEARANCE FOR HAZARD	MAS

EFFECTIVE: APRIL 2, 2007 TO JANUARY 6, 2008

EFFECTIVE: APRIL 2, 2007 TO JANUARY 6, 2008
EFFECTIVE: APRIL 2, 2007 TO JANUARY 6, 2008

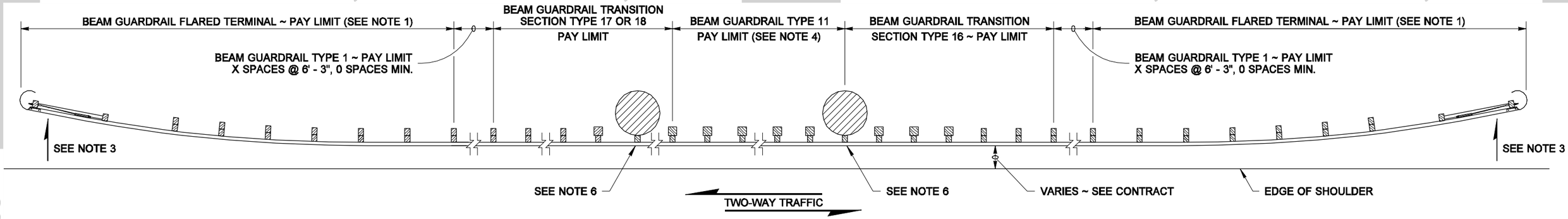

CASE 11A

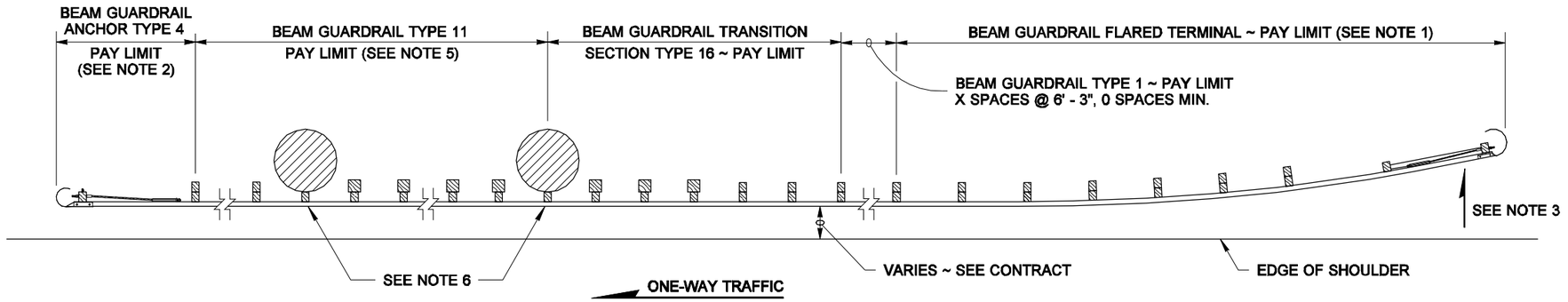

CASE 11B

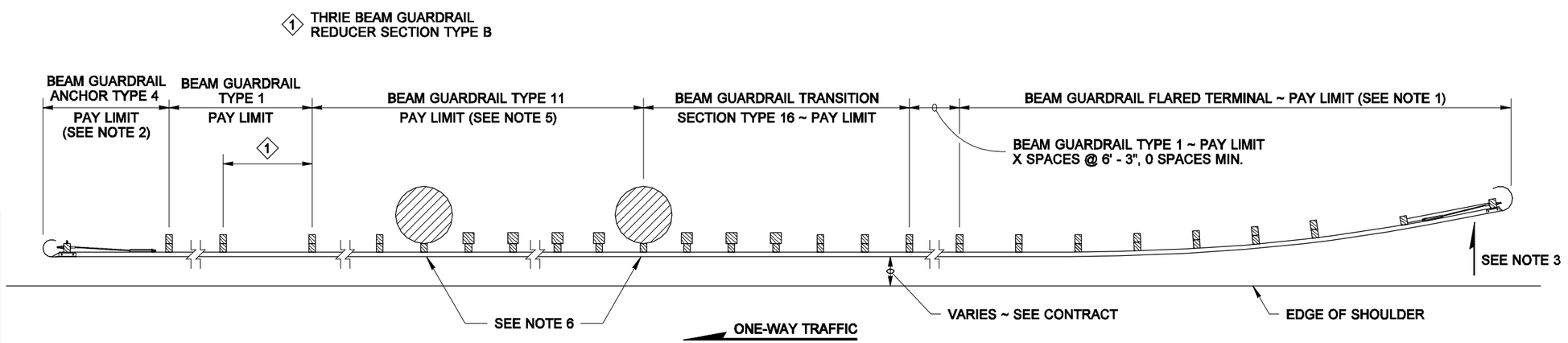

CASE 11C

NOTES

1. SRT Terminal shown. For terminal type and details see Contract and applicable Standard Plan(s).
2. Beam Guardrail Anchor Type 4 (W-Beam) or Type 4 (Thrie Beam) required.
3. The slope from the edge of the shoulder into the face of the guardrail should not exceed 10H:1V when the guardrail is within 12' - 0" from the edge of the shoulder.
4. If the distance from end of Beam Guardrail Type 11 to the structure exceeds 6' - 3" using 12' - 6" thrie beam sections, add a 6' - 3" nested section of thrie beam with 10×10 posts, spaced at 3' - 1 1/2" maximum, and begin transition.
5. Guardrail post spacing for Beam Guardrail Type 11 past the end of the structure shall be spaced at 6' - 3" maximum with 6×8 post and standard block.
6. Attach the standard wood block to the rail using two 5/8" × 4" lag bolts.

RICHARD BARSTOW ALBIN
STATE OF WASHINGTON
34042
REGISTERED
PROFESSIONAL ENGINEER

EXPIRES JULY 24, 2006

NOTE: THIS PLAN IS NOT A LEGAL ENGINEERING DOCUMENT BUT AN ELECTRONIC DUPLICATE. THE ORIGINAL, SIGNED BY THE ENGINEER AND APPROVED FOR PUBLICATION, IS KEPT ON FILE AT THE WASHINGTON STATE DEPARTMENT OF TRANSPORTATION. A COPY MAY BE OBTAINED UPON REQUEST.

GUARDRAIL PLACEMENT

STANDARD PLAN C-2e

SHEET 1 OF 1 SHEET

APPROVED FOR PUBLICATION

Harold J. Peterfeso — STATE DESIGN ENGINEER — *06-21-06* — DATE

Washington State Department of Transportation

DATE	REVISION	BY
05/2006	OMITTED ATTACHMENT TO STRUCTURE (NOTE 2)	EAB

DRAWN BY: ELENA BRUNSTEIN

EFFECTIVE: APRIL 2, 2007 TO JANUARY 6, 2008
EFFECTIVE: APRIL 2, 2007 TO JANUARY 6, 2008

EFFECTIVE: APRIL 2, 2007 TO JANUARY 6, 2008

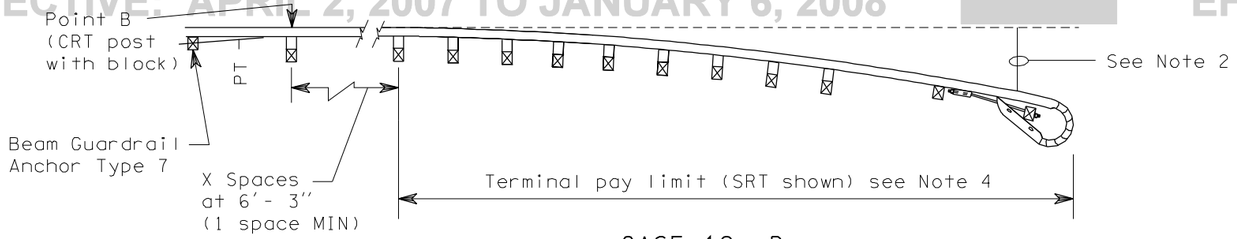

CASE 12 _D
(see Note 7)

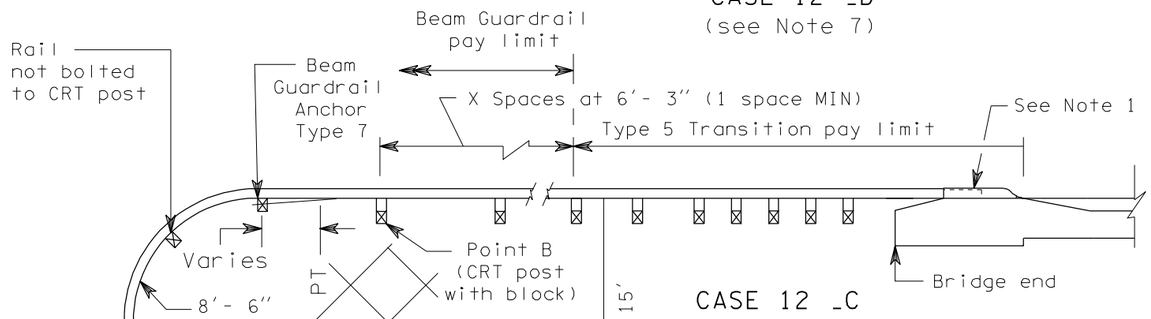

CASE 12 _C
(see Note 7)

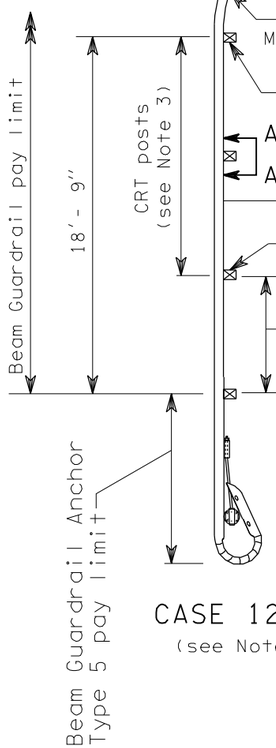

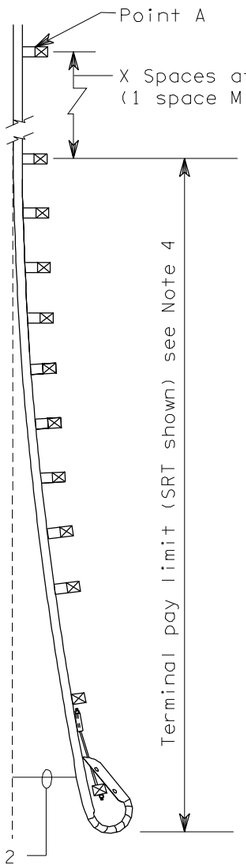

CASE 12 B_
(see Note 7)

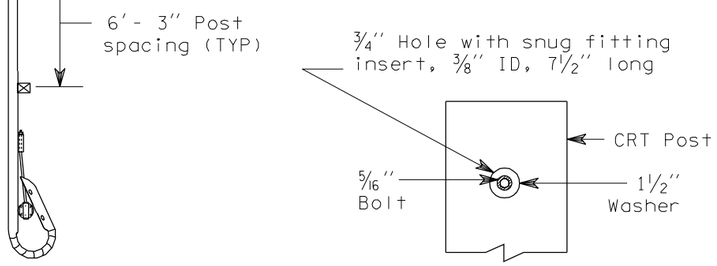

SECTION A-A

CASE 12 A_
(see Note 8)

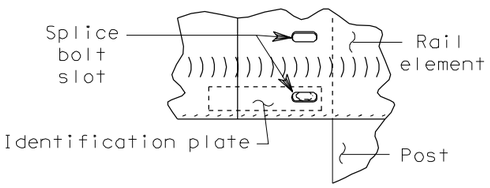

IDENTIFICATION PLATE
MOUNTING DETAIL
(see Note 6)

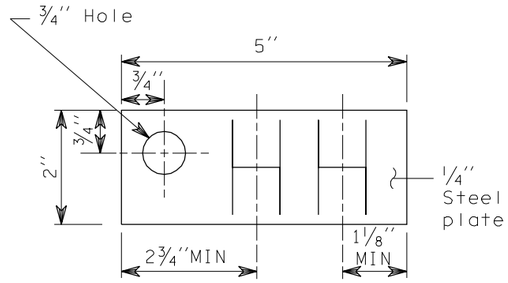

IDENTIFICATION PLATE
(see Note 5)

NOTES

1. See Contract for guardrail connection to bridge rail and concrete barrier.
2. The slope from the edge of the shoulder into the face of the guardrail should not be steeper than 10:1.
3. Attach to rail with 5/16" x 9" long bolt, nut and 1½" washer on back of post.
4. For terminal type and details, see Contract and applicable Standard Plan(s).
5. Radius dimensions shall be etched into plate replacing the letters "HH", shown on the Identification Plate Detail. Digits shall be 1½" MIN height and ¾" MAX width. The plate shall be galvanized after etching.
6. The guardrail radius Identification Plate shall be mounted on the back side of the Rail Element using the lowest splice bolt at the P.C. of the guardrail radius.
7. First letter of case designation placement indicates end treatment on side road. Second letter indicates end treatment on main road. For instance, a Type 5 Anchor on the side road and a bridge connection on the main road would be Case 12 AC.
8. For the 8'- 6" radius, five CRT posts are required including the CRT post at point B.
9. For CRT post details, see Standard Plan "Beam Guardrail Posts and Blocks".

GUARDRAIL PLACEMENT
WEAK POST INTERSECTION DESIGN (8'- 6" MAX RADIUS)

CLIFFORD E. MANSFIELD
STATE OF WASHINGTON
15224
REGISTERED
PROFESSIONAL ENGINEER
EXPIRES MAY 3, 1998

NOTE: THIS PLAN IS NOT A LEGAL ENGINEERING DOCUMENT UNLESS IT BEARS THE ORIGINAL WET SIGNATURE OF THE ENGINEER AND APPROVED FOR PUBLICATION. IT IS RESPECTFULLY REQUESTED THAT THE WASHINGTON STATE DEPARTMENT OF TRANSPORTATION BE HELD HARMLESS FOR ANY UNAUTHORIZED USE OF THIS PLAN. A COPY MAY BE OBTAINED UPON REQUEST.

STANDARD PLAN C-2f

APPROVED FOR PUBLICATION

Donald K. Nelson — STATE DESIGN ENGINEER — *3/14/97* — DATE

WASHINGTON STATE DEPARTMENT OF TRANSPORTATION
OLYMPIA, WASHINGTON

EFFECTIVE: APRIL 2, 2007 TO JANUARY 6, 2008

EFFECTIVE: APRIL 2, 2007 TO JANUARY 6, 2008

DRAWN BY: MARK SUJKA

REQUIREMENTS			
RADIUS	NUMBER OF CRT POSTS (SEE NOTE 3)	CLEAR AREA	
		L	W
17'- 0"	6	30'	15'
25'- 6"	8	40'	20'
35'- 0"	11	50'	20'

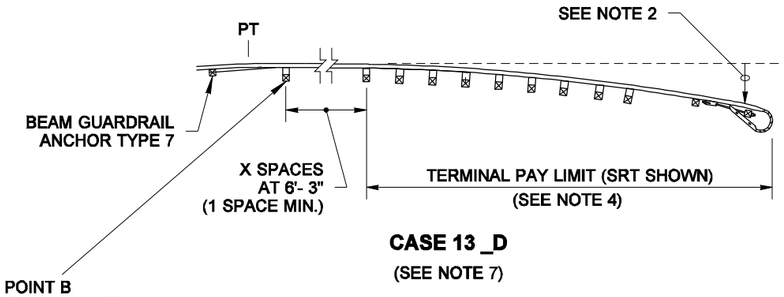

CASE 13 _D
(SEE NOTE 7)

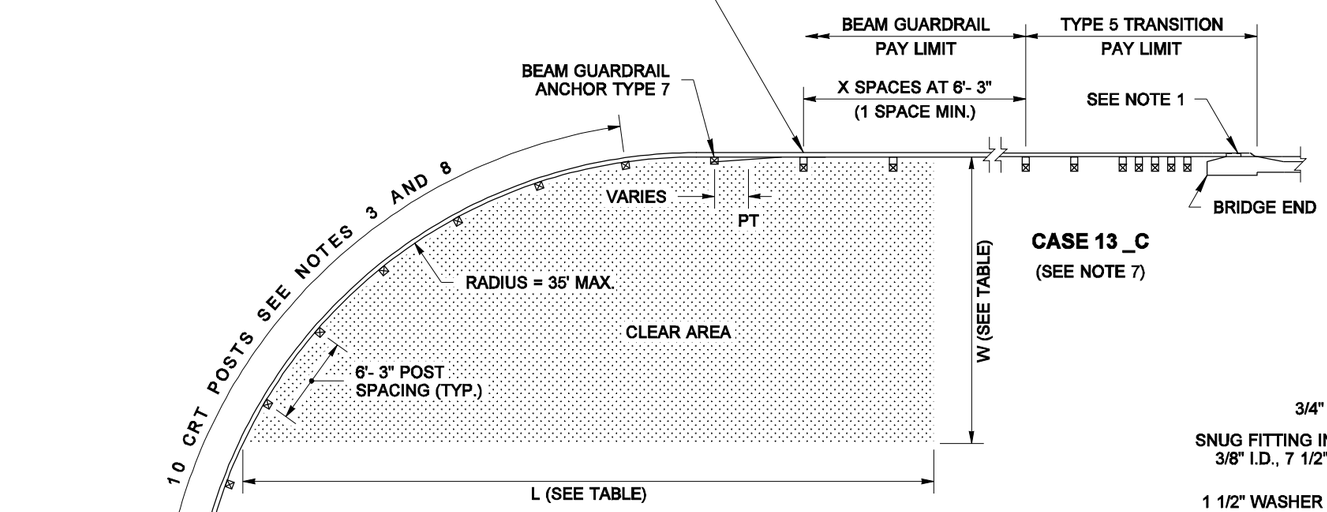

CASE 13 _C
(SEE NOTE 7)

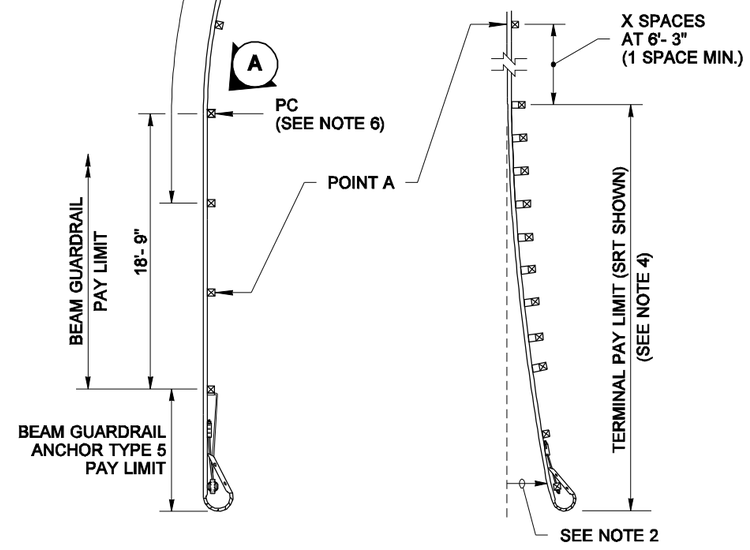

CASE 13 A_
(SEE NOTE 7)

CASE 13 B_
(SEE NOTE 7)

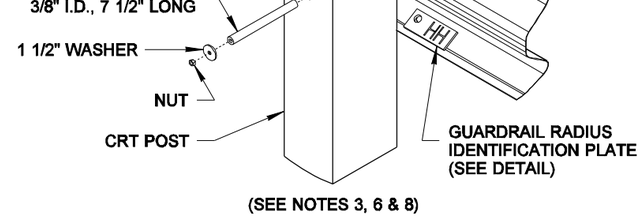

(SEE NOTES 3, 6 & 8)

VIEW (A)

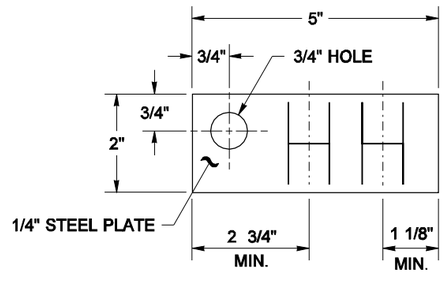

(SEE NOTE 5)

GUARDRAIL RADIUS IDENTIFICATION PLATE DETAIL

NOTES

1. See Contract Plans for guardrail connection to bridge rail and concrete barrier.
2. The slope from the edge of the shoulder into the face of the guardrail should not be steeper than 10:1.
3. Fewer CRT posts are required for smaller radii; include CRT Post at Point B. Attach guardrail to post with a 5/16" x 9" long bolt, a 3/8" I.D. x 7 1/2" snug fitting insert, and a 1 1/2" washer with nut on back of post.
4. For terminal type and details, see Contract and applicable Standard Plan(s).
5. Radius dimensions shall be etched into plate replacing the letters "HH", shown on the GUARDRAIL RADIUS IDENTIFICATION PLATE DETAIL. Digits shall be 1 1/2" minimum height and 3/4" maximum width. Plate shall be galvanized after etching.
6. The guardrail radius Identification Plate shall be mounted on the back side of the rail element using the lowest splice bolt nearest the PC of the guardrail radius (See View A).
7. The first letter of the Case Designation indicates the end treatment on the side road. The second letter indicates the end treatment on the main road. For example, a Type 5 Anchor on the side road with a bridge connection on the main road would be Case 13 AC, the combination shown.
8. For CRT post details, see Standard Plan C-1b.

CLIFFORD E. MANSFIELD — STATE OF WASHINGTON — 15224 — REGISTERED PROFESSIONAL ENGINEER

EXPIRES MAY 3, 2002

NOTE: THIS PLAN IS NOT A LEGAL ENGINEERING DOCUMENT BUT AN ELECTRONIC DUPLICATE. THE ORIGINAL, SIGNED BY THE ENGINEER AND APPROVED FOR PUBLICATION, IS KEPT ON FILE AT THE WASHINGTON STATE DEPARTMENT OF TRANSPORTATION. A COPY MAY BE OBTAINED UPON REQUEST.

GUARDRAIL PLACEMENT WEAK POST INTERSECTION DESIGN (35' MAX. RADIUS)

STANDARD PLAN C-2g

APPROVED FOR PUBLICATION

Clifford E. Mansfield — STATE DESIGN ENGINEER — *07-27-01* — DATE

Washington State Department of Transportation

DATE	REVISION	BY
7/01	CORRECTED NOTES; ADDED "VIEW A"	MAS

EFFECTIVE: APRIL 2, 2007 TO JANUARY 6, 2008

EFFECTIVE: APRIL 2, 2007 TO JANUARY 6, 2008
EFFECTIVE: APRIL 2, 2007 TO JANUARY 6, 2008

NOTES

1. For Service Level 1, Weak Post Bridge Rail System, see Contract.
2. SRT Terminal shown. For Terminal type and details, see Contract and applicable Standard Plan(s).
3. The slope from the edge of the shoulder into the face of the guardrail should not be steeper than 10:1.
4. See Standard Plan "Beam Guardrail Posts and Blocks".

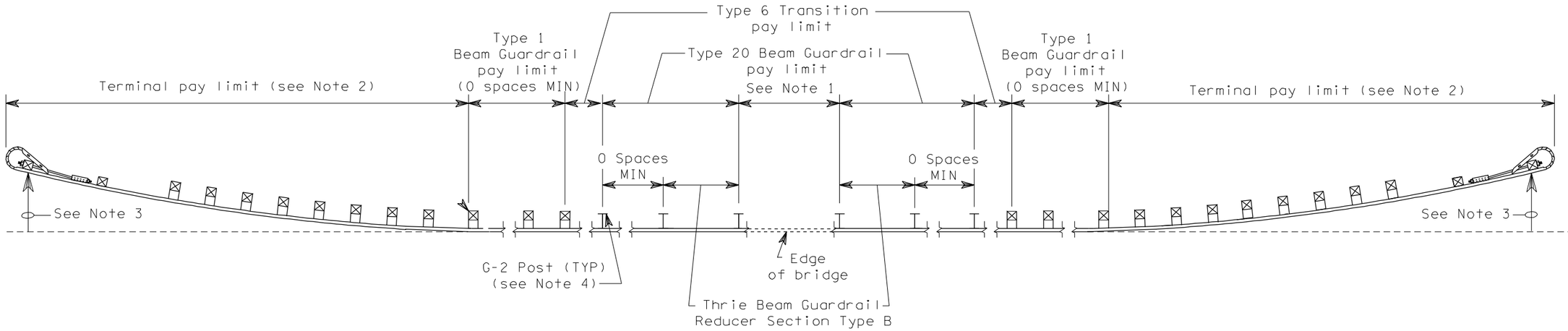

CASE 14

GUARDRAIL PLACEMENT

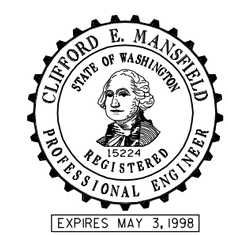

NOTE: THIS PLAN IS NOT A LEGAL ENGINEERING DOCUMENT BUT AN ELECTRONIC DUPLICATE. THE ORIGINAL SIGNED BY THE ENGINEER AND APPROVED FOR PUBLICATION, IS KEPT ON FILE AT THE WASHINGTON STATE DEPARTMENT OF TRANSPORTATION. A COPY MAY BE OBTAINED UPON REQUEST.

STANDARD PLAN C-2h

APPROVED FOR PUBLICATION

Donald K. Nelson — 3/28/97

STATE DESIGN ENGINEER — DATE

WASHINGTON STATE DEPARTMENT OF TRANSPORTATION
OLYMPIA, WASHINGTON

EFFECTIVE: APRIL 2, 2007 TO JANUARY 6, 2008
EFFECTIVE: APRIL 2, 2007 TO JANUARY 6, 2008
EFFECTIVE: APRIL 2, 2007 TO JANUARY 6, 2008
EFFECTIVE: APRIL 2, 2007 TO JANUARY 6, 2008

EFFECTIVE: APRIL 2, 2007 TO JANUARY 6, 2008

NOTES

1. SRT Terminal shown. For Terminal type and details, see Contract and applicable Standard Plan(s).
2. The slope from the edge of the shoulder into the face of the guardrail should not be steeper than 10:1 .
3. See Standard Plan for Box Culvert Guardrail Steel Post.
4. For spans up to 18′- 9″, see Standard Plan for Guardrail Placement Cases 19, 20, and 21.

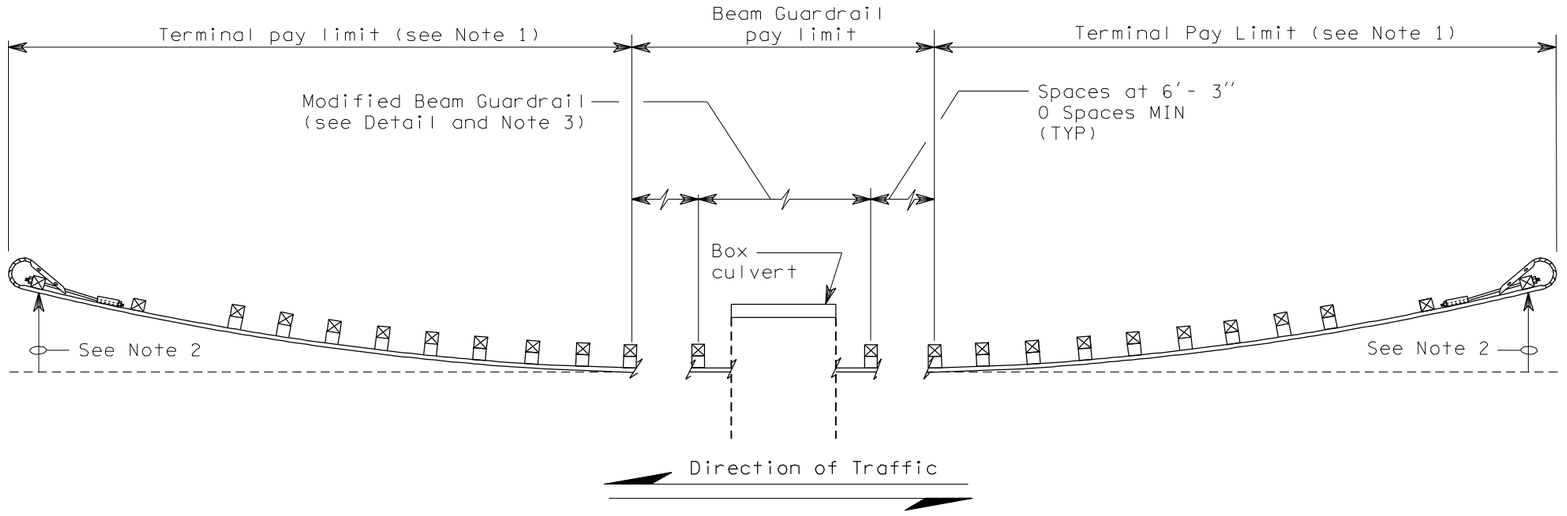

CASE 15

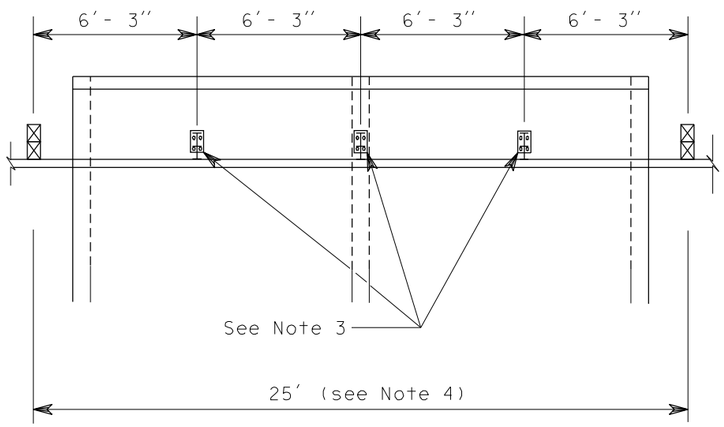

DETAIL

GUARDRAIL PLACEMENT

CLIFFORD E. MANSFIELD
STATE OF WASHINGTON
15224
REGISTERED
PROFESSIONAL ENGINEER
EXPIRES MAY 3, 1998

NOTE: THIS PLAN IS NOT A LEGAL ENGINEERING DOCUMENT UNLESS IT HAS BEEN SIGNED, DATED AND SEALED BY THE ENGINEER AND APPROVED FOR PUBLICATION. IS KEPT ON FILE AT THE WASHINGTON STATE DEPARTMENT OF TRANSPORTATION. A COPY MAY BE OBTAINED UPON REQUEST.

STANDARD PLAN C-2i

APPROVED FOR PUBLICATION

Donald K. Nelson — STATE DESIGN ENGINEER — *3/28/97* — DATE

WASHINGTON STATE DEPARTMENT OF TRANSPORTATION
OLYMPIA, WASHINGTON

EFFECTIVE: APRIL 2, 2007 TO JANUARY 6, 2008

EFFECTIVE: APRIL 2, 2007 TO JANUARY 6, 2008

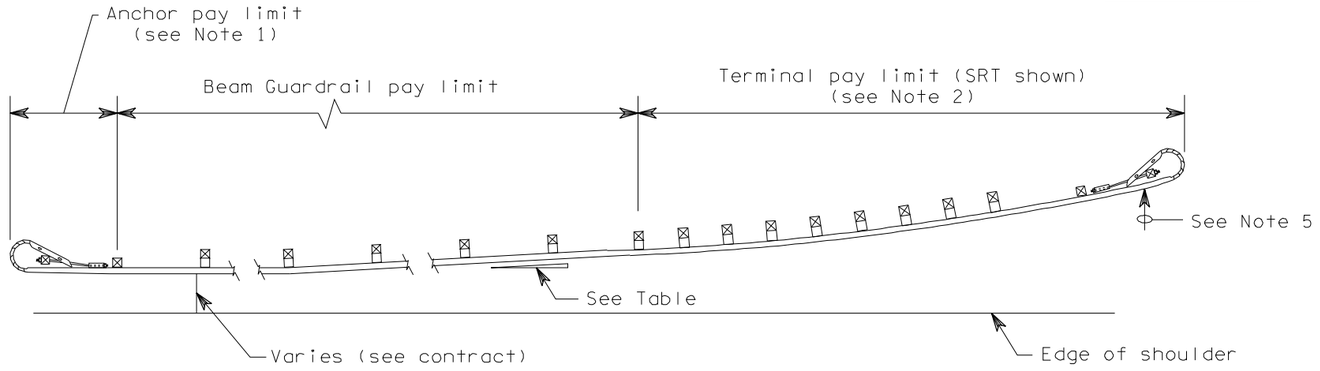

One Way Traffic

CASE 16

NOTES

1. Type 4 anchor required. For details, see applicable Standard Plan(s).
2. For terminal type and details, see contract and applicable Standard Plan(s).
3. Post spacing is 6'-3" except where noted.
4. For guardrail to bridge rail connection see applicable Standard Plan(s) or Contract.
5. The slope from the edge of the shoulder into the face of the guardrail should not be steeper than 10:1 when the guardrail is within 12'-0" from the edge of the shoulder. Beyond 12'-0", the slope shall not be steeper than 6:1.

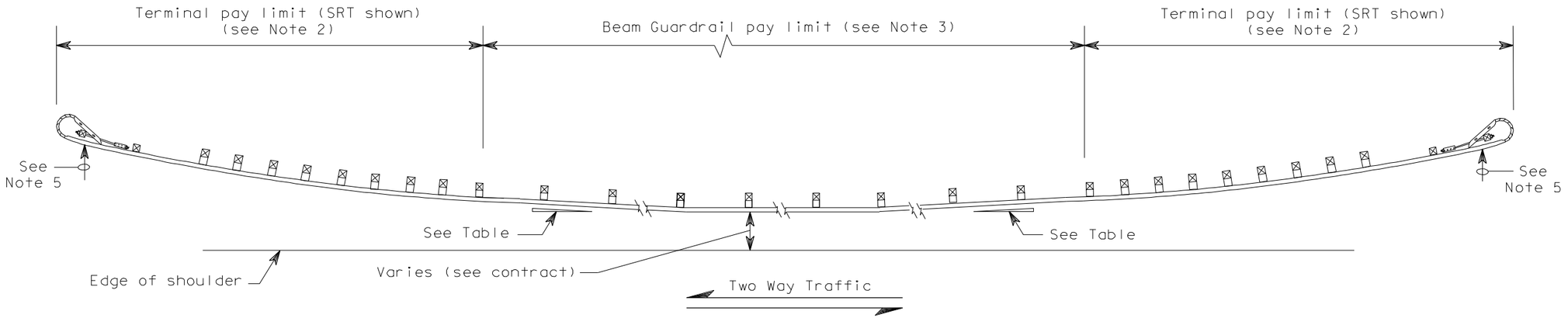

Two Way Traffic

CASE 17

FLARE RATE TABLE	
Rate	Posted Speed (MPH)
15:1	70
14:1	60
12:1	55
11:1	50
10:1	45
9:1	40 or less

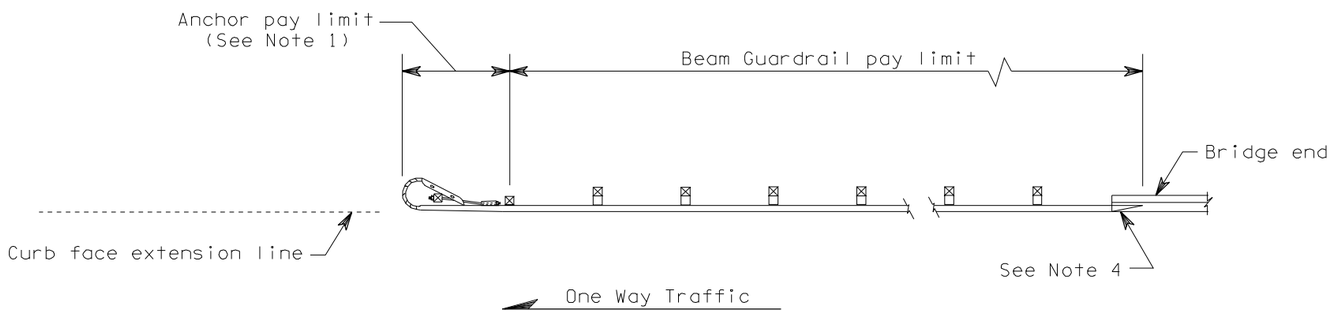

One Way Traffic

CASE 18



EXPIRES MAY 3, 2000

NOTE: THIS PLAN IS NOT A LEGAL ENGINEERING DOCUMENT BUT AN ELECTRONIC DUPLICATE. THE ORIGINAL, SIGNED BY THE ENGINEER AND APPROVED FOR PUBLICATION, IS KEPT ON FILE AT THE WASHINGTON STATE DEPARTMENT OF TRANSPORTATION. A COPY MAY BE OBTAINED UPON REQUEST.

GUARDRAIL PLACEMENT

STANDARD PLAN C-2j

APPROVED FOR PUBLICATION

Clifford E. Mansfield — DEPUTY STATE DESIGN ENGINEER

6/12/98 — DATE

WASHINGTON STATE DEPARTMENT OF TRANSPORTATION
OLYMPIA, WASHINGTON

DATE	REVISION	BY
5/98	Revise Flair Rate Table.	RBA

EFFECTIVE: APRIL 2, 2007 TO JANUARY 6, 2008

EFFECTIVE: APRIL 2, 2007 TO JANUARY 6, 2008

DRAWN BY: MARK SUJKA

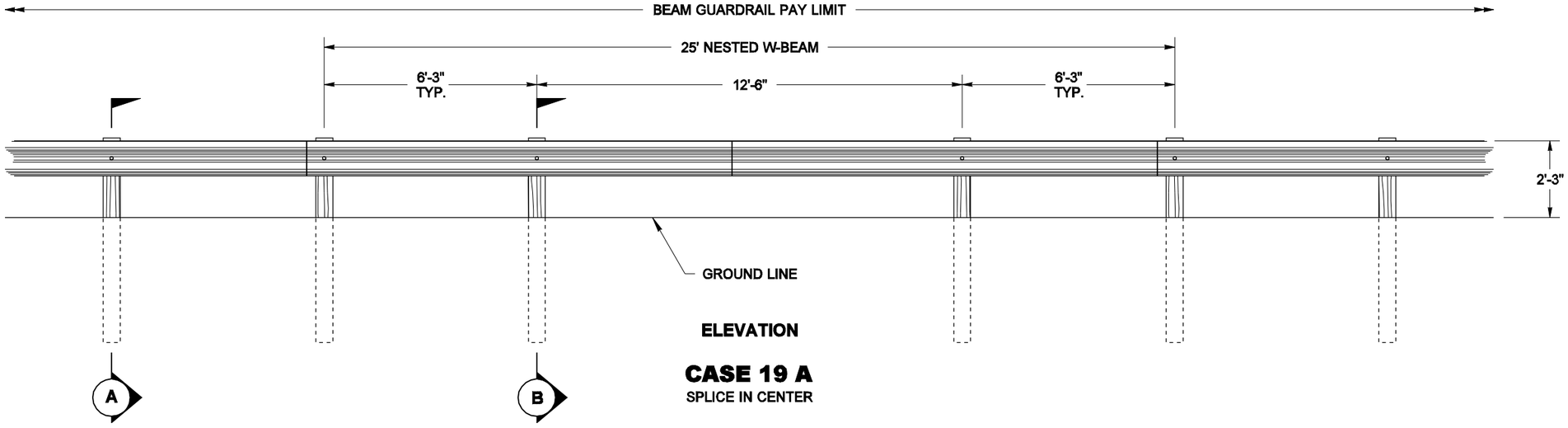

ELEVATION

CASE 19 A

SPLICE IN CENTER

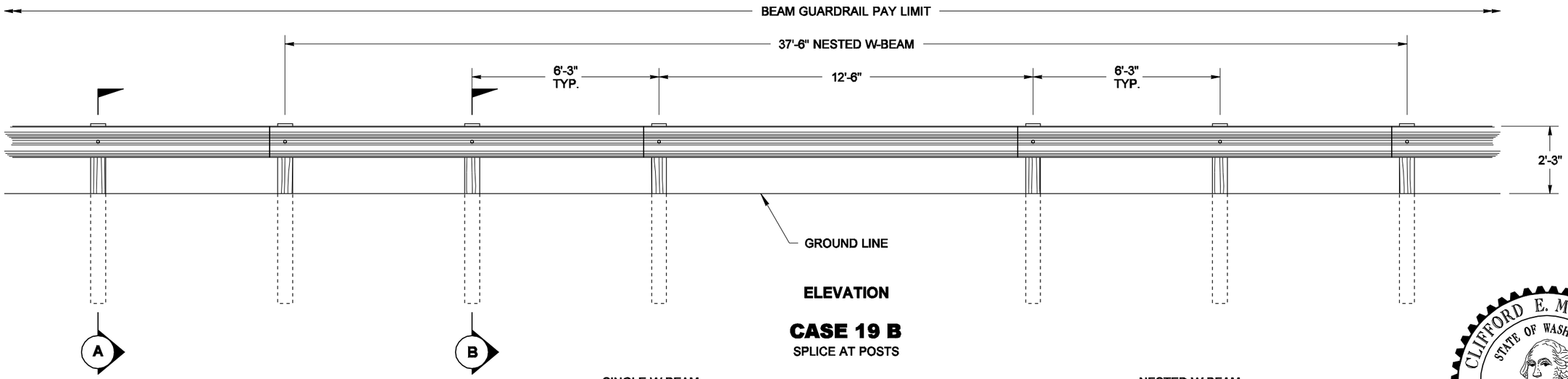

ELEVATION

CASE 19 B

SPLICE AT POSTS

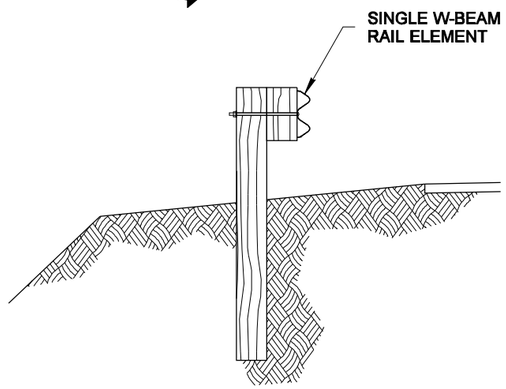

SECTION A

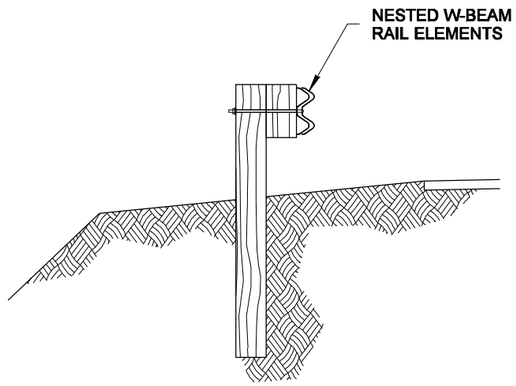

SECTION B



EXPIRES MAY 3, 2002

NOTE: THIS PLAN IS NOT A LEGAL ENGINEERING DOCUMENT BUT AN ELECTRONIC DUPLICATE. THE ORIGINAL, SIGNED BY THE ENGINEER AND APPROVED FOR PUBLICATION, IS KEPT ON FILE AT THE WASHINGTON STATE DEPARTMENT OF TRANSPORTATION. A COPY MAY BE OBTAINED UPON REQUEST.

GUARDRAIL PLACEMENT 12'-6" SPAN

STANDARD PLAN C-2k

APPROVED FOR PUBLICATION

Clifford E. Mansfield — *07-27-01*

STATE DESIGN ENGINEER — DATE

Washington State Department of Transportation

EFFECTIVE: APRIL 2, 2007 TO JANUARY 6, 2008

EFFECTIVE: APRIL 2, 2007 TO JANUARY 6, 2008
EFFECTIVE: APRIL 2, 2007 TO JANUARY 6, 2008

DRAWN BY: MARK SUJKA

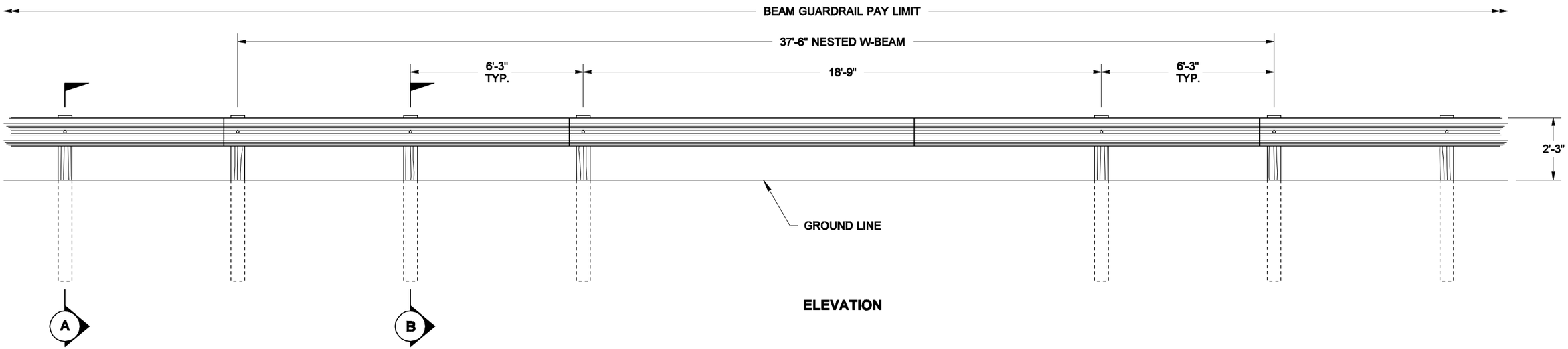

ELEVATION

CASE 20

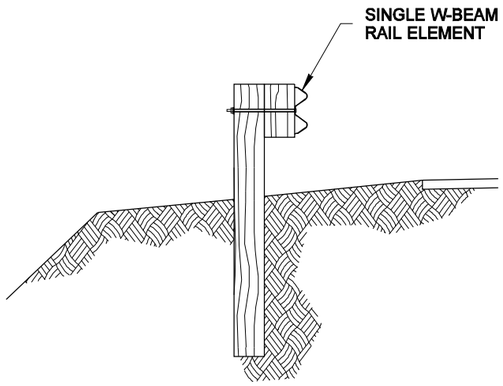

SECTION (A)

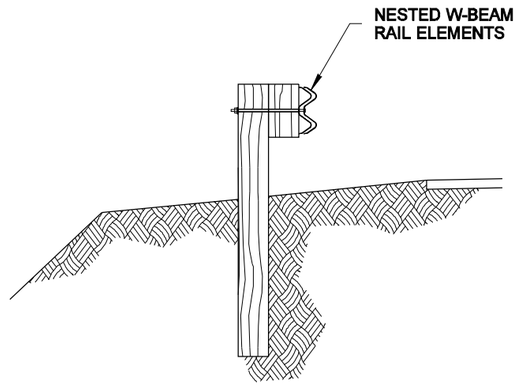

SECTION (B)

CLIFFORD E. MANSFIELD
STATE OF WASHINGTON
15224
REGISTERED
PROFESSIONAL ENGINEER

EXPIRES MAY 3, 2002

NOTE: THIS PLAN IS NOT A LEGAL ENGINEERING DOCUMENT BUT AN ELECTRONIC DUPLICATE. THE ORIGINAL, SIGNED BY THE ENGINEER AND APPROVED FOR PUBLICATION, IS KEPT ON FILE AT THE WASHINGTON STATE DEPARTMENT OF TRANSPORTATION. A COPY MAY BE OBTAINED UPON REQUEST.

GUARDRAIL PLACEMENT
18'-9" SPAN

STANDARD PLAN C-2n

APPROVED FOR PUBLICATION

Clifford E. Mansfield — STATE DESIGN ENGINEER

07-27-01 — DATE

Washington State Department of Transportation

EFFECTIVE: APRIL 2, 2007 TO JANUARY 6, 2008
EFFECTIVE: APRIL 2, 2007 TO JANUARY 6, 2008

EFFECTIVE: APRIL 2, 2007 TO JANUARY 6, 2008

EFFECTIVE: APRIL 2, 2007 TO JANUARY 6, 2008

DRAWN BY: MARK SUJKA

NOTES

1. See Standard Plan C-1b for additional details.
2. One-way traffic layouts are identical to the two-way layout with the exception that only the posts trailing the span need to be CRT's with double blocks.

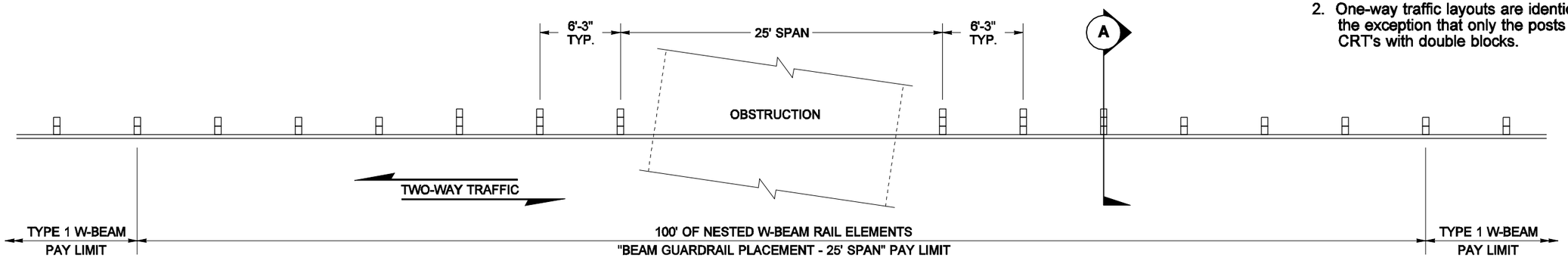

PLAN

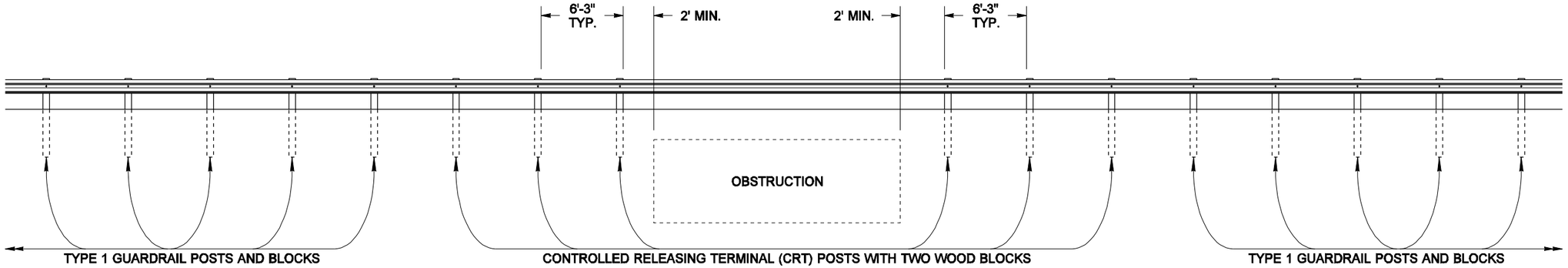

ELEVATION

CASE 21

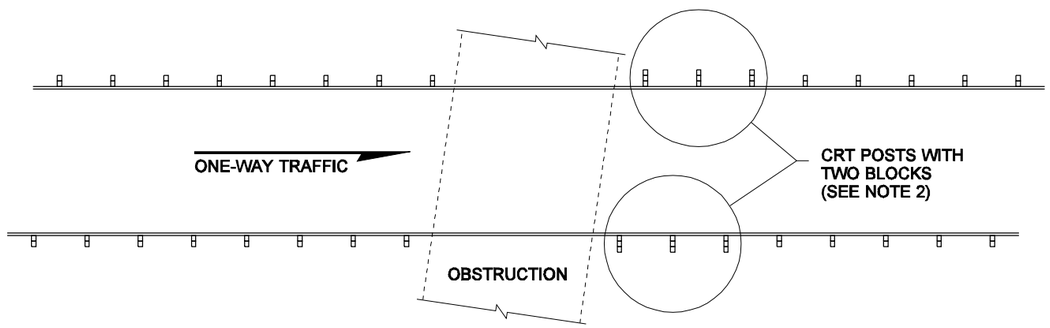

ONE-WAY TRAFFIC LAYOUT

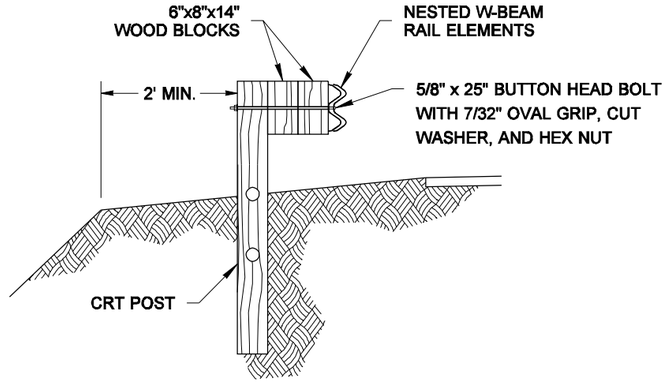

SECTION (A)

CLIFFORD E. MANSFIELD
STATE OF WASHINGTON
15224
REGISTERED
PROFESSIONAL ENGINEER

EXPIRES MAY 3, 2002

NOTE: THIS PLAN IS NOT A LEGAL ENGINEERING DOCUMENT BUT AN ELECTRONIC DUPLICATE. THE ORIGINAL, SIGNED BY THE ENGINEER AND APPROVED FOR PUBLICATION, IS KEPT ON FILE AT THE WASHINGTON STATE DEPARTMENT OF TRANSPORTATION. A COPY MAY BE OBTAINED UPON REQUEST.

GUARDRAIL PLACEMENT 25' SPAN

STANDARD PLAN C-2o

APPROVED FOR PUBLICATION

Clifford E. Mansfield — *07-13-01*

STATE DESIGN ENGINEER — DATE

Washington State Department of Transportation

EFFECTIVE: APRIL 2, 2007 TO JANUARY 6, 2008

EFFECTIVE: APRIL 2, 2007 TO JANUARY 6, 2008

EFFECTIVE: APRIL 2, 2007 TO JANUARY 6, 2008

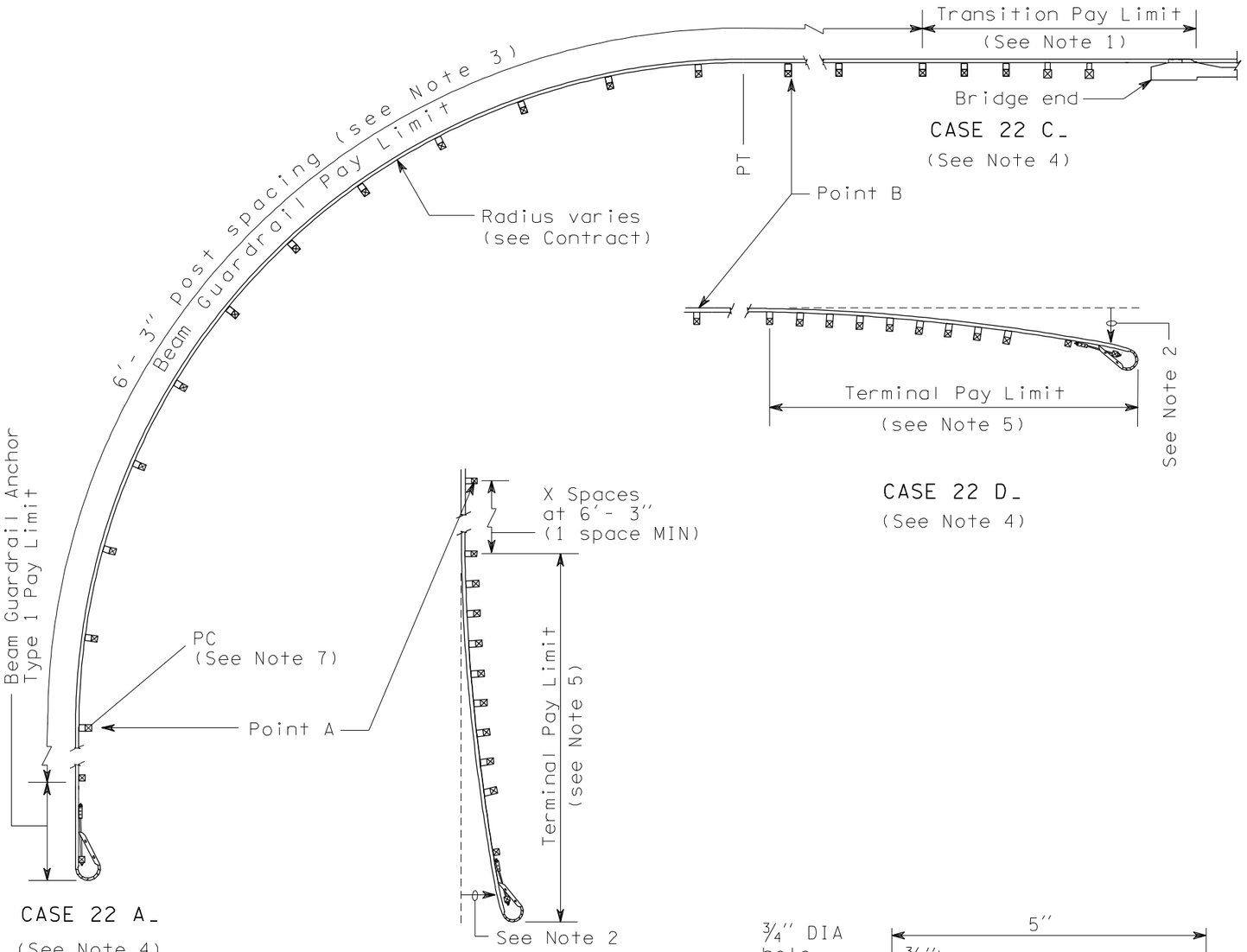

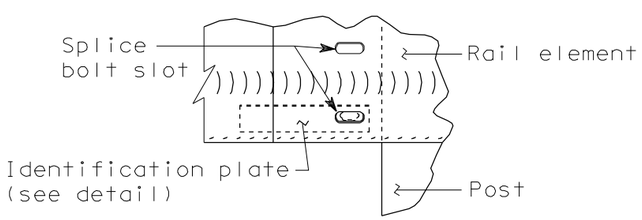

IDENTIFICATION PLATE MOUNTING DETAIL
(See Note 7)

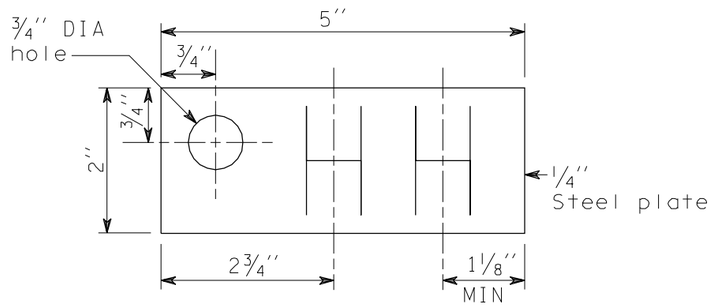

IDENTIFICATION PLATE DETAIL
(See Note 6)

NOTES
1. See Contract for transition and connection type.
2. The slope from the edge of the shoulder into the face of the guardrail should not be steeper than 10:1.
3. Guardrail installation shall be Beam Guardrail Type 1 with standard post and block.
4. First letter of case designation indicates end treatment on side road. Second letter indicates end treatment on main road. For instance a terminal on the side road and a bridge connection on the main road would be Case 22 BC.
5. For terminal type and details, see Contract and applicable Standard Plan(s).
6. Radius dimensions shall be etched into plate replacing the letters "HH" shown on the Identification Plate Detail. Digits shall be 1½" MIN height and ¾" MAX width. Plate shall be galvanized after etching.
7. The guardrail Identification Plate shall be mounted at the lower splice bolt on the back side of the rail element at the PC of the guardrail radius.

RICHARD BARSTOW ALBIN
STATE OF WASHINGTON
34042
REGISTERED
PROFESSIONAL ENGINEER

EXPIRES JULY 24, 2004

NOTE: THIS PLAN IS NOT A LEGAL ENGINEERING DOCUMENT BUT AN ELECTRONIC DUPLICATE. THE ORIGINAL, SIGNED BY THE ENGINEER AND APPROVED FOR PUBLICATION, IS KEPT ON FILE AT THE WASHINGTON STATE DEPARTMENT OF TRANSPORTATION. A COPY MAY BE OBTAINED UPON REQUEST.

GUARDRAIL PLACEMENT STRONG POST INTERSECTION DESIGN STANDARD PLAN C-2p

SHEET 1 OF 1 SHEET

APPROVED FOR PUBLICATION

Harold J. Peterfeso — STATE DESIGN ENGINEER — *10-31-03* DATE

Washington State Department of Transportation

DATE	REVISION	BY
09/2003	CORRECTED REFERENCES TO NOTES.	MHG

EFFECTIVE: APRIL 2, 2007 TO JANUARY 6, 2008

EFFECTIVE: APRIL 2, 2007 TO JANUARY 6, 2008
EFFECTIVE: APRIL 2, 2007 TO JANUARY 6, 2008

DRAWN BY: ADAM COCHRAN

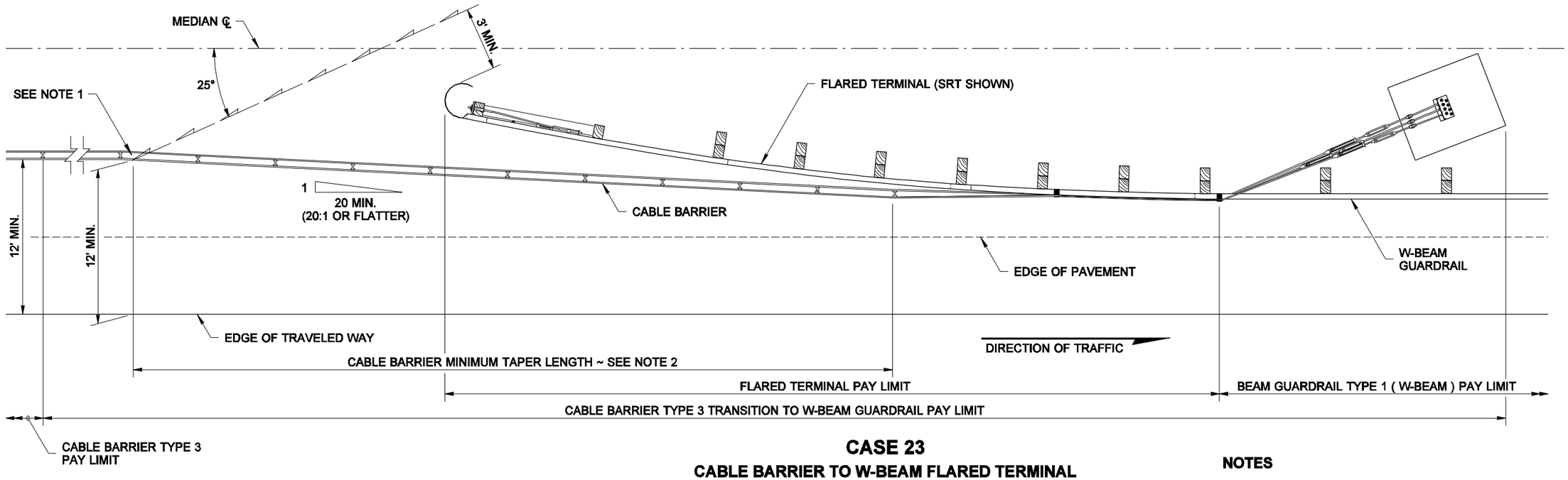

CASE 23
CABLE BARRIER TO W-BEAM FLARED TERMINAL

LEGEND

Design Layout Line

NOTES

1. The Design Layout Line shall intercept the Cable Barrier at a point that is at least 12 feet (perpendicular) from the opposite Edge of Traveled Way.
2. A 20:1 or flatter taper shall be used when adjusting the alignment of the Cable Barrier, and is required when the W-Beam Guardrail face is less than 12 feet from the Edge of Traveled Way.
3. For Cable Barrier Type 3 Transition to W-Beam Guardrail details, see Standard Plan C-3d.

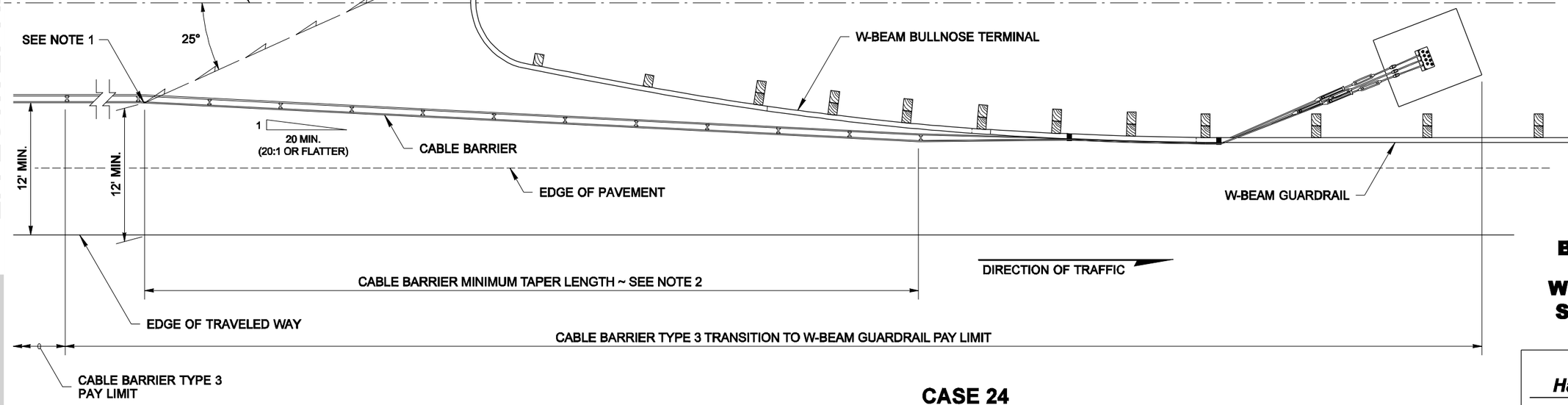

CASE 24
CABLE BARRIER TO W-BEAM BULL NOSE

RICHARD BARSTOW ALBIN
STATE OF WASHINGTON
34042
REGISTERED
PROFESSIONAL ENGINEER

EXPIRES JULY 24, 2006

NOTE: THIS PLAN IS NOT A LEGAL ENGINEERING DOCUMENT BUT AN ELECTRONIC DUPLICATE. THE ORIGINAL, SIGNED BY THE ENGINEER AND APPROVED FOR PUBLICATION, IS KEPT ON FILE AT THE WASHINGTON STATE DEPARTMENT OF TRANSPORTATION. A COPY MAY BE OBTAINED UPON REQUEST.

BARRIER PLACEMENT CABLE BARRIER TO W-BEAM CONNECTIONS STANDARD PLAN C-2q

SHEET 1 OF 1 SHEET

APPROVED FOR PUBLICATION

Harold J. Peterfeso — STATE DESIGN ENGINEER
03-03-05 — DATE

Washington State Department of Transportation

EFFECTIVE: APRIL 2, 2007 TO JANUARY 6, 2008
EFFECTIVE: APRIL 2, 2007 TO JANUARY 6, 2008

EFFECTIVE: APRIL 2, 2007 TO JANUARY 6, 2008

EFFECTIVE: APRIL 2, 2007 TO JANUARY 6, 2008

DRAWN BY: ADAM COCHRAN

NOTES

1. The Design Layout Line shall intercept the Cable Barrier at a point that is at least 12 feet (perpendicular) from the opposite Edge of Traveled Way.

2. A 20:1 or flatter taper shall be used when adjusting the alignment of the Cable Barrier, and is required when the W-Beam Guardrail face is less than 12 feet from the Edge of Traveled Way.

LEGEND

Design Layout Line

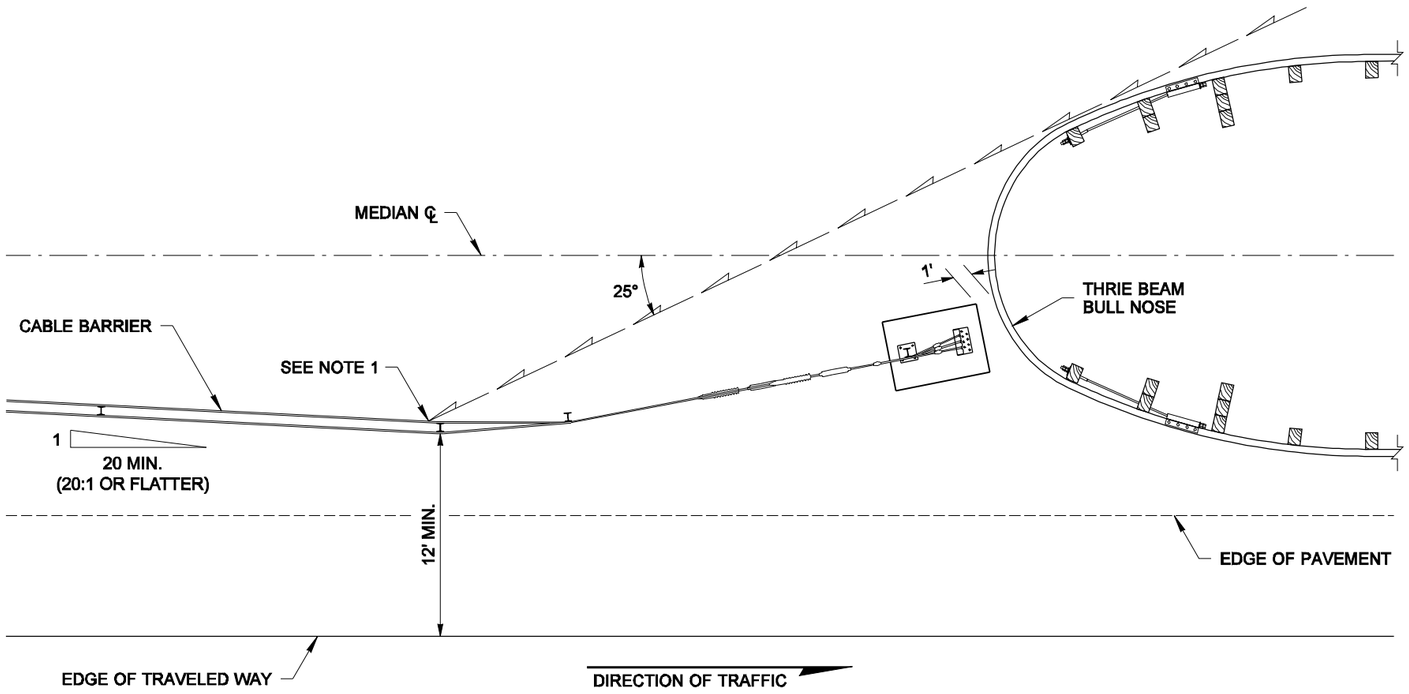

CASE 25

RICHARD BARSTOW ALBIN
STATE OF WASHINGTON
34042
REGISTERED
PROFESSIONAL ENGINEER

EXPIRES JULY 24, 2006

NOTE: THIS PLAN IS NOT A LEGAL ENGINEERING DOCUMENT BUT AN ELECTRONIC DUPLICATE. THE ORIGINAL, SIGNED BY THE ENGINEER AND APPROVED FOR PUBLICATION, IS KEPT ON FILE AT THE WASHINGTON STATE DEPARTMENT OF TRANSPORTATION. A COPY MAY BE OBTAINED UPON REQUEST.

BARRIER PLACEMENT CABLE TO THRIE BEAM BULL NOSE CONNECTION STANDARD PLAN C-2r

SHEET 1 OF 1 SHEET

APPROVED FOR PUBLICATION

Harold J. Peterfeso — STATE DESIGN ENGINEER

03-03-05 — DATE

Washington State Department of Transportation

EFFECTIVE: APRIL 2, 2007 TO JANUARY 6, 2008

EFFECTIVE: APRIL 2, 2007 TO JANUARY 6, 2008

EFFECTIVE: APRIL 2, 2007 TO JANUARY 6, 2008

EFFECTIVE: APRIL 2, 2007 TO JANUARY 6, 2008

DRAWN BY: BILL BERENS

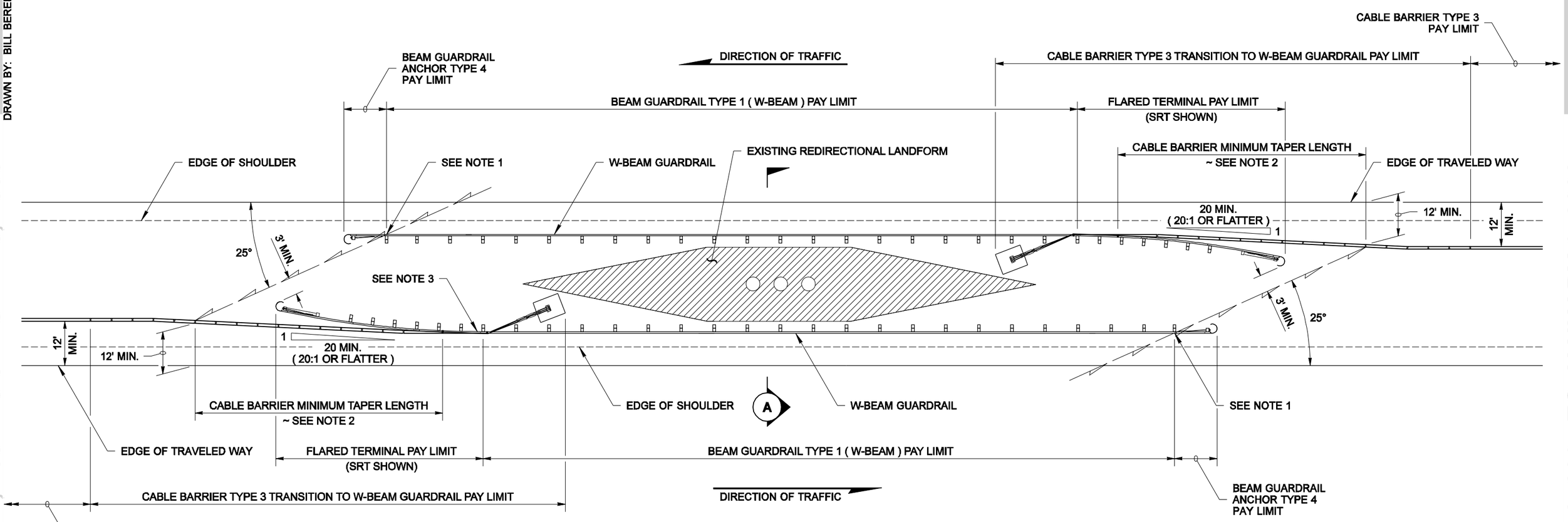

PLAN VIEW

CASE 26

NOTES

1. The Design Layout Line shall intercept the Cable Barrier at a point that is at least 12 feet (perpendicular) from the opposite Edge of Traveled Way.
2. A 20:1 or flatter taper shall be used when adjusting the alignment of the Cable Barrier, and is required when the W-Beam Guardrail face is less than 12 feet from the Edge of Traveled Way.
3. For Cable Barrier Type 3 Transition to W-Beam Guardrail details, see Standard Plan C-3d.

LEGEND

Design Layout Line

RICHARD BARSTOW ALBIN
STATE OF WASHINGTON
34042
REGISTERED
PROFESSIONAL ENGINEER

EXPIRES JULY 24, 2006

NOTE: THIS PLAN IS NOT A LEGAL ENGINEERING DOCUMENT BUT AN ELECTRONIC DUPLICATE. THE ORIGINAL, SIGNED BY THE ENGINEER AND APPROVED FOR PUBLICATION, IS KEPT ON FILE AT THE WASHINGTON STATE DEPARTMENT OF TRANSPORTATION. A COPY MAY BE OBTAINED UPON REQUEST.

BARRIER PLACEMENT ~ CABLE TO W-BEAM SHIELDING FOR REDIRECTIONAL LANDFORM

STANDARD PLAN C-2s

SHEET 1 OF 1 SHEET

APPROVED FOR PUBLICATION

Harold J. Peterfeso — STATE DESIGN ENGINEER

03-03-05 — DATE

Washington State Department of Transportation

EFFECTIVE: APRIL 2, 2007 TO JANUARY 6, 2008

EFFECTIVE: APRIL 2, 2007 TO JANUARY 6, 2008

EFFECTIVE: APRIL 2, 2007 TO JANUARY 6, 2008

EFFECTIVE: APRIL 2, 2007 TO JANUARY 6, 2008

EFFECTIVE: APRIL 2, 2007 TO JANUARY 6, 2008

EFFECTIVE: APRIL 2, 2007 TO JANUARY 6, 2008

DRAWN BY: MONIQUE GLICK

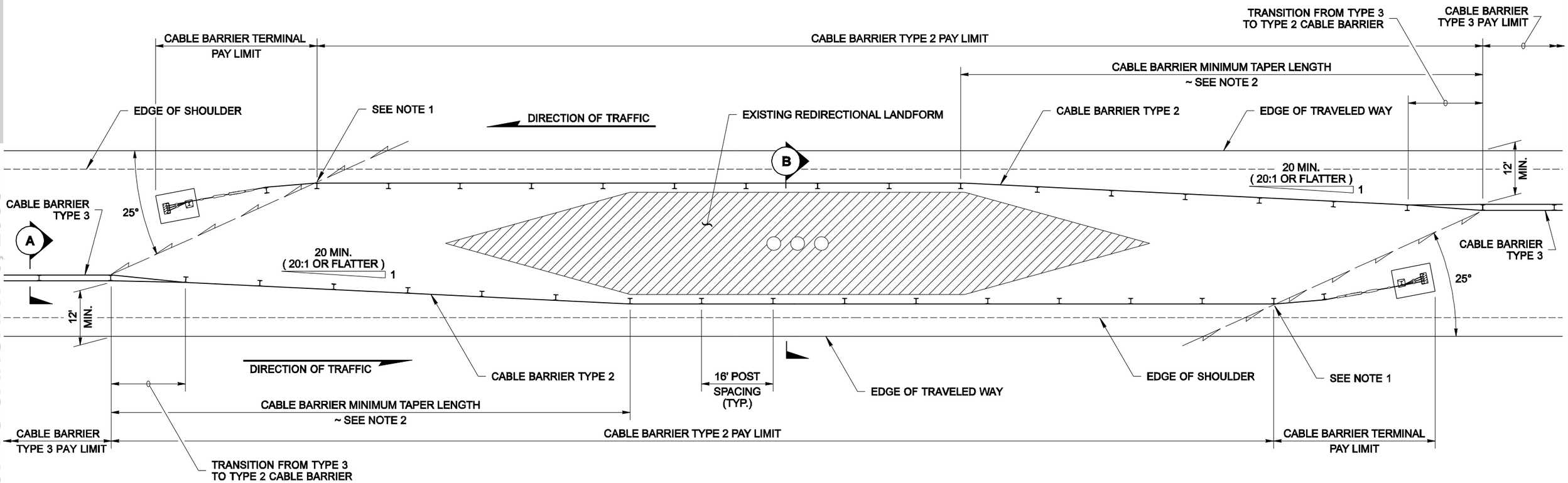

PLAN VIEW

CASE 27

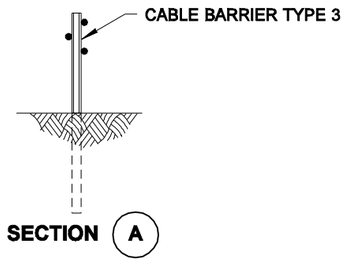

SECTION (A)

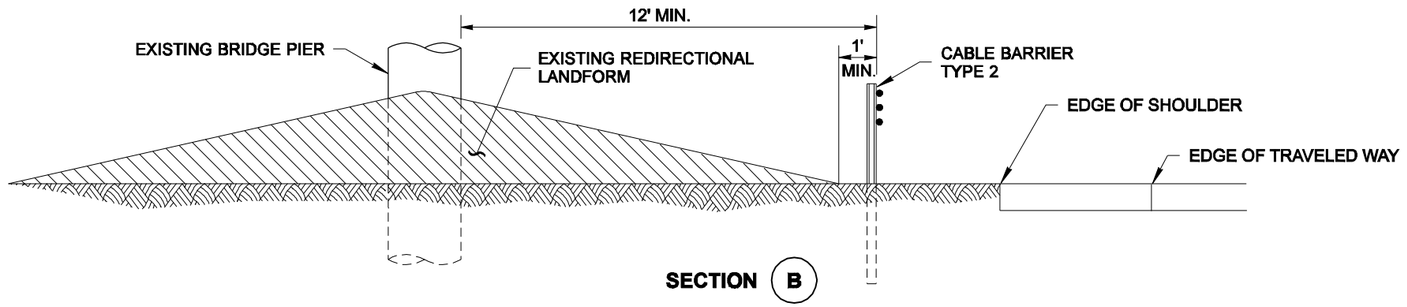

SECTION (B)

NOTES

1. Extend the Cable Barrier Type 2 until the Design Layout Line clears the opposing Cable Barrier Type 2 and intercepts the Cable Barrier Type 3 at a point that is at least 12 feet (perpendicular) from the opposite Edge of Traveled Way.

2. A 20:1 or flatter taper shall be used when adjusting the alignment of the Cable Barrier. A minimum taper is required, when the Cable Barrier Type 2 is less than 12 feet from the Edge of Traveled Way, before transitioning to Cable Barrier Type 3.

LEGEND

Design Layout Line

RICHARD BARSTOW ALBIN
STATE OF WASHINGTON
34042
REGISTERED
PROFESSIONAL ENGINEER

EXPIRES JULY 24, 2006

NOTE: THIS PLAN IS NOT A LEGAL ENGINEERING DOCUMENT BUT AN ELECTRONIC DUPLICATE. THE ORIGINAL, SIGNED BY THE ENGINEER AND APPROVED FOR PUBLICATION, IS KEPT ON FILE AT THE WASHINGTON STATE DEPARTMENT OF TRANSPORTATION. A COPY MAY BE OBTAINED UPON REQUEST.

BARRIER PLACEMENT ~ CABLE BARRIER SHIELDING FOR REDIRECTIONAL LANDFORM STANDARD PLAN C-2t

SHEET 1 OF 1 SHEET

APPROVED FOR PUBLICATION

Harold J. Peterfeso — STATE DESIGN ENGINEER

03-03-05 — DATE

Washington State Department of Transportation

EFFECTIVE: APRIL 2, 2007 TO JANUARY 6, 2008

EFFECTIVE: APRIL 2, 2007 TO JANUARY 6, 2008

EFFECTIVE: APRIL 2, 2007 TO JANUARY 6, 2008

DRAWN BY: MARK SUJKA

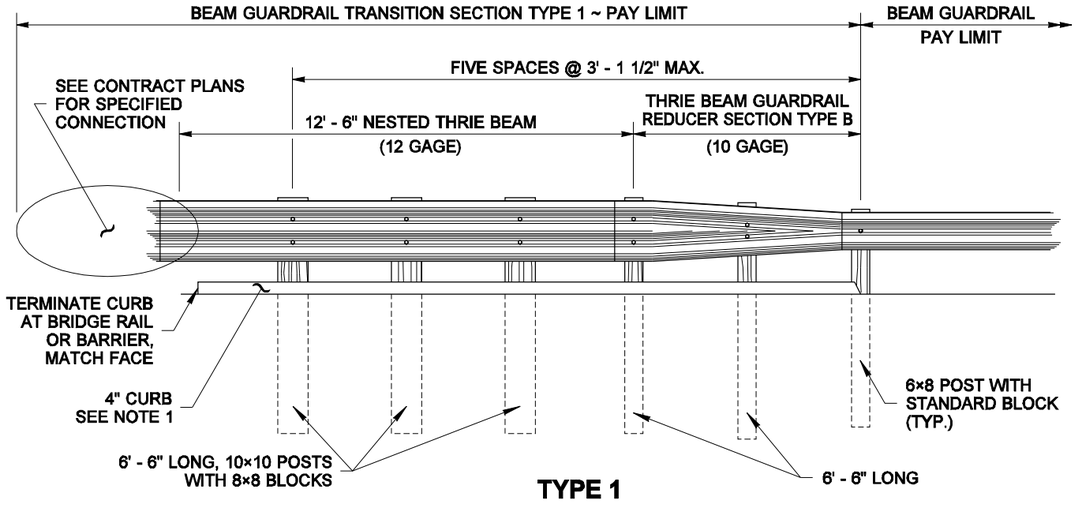

TYPE 1

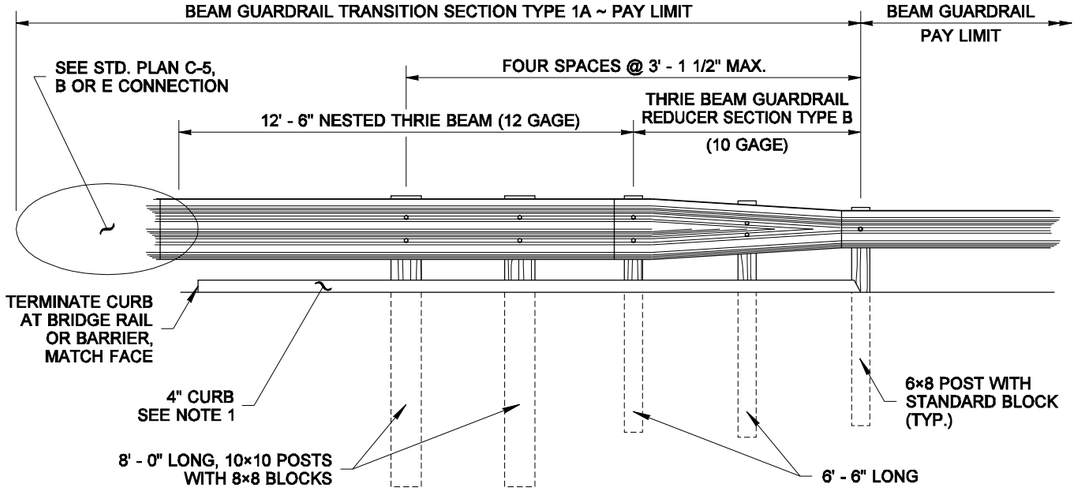

TYPE 1A

NOTE

1. Install a Type 2 Extruded Asphalt Concrete Curb (see Standard Plan F-2b) at face of Guardrail.

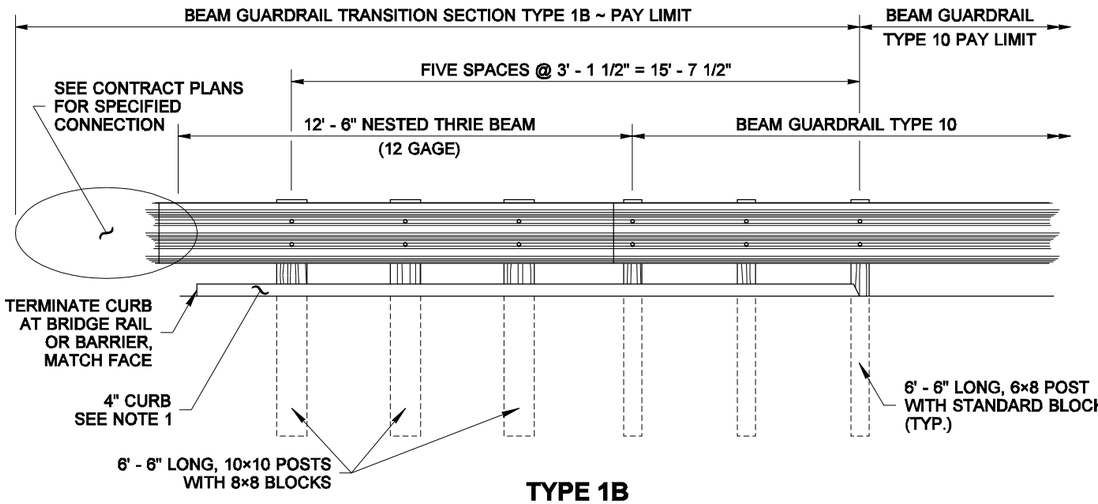

TYPE 1B

RICHARD BARSTOW ALBIN
STATE OF WASHINGTON
34042
REGISTERED
PROFESSIONAL ENGINEER

EXPIRES JULY 24, 2006

NOTE: THIS PLAN IS NOT A LEGAL ENGINEERING DOCUMENT BUT AN ELECTRONIC DUPLICATE. THE ORIGINAL, SIGNED BY THE ENGINEER AND APPROVED FOR PUBLICATION, IS KEPT ON FILE AT THE WASHINGTON STATE DEPARTMENT OF TRANSPORTATION. A COPY MAY BE OBTAINED UPON REQUEST.

BEAM GUARDRAIL TRANSITION SECTIONS

STANDARD PLAN C-3

SHEET 1 OF 1 SHEET

APPROVED FOR PUBLICATION

Harold J. Peterfeso — STATE DESIGN ENGINEER

10-04-05 — DATE

Washington State Department of Transportation

EFFECTIVE: APRIL 2, 2007 TO JANUARY 6, 2008

EFFECTIVE: APRIL 2, 2007 TO JANUARY 6, 2008

DRAWN BY: MARK SUJKA

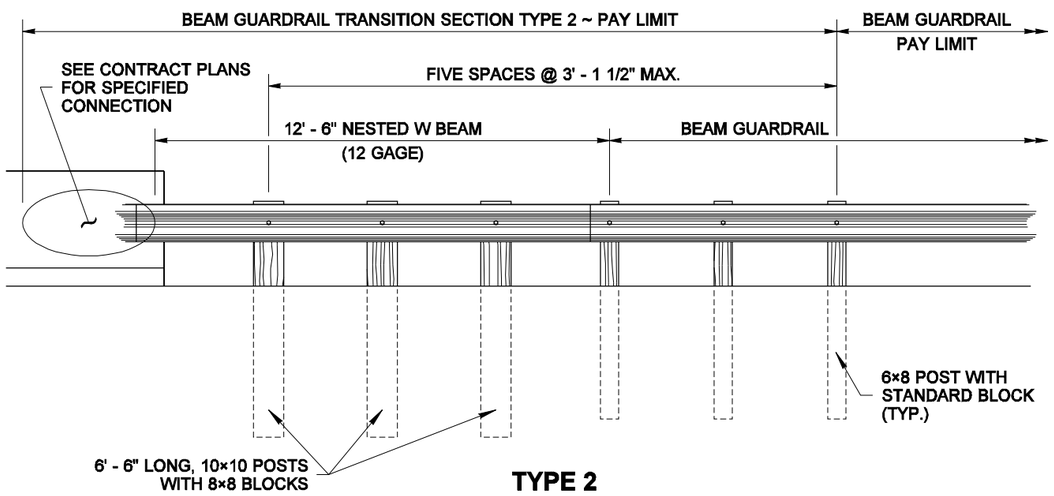

TYPE 2

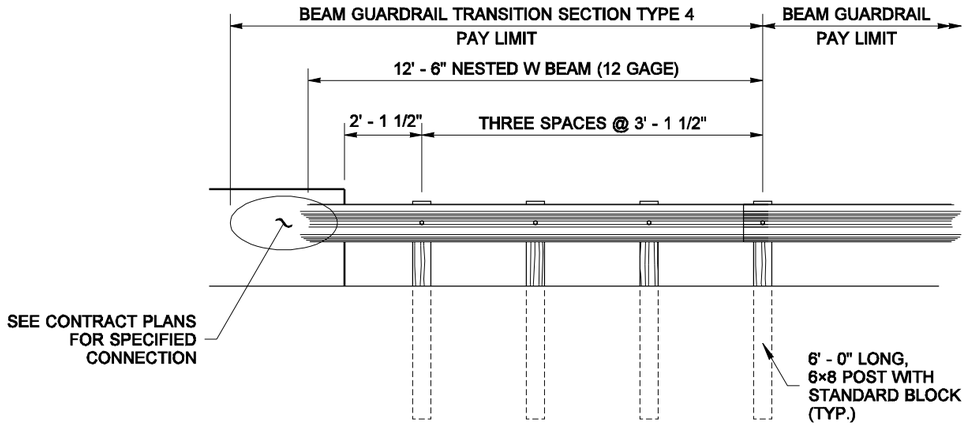

TYPE 4
FOR 45 MPH AND BELOW

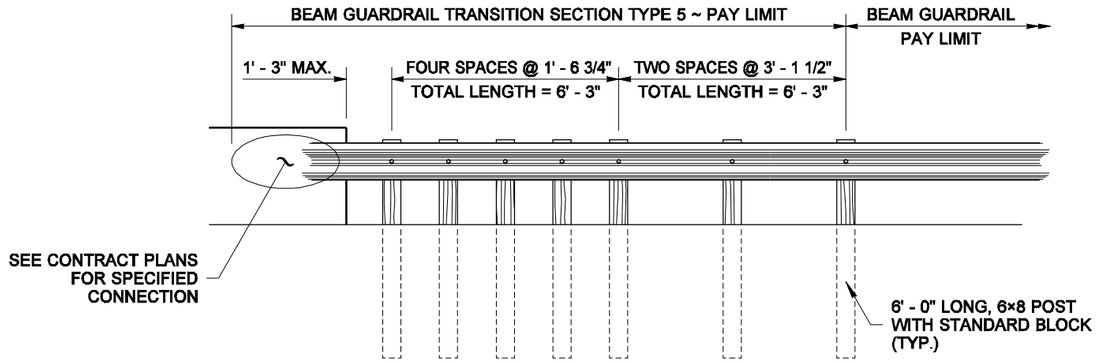

TYPE 5

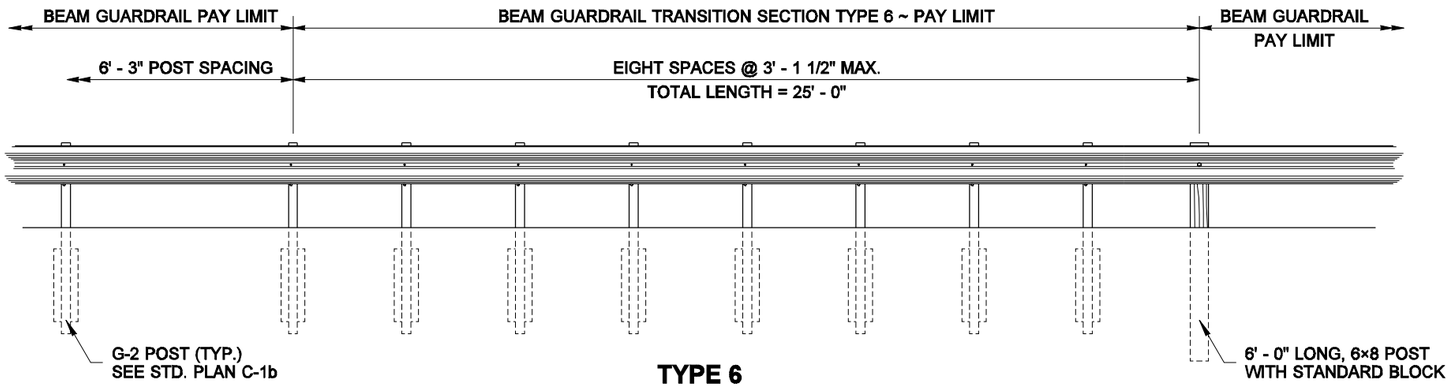

TYPE 6

RICHARD BARSTOW ALBIN
STATE OF WASHINGTON
34042
REGISTERED
PROFESSIONAL ENGINEER

EXPIRES JULY 24, 2006

NOTE: THIS PLAN IS NOT A LEGAL ENGINEERING DOCUMENT BUT AN ELECTRONIC DUPLICATE. THE ORIGINAL, SIGNED BY THE ENGINEER AND APPROVED FOR PUBLICATION, IS KEPT ON FILE AT THE WASHINGTON STATE DEPARTMENT OF TRANSPORTATION. A COPY MAY BE OBTAINED UPON REQUEST.

BEAM GUARDRAIL TRANSITION SECTIONS

STANDARD PLAN C-3a

SHEET 1 OF 1 SHEET

APPROVED FOR PUBLICATION

Harold J. Peterfeso — STATE DESIGN ENGINEER

10-04-05 — DATE

Washington State Department of Transportation

EFFECTIVE: APRIL 2, 2007 TO JANUARY 6, 2008

EFFECTIVE: APRIL 2, 2007 TO JANUARY 6, 2008

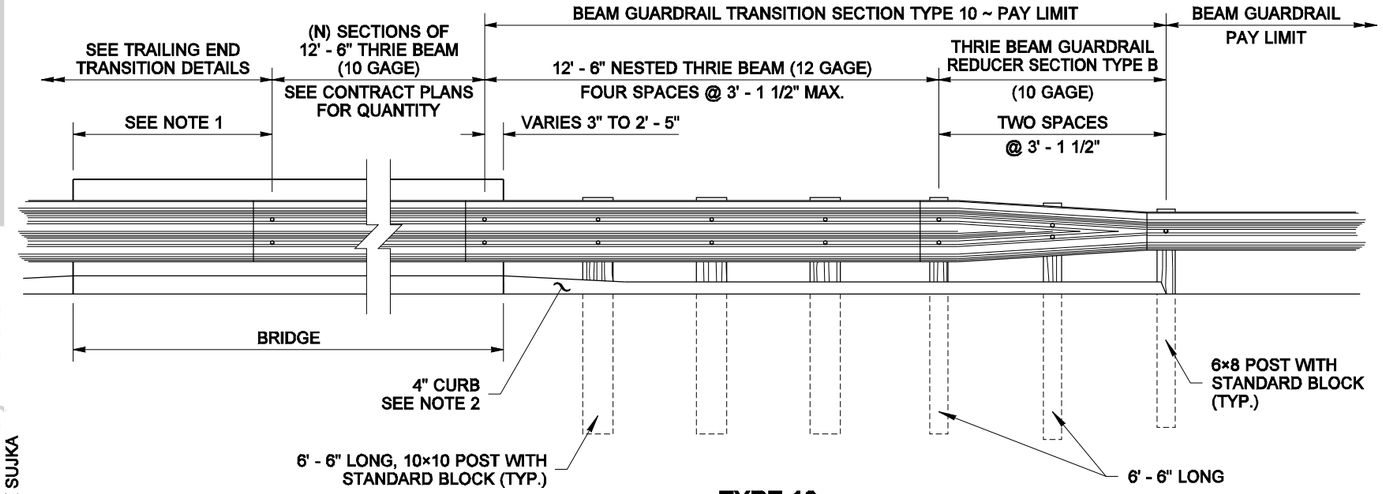

TYPE 10

APPROACH END

THRIE BEAM INSTALLED AT FACE OF BRIDGE CURB

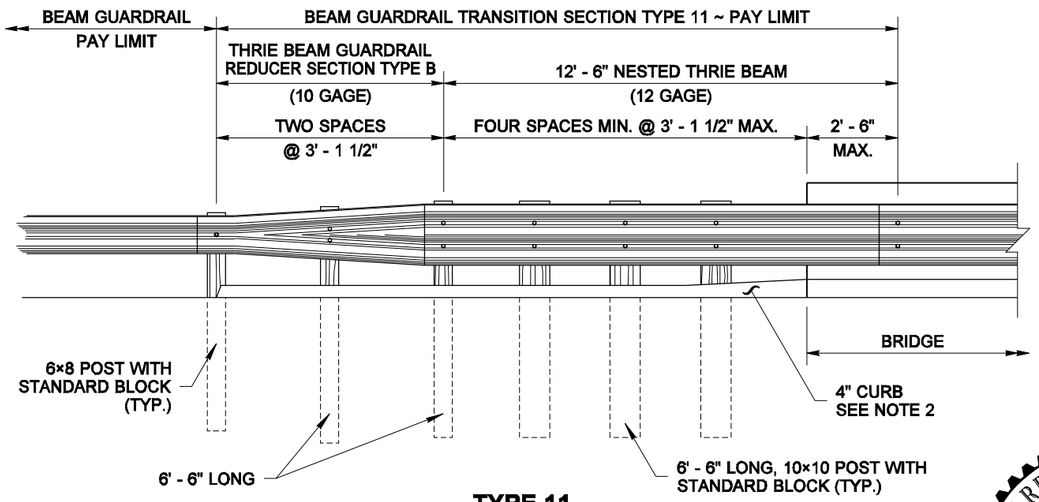

TYPE 11

TRAILING END

THRIE BEAM INSTALLED AT FACE OF BRIDGE CURB

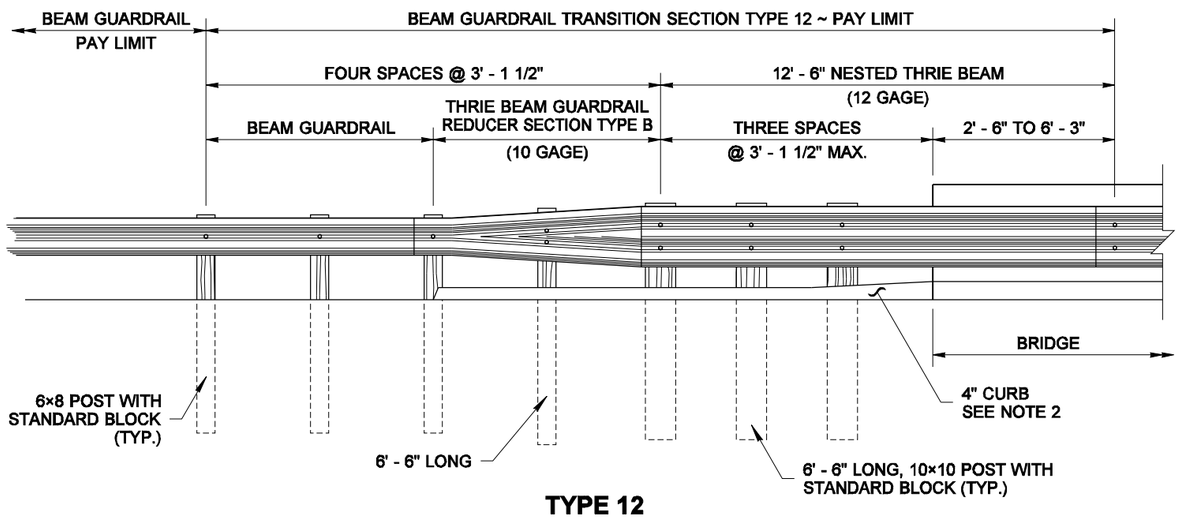

TYPE 12

TRAILING END

THRIE BEAM INSTALLED AT FACE OF BRIDGE CURB

NOTES

1. If the distance from the end of the bridge to the end of the thrie beam bridge rail section exceeds 6' - 3" using 12' - 6" thrie beam sections, add a 6' - 3" section of thrie beam bridge rail to reduce the length to less than 6' - 3".

2. When thrie beam is installed at the face of the bridge curb, install a Type 2 Extruded Asphalt Concrete Curb (see Standard Plan F-2b) at face of Guardrail. Match the height of existing bridge curb with a 20:1 transition.

3. When thrie beam is installed at the face of rigid bridge rail, an HMA ramp is required from the roadway surface to the top of the bridge curb or sidewalk. The slope of the ramp shall be 20:1 or flatter.



NOTE: THIS PLAN IS NOT A LEGAL ENGINEERING DOCUMENT BUT AN ELECTRONIC DUPLICATE. THE ORIGINAL, SIGNED BY THE ENGINEER AND APPROVED FOR PUBLICATION, IS KEPT ON FILE AT THE WASHINGTON STATE DEPARTMENT OF TRANSPORTATION. A COPY MAY BE OBTAINED UPON REQUEST.

BEAM GUARDRAIL TRANSITION SECTIONS

STANDARD PLAN C-3b

SHEET 1 OF 2 SHEETS

APPROVED FOR PUBLICATION

Harold J. Peterfeso — STATE DESIGN ENGINEER

10-04-05 — DATE

Washington State Department of Transportation

DRAWN BY: MARK SUJKA

EFFECTIVE: APRIL 2, 2007 TO JANUARY 6, 2008

EFFECTIVE: APRIL 2, 2007 TO JANUARY 6, 2008

EFFECTIVE: APRIL 2, 2007 TO JANUARY 6, 2008

DRAWN BY: MARK SUJKA

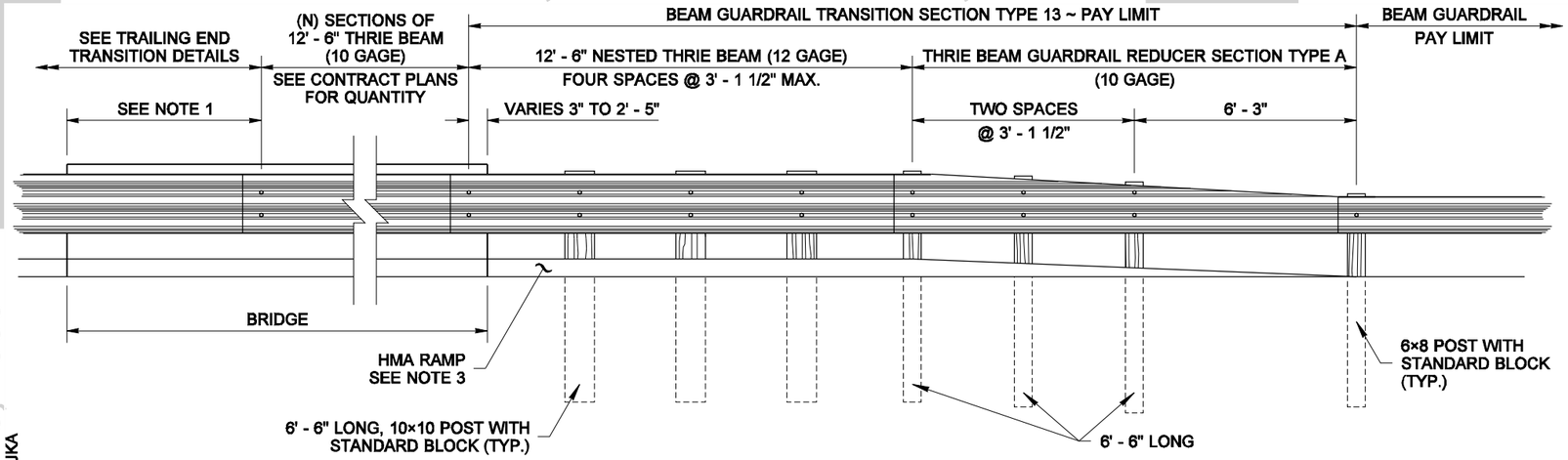

TYPE 13

APPROACH END

THRIE BEAM INSTALLED AT FACE OF BRIDGE RAIL

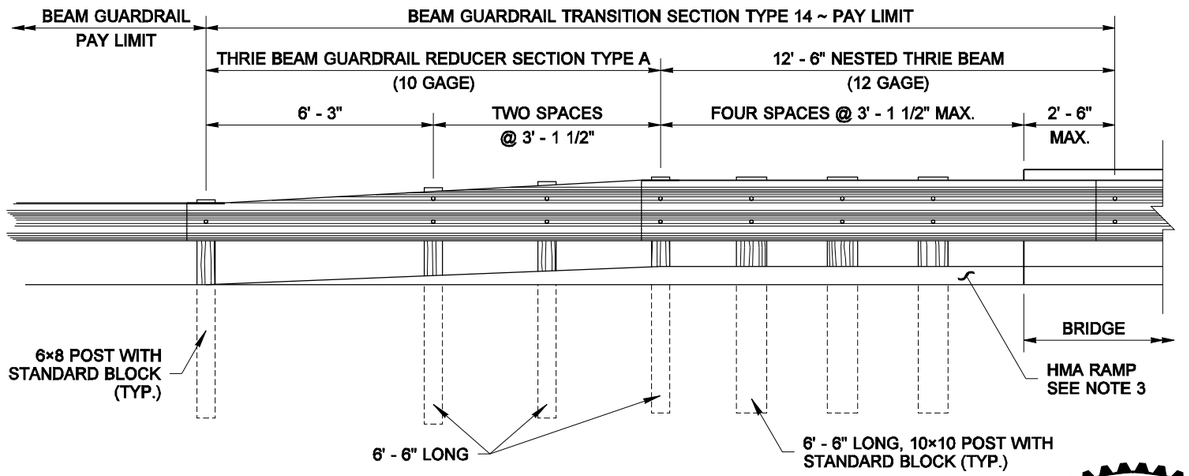

TYPE 14

TRAILING END

THRIE BEAM INSTALLED AT FACE OF BRIDGE RAIL

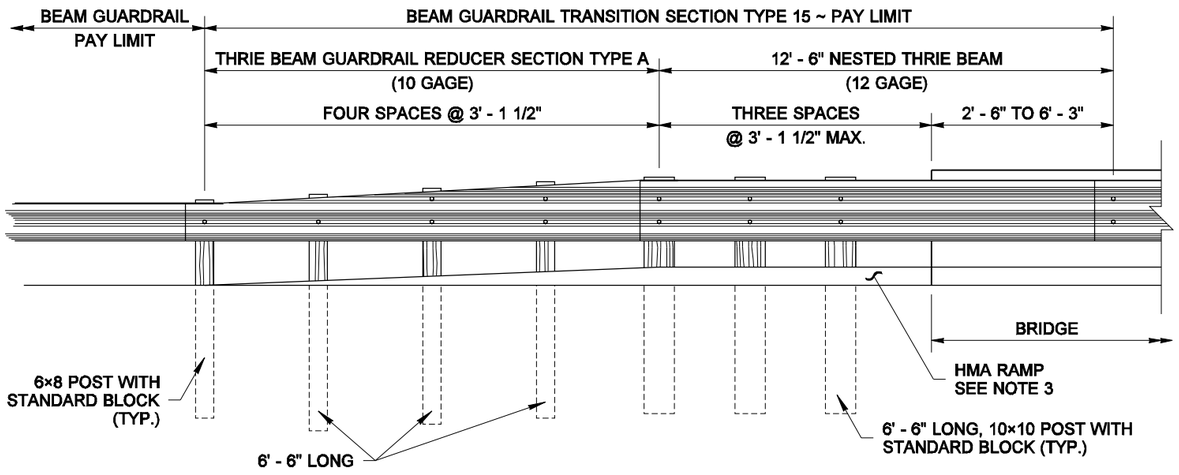

TYPE 15

TRAILING END

THRIE BEAM INSTALLED AT FACE OF BRIDGE RAIL



EXPIRES JULY 24, 2006

NOTE: THIS PLAN IS NOT A LEGAL ENGINEERING DOCUMENT BUT AN ELECTRONIC DUPLICATE. THE ORIGINAL, SIGNED BY THE ENGINEER AND APPROVED FOR PUBLICATION, IS KEPT ON FILE AT THE WASHINGTON STATE DEPARTMENT OF TRANSPORTATION. A COPY MAY BE OBTAINED UPON REQUEST.

BEAM GUARDRAIL TRANSITION SECTIONS

STANDARD PLAN C-3b

SHEET 2 OF 2 SHEETS

APPROVED FOR PUBLICATION

Harold J. Peterfeso — STATE DESIGN ENGINEER

10-04-05 — DATE

Washington State Department of Transportation

EFFECTIVE: APRIL 2, 2007 TO JANUARY 6, 2008

EFFECTIVE: APRIL 2, 2007 TO JANUARY 6, 2008

EFFECTIVE: APRIL 2, 2007 TO JANUARY 6, 2008

EFFECTIVE: APRIL 2, 2007 TO JANUARY 6, 2008

DRAWN BY: MARK SUJKA

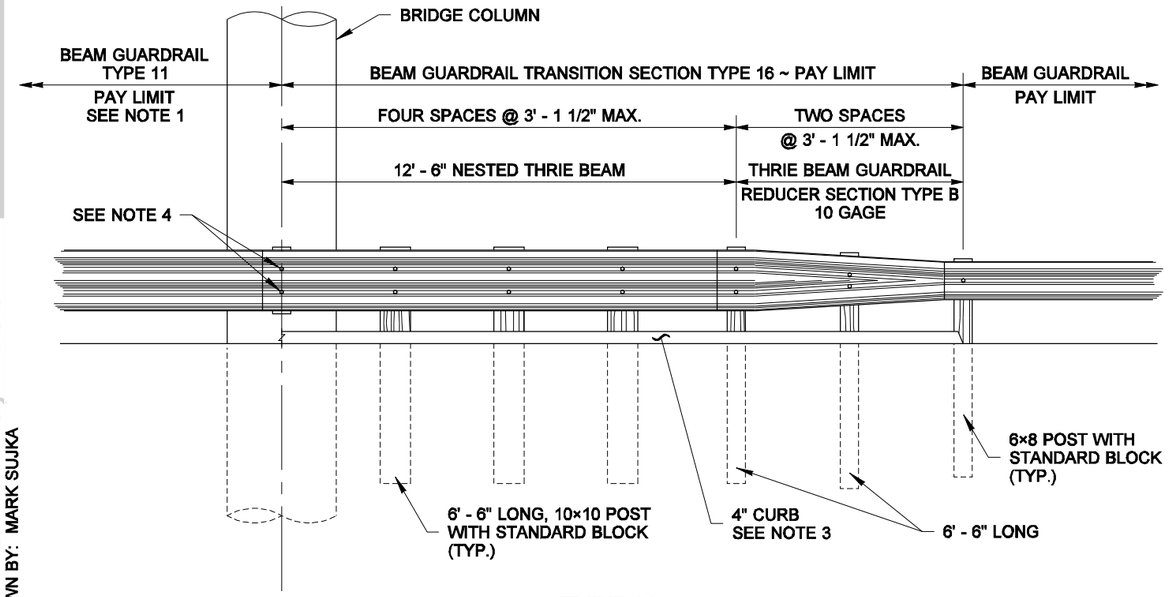

TYPE 16
APPROACH END

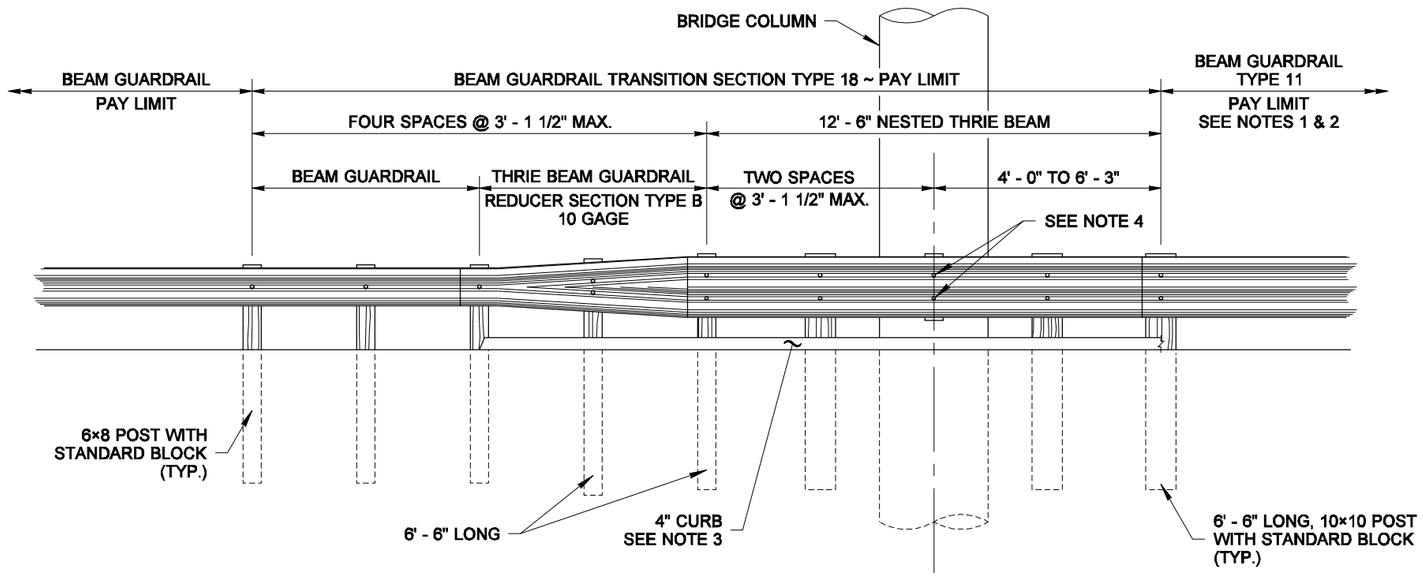

TYPE 18
TRAILING END

NOTES

1. See Contract for the number of thrie beam sections for Beam Guardrail Type 11.
2. If the distance from the end of the Beam Guardrail Type 11 to the column/structure exceeds 6' - 3" using 12' - 6" thrie beam sections, add a 6' - 3" nested section of thrie beam to reduce the distance to less than 6' - 3".
3. Install a Type 2 Extruded Asphalt Concrete Curb (see Standard Plan F-2b) at face of Guardrail.
4. Attach the standard block to the rail using two 5/8" × 4" lag bolts.

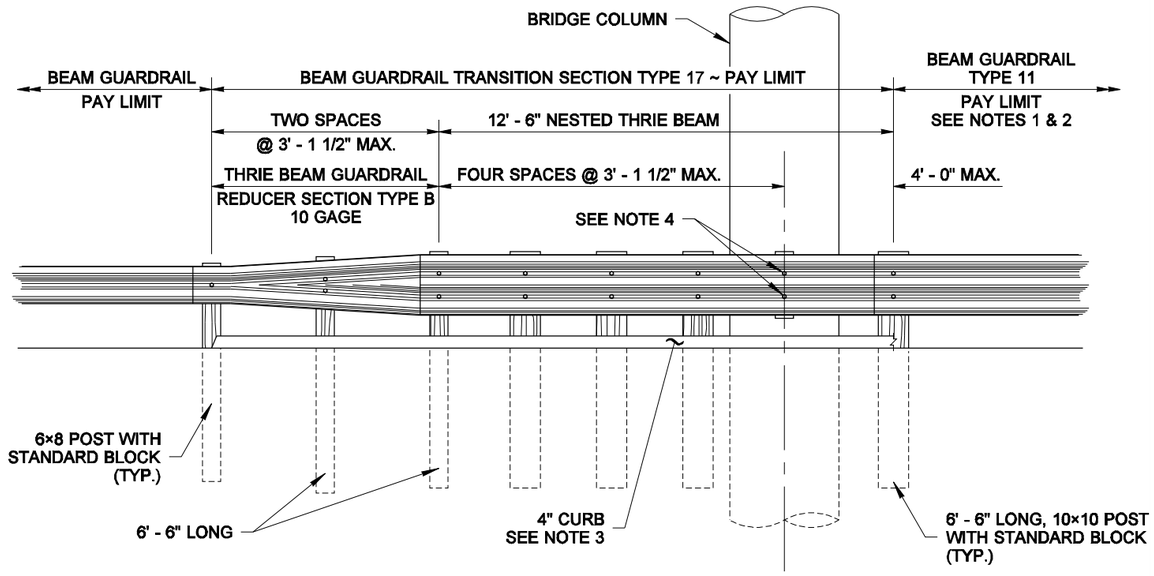

TYPE 17
TRAILING END

RICHARD BARSTOW ALBIN
STATE OF WASHINGTON
34042
REGISTERED
PROFESSIONAL ENGINEER

EXPIRES JULY 24, 2006

NOTE: THIS PLAN IS NOT A LEGAL ENGINEERING DOCUMENT BUT AN ELECTRONIC DUPLICATE. THE ORIGINAL, SIGNED BY THE ENGINEER AND APPROVED FOR PUBLICATION, IS KEPT ON FILE AT THE WASHINGTON STATE DEPARTMENT OF TRANSPORTATION. A COPY MAY BE OBTAINED UPON REQUEST.

BEAM GUARDRAIL TRANSITION SECTIONS

STANDARD PLAN C-3c

SHEET 1 OF 1 SHEET

APPROVED FOR PUBLICATION

Harold J. Peterfeso — STATE DESIGN ENGINEER — *06-21-06* — DATE

Washington State Department of Transportation

DATE	REVISION	BY
05/2006	OMITTED ATTACHMENT TO STRUCTURE	EAB

EFFECTIVE: APRIL 2, 2007 TO JANUARY 6, 2008

EFFECTIVE: APRIL 2, 2007 TO JANUARY 6, 2008

EFFECTIVE: APRIL 2, 2007 TO JANUARY 6, 2008

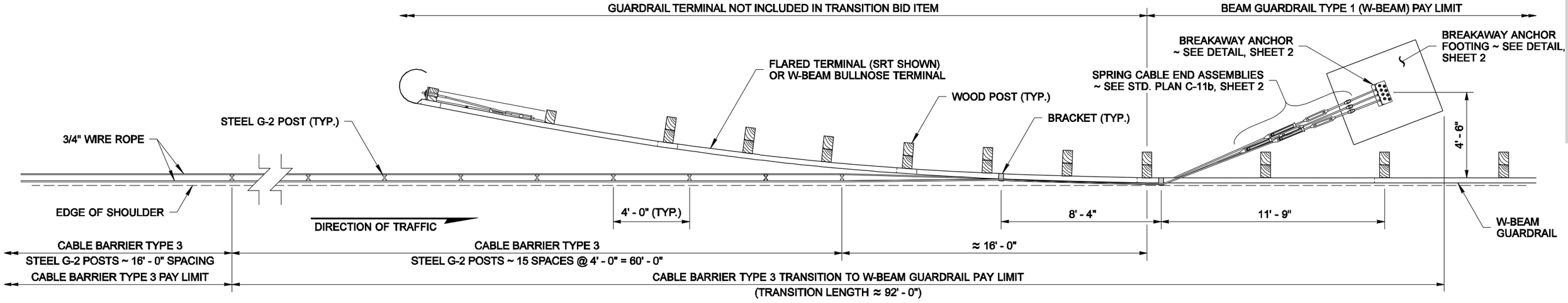

PLAN VIEW

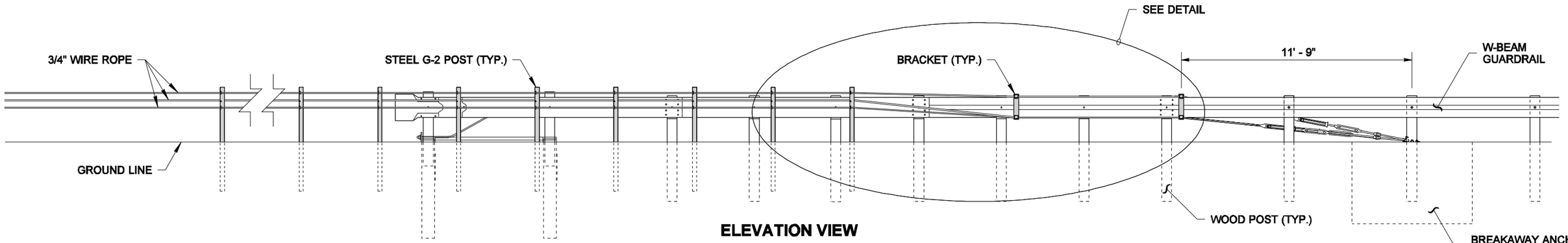

ELEVATION VIEW

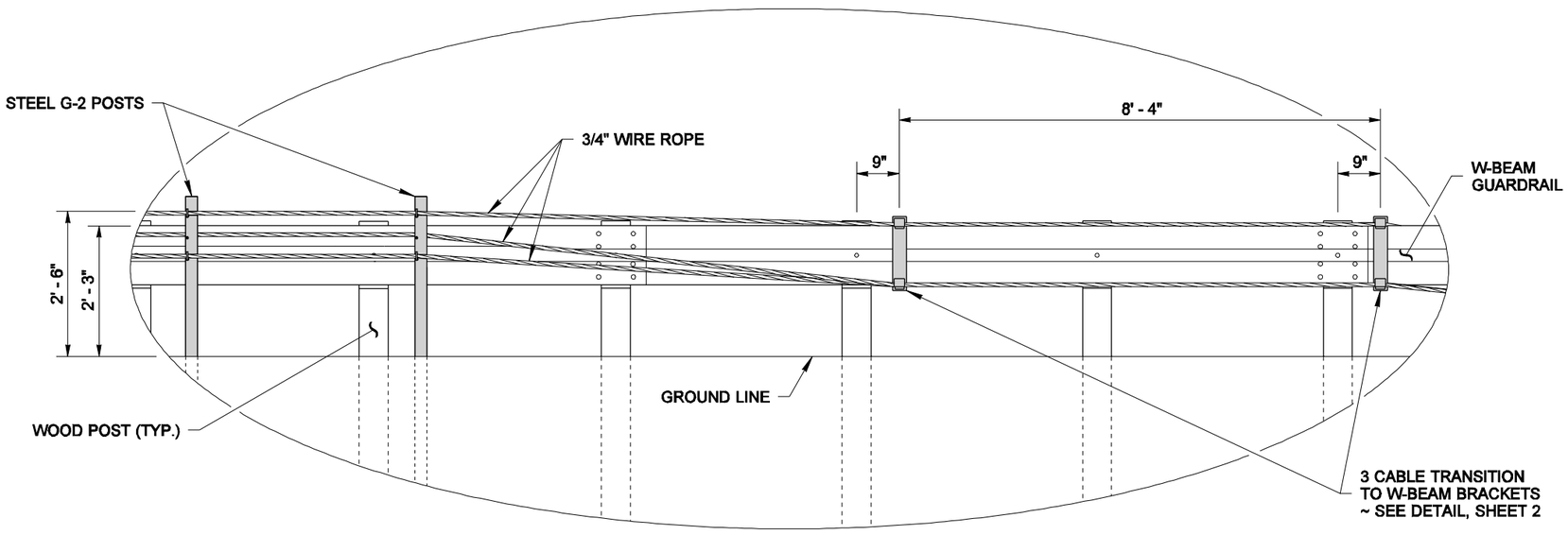

DETAIL

DRAWN BY: MONIQUE GLICK

RICHARD BARSTOW ALBIN
STATE OF WASHINGTON
34042
REGISTERED
PROFESSIONAL ENGINEER

EXPIRES JULY 24, 2006

NOTE: THIS PLAN IS NOT A LEGAL ENGINEERING DOCUMENT BUT AN ELECTRONIC DUPLICATE. THE ORIGINAL, SIGNED BY THE ENGINEER AND APPROVED FOR PUBLICATION, IS KEPT ON FILE AT THE WASHINGTON STATE DEPARTMENT OF TRANSPORTATION. A COPY MAY BE OBTAINED UPON REQUEST.

CABLE BARRIER TYPE 3 TRANSITION TO W-BEAM GUARDRAIL STANDARD PLAN C-3d

SHEET 1 OF 2 SHEETS

APPROVED FOR PUBLICATION

Harold J. Peterfeso — STATE DESIGN ENGINEER

03-03-05 — DATE

Washington State Department of Transportation

EFFECTIVE: APRIL 2, 2007 TO JANUARY 6, 2008

EFFECTIVE: APRIL 2, 2007 TO JANUARY 6, 2008

EFFECTIVE: APRIL 2, 2007 TO JANUARY 6, 2008

DRAWN BY: MONIQUE GLICK

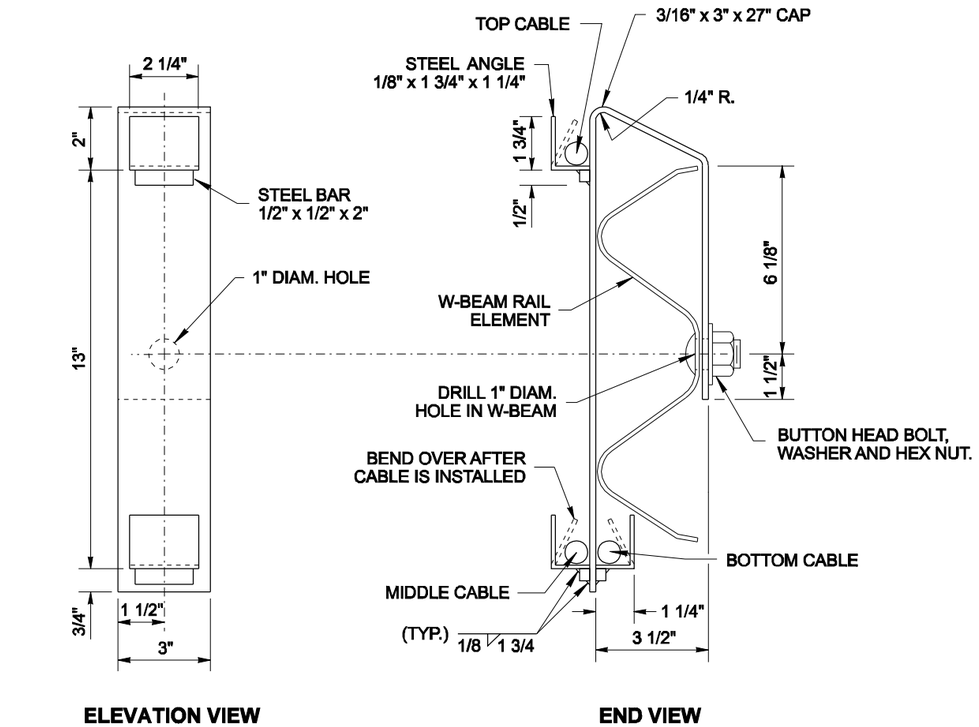

ELEVATION VIEW **END VIEW**

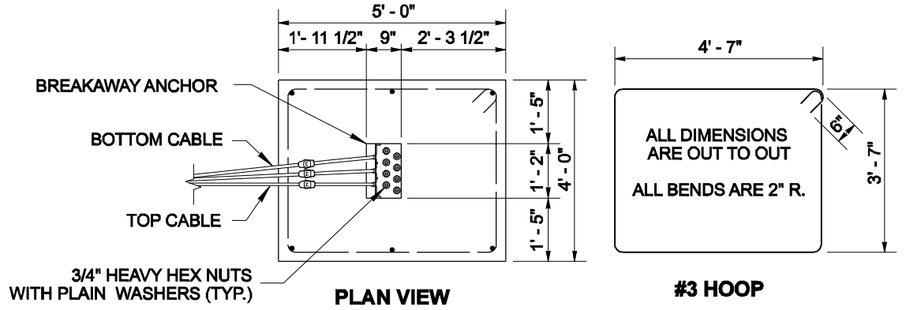

PLAN VIEW **#3 HOOP**

DIRECTION OF TRAFFIC

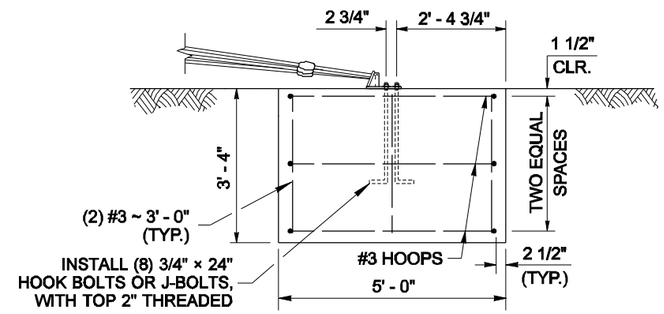

ELEVATION VIEW

BREAKAWAY ANCHOR FOOTING DETAIL

STEEL USED IN THE FABRICATION OF THE BRACKET SHALL CONFORM TO ASTM A 36 AND THE BRACKET SHALL BE GALVANIZED AFTER FABRICATION IN ACCORDANCE WITH ASTM A 123.

3 CABLE TRANSITION TO W-BEAM BRACKET DETAIL

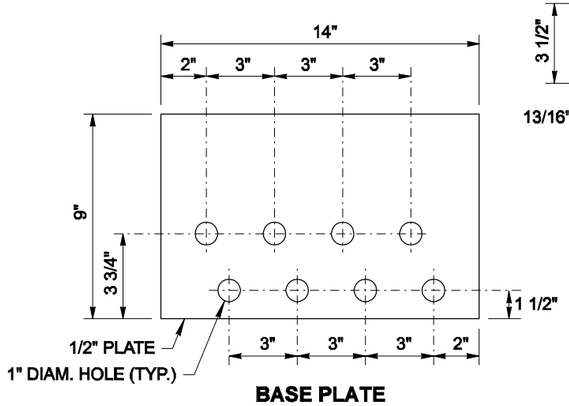

BASE PLATE

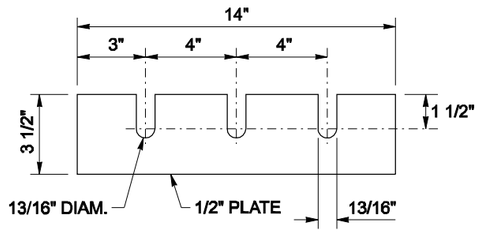

THRUST PLATE

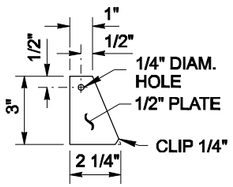

END GUSSET

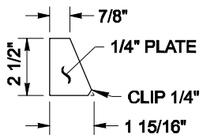

INSIDE GUSSET

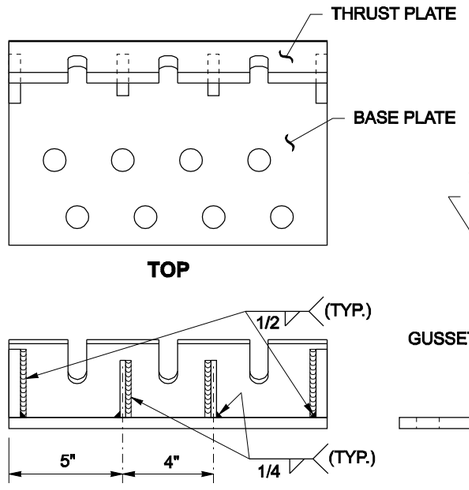

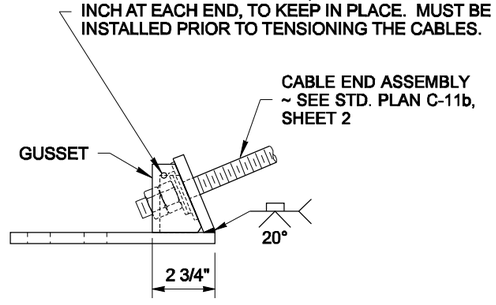

SIDE

BREAKAWAY ANCHOR DETAIL

RICHARD BARSTOW ALBIN
STATE OF WASHINGTON
34042
REGISTERED
PROFESSIONAL ENGINEER

EXPIRES JULY 24, 2006

NOTE: THIS PLAN IS NOT A LEGAL ENGINEERING DOCUMENT BUT AN ELECTRONIC DUPLICATE. THE ORIGINAL, SIGNED BY THE ENGINEER AND APPROVED FOR PUBLICATION, IS KEPT ON FILE AT THE WASHINGTON STATE DEPARTMENT OF TRANSPORTATION. A COPY MAY BE OBTAINED UPON REQUEST.

CABLE BARRIER TYPE 3 TRANSITION TO W-BEAM GUARDRAIL STANDARD PLAN C-3d

SHEET 2 OF 2 SHEETS

APPROVED FOR PUBLICATION

Harold J. Peterfeso — STATE DESIGN ENGINEER — *03-03-05* — DATE

Washington State Department of Transportation

EFFECTIVE: APRIL 2, 2007 TO JANUARY 6, 2008

EFFECTIVE: APRIL 2, 2007 TO JANUARY 6, 2008

DRAWN BY: MARK SUJKA

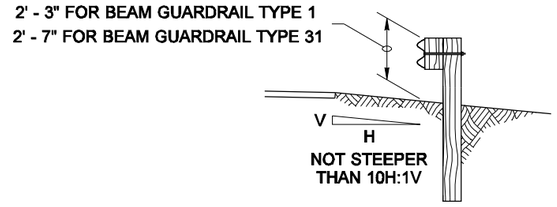

SECTION (A)

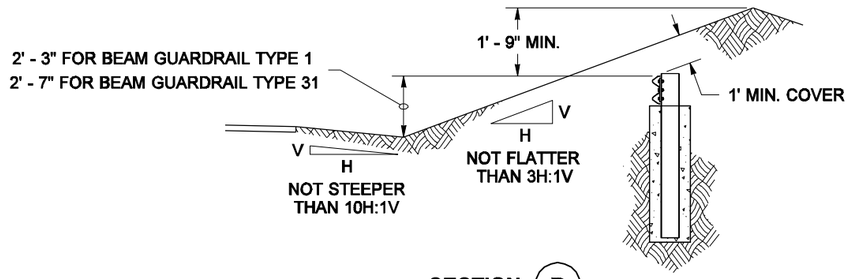

SECTION (B)



PERSPECTIVE

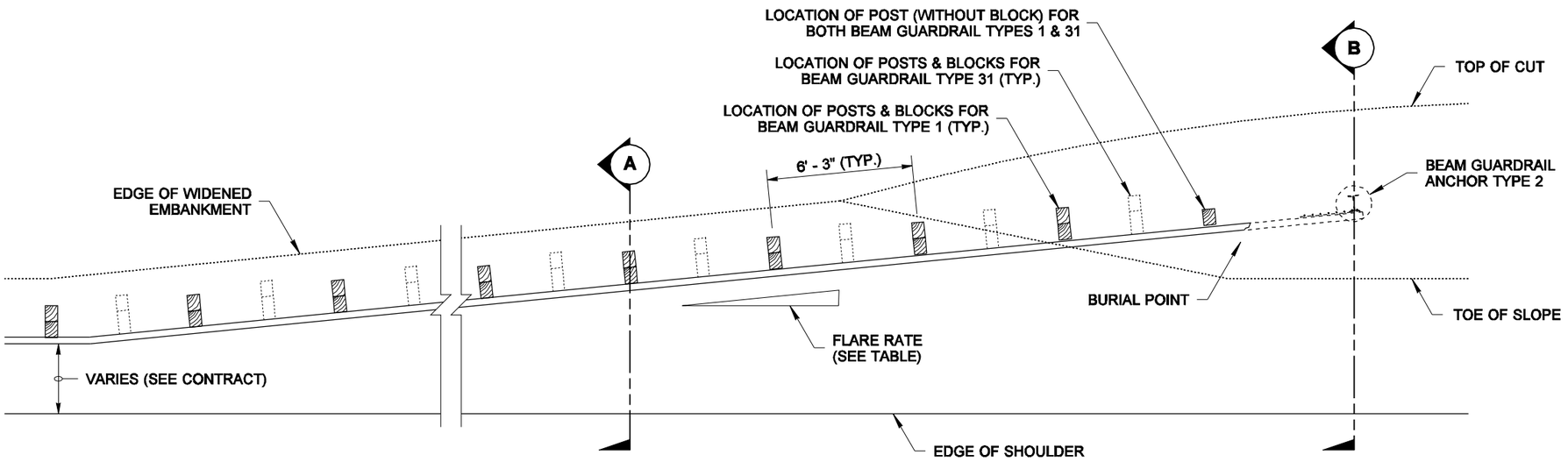

PLAN

FLARE RATE TABLE	
RATE	POSTED SPEED (mph)
15 : 1	70
14 : 1	60
12 : 1	55
11 : 1	50
10 : 1	45
9 : 1	40 or less

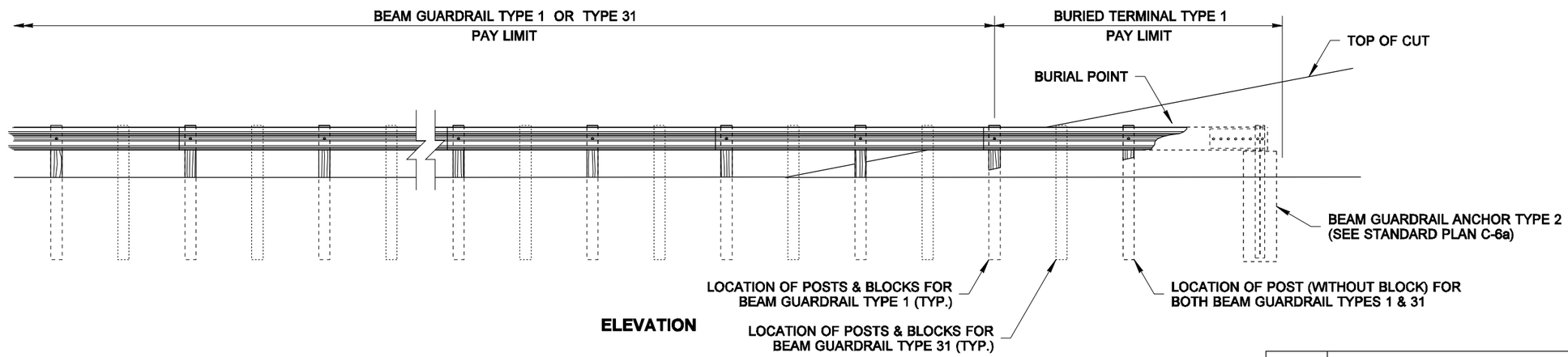

ELEVATION

RICHARD BARSTOW ALBIN
STATE OF WASHINGTON
34042
REGISTERED
PROFESSIONAL ENGINEER

EXPIRES JULY 24, 2008

NOTE: THIS PLAN IS NOT A LEGAL ENGINEERING DOCUMENT BUT AN ELECTRONIC DUPLICATE. THE ORIGINAL, SIGNED BY THE ENGINEER AND APPROVED FOR PUBLICATION, IS KEPT ON FILE AT THE WASHINGTON STATE DEPARTMENT OF TRANSPORTATION. A COPY MAY BE OBTAINED UPON REQUEST.

BEAM GUARDRAIL BURIED TERMINAL TYPE 1

STANDARD PLAN C-4

SHEET 1 OF 1 SHEET

APPROVED FOR PUBLICATION

Ken L. Smith — STATE DESIGN ENGINEER — *02-21-07* — DATE

Washington State Department of Transportation

DATE	REVISION	BY
11/2006	REVISED TO INCLUDE 31" TALL GUARDRAIL	MAS

EFFECTIVE: APRIL 2, 2007 TO JANUARY 6, 2008

EFFECTIVE: APRIL 2, 2007 TO JANUARY 6, 2008

EFFECTIVE: APRIL 2, 2007 TO JANUARY 6, 2008

EFFECTIVE: APRIL 2, 2007 TO JANUARY 6, 2008
DRAWN BY: MARK SUJKA

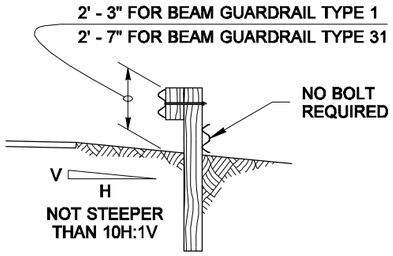

SECTION (A)

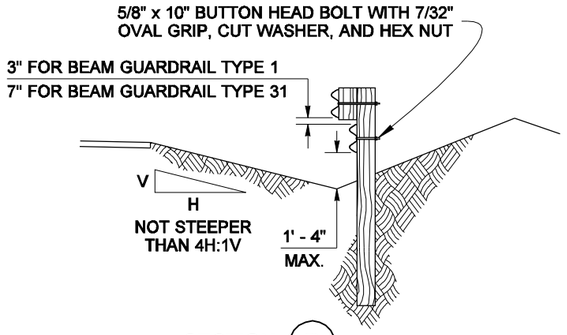

SECTION (B)

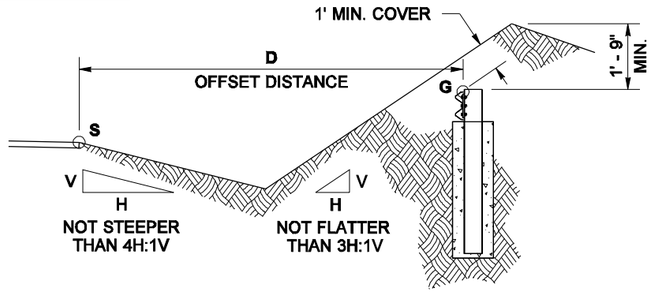

SEE NOTE 3

SECTION (C)

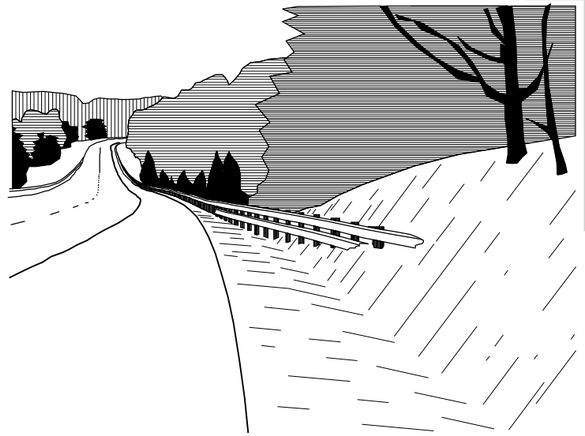

PERSPECTIVE

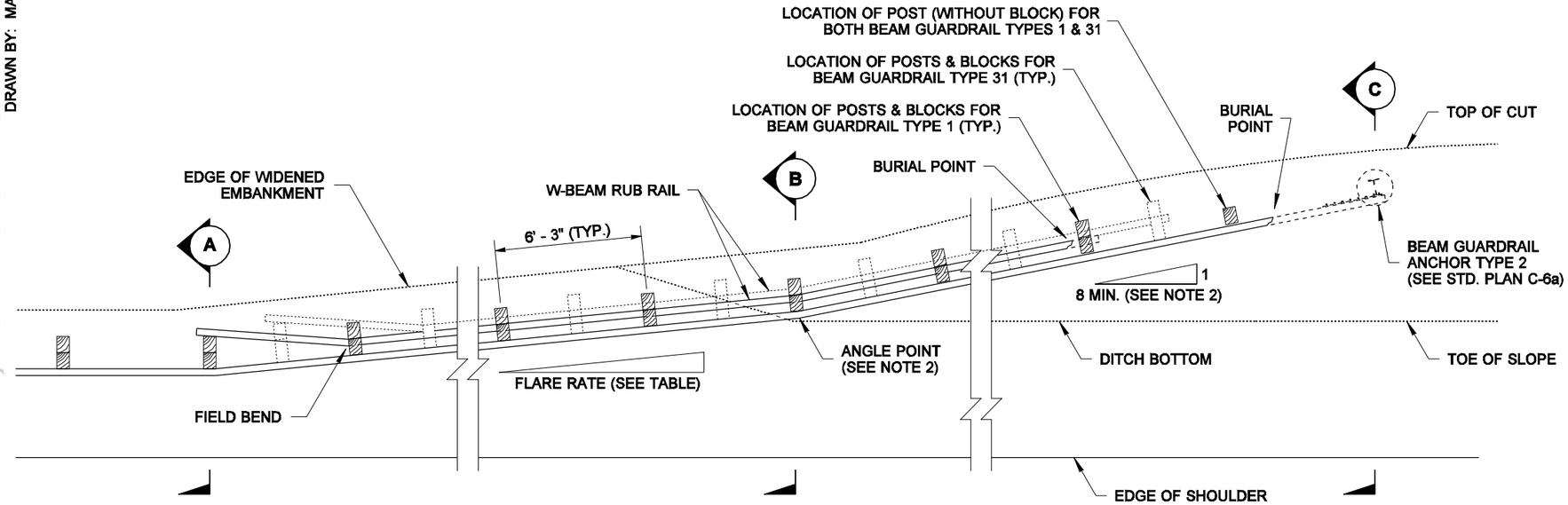

PLAN

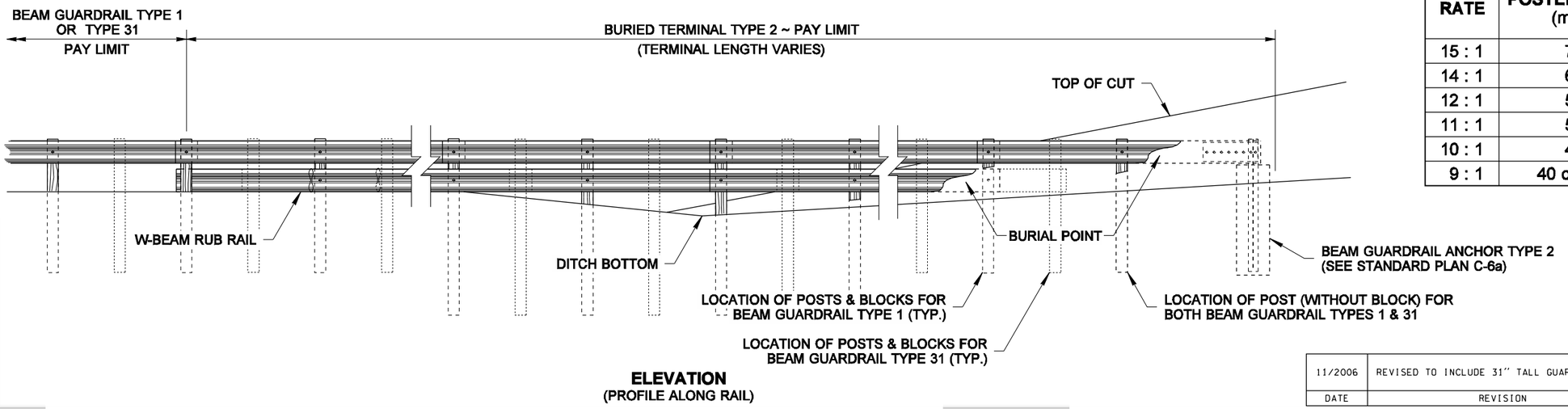

ELEVATION
(PROFILE ALONG RAIL)

NOTES

1. Posts installed on shoulder slopes steeper than 10H:1V shall be 8' long.
2. The flare rate of the guardrail may be steepened after crossing the ditch bottom to shorten the length of the terminal.
3. Determine the height of the W-Beam at the Anchor (**G**) by first calculating the perpendicular offset distance (**D**) from the edge of shoulder (**S**) to the Anchor (on station). Multiply that distance by 0.1, then subtract the product from the elevation of the same point (**S**) on the edge of shoulder used to obtain the offset distance (at the same station). Add Beam Guardrail design height (**H**) to that remainder for a sum that equals the elevation of the top of the W-Beam at the Anchor.

   Refer to SECTION "C":

   $$\text{Elevation}_{G} = \left(\text{Elevation}_{S} - D(0.1)\right) + H$$

   H = 27" (2.25') for Beam Guardrail Type 1
   H = 31" (2.58') for Beam Guardrail Type 31

FLARE RATE TABLE	
RATE	**POSTED SPEED** (mph)
15 : 1	70
14 : 1	60
12 : 1	55
11 : 1	50
10 : 1	45
9 : 1	40 or less

RICHARD BARSTOW ALBIN
STATE OF WASHINGTON
34042
REGISTERED
PROFESSIONAL ENGINEER

EXPIRES JULY 24, 2008

NOTE: THIS PLAN IS NOT A LEGAL ENGINEERING DOCUMENT BUT AN ELECTRONIC DUPLICATE. THE ORIGINAL, SIGNED BY THE ENGINEER AND APPROVED FOR PUBLICATION, IS KEPT ON FILE AT THE WASHINGTON STATE DEPARTMENT OF TRANSPORTATION. A COPY MAY BE OBTAINED UPON REQUEST.

BEAM GUARDRAIL BURIED TERMINAL TYPE 2

STANDARD PLAN C-4a

SHEET 1 OF 1 SHEET

APPROVED FOR PUBLICATION

Ken L. Smith — STATE DESIGN ENGINEER — *02-21-07* DATE

Washington State Department of Transportation

DATE	REVISION	BY
11/2006	REVISED TO INCLUDE 31" TALL GUARDRAIL	MAS

EFFECTIVE: APRIL 2, 2007 TO JANUARY 6, 2008

EFFECTIVE: APRIL 2, 2007 TO JANUARY 6, 2008

EFFECTIVE: APRIL 2, 2007 TO JANUARY 6, 2008

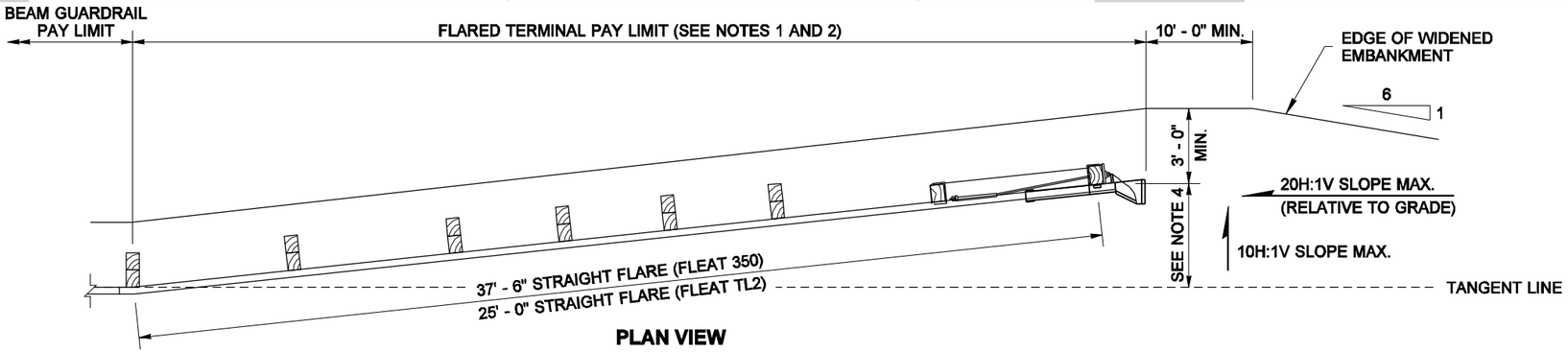

PLAN VIEW

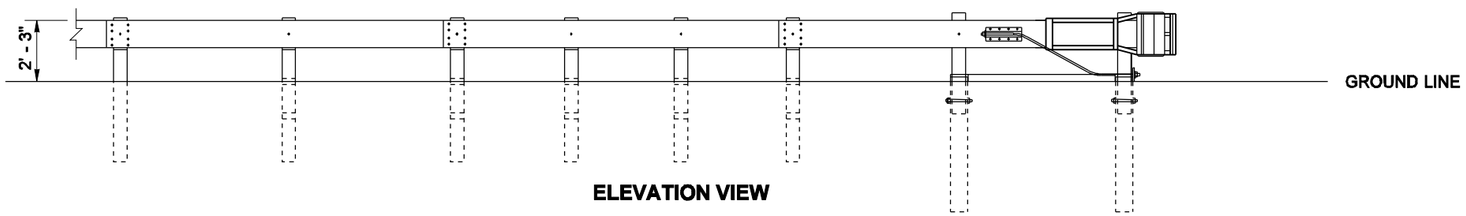

ELEVATION VIEW

FLEAT OPTION

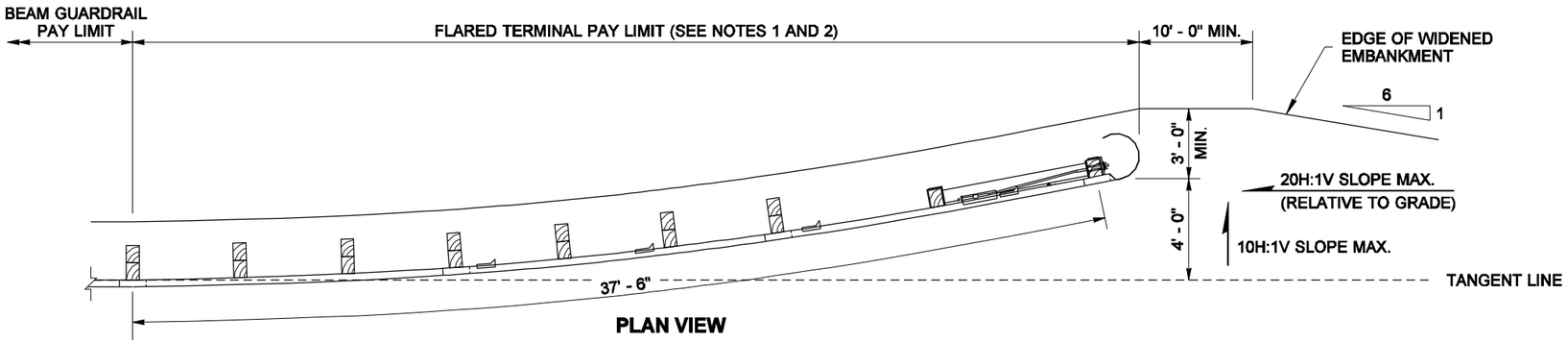

PLAN VIEW

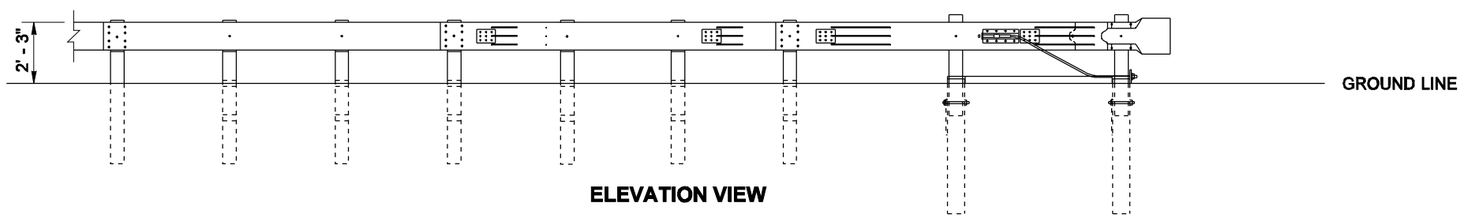

ELEVATION VIEW

SRT OPTION

NOTES

1. Unless otherwise indicated in the contract, the SRT - 350 (12.5, 8 Post) as manufactured by Trinity Industries, Inc., or a FLEAT 350 as manufactured by Road Systems Inc., shall be installed per manufacturer's recommendations. If specified in the Contract, the FLEAT TL2 as manufactured by Road Systems, Inc. shall be installed per manufacturers recommendations.

2. Where terminal is placed on a curve, and post offsets would result in the rail encroaching onto the shoulder (e.g., the inside of a curve), the posts shall be installed so that the faceof the rail is at the edge of the shoulder.

3. When snow load post washers and snow load rail washers are called for in the contract, the snow load rail washers must be omitted within the terminal limits.

4. Offset distances:

   FLEAT 350 ..... 4' - 0"

   FLEAT TL2 ..... 1' - 8" minimum

RICHARD BARSTOW ALBIN
STATE OF WASHINGTON
34042
REGISTERED
PROFESSIONAL ENGINEER

EXPIRES JULY 24, 2006

NOTE: THIS PLAN IS NOT A LEGAL ENGINEERING DOCUMENT BUT AN ELECTRONIC DUPLICATE. THE ORIGINAL, SIGNED BY THE ENGINEER AND APPROVED FOR PUBLICATION, IS KEPT ON FILE AT THE WASHINGTON STATE DEPARTMENT OF TRANSPORTATION. A COPY MAY BE OBTAINED UPON REQUEST.

BEAM GUARDRAIL FLARED TERMINAL

STANDARD PLAN C-4b

SHEET 1 OF 1 SHEET

APPROVED FOR PUBLICATION

Harold J. Peterfeso — STATE DESIGN ENGINEER — *06-08-06* — DATE

Washington State Department of Transportation

DATE	REVISION	BY
04/2006	Revised FLEAT Flare Lengths	AMC

EFFECTIVE: APRIL 2, 2007 TO JANUARY 6, 2008

EFFECTIVE: APRIL 2, 2007 TO JANUARY 6, 2008

NOTES

1. An ET-PLUS (TL3) as manufactured by Trinity Industries, Inc. or an SKT-350 as manufactured by Road Systems Inc. shall be installed according to manufacturer's recommendations. When a TL2 terminal is specified in the contract an ET-PLUS (TL2) as manufactured by Trinity Industries, Inc., or an SKT-TL2 as manufactured by Road Systems, Inc. shall be installed according to manufacturer's recommendations.

2. A reflectorized object marker shall be installed according to manufacturer's recommendations.

3. When snow load post washers and snow load rail washers are required by the contract, the snow load rail washers must not be installed within the terminal limits.

4. Terminal shall be installed at a taper, ensuring that end piece is entirely off shoulder.

5. Length for ET-PLUS (TL3) and SKT-350 is 50'. Length for ET-PLUS (TL2) and SKT-TL2 is 25'.

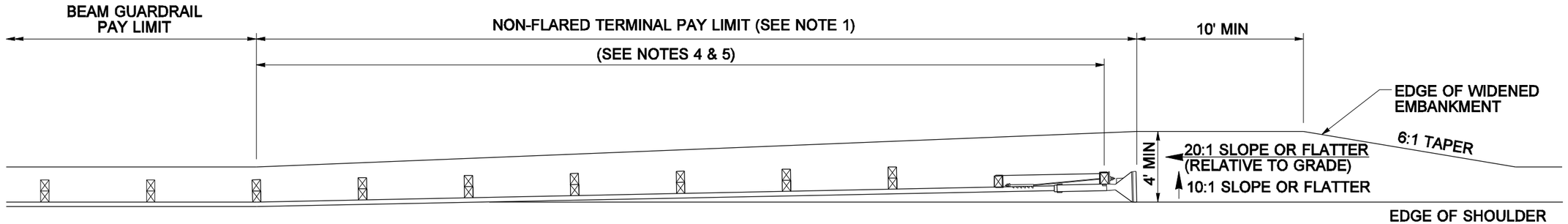

PLAN

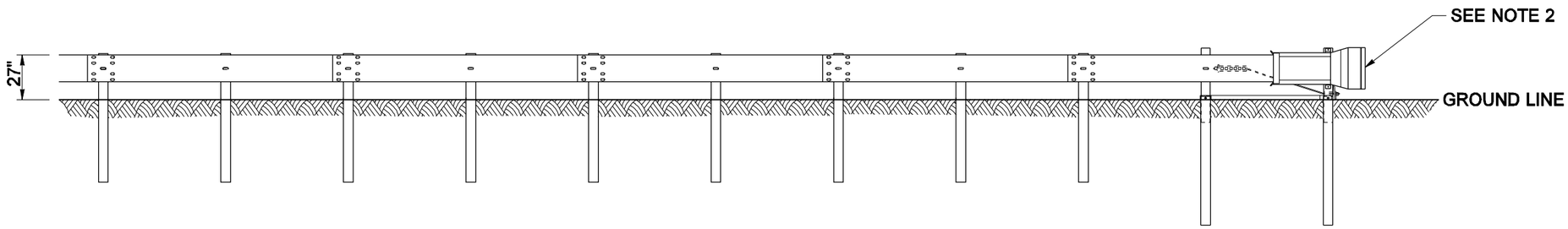

ELEVATION

RICHARD BARSTOW ALBIN
STATE OF WASHINGTON
34042
REGISTERED
PROFESSIONAL ENGINEER

EXPIRES JULY 24, 2004

NOTE: THIS PLAN IS NOT A LEGAL ENGINEERING DOCUMENT BUT AN ELECTRONIC DUPLICATE. THE ORIGINAL, SIGNED BY THE ENGINEER AND APPROVED FOR PUBLICATION, IS KEPT ON FILE AT THE WASHINGTON STATE DEPARTMENT OF TRANSPORTATION. A COPY MAY BE OBTAINED UPON REQUEST.

BEAM GUARDRAIL NON-FLARED TERMINAL

STANDARD PLAN C-4e

SHEET 1 OF 1 SHEET

APPROVED FOR PUBLICATION

Harold J. Peterfeso — STATE DESIGN ENGINEER — *02-20-03* — DATE

Washington State Department of Transportation

DATE	REVISION	BY
01/2003	REVISED NOTES 1 & 5; ADDED SLOPES.	RG

EFFECTIVE: APRIL 2, 2007 TO JANUARY 6, 2008

EFFECTIVE: APRIL 2, 2007 TO JANUARY 6, 2008

DRAWN BY: MONIQUE GLICK

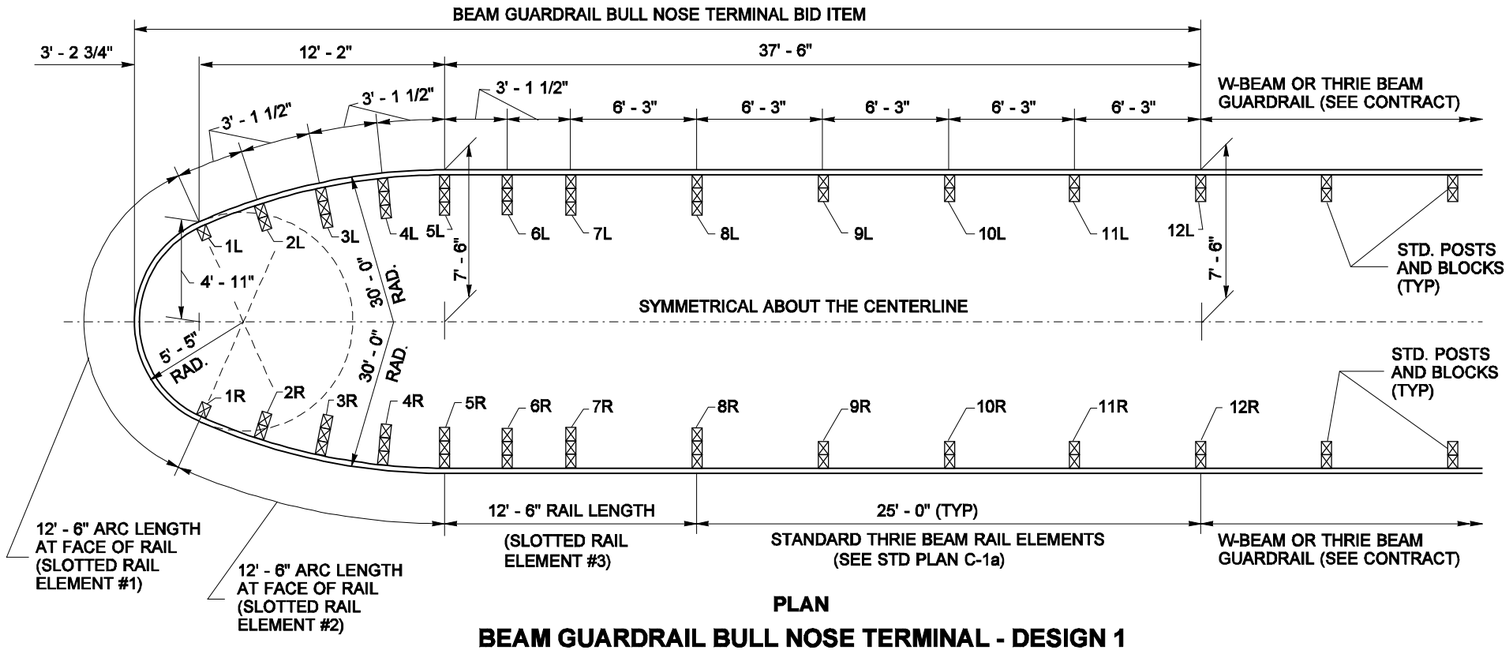

PLAN

BEAM GUARDRAIL BULL NOSE TERMINAL - DESIGN 1

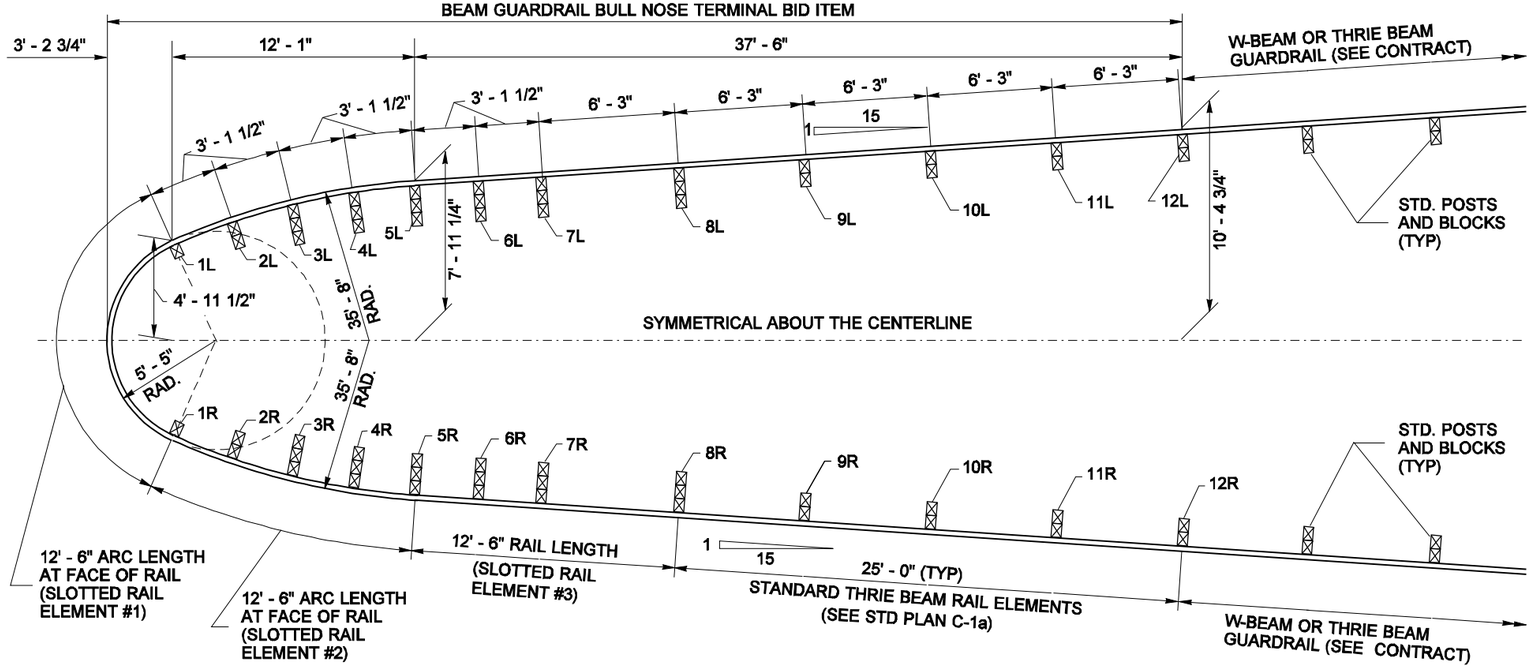

PLAN

BEAM GUARDRAIL BULL NOSE TERMINAL - DESIGN 2

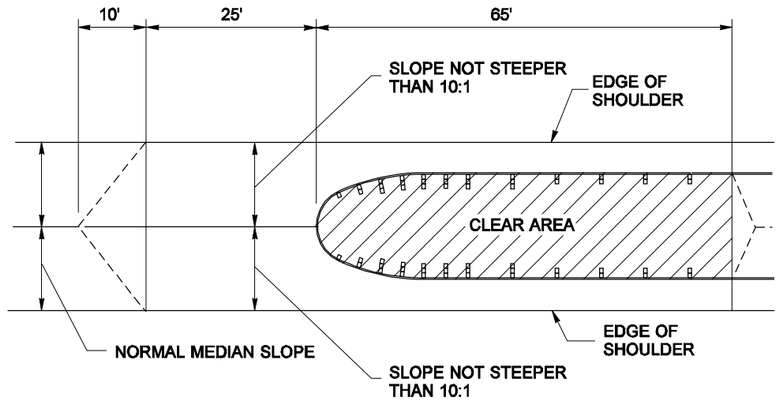

BULL NOSE GRADING PLAN

RICHARD BARSTOW ALBIN
STATE OF WASHINGTON
34042
REGISTERED
PROFESSIONAL ENGINEER

EXPIRES JULY 24, 2004

NOTE: THIS PLAN IS NOT A LEGAL ENGINEERING DOCUMENT BUT AN ELECTRONIC DUPLICATE. THE ORIGINAL, SIGNED BY THE ENGINEER AND APPROVED FOR PUBLICATION, IS KEPT ON FILE AT THE WASHINGTON STATE DEPARTMENT OF TRANSPORTATION. A COPY MAY BE OBTAINED UPON REQUEST.

BEAM GUARDRAIL BULL NOSE TERMINAL

STANDARD PLAN C-4f

SHEET 1 OF 4 SHEETS

APPROVED FOR PUBLICATION

Harold J. Peterfeso — STATE DESIGN ENGINEER — *06-30-04* — DATE

Washington State Department of Transportation

DATE	REVISION	BY
05/2004	ADDED U-BOLT CABLE CLIPS AND SECTION FOR ASSEMBLY ON SHEET 3	MHG

EFFECTIVE: APRIL 2, 2007 TO JANUARY 6, 2008

EFFECTIVE: APRIL 2, 2007 TO JANUARY 6, 2008

EFFECTIVE: APRIL 2, 2007 TO JANUARY 6, 2008

DRAWN BY: MONIQUE GLICK

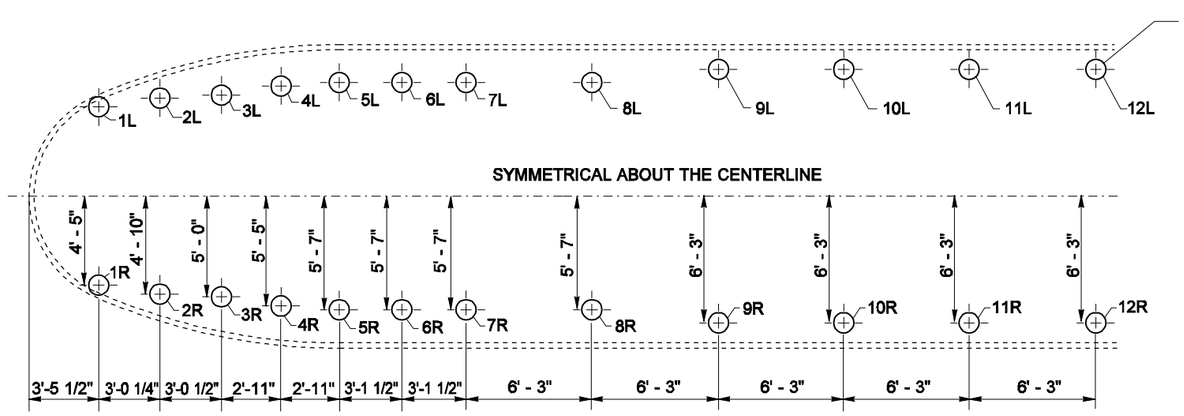

PLAN

GUARDRAIL POST LAYOUT - DESIGN 1

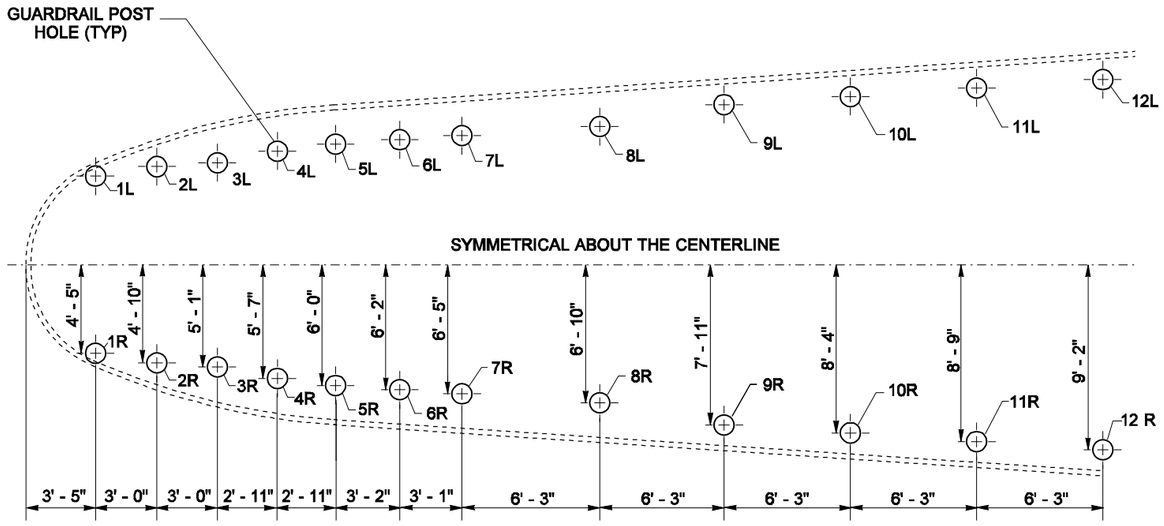

PLAN

GUARDRAIL POST LAYOUT - DESIGN 2

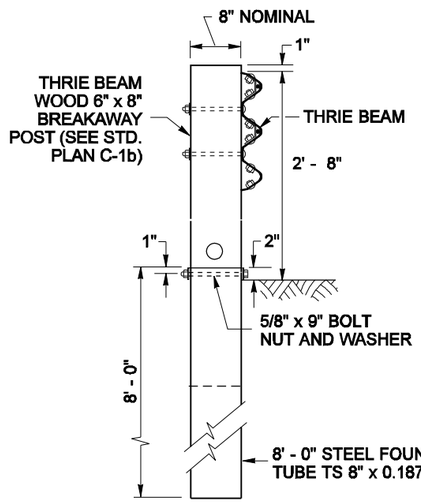

POST
1R & 1L

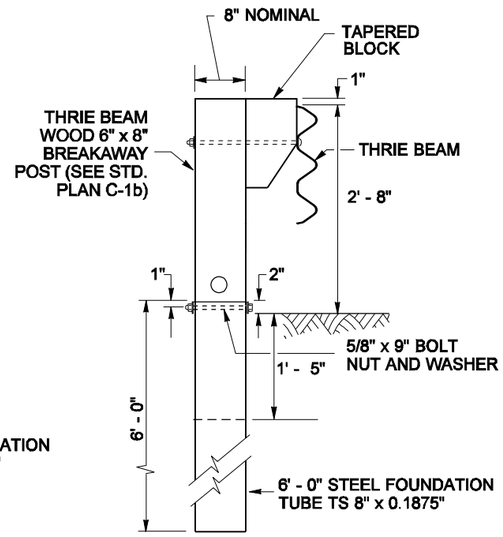

POST
2R & 2L

NOTE : CABLE BEARING PLATE NOT SHOWN

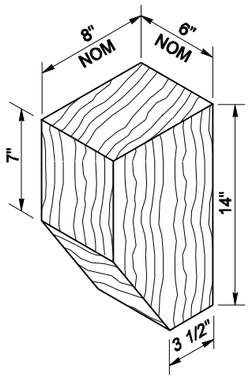

TAPERED BLOCK

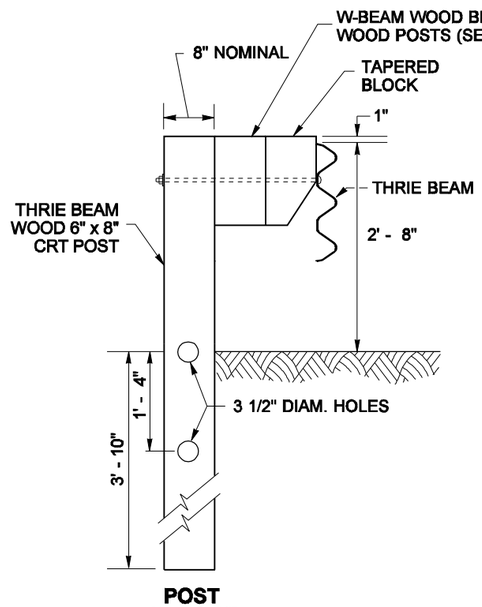

POST
3R TO 8R
3L TO 8L

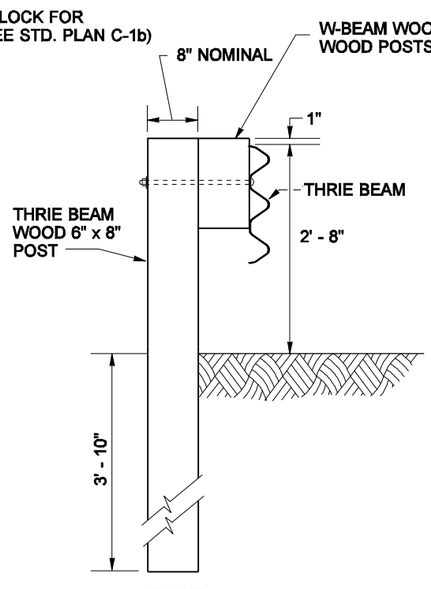

POST
9R TO 12R
9L TO 12L

RICHARD BARSTOW ALBIN
STATE OF WASHINGTON
34042
REGISTERED
PROFESSIONAL ENGINEER

EXPIRES JULY 24, 2004

NOTE: THIS PLAN IS NOT A LEGAL ENGINEERING DOCUMENT BUT AN ELECTRONIC DUPLICATE. THE ORIGINAL, SIGNED BY THE ENGINEER AND APPROVED FOR PUBLICATION, IS KEPT ON FILE AT THE WASHINGTON STATE DEPARTMENT OF TRANSPORTATION. A COPY MAY BE OBTAINED UPON REQUEST.

BEAM GUARDRAIL BULL NOSE TERMINAL

STANDARD PLAN C-4f

SHEET 2 OF 4 SHEETS

APPROVED FOR PUBLICATION

Harold J. Peterfeso — STATE DESIGN ENGINEER

06-30-04 — DATE

Washington State Department of Transportation

EFFECTIVE: APRIL 2, 2007 TO JANUARY 6, 2008

EFFECTIVE: APRIL 2, 2007 TO JANUARY 6, 2008

EFFECTIVE: APRIL 2, 2007 TO JANUARY 6, 2008

EFFECTIVE: APRIL 2, 2007 TO JANUARY 6, 2008

DRAWN BY: MONIQUE GLICK

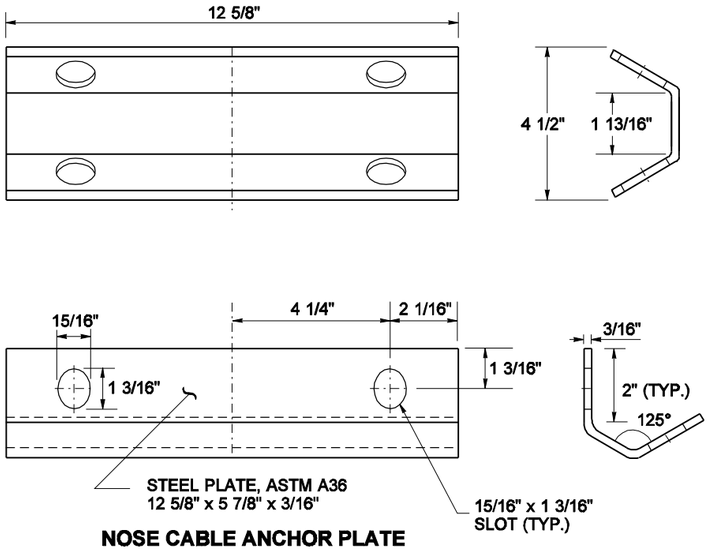

NOSE CABLE ANCHOR PLATE

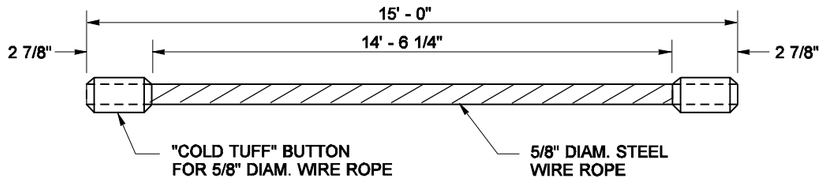

NOSE CABLE

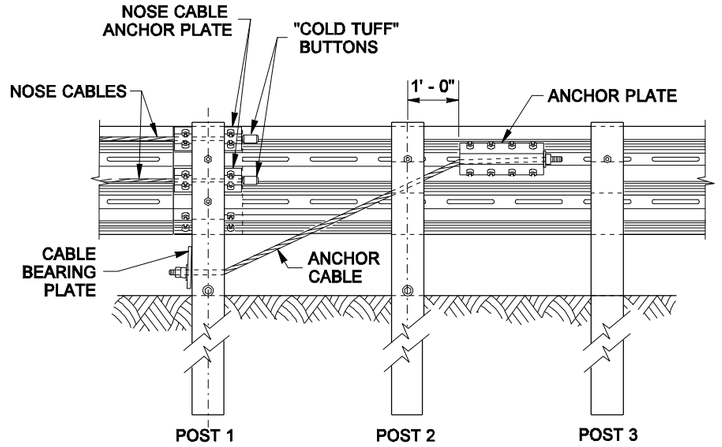

CABLE ANCHOR & BRACKET ASSEMBLY

FOR ANCHOR PLATE, CABLE END PLATE, AND ANCHOR CABLE (SEE STD PLAN C-6f)

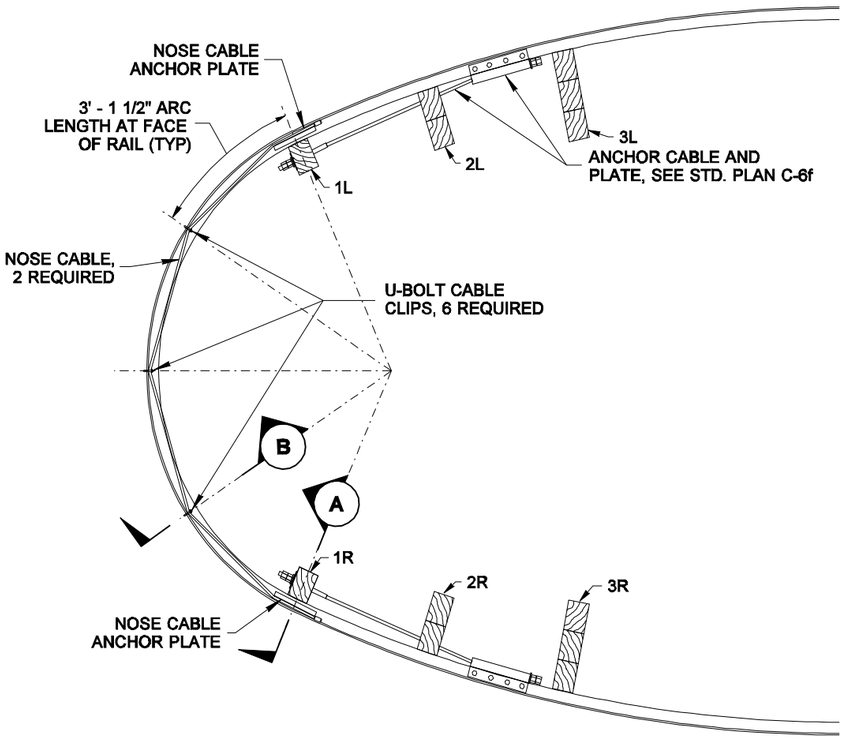

PLAN - THRIE BEAM NOSE

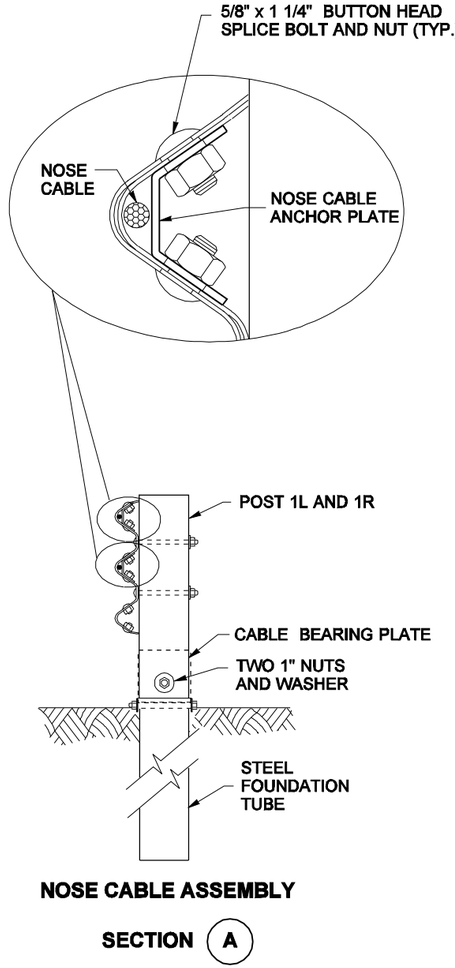

NOSE CABLE ASSEMBLY

SECTION (A)

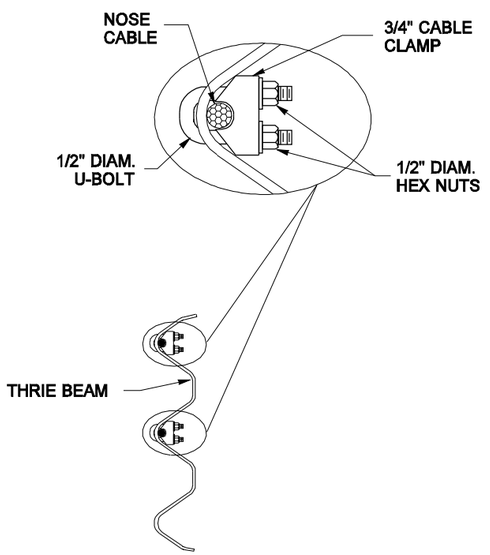

U-BOLT CABLE CLIP ASSEMBLY

SECTION (B)

RICHARD BARSTOW ALBIN
STATE OF WASHINGTON
34042
REGISTERED
PROFESSIONAL ENGINEER

EXPIRES JULY 24, 2004

NOTE: THIS PLAN IS NOT A LEGAL ENGINEERING DOCUMENT BUT AN ELECTRONIC DUPLICATE. THE ORIGINAL, SIGNED BY THE ENGINEER AND APPROVED FOR PUBLICATION, IS KEPT ON FILE AT THE WASHINGTON STATE DEPARTMENT OF TRANSPORTATION. A COPY MAY BE OBTAINED UPON REQUEST.

BEAM GUARDRAIL
BULL NOSE TERMINAL

STANDARD PLAN C-4f

SHEET 3 OF 4 SHEETS

APPROVED FOR PUBLICATION

Harold J. Peterfeso — STATE DESIGN ENGINEER — *06-30-04* — DATE

Washington State Department of Transportation

EFFECTIVE: APRIL 2, 2007 TO JANUARY 6, 2008

EFFECTIVE: APRIL 2, 2007 TO JANUARY 6, 2008

DRAWN BY: MONIQUE GLICK

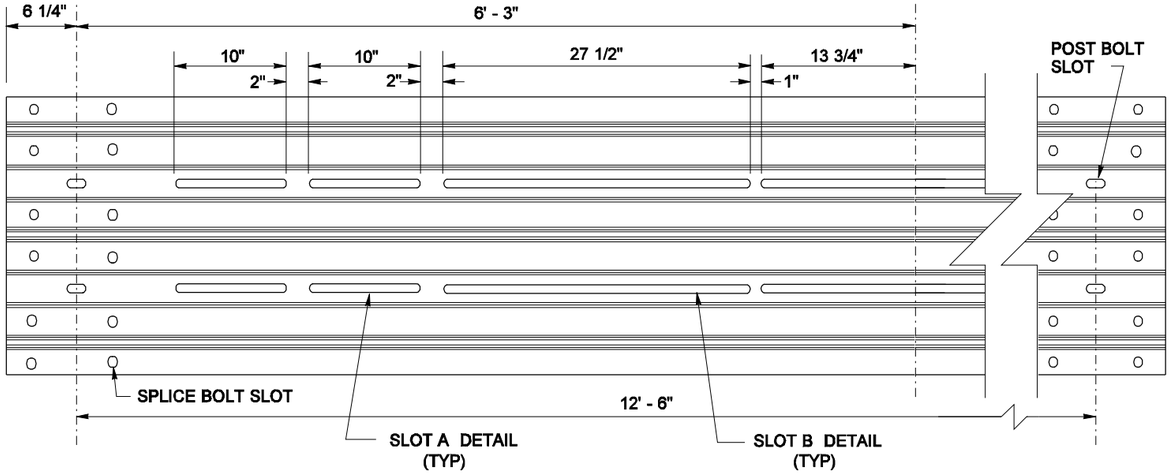

SLOTTED THRIE BEAM RAIL ELEMENT #1

SEE STD PLAN C-1a FOR RAIL ELEMENT DETAILS

(RAIL DIMENSIONS SHOWN ARE BEFORE BENDING TO RADIUS SHOWN IN PLAN)

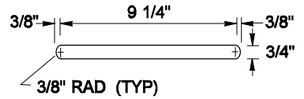

SLOT A DETAIL

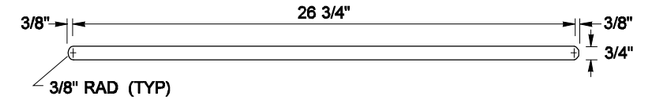

SLOT B DETAIL

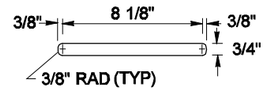

SLOT C DETAIL

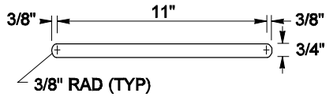

SLOT D DETAIL

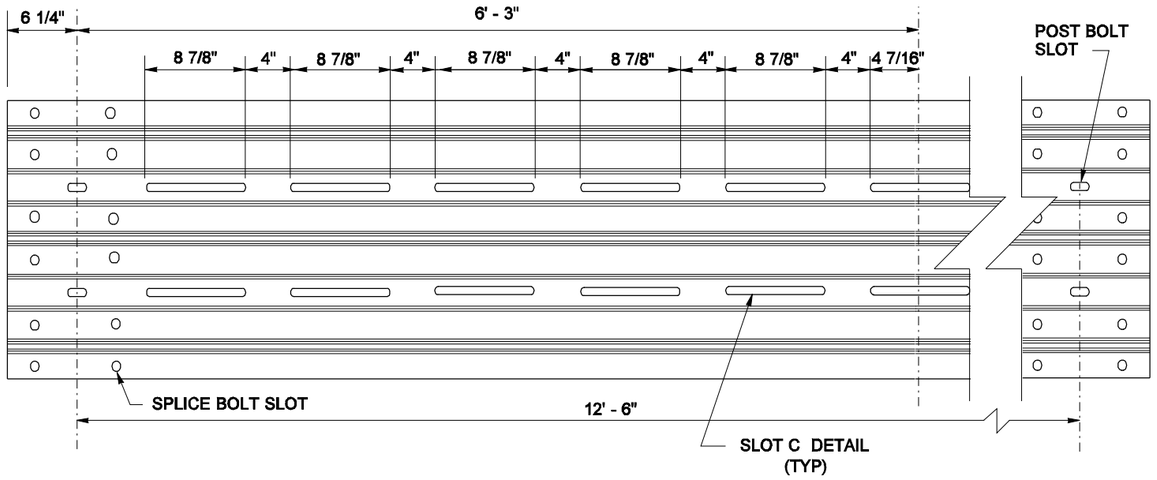

SLOTTED THRIE BEAM RAIL ELEMENT #2

SEE STD PLAN C-1a FOR RAIL ELEMENT DETAILS

(RAIL DIMENSIONS SHOWN ARE BEFORE BENDING TO RADIUS SHOWN IN PLAN)

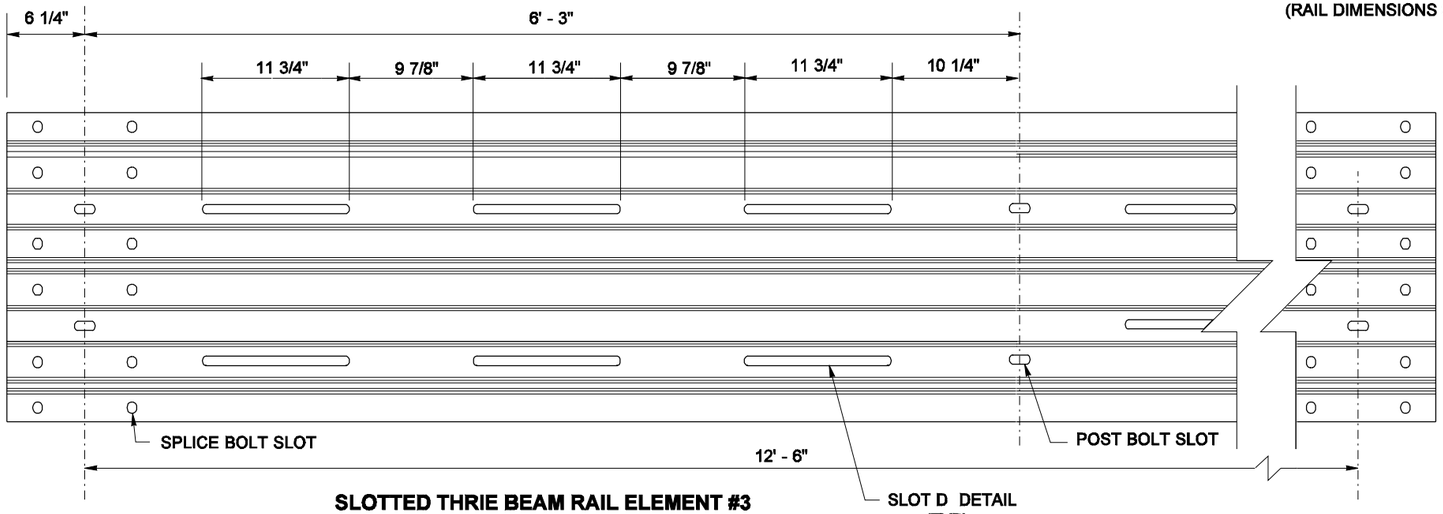

SLOTTED THRIE BEAM RAIL ELEMENT #3

SEE STD PLAN C-1a FOR RAIL ELEMENT DETAILS

RICHARD BARSTOW ALBIN
STATE OF WASHINGTON
34042
REGISTERED
PROFESSIONAL ENGINEER

EXPIRES JULY 24, 2004

NOTE: THIS PLAN IS NOT A LEGAL ENGINEERING DOCUMENT BUT AN ELECTRONIC DUPLICATE. THE ORIGINAL, SIGNED BY THE ENGINEER AND APPROVED FOR PUBLICATION, IS KEPT ON FILE AT THE WASHINGTON STATE DEPARTMENT OF TRANSPORTATION. A COPY MAY BE OBTAINED UPON REQUEST.

BEAM GUARDRAIL BULL NOSE TERMINAL

STANDARD PLAN C-4f

SHEET 4 OF 4 SHEETS

APPROVED FOR PUBLICATION

Harold J. Peterfeso — STATE DESIGN ENGINEER

06-30-04 — DATE

Washington State Department of Transportation

EFFECTIVE: APRIL 2, 2007 TO JANUARY 6, 2008

EFFECTIVE: APRIL 2, 2007 TO JANUARY 6, 2008

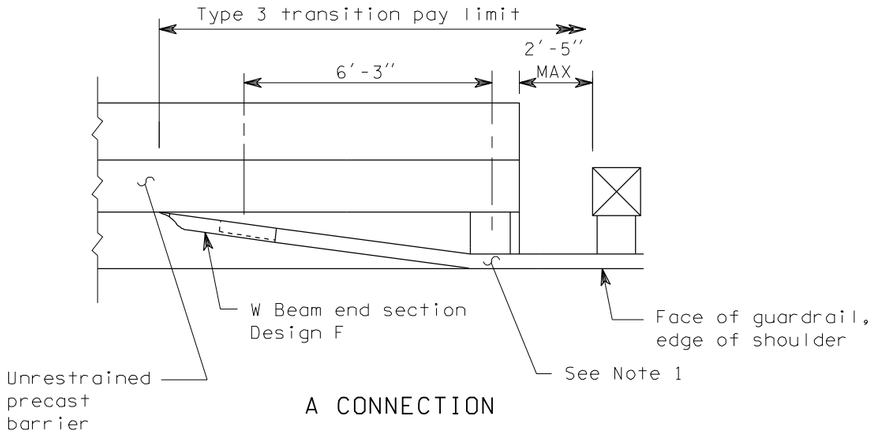

A CONNECTION

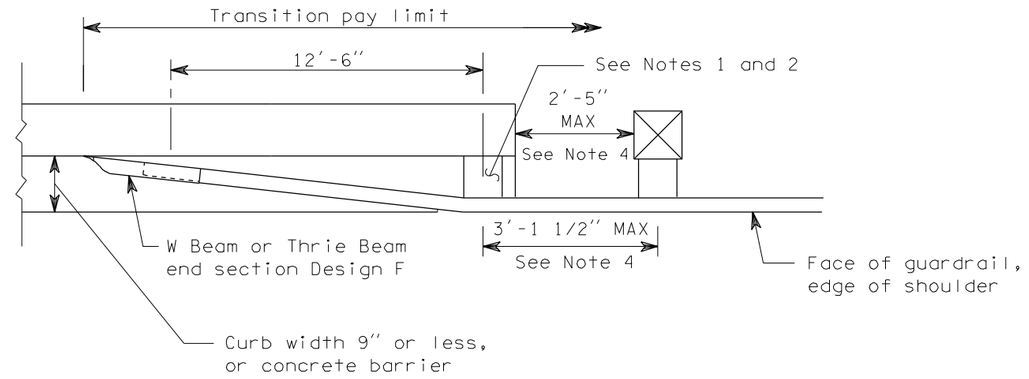

B CONNECTION

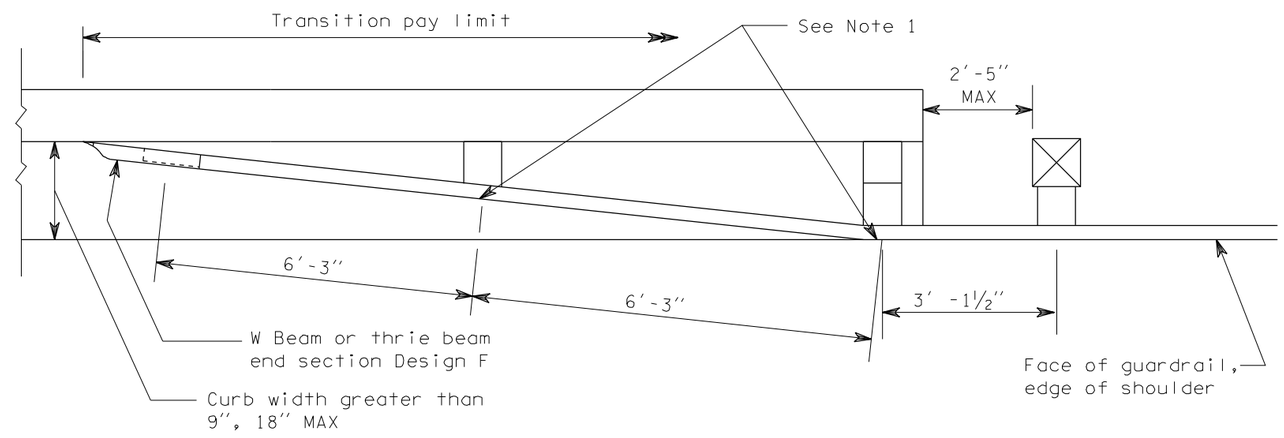

C CONNECTION

EFFECTIVE: APRIL 2, 2007 TO JANUARY 6, 2008

EFFECTIVE: APRIL 2, 2007 TO JANUARY 6, 2008

NOTES

1. Attach guardrail to bridge rail or concrete barrier with 7/8″ diameter high strength bolts (Standard Specification 9-06.5(4)) with thin slab ferrule inserts or resin bonded anchors. See the Contract Plans.

2. If the last guardrail post is 3″ or less from the end of the bridge barrier, this attachment and blockout is not necessary.

3. This case is also applicable for vertical faces with no curbs.

4. When B Connection is used with Type 1A Transition, the maximum spacing between bolts is 6′-3″.

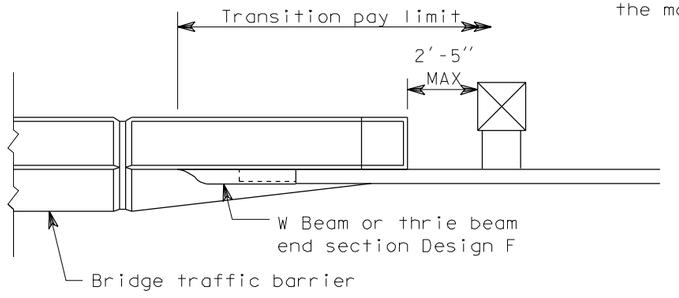

D CONNECTION

See Note 3

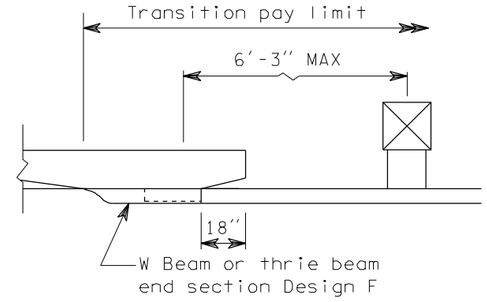

E CONNECTION

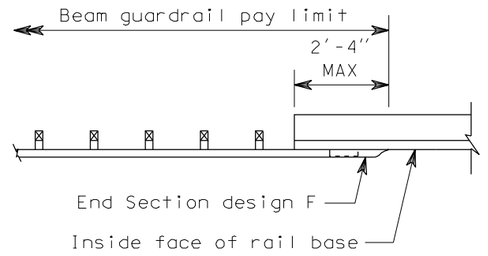

Direction of traffic
(one-way only)

F CONNECTION

RICHARD BARSTOW ALBIN
STATE OF WASHINGTON
34042
REGISTERED
PROFESSIONAL ENGINEER

EXPIRES JULY 24, 2004

NOTE: THIS PLAN IS NOT A LEGAL ENGINEERING DOCUMENT BUT AN ELECTRONIC DUPLICATE. THE ORIGINAL, SIGNED BY THE ENGINEER, AND APPROVED FOR PUBLICATION, IS KEPT ON FILE AT THE WASHINGTON STATE DEPARTMENT OF TRANSPORTATION. A COPY MAY BE OBTAINED UPON REQUEST.

GUARDRAIL CONNECTION TO BRIDGE RAIL OR CONCRETE BARRIER

STANDARD PLAN C-5

SHEET 1 OF 1 SHEET

APPROVED FOR PUBLICATION

Harold J. Peterfeso — STATE DESIGN ENGINEER — *10-31-03* — DATE

Washington State Department of Transportation

DATE	REVISION	BY
09/2003	REVISED NOTE 1; ADDED NOTE 4	RG

EFFECTIVE: APRIL 2, 2007 TO JANUARY 6, 2008

EFFECTIVE: APRIL 2, 2007 TO JANUARY 6, 2008

EFFECTIVE: APRIL 2, 2007 TO JANUARY 6, 2008

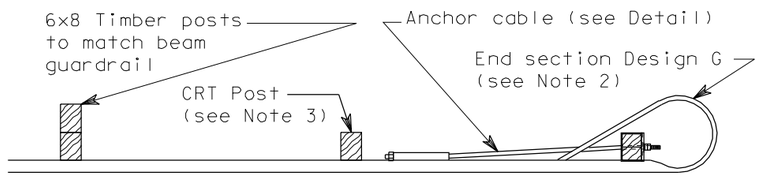

PLAN

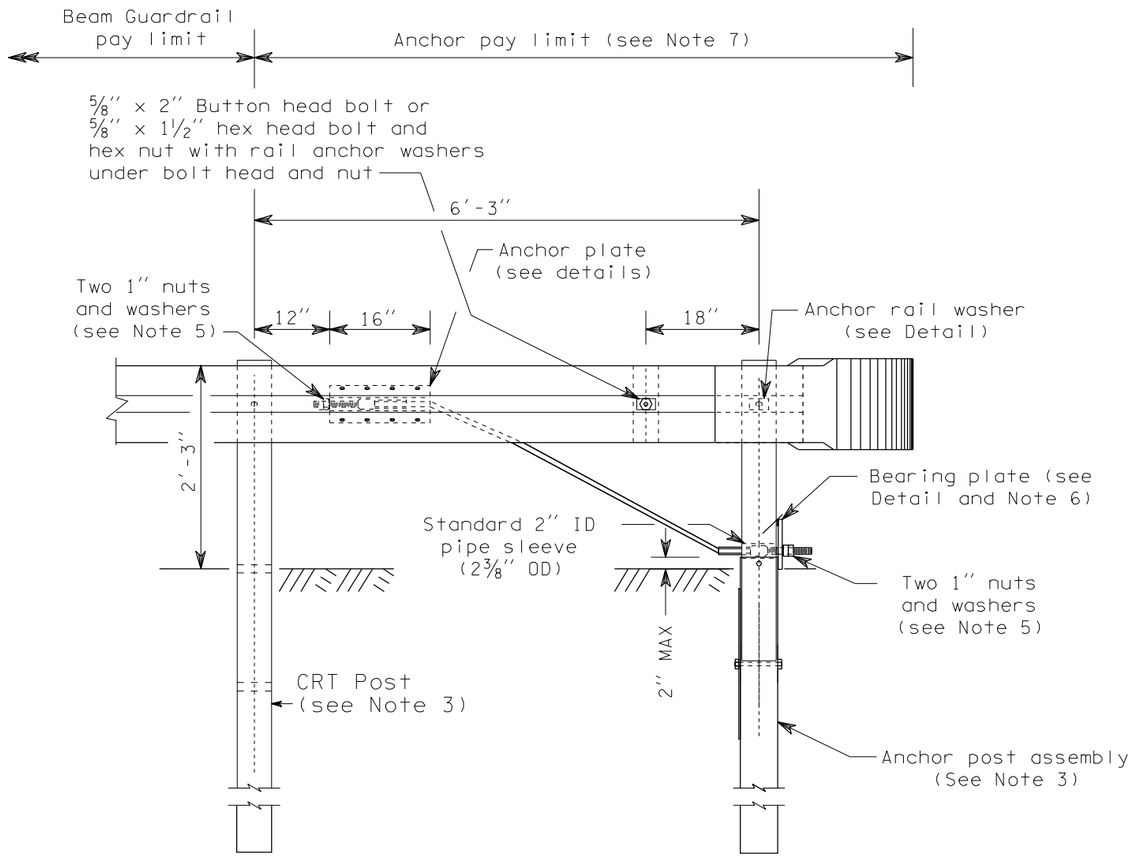

TYPE 1 ANCHOR

NOTES

1. Anchor plate may be constructed from 1/4" plates welded to equal strength and dimensions as shown.
2. For end section details see Standard Plan "Beam Guardrail End Sections".
3. For post details, see Standard Plan "Beam Guardrail Posts and Blocks".
4. Eight 5/8" x 1 1/2" machine bolts with hex nut and washer. Place washer on face side of rail.
5. Outside nut shall be torqued against inside nut a minimum of 100 ft-lbs.
6. Toenail bearing plate with 10d nail at corners to prevent turning.
7. Anchor pay limit does not apply when anchor is included in a Beam Guardrail Terminal.

BEAM GUARDRAIL ANCHOR
TYPE 1

CLIFFORD E. MANSFIELD
STATE OF WASHINGTON
15224
REGISTERED
PROFESSIONAL ENGINEER
EXPIRES MAY 3, 1998

NOTE: THIS PLAN IS NOT A LEGAL ENGINEERING DOCUMENT BUT AN ELECTRONIC DUPLICATE OF THE ORIGINAL, SIGNED BY THE ENGINEER AND APPROVED FOR PUBLICATION, IS KEPT ON FILE AT THE WASHINGTON STATE DEPARTMENT OF TRANSPORTATION. A COPY MAY BE OBTAINED UPON REQUEST.

STANDARD PLAN C-6

APPROVED FOR PUBLICATION

Donald K. Nelson — 05/30/97
STATE DESIGN ENGINEER — DATE

WASHINGTON STATE DEPARTMENT OF TRANSPORTATION
OLYMPIA, WASHINGTON

Sheet 1 of 2 Sheets

EFFECTIVE: APRIL 2, 2007 TO JANUARY 6, 2008

EFFECTIVE: APRIL 2, 2007 TO JANUARY 6, 2008
EFFECTIVE: APRIL 2, 2007 TO JANUARY 6, 2008

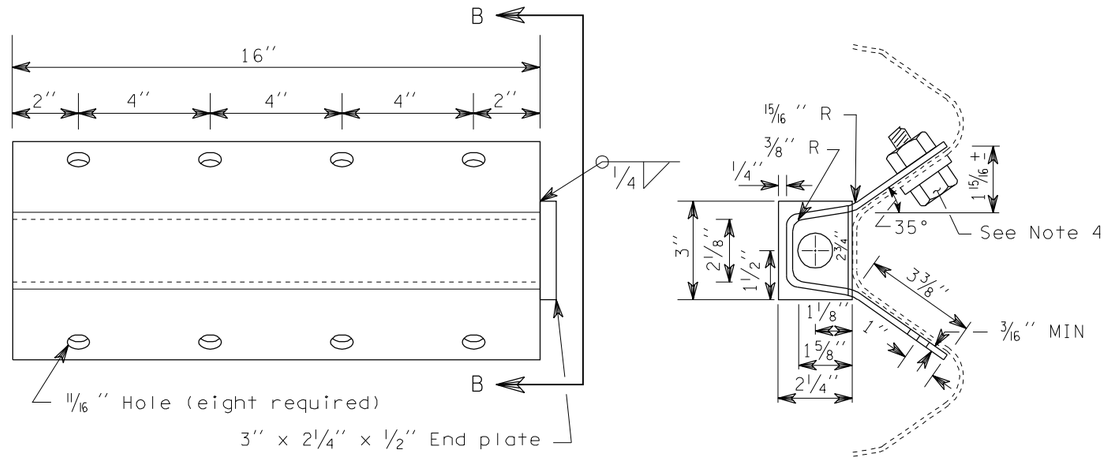

ELEVATION

SECTION B-B

ANCHOR PLATE
(See Note 1)

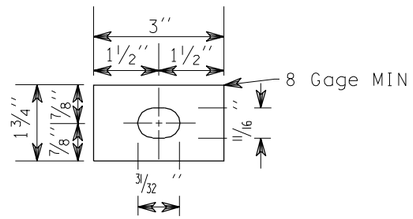

ANCHOR RAIL WASHER

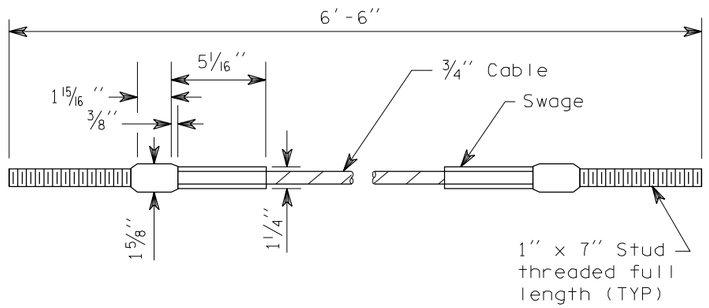

ANCHOR CABLE

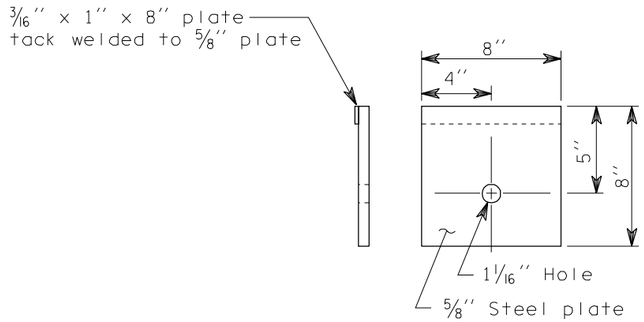

BEARING PLATE

BEAM GUARDRAIL ANCHOR TYPE 1

CLIFFORD E. MANSFIELD
STATE OF WASHINGTON
15224
REGISTERED
PROFESSIONAL ENGINEER
EXPIRES MAY 3, 1998

NOTE: THIS PLAN IS NOT A LEGAL ENGINEERING DOCUMENT UNLESS IT HAS BEEN APPROVED FOR PUBLICATION, IS SIGNED BY THE ENGINEER WHO APPROVED IT FOR PUBLICATION, IS KEPT ON FILE AT THE WASHINGTON STATE DEPARTMENT OF TRANSPORTATION. A COPY MAY BE OBTAINED UPON REQUEST.

STANDARD PLAN C-6

APPROVED FOR PUBLICATION

Donald K. Nelson — STATE DESIGN ENGINEER — *05/30/97* — DATE

WASHINGTON STATE DEPARTMENT OF TRANSPORTATION
OLYMPIA, WASHINGTON

EFFECTIVE: APRIL 2, 2007 TO JANUARY 6, 2008
EFFECTIVE: APRIL 2, 2007 TO JANUARY 6, 2008

EFFECTIVE: APRIL 2, 2007 TO JANUARY 6, 2008

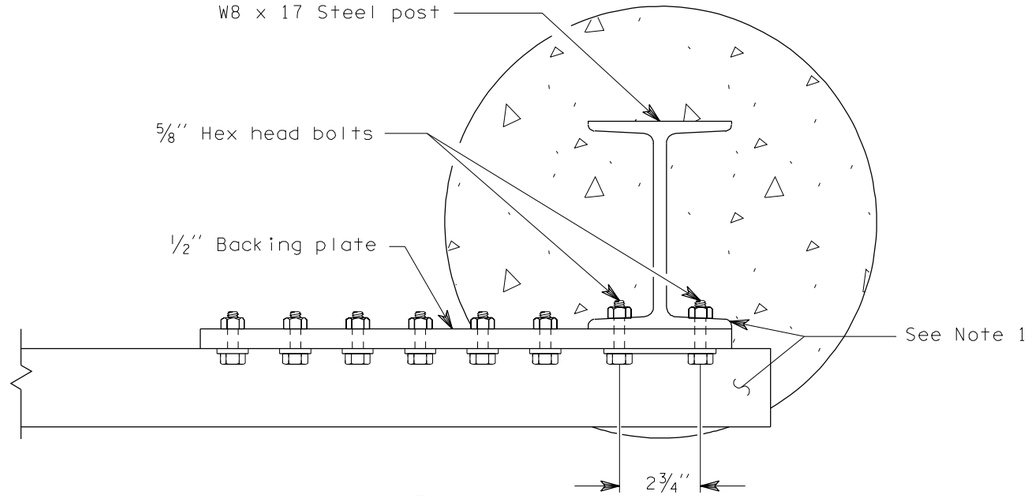

PLAN

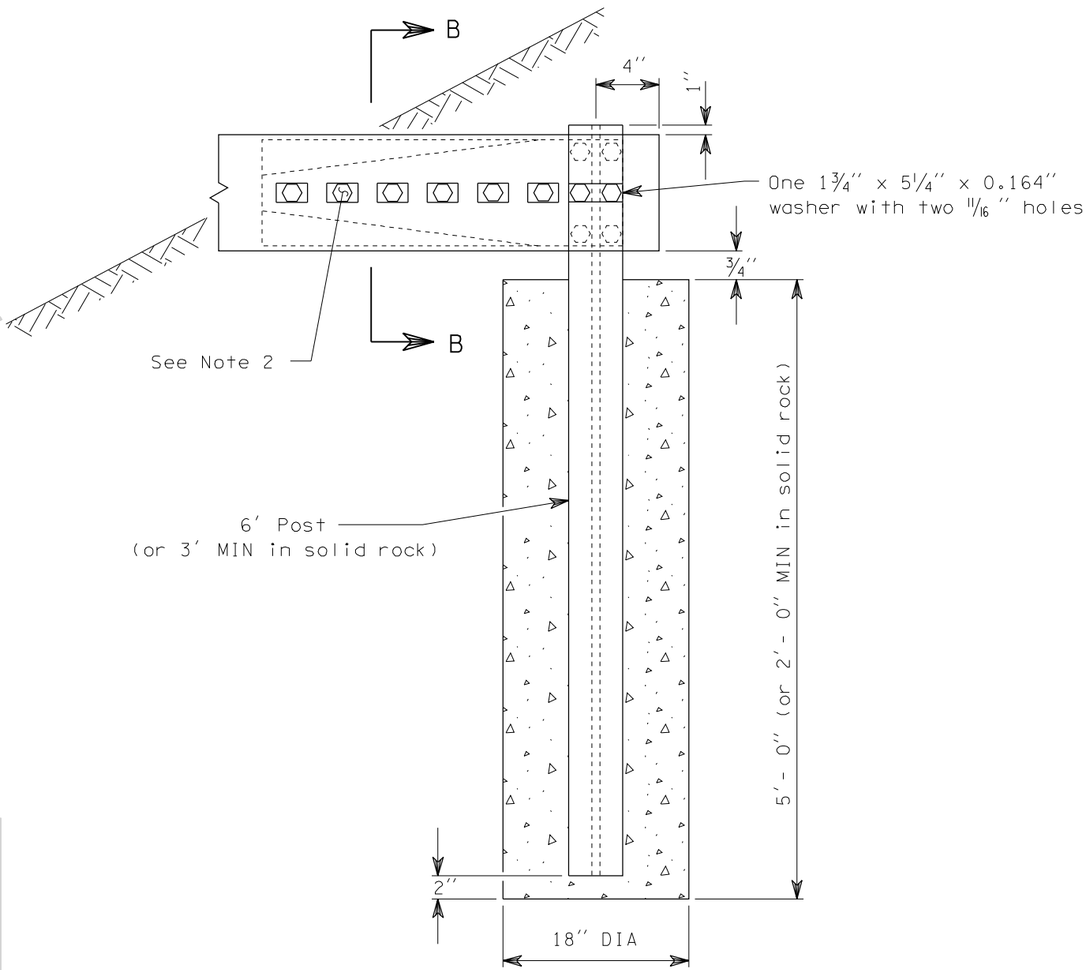

ELEVATION

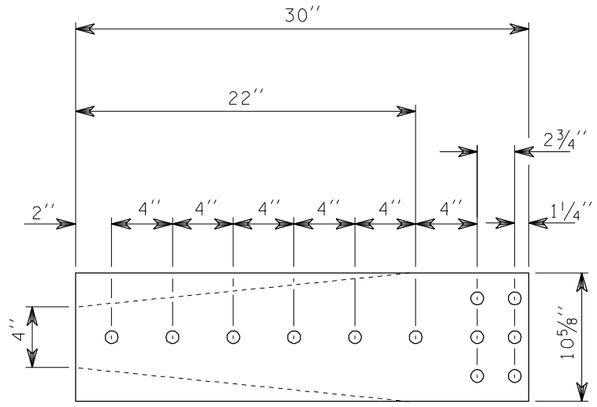

BACKING PLATE

NOTES

1. Rail section and W8 x 17 post shall be fabricated to receive 5/8" hex head bolts as shown.
2. All bolts shall be high strength 5/8" hex head bolts with anchor rail washers.

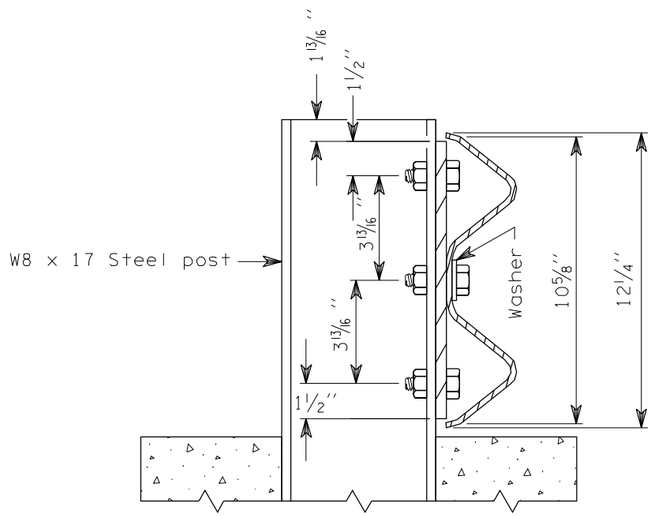

SECTION B-B

BEAM GUARDRAIL ANCHOR TYPE 2



NOTE: THIS PLAN IS NOT A LEGAL ENGINEERING DOCUMENT BUT AN ELECTRONIC DUPLICATE. THE ORIGINAL, SIGNED BY THE ENGINEER AND APPROVED FOR PUBLICATION, IS KEPT ON FILE AT THE WASHINGTON STATE DEPARTMENT OF TRANSPORTATION. A COPY MAY BE OBTAINED UPON REQUEST.

STANDARD PLAN C-6a

APPROVED FOR PUBLICATION

Donald K. Nelson — 03/14/97

STATE DESIGN ENGINEER — DATE

WASHINGTON STATE DEPARTMENT OF TRANSPORTATION
OLYMPIA, WASHINGTON

EFFECTIVE: APRIL 2, 2007 TO JANUARY 6, 2008

EFFECTIVE: APRIL 2, 2007 TO JANUARY 6, 2008
EFFECTIVE: APRIL 2, 2007 TO JANUARY 6, 2008

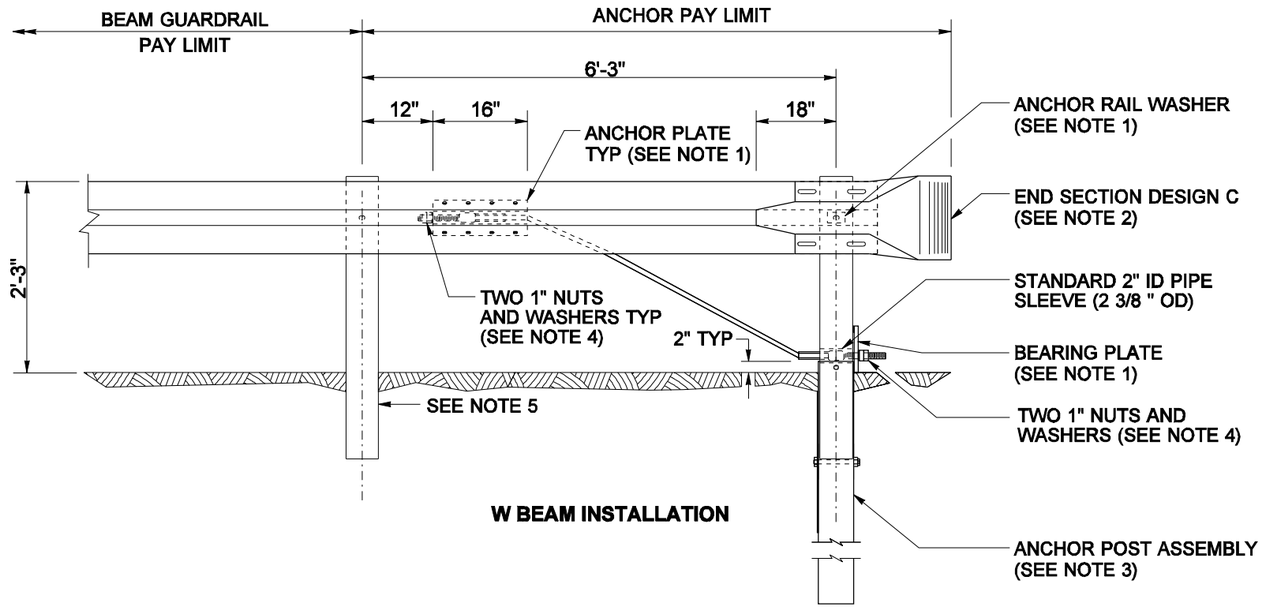

W BEAM INSTALLATION

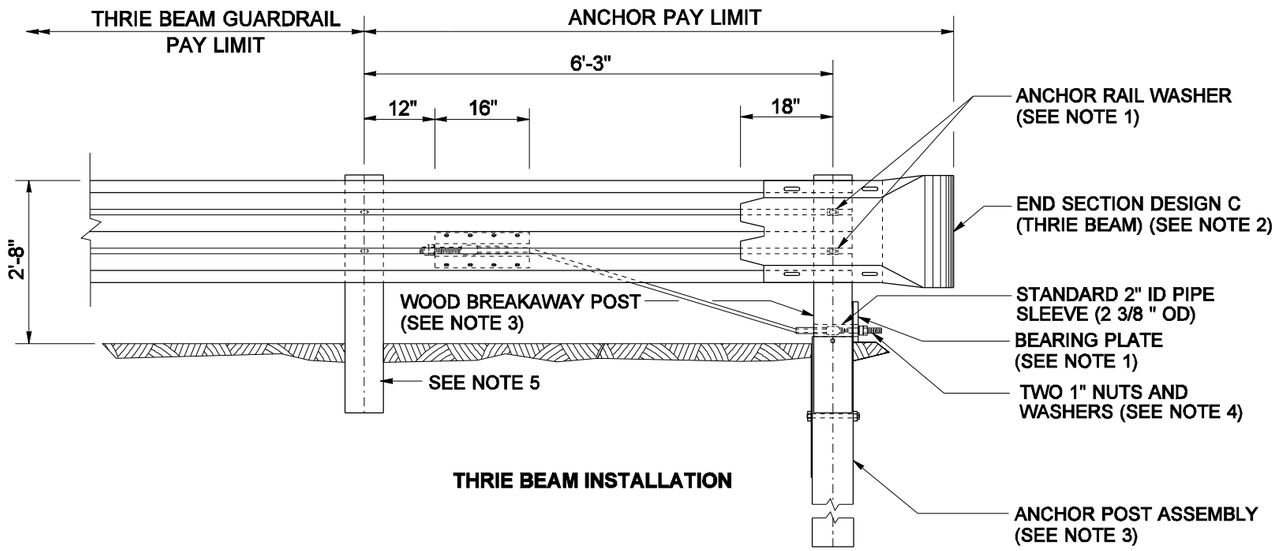

THRIE BEAM INSTALLATION

NOTES

1. For details, see Standard Plan C-6.
2. For end section details see Standard Plan C-7 or C-7a.
3. For details, see Standard Plan C-1b.
4. Outside nut shall be torqued against inside nut a minimum of 100 ft.-lbs.
5. Post and block shall match beam guardrail posts.

CLIFFORD E. MANSFIELD
STATE OF WASHINGTON
15224
REGISTERED
PROFESSIONAL ENGINEER

EXPIRES MAY 3, 2000

NOTE: THIS PLAN IS NOT A LEGAL ENGINEERING DOCUMENT BUT AN ELECTRONIC DUPLICATE. THE ORIGINAL, SIGNED BY THE ENGINEER AND APPROVED FOR PUBLICATION, IS KEPT ON FILE AT THE WASHINGTON STATE DEPARTMENT OF TRANSPORTATION. A COPY MAY BE OBTAINED UPON REQUEST.

BEAM GUARDRAIL ANCHOR TYPE 4

STANDARD PLAN C-6c

DATE	REVISION	BY
12/99	MODIFIED "END SECTIONS" TO DESIGN "C", CHANGED NOTE 2 AND DETAIL TITLES.	TWS

APPROVED FOR PUBLICATION

Clifford E. Mansfield — DEPUTY STATE DESIGN ENGINEER — *01/06/00* DATE

WASHINGTON STATE DEPARTMENT OF TRANSPORTATION
OLYMPIA, WASHINGTON

EFFECTIVE: APRIL 2, 2007 TO JANUARY 6, 2008
EFFECTIVE: APRIL 2, 2007 TO JANUARY 6, 2008

EFFECTIVE: APRIL 2, 2007 TO JANUARY 6, 2008

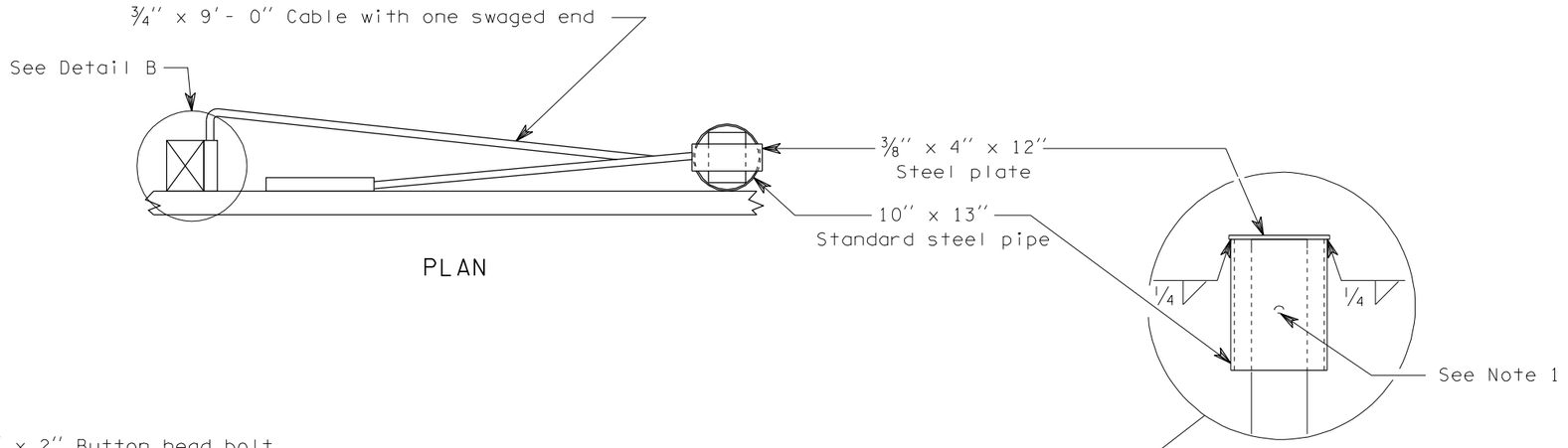

PLAN

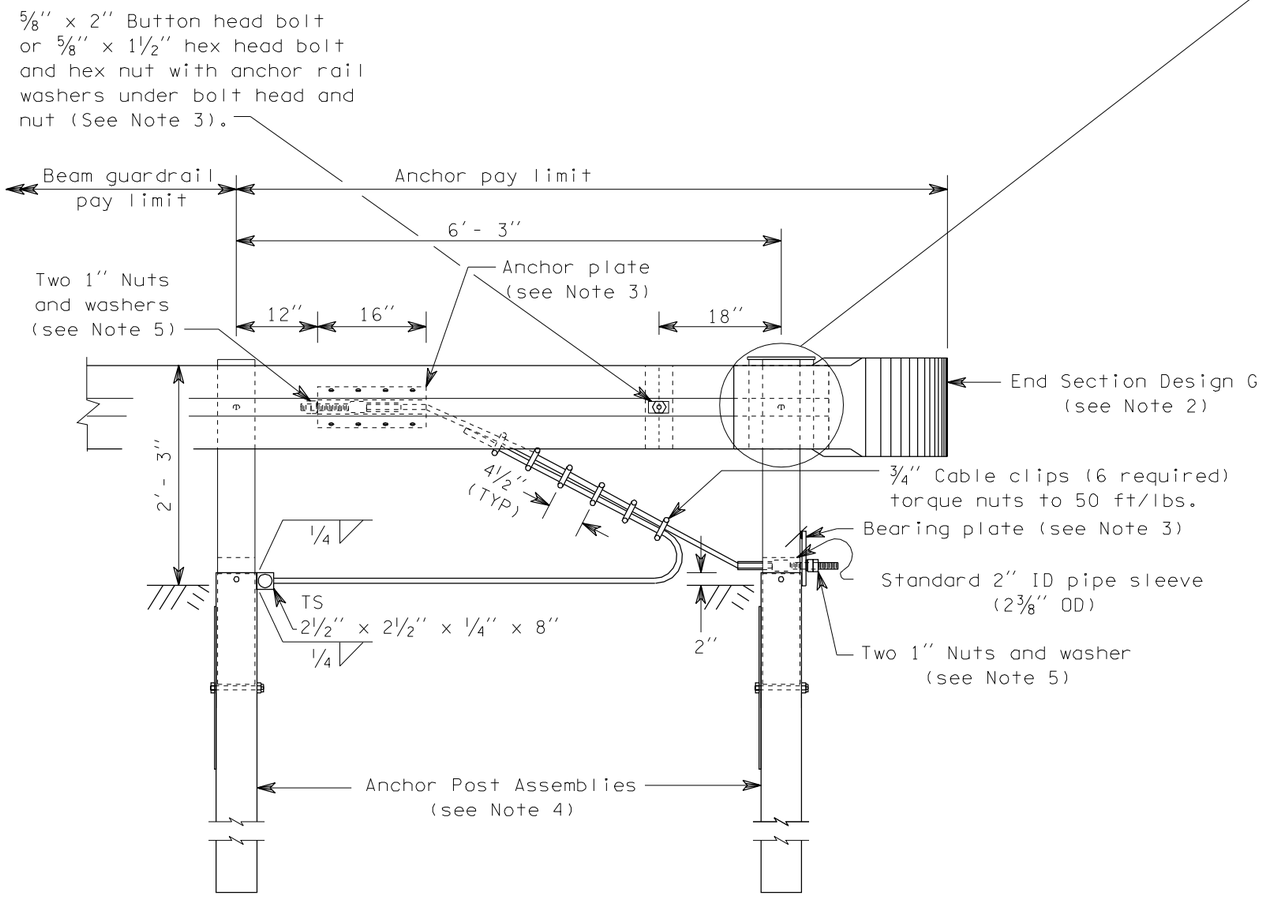

TYPE 5 ANCHOR

NOTES

1. Attach W-beam to steel pipe with ⅝'' x 1¼'' button head bolt with no washer. No connection to the post is required.
2. For end section details see Standard Plan, ''Beam Guardrail End Sections''.
3. For details see Standard Plan, ''Beam Guardrail Anchor Type 1''.
4. For details see Standard Plan, ''Beam Guardrail Posts''.
5. Outside nut shall be torqued against inside nut a minimum of 100 ft/lbs.

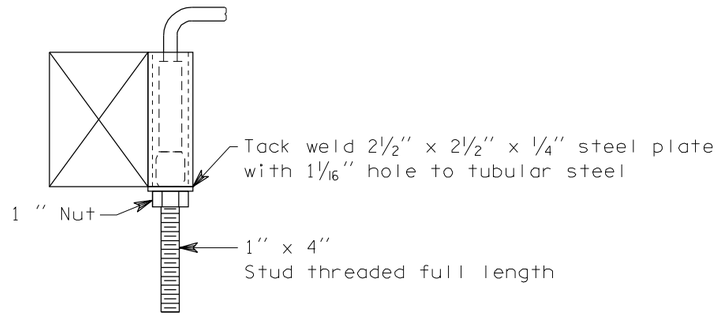

DETAIL B

BEAM GUARDRAIL ANCHOR TYPE 5

CLIFFORD E. MANSFIELD
STATE OF WASHINGTON
15224
REGISTERED
PROFESSIONAL ENGINEER
EXPIRES MAY 3, 1998

NOTE: THIS PLAN IS NOT A LEGAL ENGINEERING DOCUMENT UNLESS IT HAS BEEN SIGNED, DATED AND SEALED BY THE ENGINEER AND APPROVED FOR PUBLICATION. A SIGNED COPY IS FILE AT THE WASHINGTON STATE DEPARTMENT OF TRANSPORTATION. A COPY MAY BE OBTAINED UPON REQUEST.

STANDARD PLAN C-6d

APPROVED FOR PUBLICATION

Donald K. Nelson — STATE DESIGN ENGINEER — *05/30/97* — DATE

WASHINGTON STATE DEPARTMENT OF TRANSPORTATION
OLYMPIA, WASHINGTON

EFFECTIVE: APRIL 2, 2007 TO JANUARY 6, 2008

EFFECTIVE: APRIL 2, 2007 TO JANUARY 6, 2008

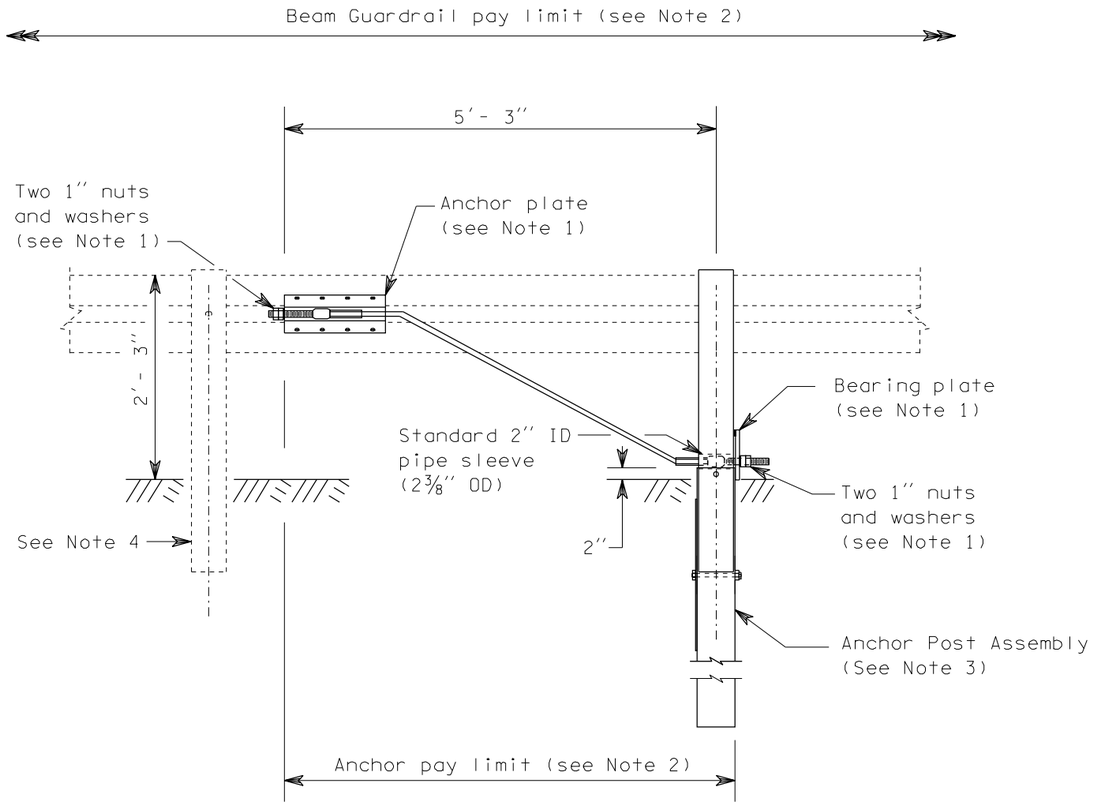

TYPE 7 ANCHOR

NOTES

1. For details, see Standard Plan, "Beam Guardrail Anchor Type 1".

2. The rail element is to be included in the "Beam Guardrail" pay item. The "Anchor" pay item includes the anchor post, anchor plate, anchor cable, bearing plate, nuts and washers.

3. For details, see Standard Plan, "Beam Guardrail Posts and Blocks".

4. Post shall match beam guardrail posts.

BEAM GUARDRAIL ANCHOR
TYPE 7

CLIFFORD E. MANSFIELD
STATE OF WASHINGTON
15224
REGISTERED
PROFESSIONAL ENGINEER
EXPIRES MAY 3, 1998

NOTE: THIS PLAN IS NOT A LEGAL ENGINEERING DOCUMENT BUT AN ELECTRONIC DUPLICATE. THE ORIGINAL SIGNED BY THE ENGINEER AND APPROVED FOR PUBLICATION IS KEPT ON FILE AT THE WASHINGTON STATE DEPARTMENT OF TRANSPORTATION. A COPY MAY BE OBTAINED UPON REQUEST.

STANDARD PLAN C-6f

APPROVED FOR PUBLICATION

Donald K. Nelson — 07/25/97
STATE DESIGN ENGINEER — DATE

WASHINGTON STATE DEPARTMENT OF TRANSPORTATION
OLYMPIA, WASHINGTON

EFFECTIVE: APRIL 2, 2007 TO JANUARY 6, 2008

EFFECTIVE: APRIL 2, 2007 TO JANUARY 6, 2008

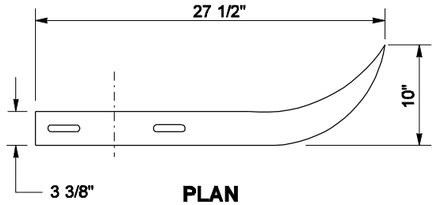

PLAN

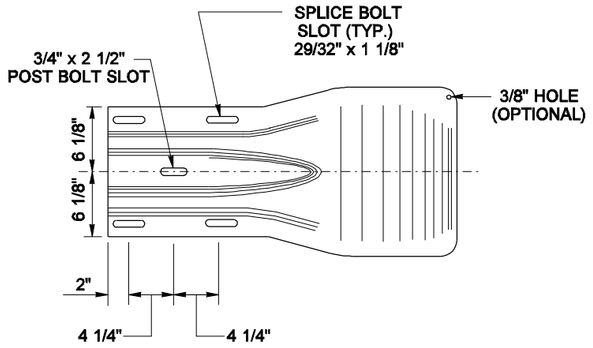

ELEVATION

DESIGN A

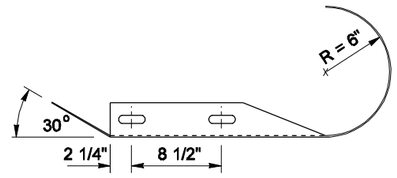

PLAN

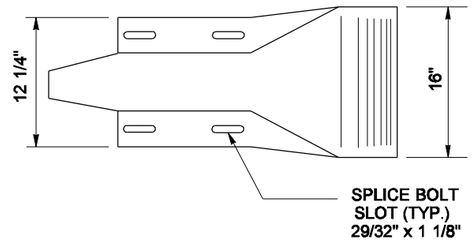

ELEVATION

DESIGN C

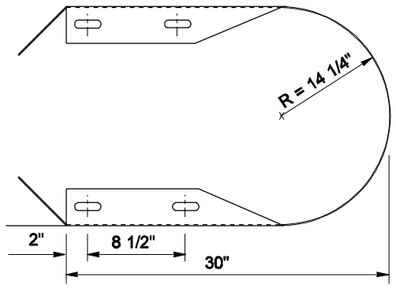

PLAN

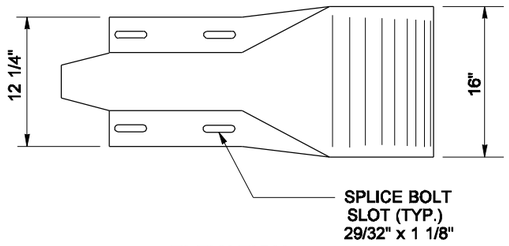

ELEVATION

DESIGN D

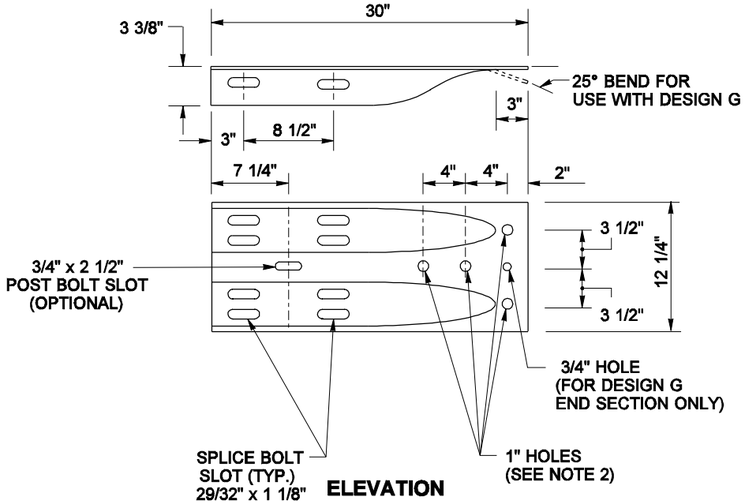

ELEVATION

DESIGN F

(SEE NOTE 4)

NOTES

1. End Section Design G shall be used except where noted on the plans or contract.
2. Attach guardrail to bridge rail or concrete barrier with 7/8" diameter high strength bolts (Standard Specification 9-06.5(4)) with thin slab ferrule inserts or resin bonded anchors. See the Contract Plans.
3. A single piece having similar dimensional shape to Design G and mating with the W-beam guardrail is an alternate.
4. In cases where Design "F" end section is lapped on the outside of the guardrail, a galvanized 1" ID, 2" OD, 0.134" thick, narrow Type A Plain Washer or a anchor rail washer shall be placed under the splice bolt heads.

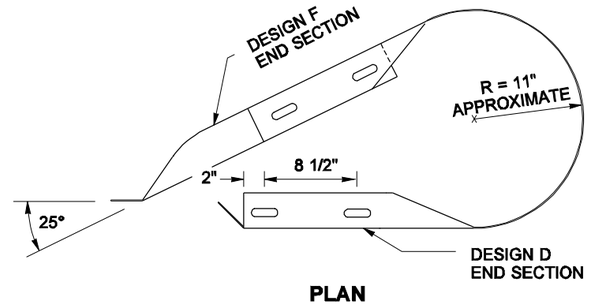

PLAN

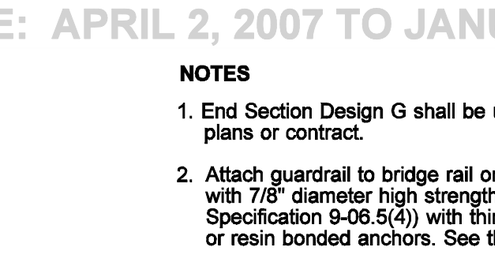

ELEVATION

DESIGN G

(SEE NOTE 3)



NOTE: THIS PLAN IS NOT A LEGAL ENGINEERING DOCUMENT BUT AN ELECTRONIC DUPLICATE. THE ORIGINAL, SIGNED BY THE ENGINEER AND APPROVED FOR PUBLICATION, IS KEPT ON FILE AT THE WASHINGTON STATE DEPARTMENT OF TRANSPORTATION. A COPY MAY BE OBTAINED UPON REQUEST.

BEAM GUARDRAIL END SECTIONS

STANDARD PLAN C-7

SHEET 1 OF 1 SHEET

APPROVED FOR PUBLICATION

Harold J. Peterfeso — STATE DESIGN ENGINEER — *10-31-03* DATE

Washington State Department of Transportation

DATE	REVISION	BY
10/2003	REV. NOTE 2.	MHG

EFFECTIVE: APRIL 2, 2007 TO JANUARY 6, 2008

EFFECTIVE: APRIL 2, 2007 TO JANUARY 6, 2008

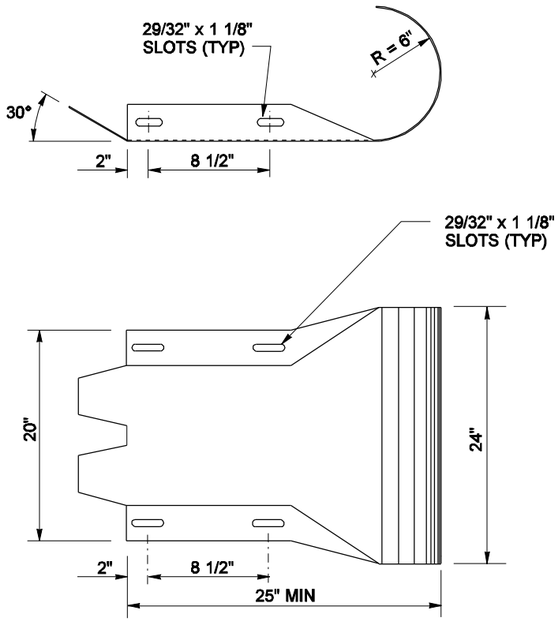

DESIGN C (THRIE BEAM)

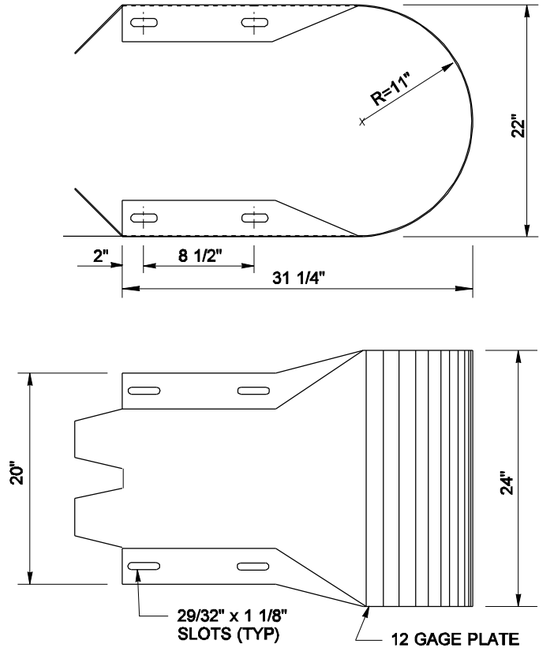

DESIGN D (THRIE BEAM)

NOTES

1. Attach guardrail to bridge rail or concrete barrier with 7/8" diameter high strength bolts (Standard Specification 9-06.5(4)) with thin slab ferrule inserts or resin bonded anchors. See the Contract Plans.
2. In cases where Design F End Section is lapped on the outside of the guardrail, a galvanized 1" ID, 2" OD, 0.134" thick, narrow Type A Plain Washer or an anchor rail washer will be placed under the splice bolt heads.

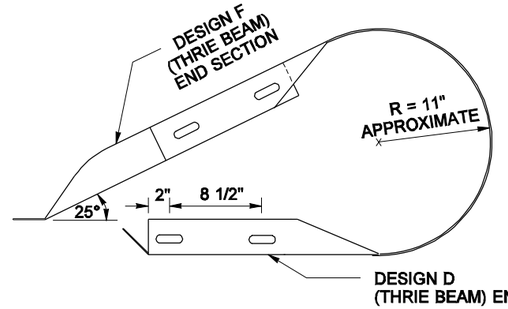

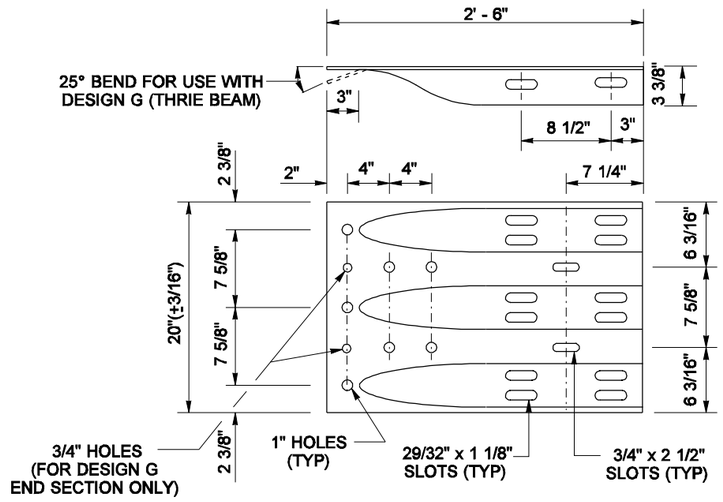

DESIGN F (THRIE BEAM)

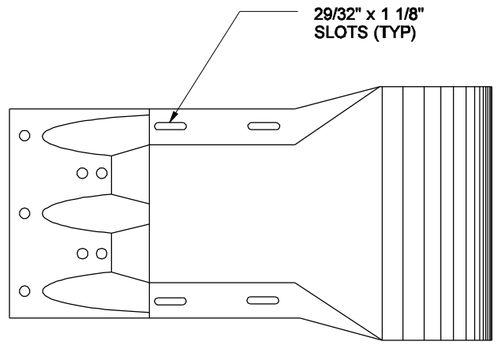

DESIGN G (THRIE BEAM)

RICHARD BARSTOW ALBIN
STATE OF WASHINGTON
34042
REGISTERED
PROFESSIONAL ENGINEER

EXPIRES JULY 24, 2004

NOTE: THIS PLAN IS NOT A LEGAL ENGINEERING DOCUMENT BUT AN ELECTRONIC DUPLICATE. THE ORIGINAL, SIGNED BY THE ENGINEER, AND APPROVED FOR PUBLICATION, IS KEPT ON FILE AT THE WASHINGTON STATE DEPARTMENT OF TRANSPORTATION. A COPY MAY BE OBTAINED UPON REQUEST.

THRIE BEAM END SECTIONS

STANDARD PLAN C-7a

SHEET 1 OF 1 SHEET

APPROVED FOR PUBLICATION

Harold J. Peterfeso — STATE DESIGN ENGINEER — *10-31-03* DATE

Washington State Department of Transportation

DATE	REVISION	BY
10/2003	REV. NOTE 1.	MHG

EFFECTIVE: APRIL 2, 2007 TO JANUARY 6, 2008

EFFECTIVE: APRIL 2, 2007 TO JANUARY 6, 2008

DRAWN BY: MARK SUJKA

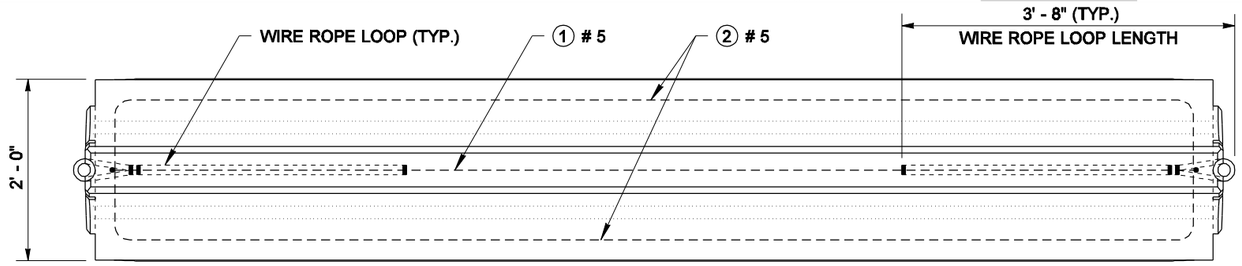

TOP VIEW

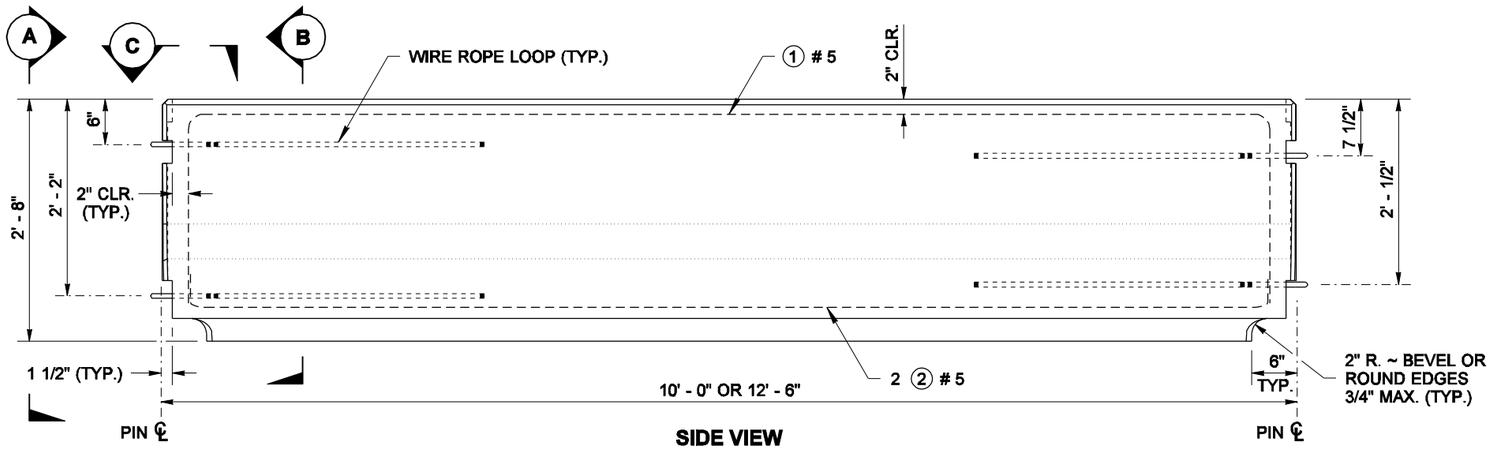

SIDE VIEW

BARRIER SECTION

NOTES

1. Wire rope loops shall be 3' - 8" long, except for the top loop of the Barrier Terminal, which shall be 2' - 0" long.
2. Except for the locations of the wire rope loops, the dimensions shown in END VIEW "A" are typical for both ends of a Barrier Section or opposing ends of Barrier Terminals.
3. Connecting and Drift Pin head designs vary among different manufacturers. Pin designs that are shaped differently than those shown in the detail are acceptable, if the bearing surface is within the minimum and maximum widths specified.
4. The vertical spacing of the Wire Rope Loops in a Barrier Terminal is determined by the end of the Barrier Segment to which it is being connected. See BARRIER CONNECTION DETAIL (Sheet 2).

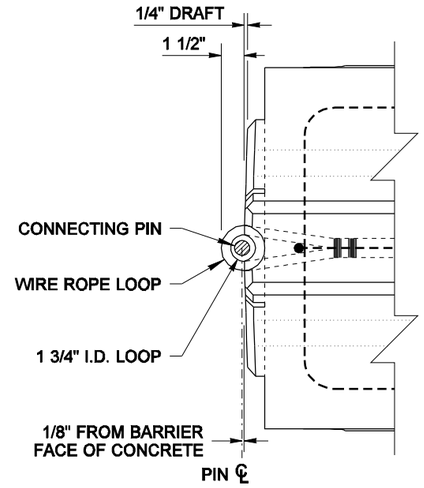

DETAIL C

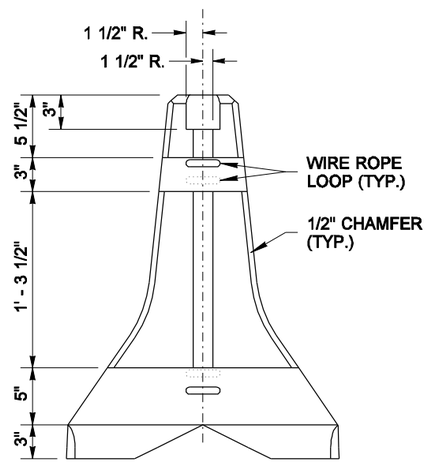

SEE NOTE 2

END VIEW A

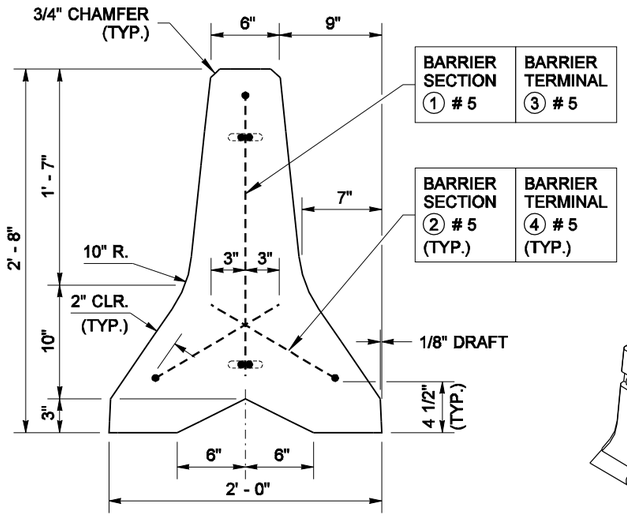

SECTION B

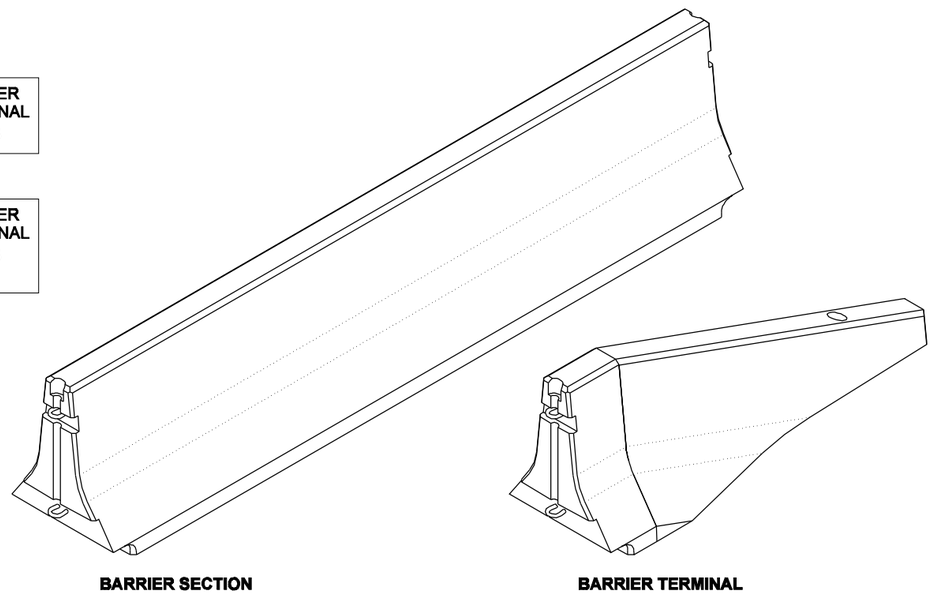

BARRIER SECTION **BARRIER TERMINAL**

ISOMETRIC VIEWS

RICHARD BARSTOW ALBIN
STATE OF WASHINGTON
34042
REGISTERED PROFESSIONAL ENGINEER

EXPIRES JULY 24, 2004

NOTE: THIS PLAN IS NOT A LEGAL ENGINEERING DOCUMENT BUT AN ELECTRONIC DUPLICATE. THE ORIGINAL, SIGNED BY THE ENGINEER, AND APPROVED FOR PUBLICATION, IS KEPT ON FILE AT THE WASHINGTON STATE DEPARTMENT OF TRANSPORTATION. A COPY MAY BE OBTAINED UPON REQUEST.

CONCRETE BARRIER TYPE 2

STANDARD PLAN C-8

SHEET 1 OF 2 SHEETS

APPROVED FOR PUBLICATION

Harold J. Peterfeso — STATE DESIGN ENGINEER — *04-27-04* — DATE

Washington State Department of Transportation

EFFECTIVE: APRIL 2, 2007 TO JANUARY 6, 2008

EFFECTIVE: APRIL 2, 2007 TO JANUARY 6, 2008

EFFECTIVE: APRIL 2, 2007 TO JANUARY 6, 2008

DRAWN BY: MARK SUJKA

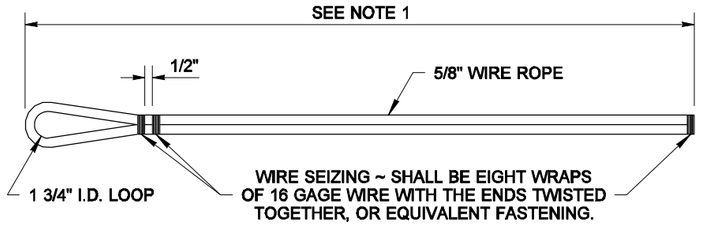

WIRE ROPE LOOP DETAIL

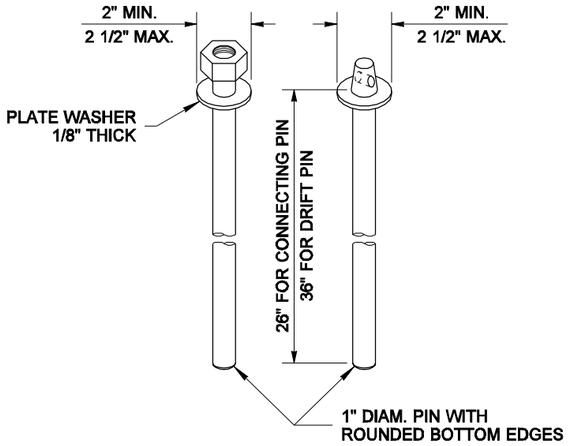

SEE NOTE 3

CONNECTING PINS AND DRIFT PINS

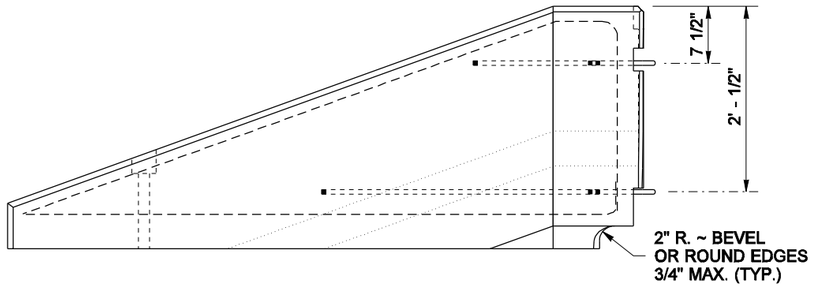

SIDE VIEW

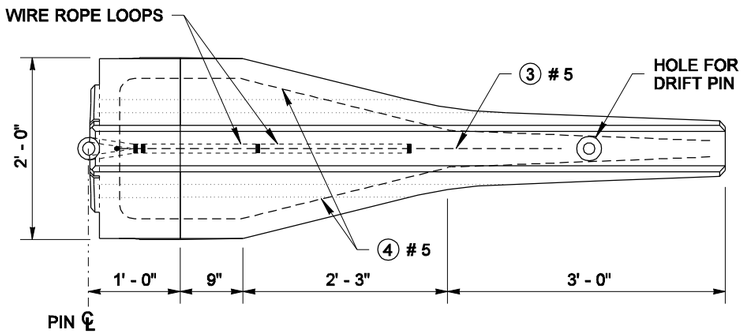

TOP VIEW

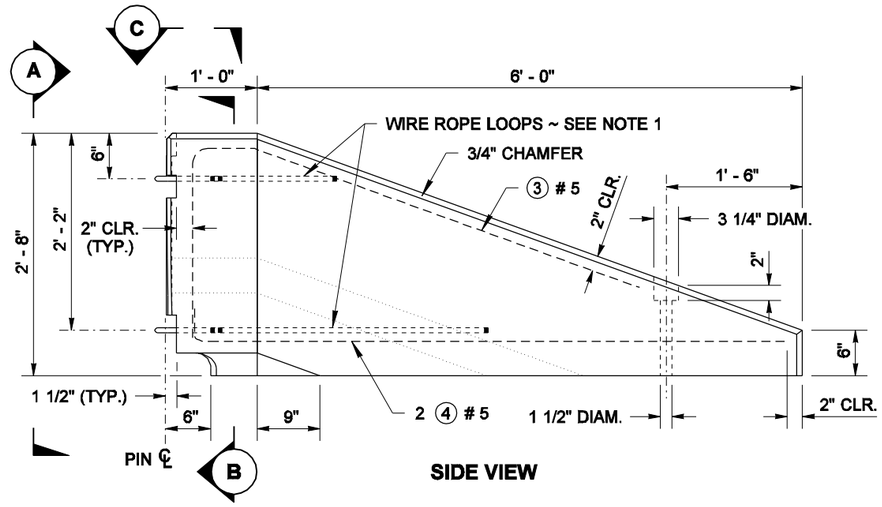

SIDE VIEW

SEE NOTE 4

BARRIER TERMINAL

BARRIER SECTION
REINFORCING STEEL BENDING DIAGRAM

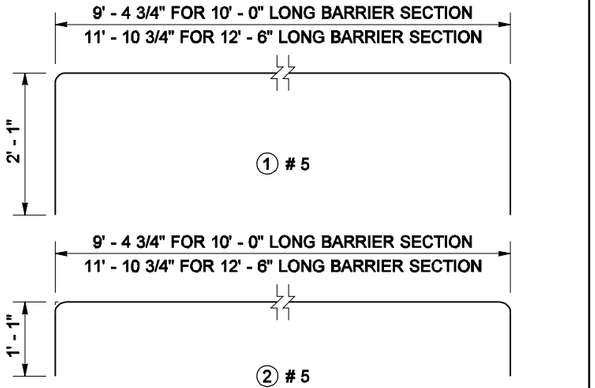

BARRIER TERMINAL
REINFORCING STEEL BENDING DIAGRAM

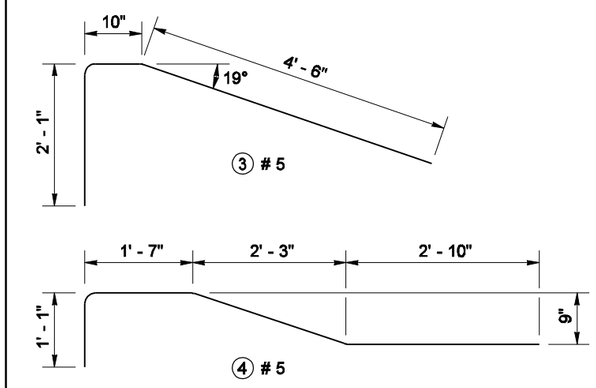

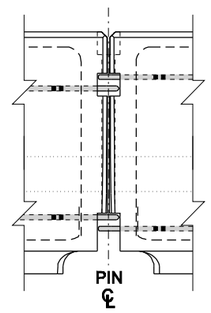

BARRIER CONNECTION DETAIL



EXPIRES JULY 24, 2004

NOTE: THIS PLAN IS NOT A LEGAL ENGINEERING DOCUMENT BUT AN ELECTRONIC DUPLICATE. THE ORIGINAL, SIGNED BY THE ENGINEER AND APPROVED FOR PUBLICATION, IS KEPT ON FILE AT THE WASHINGTON STATE DEPARTMENT OF TRANSPORTATION. A COPY MAY BE OBTAINED UPON REQUEST.

CONCRETE BARRIER TYPE 2

STANDARD PLAN C-8

SHEET 2 OF 2 SHEETS

APPROVED FOR PUBLICATION

Harold J. Peterfeso — STATE DESIGN ENGINEER — *04-27-04* — DATE

Washington State Department of Transportation

EFFECTIVE: APRIL 2, 2007 TO JANUARY 6, 2008

EFFECTIVE: APRIL 2, 2007 TO JANUARY 6, 2008

EFFECTIVE: APRIL 2, 2007 TO JANUARY 6, 2008

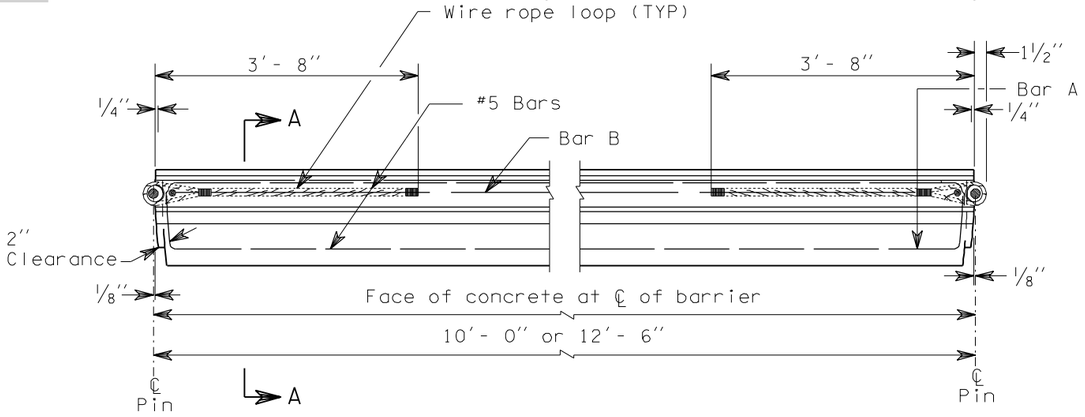

INTERMEDIATE PLAN

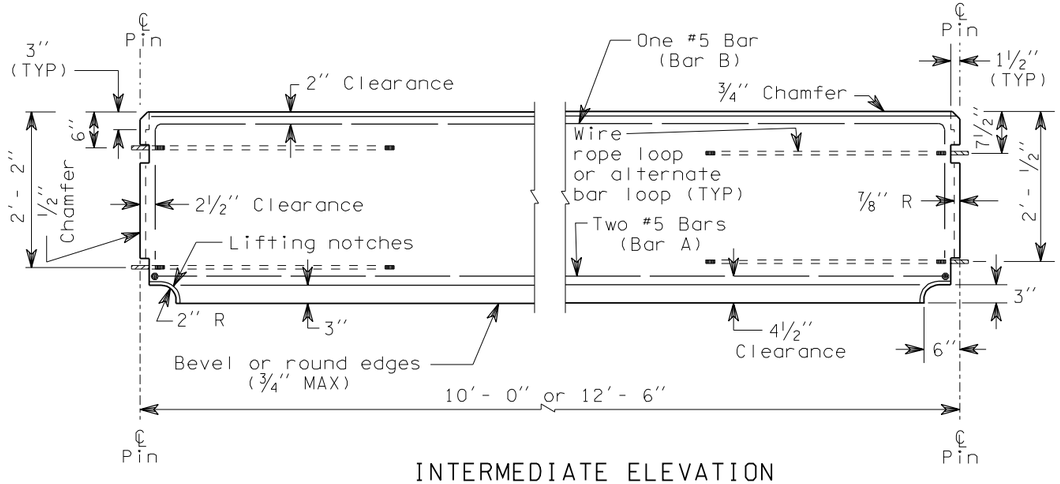

INTERMEDIATE ELEVATION

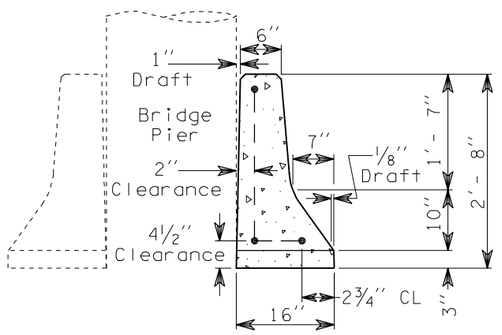

SECTION A-A
TYPE 4

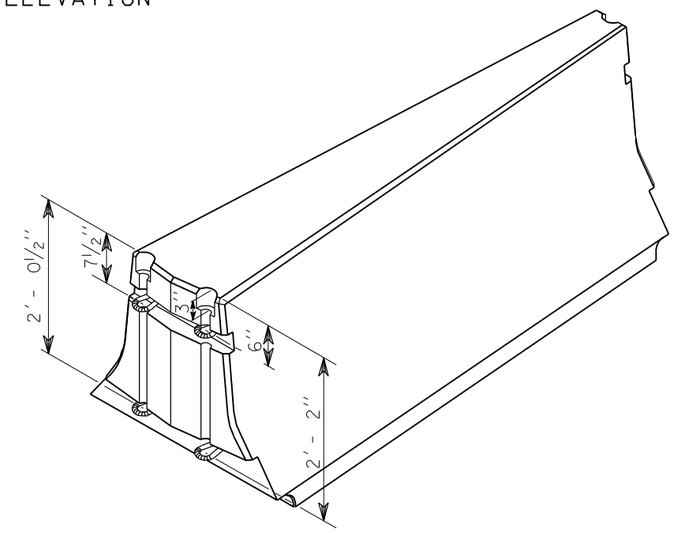

TRANSITION END VIEW

EFFECTIVE: APRIL 2, 2007 TO JANUARY 6, 2008

EFFECTIVE: APRIL 2, 2007 TO JANUARY 6, 2008

NOTE

1. For details on wire rope loop, connecting pin and end notches see Standard Plan "Concrete Barrier Type 2."

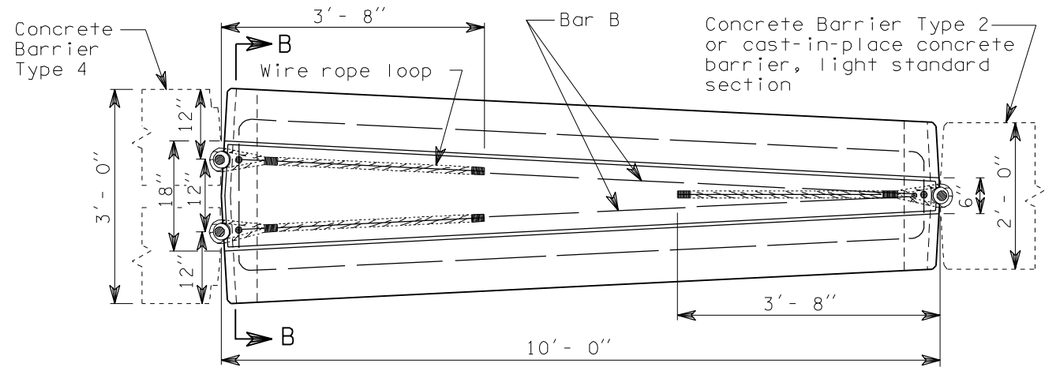

TRANSITION PLAN

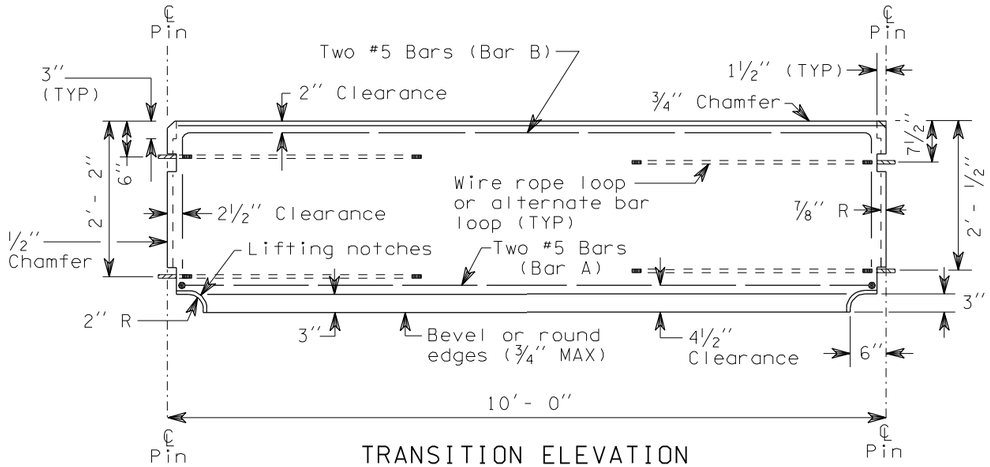

TRANSITION ELEVATION

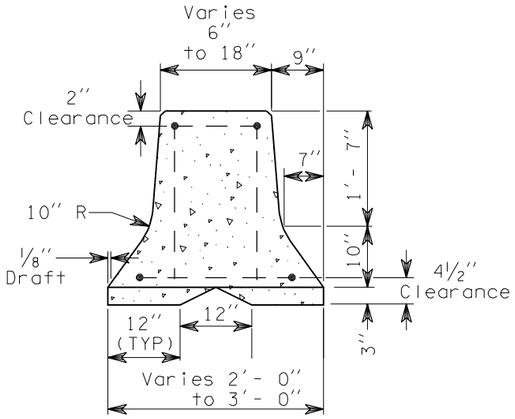

SECTION B-B
TRANSITION SECTION

CONCRETE BARRIER TYPE 4 AND TRANSITION SECTION

CLIFFORD E. MANSFIELD
STATE OF WASHINGTON
15224
REGISTERED
PROFESSIONAL ENGINEER
EXPIRES MAY 3, 1998

NOTE: THIS PLAN IS NOT A LEGAL ENGINEERING DOCUMENT BUT AN ELECTRONIC DUPLICATE. THE ORIGINAL, SIGNED BY THE ENGINEER AND APPROVED FOR PUBLICATION, IS KEPT ON FILE AT THE WASHINGTON STATE DEPARTMENT OF TRANSPORTATION. A COPY MAY BE OBTAINED UPON REQUEST.

STANDARD PLAN C-8a

APPROVED FOR PUBLICATION

Donald K. Nelson — 07/25/97
STATE DESIGN ENGINEER — DATE

WASHINGTON STATE DEPARTMENT OF TRANSPORTATION
OLYMPIA, WASHINGTON

EFFECTIVE: APRIL 2, 2007 TO JANUARY 6, 2008

EFFECTIVE: APRIL 2, 2007 TO JANUARY 6, 2008

EFFECTIVE: APRIL 2, 2007 TO JANUARY 6, 2008

EFFECTIVE: APRIL 2, 2007 TO JANUARY 6, 2008

DRAWN BY: BILL BERENS

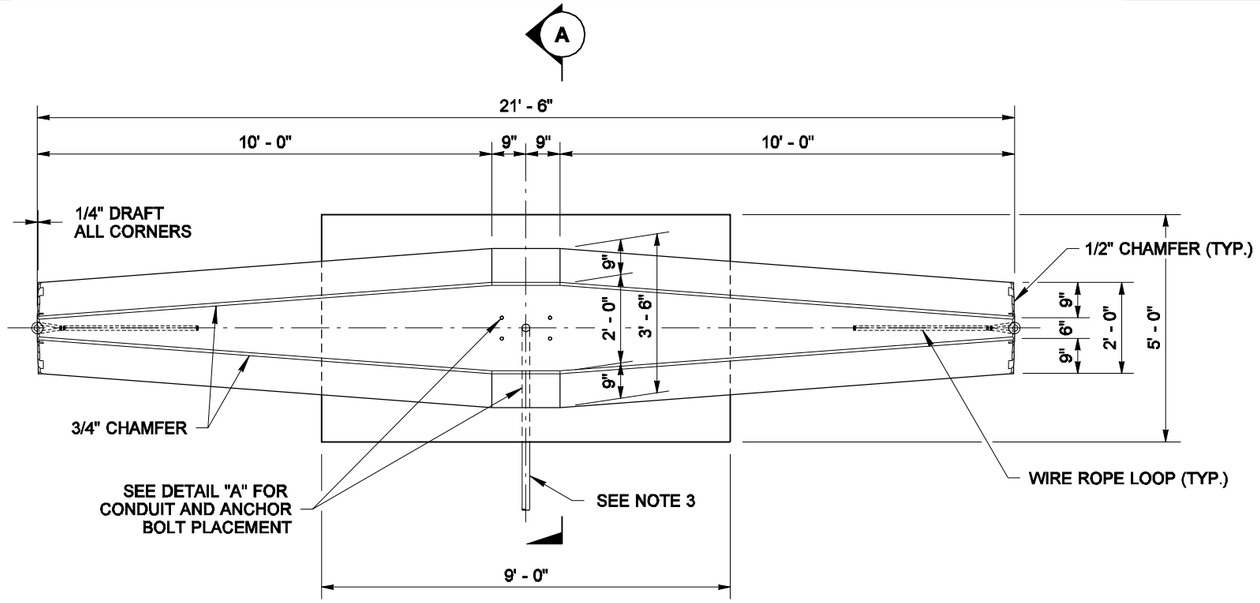

PLAN

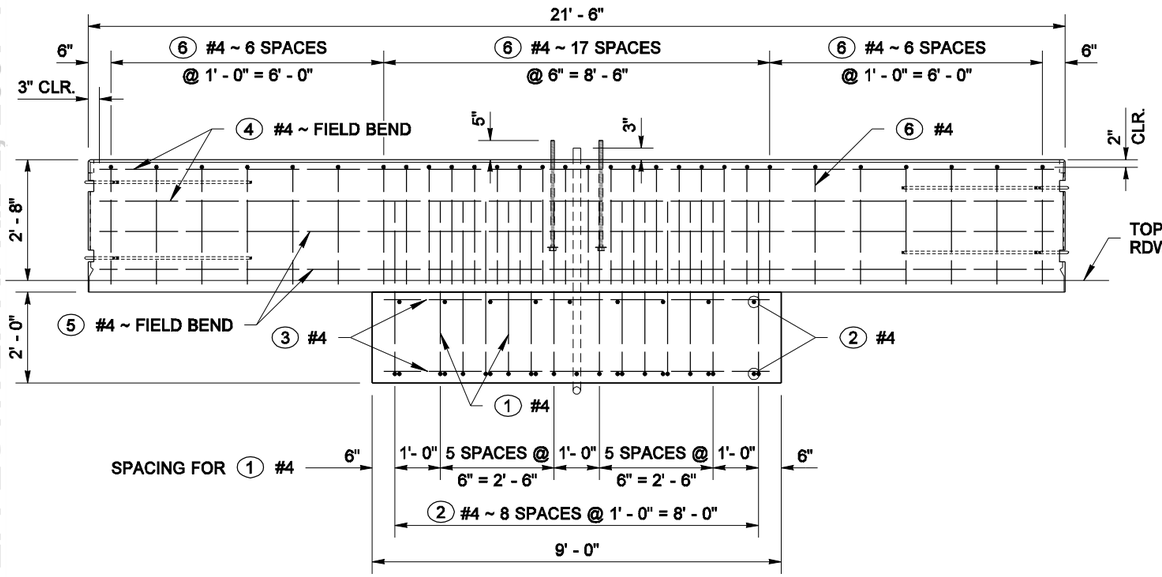

ELEVATION

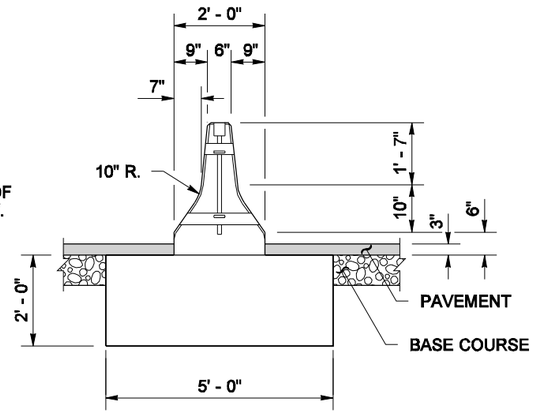

END

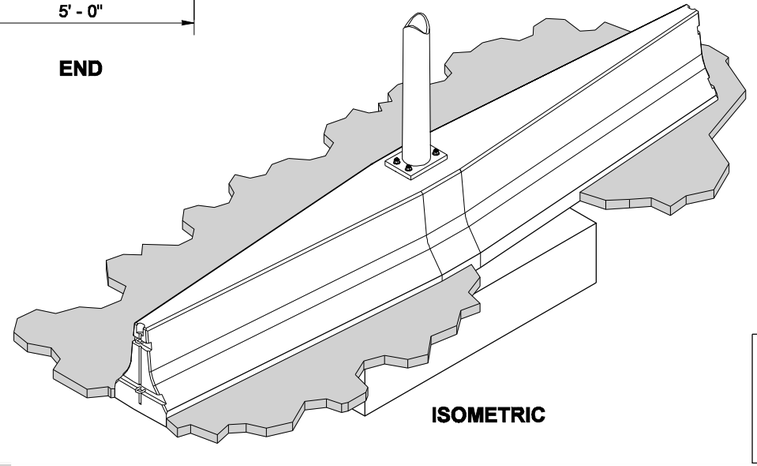

ISOMETRIC

NOTES

1. This plan shall be used for 40' and 50' Light Standards with 16' max. length double mast arms.
2. See Standard Plan C-8 for details on barrier ends, Wire Rope Loops, and Connecting Pins.
3. See the Contract Plans for conduit placement.
4. Concrete shall be Class 4000.

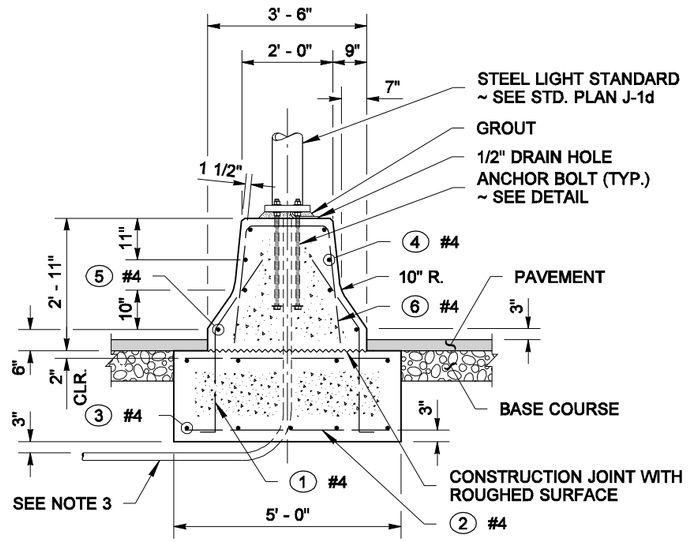

SECTION (A)

RICHARD P. ZELDENRUST
STATE OF WASHINGTON
25470
REGISTERED
PROFESSIONAL ENGINEER

EXPIRES NOVEMBER 14, 2006

NOTE: THIS PLAN IS NOT A LEGAL ENGINEERING DOCUMENT BUT AN ELECTRONIC DUPLICATE. THE ORIGINAL, SIGNED BY THE ENGINEER AND APPROVED FOR PUBLICATION, IS KEPT ON FILE AT THE WASHINGTON STATE DEPARTMENT OF TRANSPORTATION. A COPY MAY BE OBTAINED UPON REQUEST.

CONCRETE BARRIER LIGHT STANDARD SECTION

STANDARD PLAN C-8b

SHEET 1 OF 2 SHEETS

APPROVED FOR PUBLICATION

Harold J. Peterfeso — STATE DESIGN ENGINEER

01-11-06 — DATE

Washington State Department of Transportation

EFFECTIVE: APRIL 2, 2007 TO JANUARY 6, 2008

EFFECTIVE: APRIL 2, 2007 TO JANUARY 6, 2008

EFFECTIVE: APRIL 2, 2007 TO JANUARY 6, 2008

EFFECTIVE: APRIL 2, 2007 TO JANUARY 6, 2008

DRAWN BY: BILL BERENS

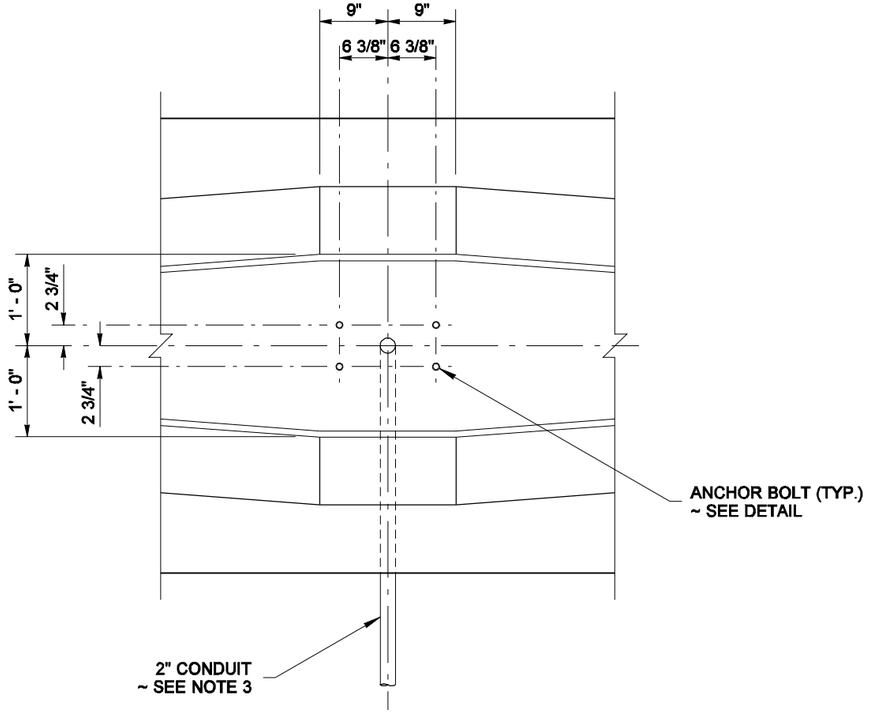

DETAIL "A"

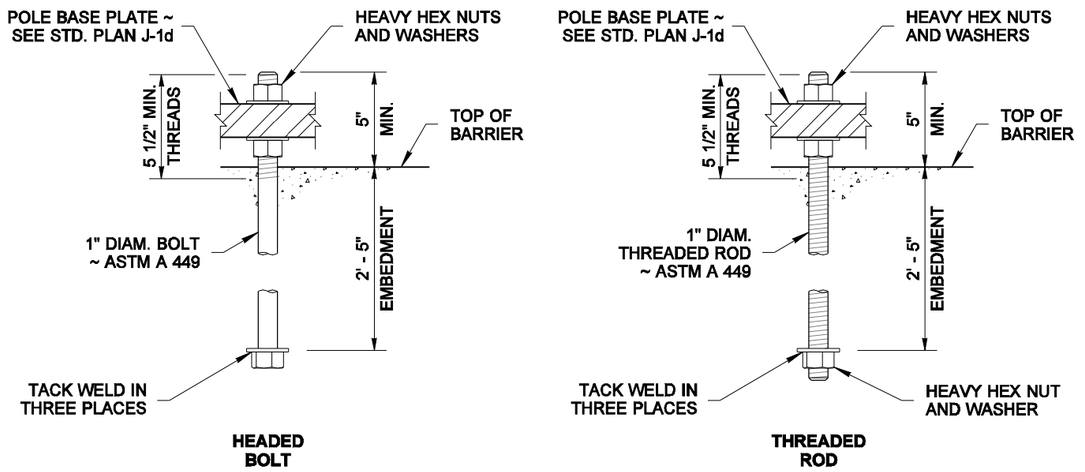

ANCHOR BOLT DETAIL

GALVANIZE EXPOSED ANCHOR ROD END 1' - 0" MIN.

BAR LIST					BENDING DIAGRAM
MARK	LOCATION	QTY.	SIZE	LENGTH	(ALL DIMENSIONS ARE OUT TO OUT)
①	FOOTING - DOWEL	28	#4	4' - 3"	
②	FOOTING	18		4' - 8"	
③	FOOTING	9		8' - 8"	
④	BARRIER	4		21' - 0"	
⑤	BARRIER	4		21' - 0"	
⑥	BARRIER	30		5' - 3" TO 6' - 9"	

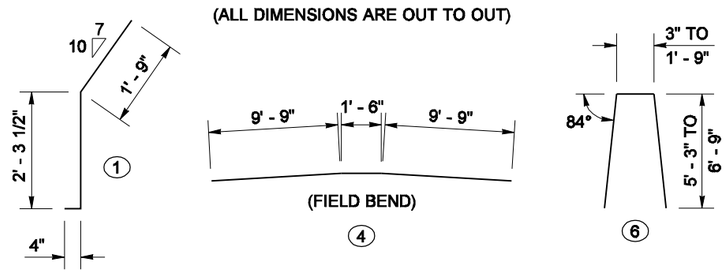



EXPIRES NOVEMBER 14, 2006

NOTE: THIS PLAN IS NOT A LEGAL ENGINEERING DOCUMENT BUT AN ELECTRONIC DUPLICATE. THE ORIGINAL, SIGNED BY THE ENGINEER AND APPROVED FOR PUBLICATION, IS KEPT ON FILE AT THE WASHINGTON STATE DEPARTMENT OF TRANSPORTATION. A COPY MAY BE OBTAINED UPON REQUEST.

CONCRETE BARRIER LIGHT STANDARD SECTION

STANDARD PLAN C-8b

SHEET 2 OF 2 SHEETS

APPROVED FOR PUBLICATION

Harold J. Peterfeso — STATE DESIGN ENGINEER — *01-11-06* — DATE

Washington State Department of Transportation

EFFECTIVE: APRIL 2, 2007 TO JANUARY 6, 2008

EFFECTIVE: APRIL 2, 2007 TO JANUARY 6, 2008

EFFECTIVE: APRIL 2, 2007 TO JANUARY 6, 2008

DRAWN BY: MARK SUJKA

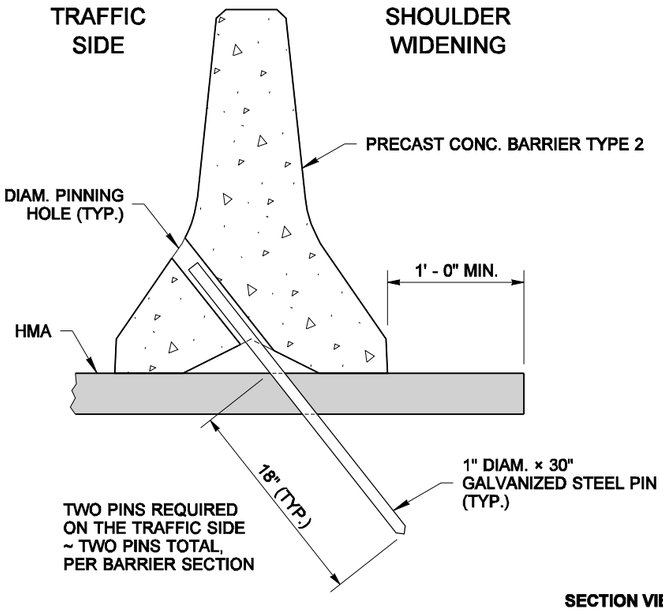

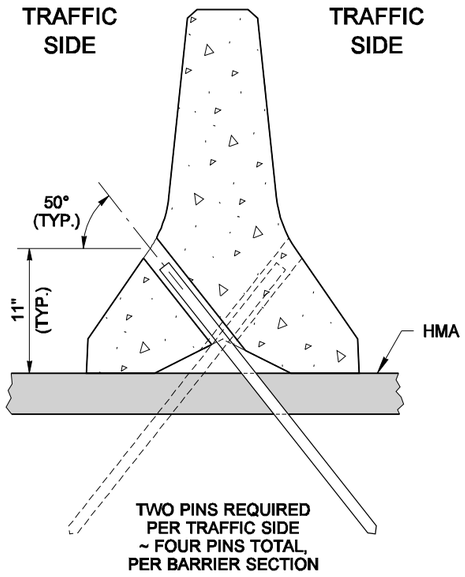

SECTION VIEWS

TYPE 3 ANCHOR
PIN LOCATIONS

NOTES

1. The intended use of this plan is for the permanent anchoring of Precast Concrete Barrier Type 2 (see Standard Plan C-8) on hot mix asphalt pavement.
2. Remove the Type 3 Anchors by first driving the steel pins down through the barrier further into the pavement to allow lifting the barrier without interference, then remove the pins from the pavement.
3. After removing the Type 3 Anchors, clean the pin holes and fill them with sealant according to Standard Specification 9-04.2.

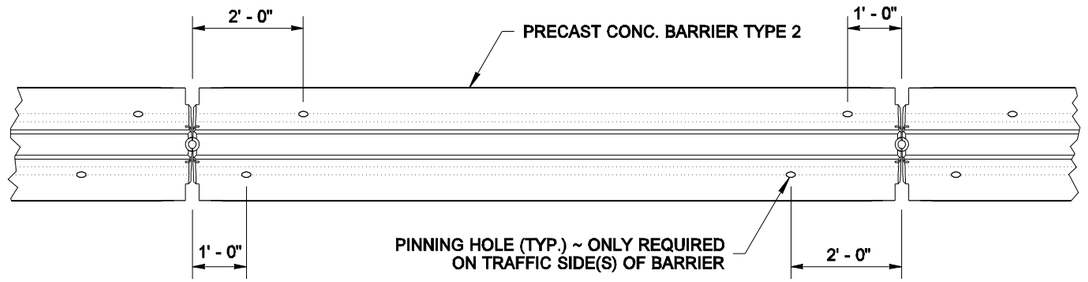

PLAN VIEW

TYPE 3 ANCHOR
PIN LOCATIONS

RICHARD BARSTOW ALBIN
STATE OF WASHINGTON
34042
REGISTERED
PROFESSIONAL ENGINEER

EXPIRES JULY 24, 2008

NOTE: THIS PLAN IS NOT A LEGAL ENGINEERING DOCUMENT BUT AN ELECTRONIC DUPLICATE. THE ORIGINAL, SIGNED BY THE ENGINEER AND APPROVED FOR PUBLICATION, IS KEPT ON FILE AT THE WASHINGTON STATE DEPARTMENT OF TRANSPORTATION. A COPY MAY BE OBTAINED UPON REQUEST.

PRECAST CONC. BARRIER ANCHOR ~ TYPE 3 (PERMANENT) STANDARD PLAN C-8e

SHEET 1 OF 1 SHEET

APPROVED FOR PUBLICATION

Ken L. Smith — STATE DESIGN ENGINEER — *02-21-07* — DATE

Washington State Department of Transportation

DATE	REVISION	BY
02/2007	REMOVED TEMPORARY ANCHORS	MAS

EFFECTIVE: APRIL 2, 2007 TO JANUARY 6, 2008

EFFECTIVE: APRIL 2, 2007 TO JANUARY 6, 2008

EFFECTIVE: APRIL 2, 2007 TO JANUARY 6, 2008

EFFECTIVE: APRIL 2, 2007 TO JANUARY 6, 2008

EFFECTIVE: APRIL 2, 2007 TO JANUARY 6, 2008

DRAWN BY: MARK SUJKA

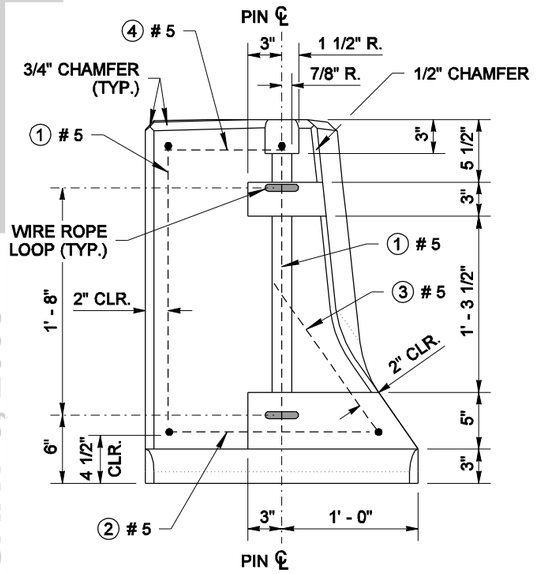

CONCRETE BARRIER TYPE 2 (NJ-SHAPE)

END VIEW

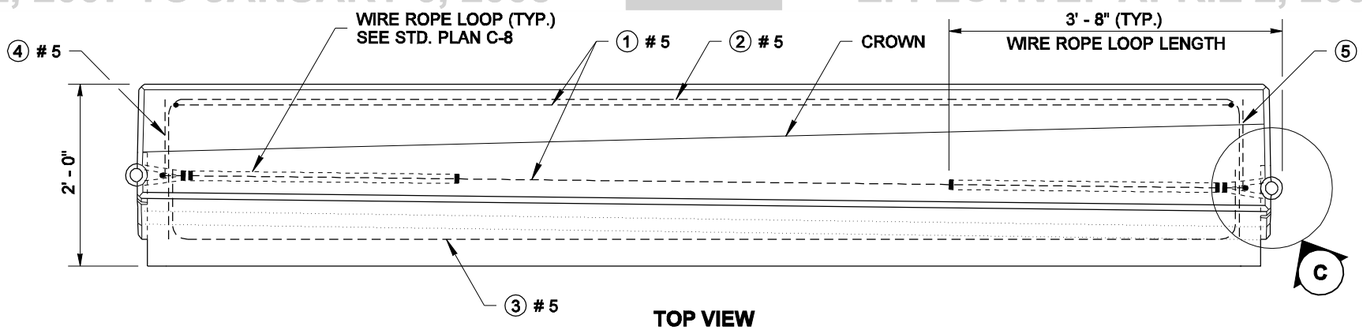

TOP VIEW

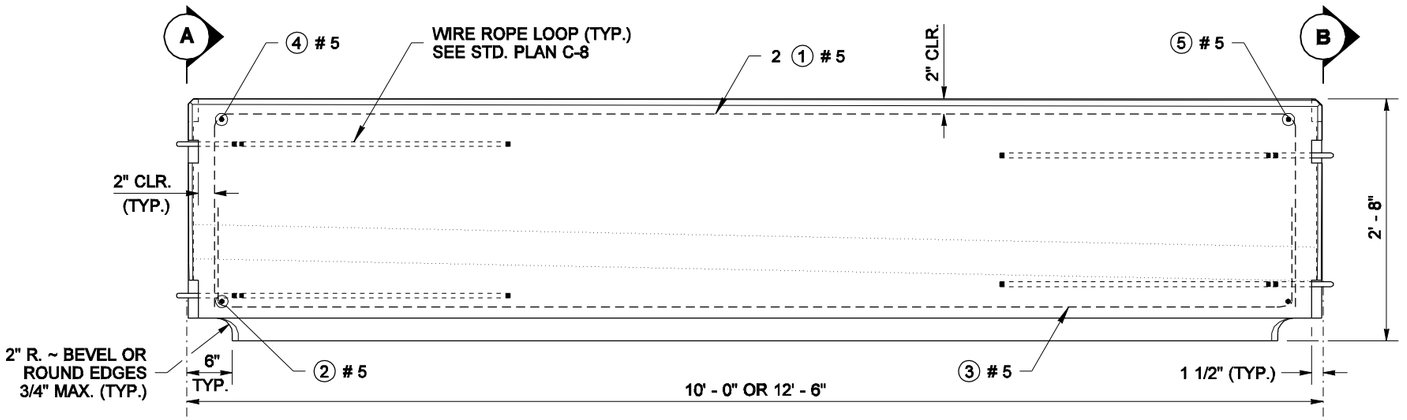

TRAFFIC-SIDE VIEW

TRANSITION SECTION

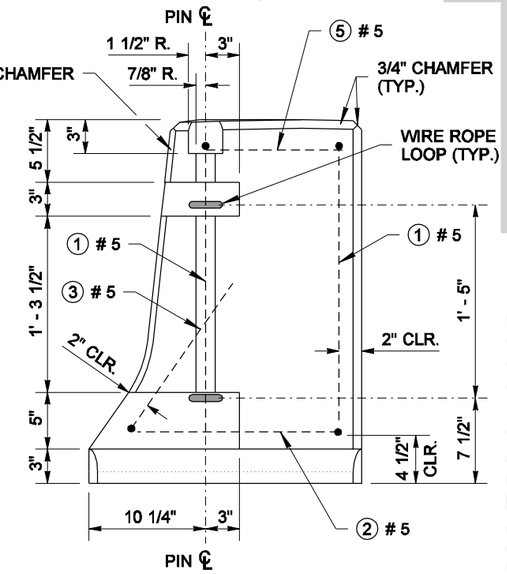

BRIDGE F-SHAPE TRAFFIC BARRIER

END VIEW

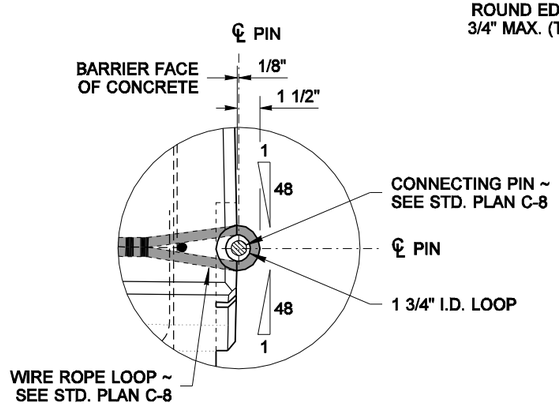

TYPICAL ~ BOTH ENDS

DETAIL (C)

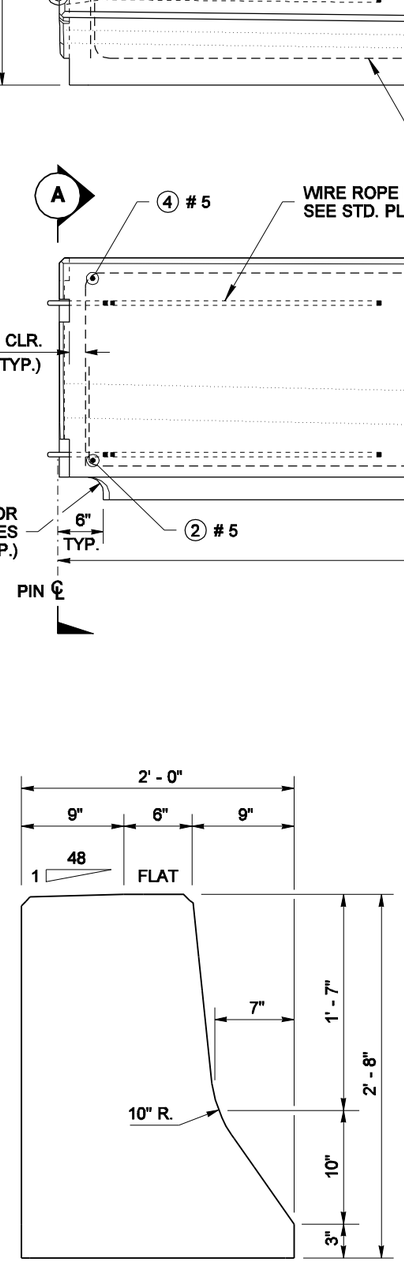

CONCRETE BARRIER TYPE 2 (NJ-SHAPE)

SECTION (A)

(SHOWN AT LIMIT OF TRANSITION)

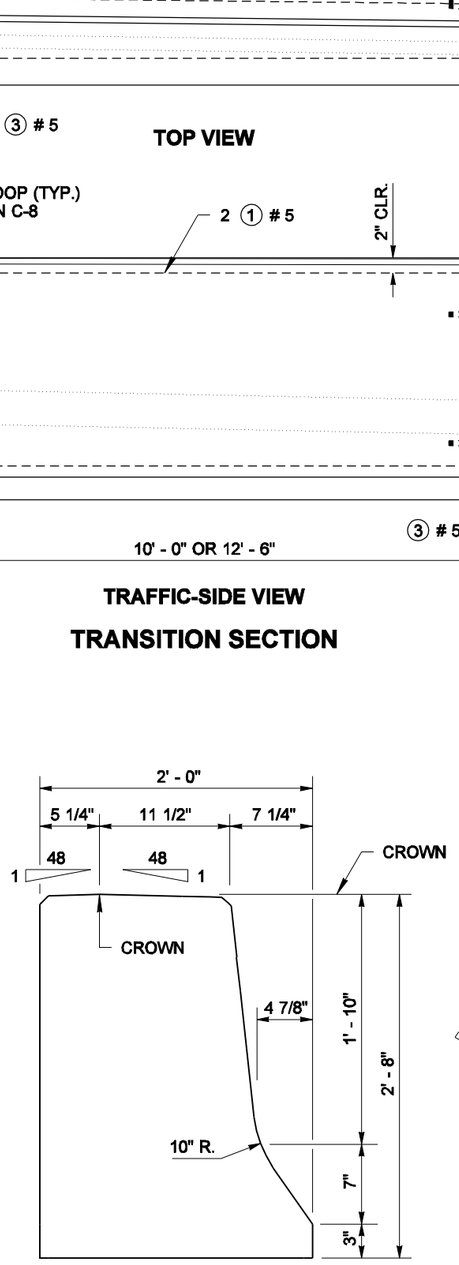

BRIDGE F-SHAPE TRAFFIC BARRIER

SECTION (B)

(SHOWN AT LIMIT OF TRANSITION)

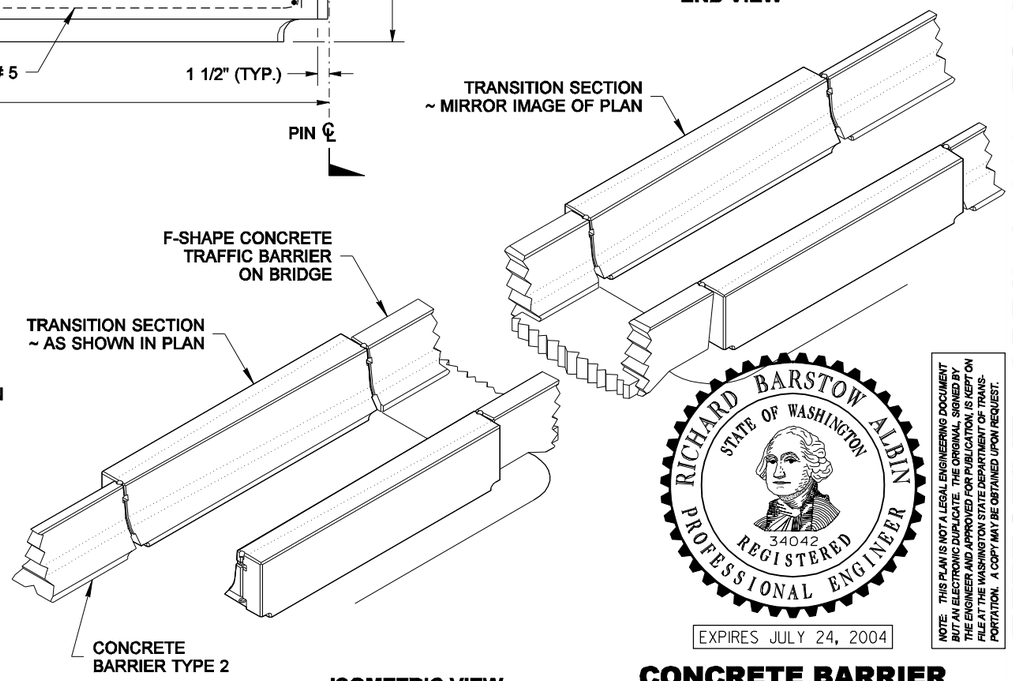

ISOMETRIC VIEW

REINFORCING STEEL BENDING DIAGRAM

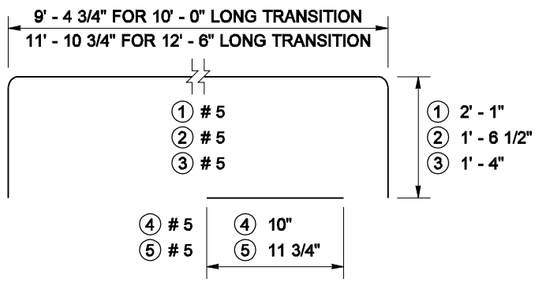

NOTE

The vertical locations of the Wire Rope Loops at one end compose a set that shall not vary; however, which set is applied to an end is determined by the end to which it is being connected. A set with loops 1' - 5" apart connects to a set with loops 1' - 8" apart. See Standard Plan C-8, BARRIER CONNECTION DETAIL.

RICHARD BARSTOW ALBIN
STATE OF WASHINGTON
34042
REGISTERED
PROFESSIONAL ENGINEER

EXPIRES JULY 24, 2004

NOTE: THIS PLAN IS NOT A LEGAL ENGINEERING DOCUMENT BUT AN ELECTRONIC DUPLICATE. THE ORIGINAL, SIGNED BY THE ENGINEER AND APPROVED FOR PUBLICATION, IS KEPT ON FILE AT THE WASHINGTON STATE DEPARTMENT OF TRANSPORTATION. A COPY MAY BE OBTAINED UPON REQUEST.

CONCRETE BARRIER TRANSITION TYPE 2 TO BRIDGE F-SHAPE STANDARD PLAN C-8f

SHEET 1 OF 1 SHEET

APPROVED FOR PUBLICATION

Harold J. Peterfeso — STATE DESIGN ENGINEER — *06-30-04* — DATE

Washington State Department of Transportation

EFFECTIVE: APRIL 2, 2007 TO JANUARY 6, 2008

EFFECTIVE: APRIL 2, 2007 TO JANUARY 6, 2008

EFFECTIVE: APRIL 2, 2007 TO JANUARY 6, 2008

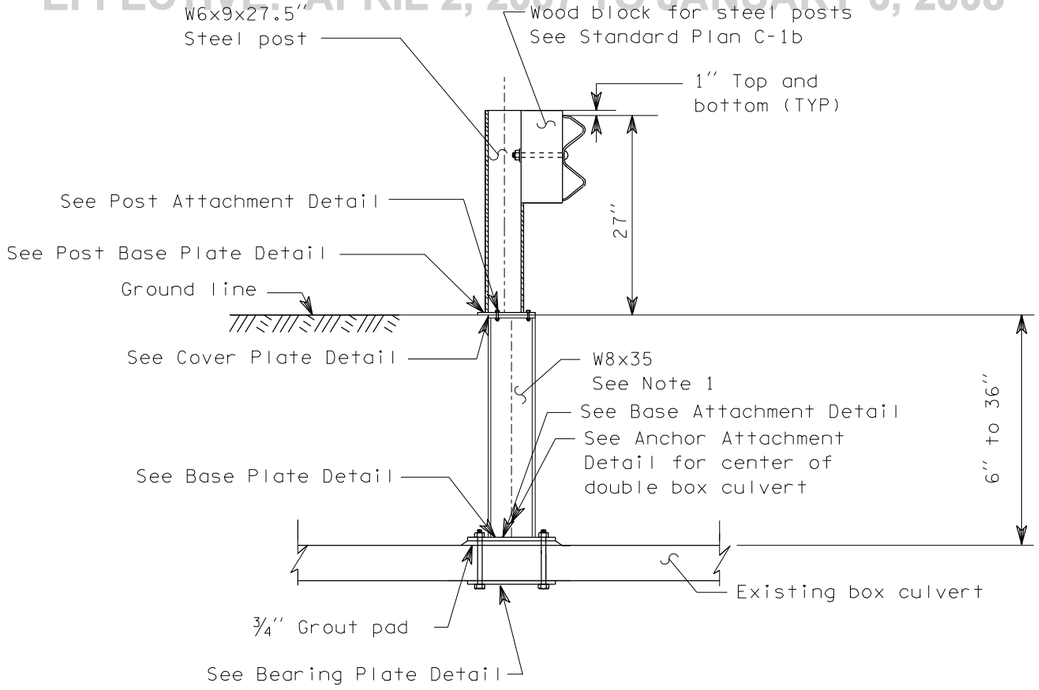

BOX CULVERT GUARDRAIL STEEL POST TYPE 1
(6″ to 36″ ground cover)

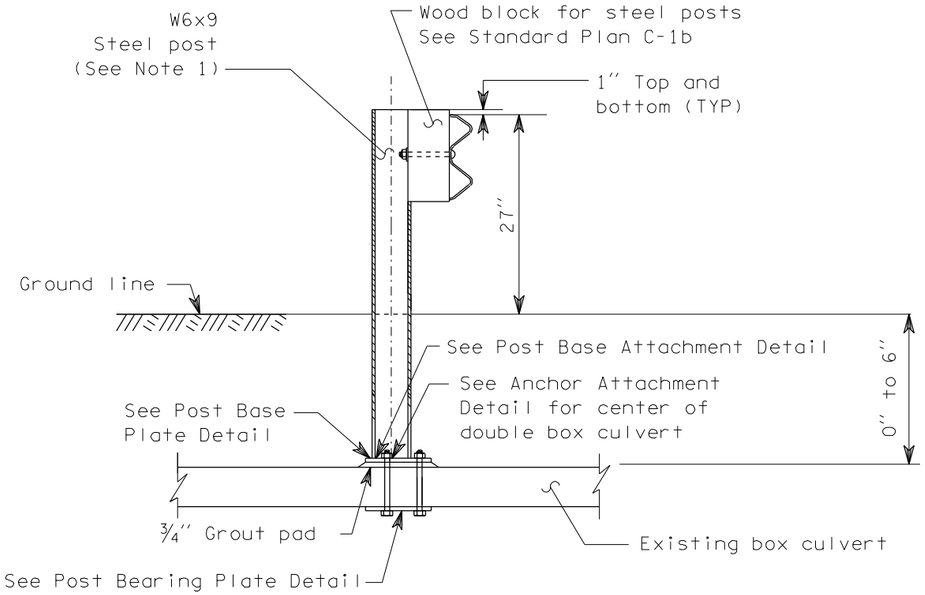

BOX CULVERT GUARDRAIL STEEL POST TYPE 2
(0″ to 6″ Ground cover)

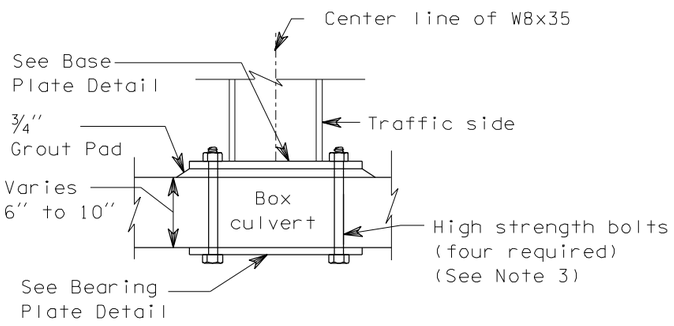

BASE ATTACHMENT DETAIL

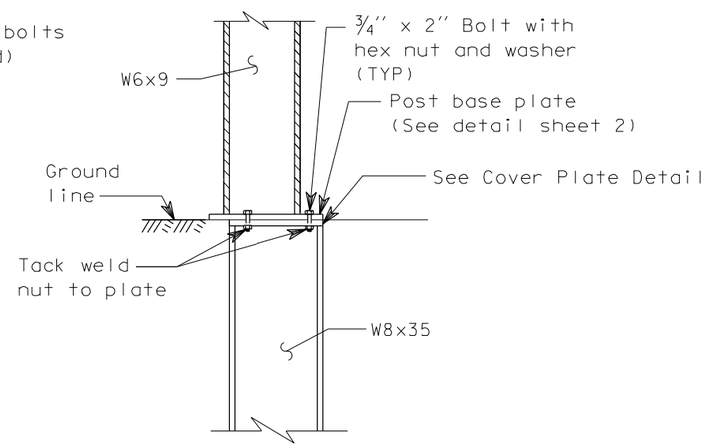

POST ATTACHMENT DETAIL

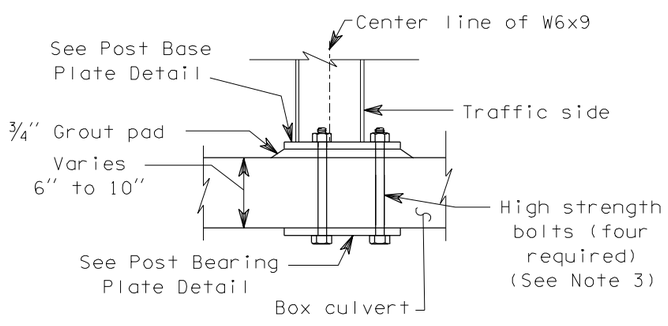

POST BASE ATTACHMENT DETAIL



EXPIRES MAY 3, 2000

NOTE: THIS PLAN IS NOT A LEGAL ENGINEERING DOCUMENT BUT AN ELECTRONIC DUPLICATE. THE ORIGINAL, SIGNED BY THE ENGINEER AND APPROVED FOR PUBLICATION, IS KEPT ON FILE AT THE WASHINGTON STATE DEPARTMENT OF TRANSPORTATION. A COPY MAY BE OBTAINED UPON REQUEST.

BOX CULVERT GUARDRAIL STEEL POST
STANDARD PLAN C-10

SHEET 1 OF 2 SHEETS

APPROVED FOR PUBLICATION

Clifford E. Mansfield — 07/31/98
DEPUTY STATE DESIGN ENGINEER — DATE

WASHINGTON STATE DEPARTMENT OF TRANSPORTATION
OLYMPIA, WASHINGTON

DATE	REVISION	BY
6/98	Added wood block for steel posts.	RBA

EFFECTIVE: APRIL 2, 2007 TO JANUARY 6, 2008

EFFECTIVE: APRIL 2, 2007 TO JANUARY 6, 2008

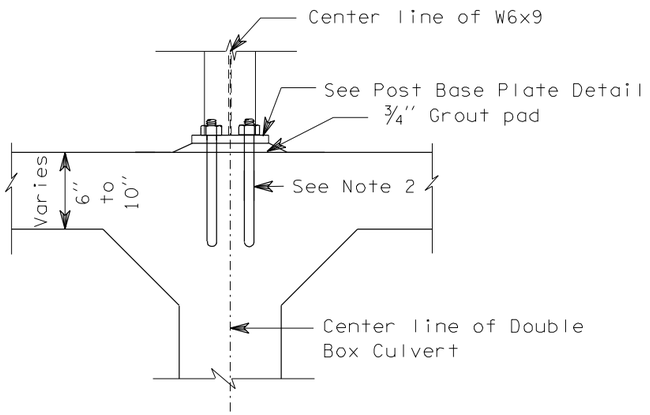

POST ANCHOR ATTACHMENT DETAIL
(See Note 4)

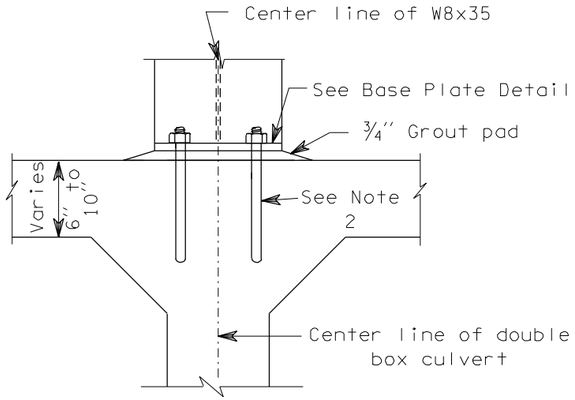

ANCHOR ATTACHMENT DETAIL
(See Note 4)

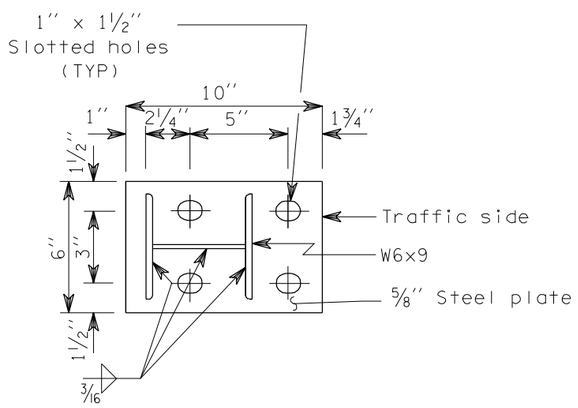

POST BASE PLATE DETAIL

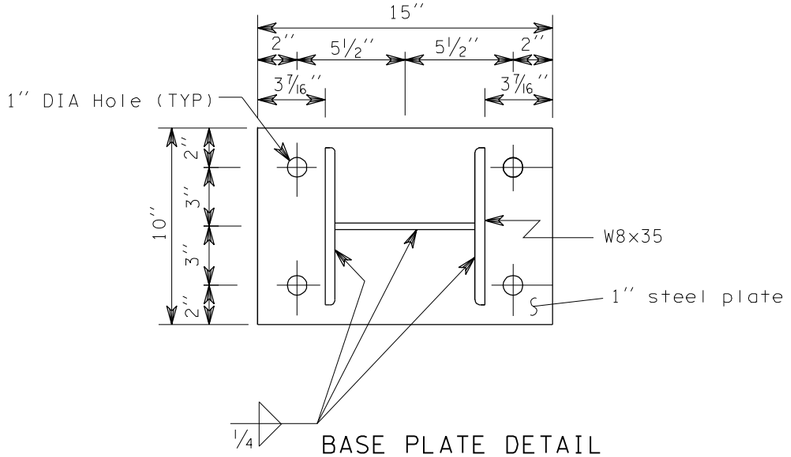

BASE PLATE DETAIL

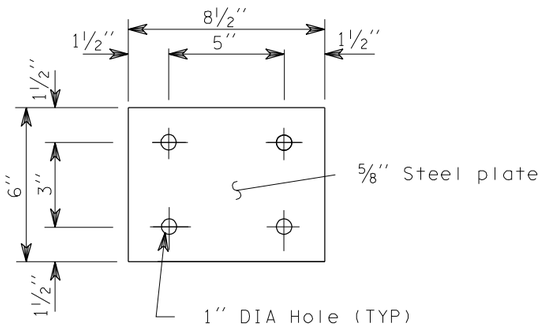

POST BEARING PLATE DETAIL

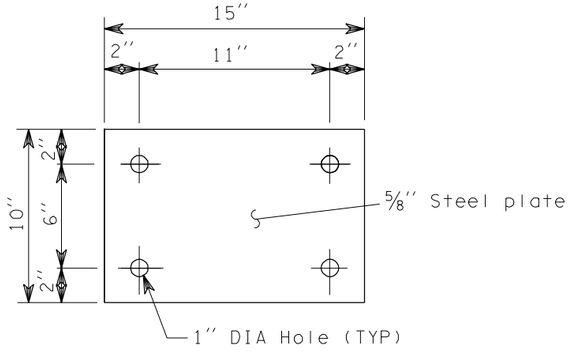

BEARING PLATE DETAIL

NOTES

1. Length of W8x35 and W6x9 shall be determined by measurement from top of ground to top of grout pad. This distance shall be verified by the contractor.
2. Attach guardrail post to box culvert with ¾'' high strength bolts with resin bonded anchors.
3. Drill 1¼'' diameter hole in concrete slab for ⅞'' high strength bolts. Length of bolt is determined by top slab of box culvert thickness which shall be verified by the contractor.
4. For details of post attachment to double box culvert see Standard Plan "Guardrail Placement," Case 15.

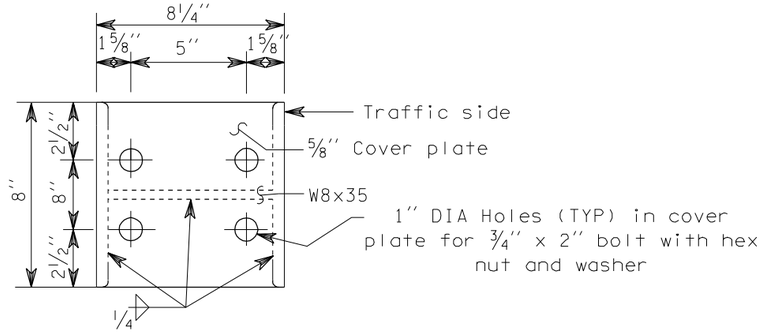

COVER PLATE DETAIL

CLIFFORD E. MANSFIELD
STATE OF WASHINGTON
15224
REGISTERED
PROFESSIONAL ENGINEER

EXPIRES MAY 3, 2000

NOTE: THIS PLAN IS NOT A LEGAL ENGINEERING DOCUMENT BUT AN ELECTRONIC DUPLICATE. THE ORIGINAL, SIGNED BY THE ENGINEER AND DATED, IS STORED IN THE ELECTRONIC FILES OF THE WASHINGTON STATE DEPARTMENT OF TRANSPORTATION. A COPY MAY BE OBTAINED UPON REQUEST.

BOX CULVERT GUARDRAIL STEEL POST STANDARD PLAN C-10

SHEET 2 OF 2 SHEETS

APPROVED FOR PUBLICATION

Clifford E. Mansfield *07/31/98*

DEPUTY STATE DESIGN ENGINEER — DATE

WASHINGTON STATE DEPARTMENT OF TRANSPORTATION
OLYMPIA, WASHINGTON

EFFECTIVE: APRIL 2, 2007 TO JANUARY 6, 2008

EFFECTIVE: APRIL 2, 2007 TO JANUARY 6, 2008

DRAWN BY: MARK SUJKA

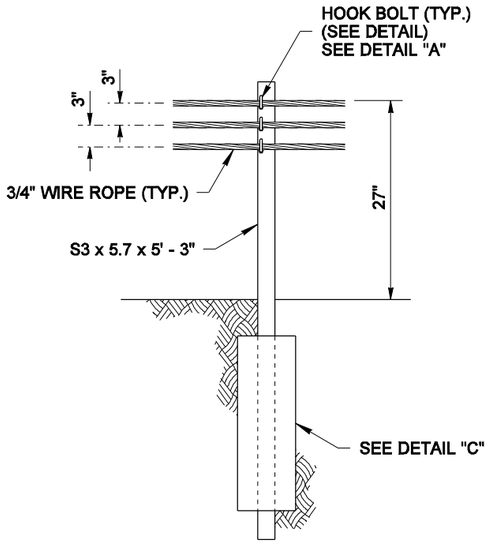

CABLE BARRIER TYPE 1

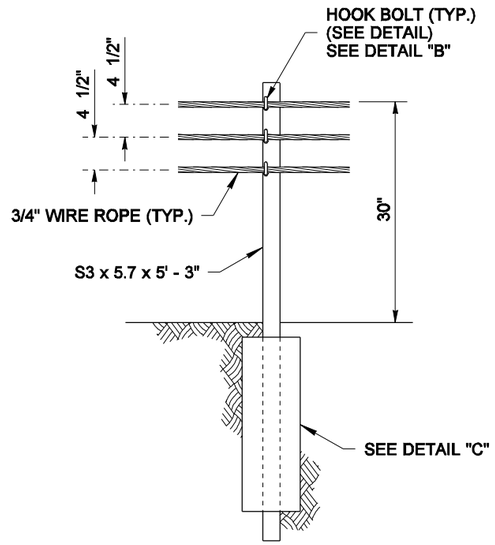

CABLE BARRIER TYPE 2

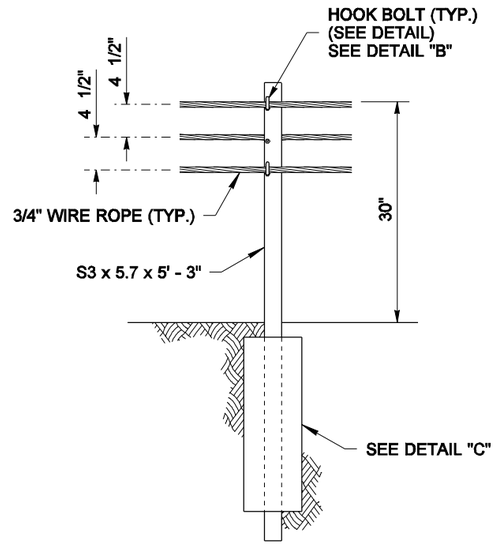

CABLE BARRIER TYPE 3

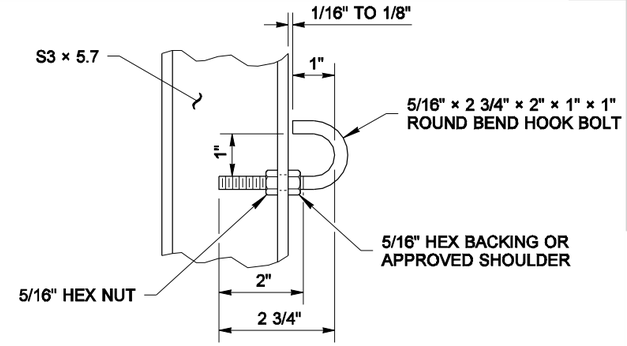

HOOK BOLT DETAIL

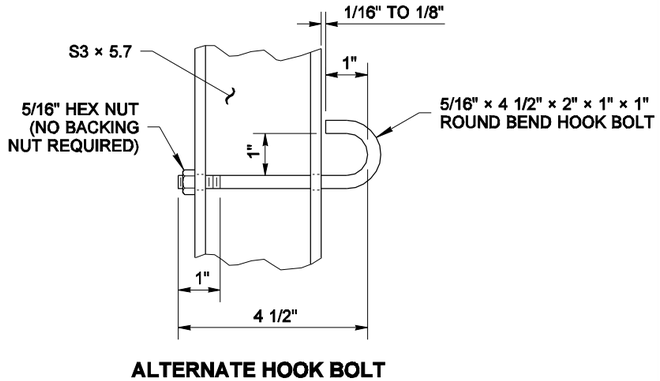

ALTERNATE HOOK BOLT DETAIL

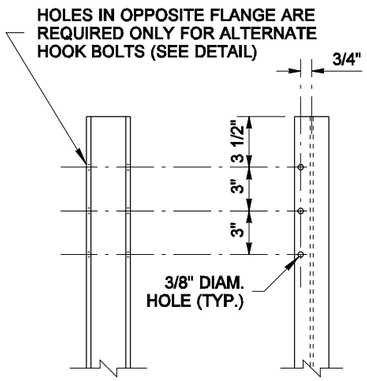

DETAIL "A"

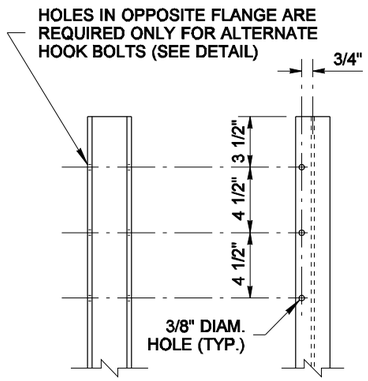

DETAIL "B"

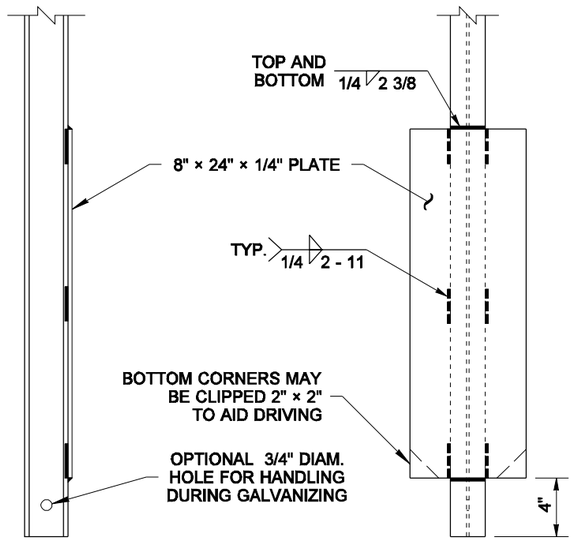

DETAIL "C"

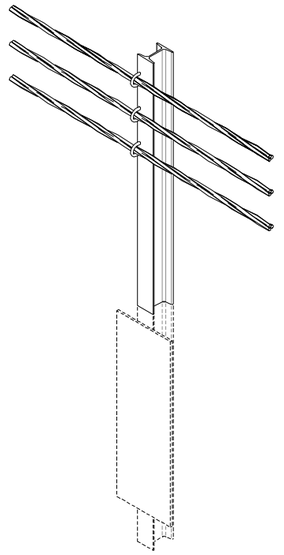

ISOMETRIC VIEW

DATE	REVISION	BY
12/2003	REVISEDED DETAILS "A" & "B", REMOVED DIM. FROM GROUNDLINE TO TOP OF PLATE	MS

RICHARD BARSTOW ALBIN
STATE OF WASHINGTON
34042
REGISTERED
PROFESSIONAL ENGINEER

EXPIRES JULY 24, 2004

NOTE: THIS PLAN IS NOT A LEGAL ENGINEERING DOCUMENT BUT AN ELECTRONIC DUPLICATE. THE ORIGINAL, SIGNED BY THE ENGINEER AND APPROVED FOR PUBLICATION, IS KEPT ON FILE AT THE WASHINGTON STATE DEPARTMENT OF TRANSPORTATION. A COPY MAY BE OBTAINED UPON REQUEST.

CABLE BARRIER

STANDARD PLAN C-11

SHEET 1 OF 1 SHEET

APPROVED FOR PUBLICATION

Harold J. Peterfeso — STATE DESIGN ENGINEER — *05-20-04* — DATE

Washington State Department of Transportation

EFFECTIVE: APRIL 2, 2007 TO JANUARY 6, 2008

EFFECTIVE: APRIL 2, 2007 TO JANUARY 6, 2008

DRAWN BY: MARK SUJKA

TABLE	
CURVE RADIUS	**POST SPACING**
LESS THAN 110'	USE NOT RECOMMENDED
110' TO 219'	6'
220' TO 699'	12'
700' OR MORE AND TANGENT SECTIONS	16'

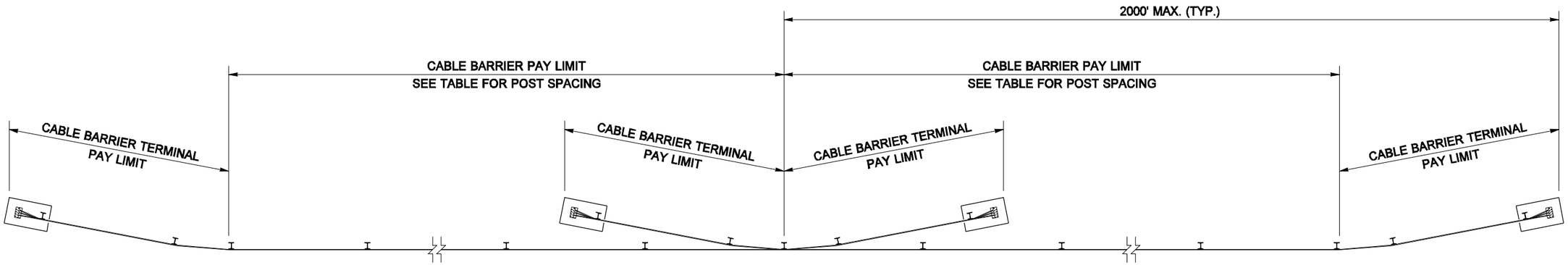

(MEASURE ALONG FACE OF CABLE BARRIER)

PLAN VIEW

CABLE BARRIER PLACEMENT

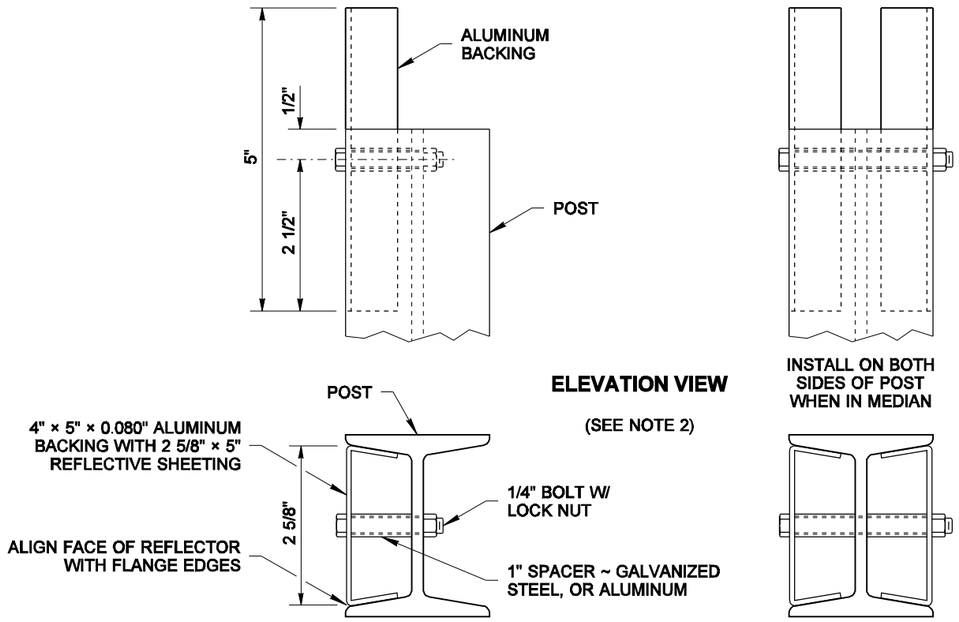

ELEVATION VIEW

(SEE NOTE 2)

PLAN VIEW

REFLECTOR DETAIL

NOTES

1. When installed in front of slopes steeper than 6:1, the distance between posts and slope break point shall be 1' - 0" minimum.
2. Where barrier is parallel to the edge of the travelled way, every sixth post shall have a reflector; see Reflector Detail. Reflectors shall be white when installed on the right side of traffic, and yellow when installed on the left side of traffic.
3. See Standard Plan C-11b for Cable Barrier Terminal details.

RICHARD BARSTOW ALBIN
STATE OF WASHINGTON
34042
REGISTERED
PROFESSIONAL ENGINEER

EXPIRES JULY 24, 2004

NOTE: THIS PLAN IS NOT A LEGAL ENGINEERING DOCUMENT BUT AN ELECTRONIC DUPLICATE. THE ORIGINAL, SIGNED BY THE ENGINEER AND APPROVED FOR PUBLICATION, IS KEPT ON FILE AT THE WASHINGTON STATE DEPARTMENT OF TRANSPORTATION. A COPY MAY BE OBTAINED UPON REQUEST.

CABLE BARRIER PLACEMENT

STANDARD PLAN C-11a

SHEET 1 OF 1 SHEET

APPROVED FOR PUBLICATION

Harold J. Peterfeso — STATE DESIGN ENGINEER — *05-20-04* — DATE

Washington State Department of Transportation

DATE	REVISION	BY
04/2004	REVISED TABLE, NOTE 1, & REFLECTOR DETAIL	MS

EFFECTIVE: APRIL 2, 2007 TO JANUARY 6, 2008

EFFECTIVE: APRIL 2, 2007 TO JANUARY 6, 2008

DRAWN BY: MARK SUJKA

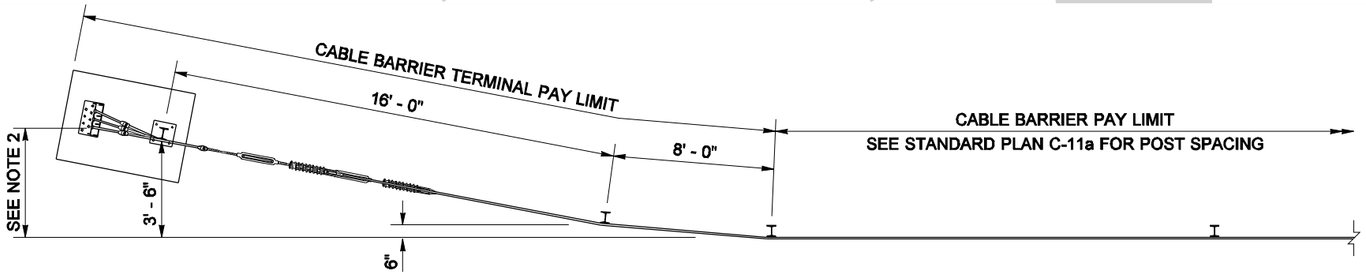

PLAN VIEW

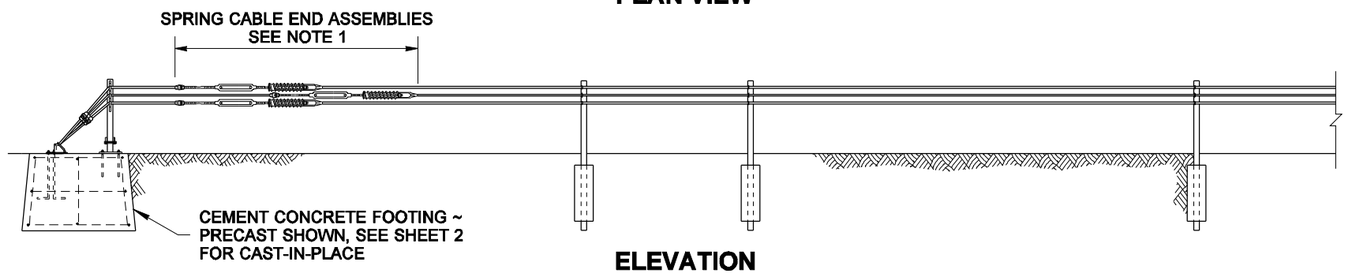

ELEVATION

NOTES

1. Stagger Spring Cable End assemblies for clearance between units.
   Installation of cable end assemblies shall be as follows:

   LENGTH OF CABLE RUNS:

   Up to 500' ~ Use the Spring Cable End Assembly on one end, and turnbuckle only on the other end of each cable.

   Over 500' to 2000' ~ Use the Spring Cable End Assembly on each end of each cable.

2. Distance from tangent of barrier run to notch for top cable on breakaway anchor angle shall be 4'.

3. Where the cable is connected to a cable socket with a wedge type connector, one wire of the wire rope shall be crimped over the base of the wedge to hold it firmly in place.

TABLE			
CABLE BARRIER	A TOP OF FOOTING TO TOP OF HIGHEST CABLE	B SLIP POST DIMENSIONS	C BETWEEN CABLES
TYPE 1	27"	S3 × 5.7 × 27 1/4"	3"
TYPE 2	30"	S3 × 5.7 × 30 1/4"	4 1/2"
TYPE 3	30"	S3 × 5.7 × 30 1/4"	4 1/2"

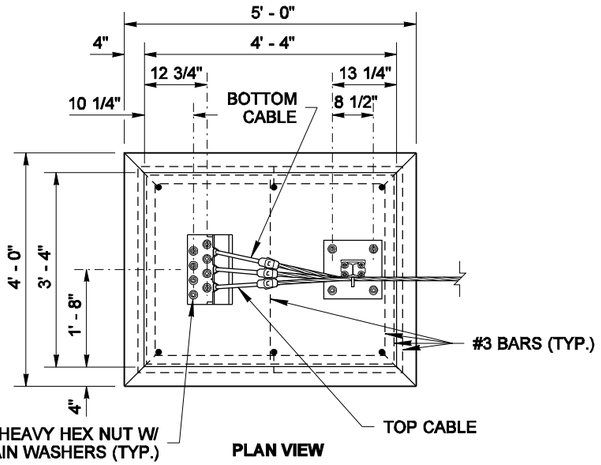

PLAN VIEW

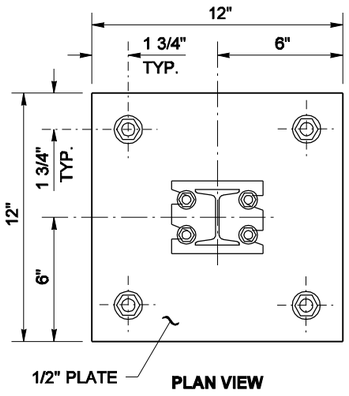

PLAN VIEW

POST SLIP BASE

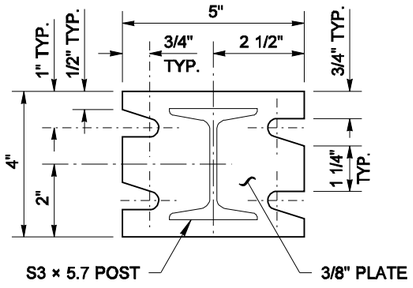

POST SLIP BASE DETAIL

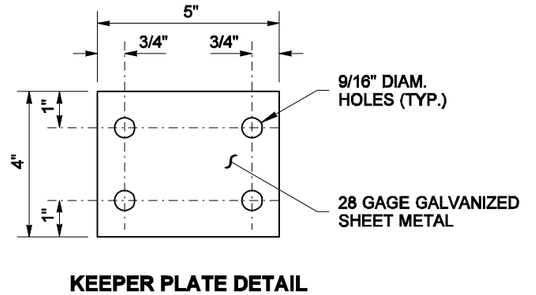

KEEPER PLATE DETAIL

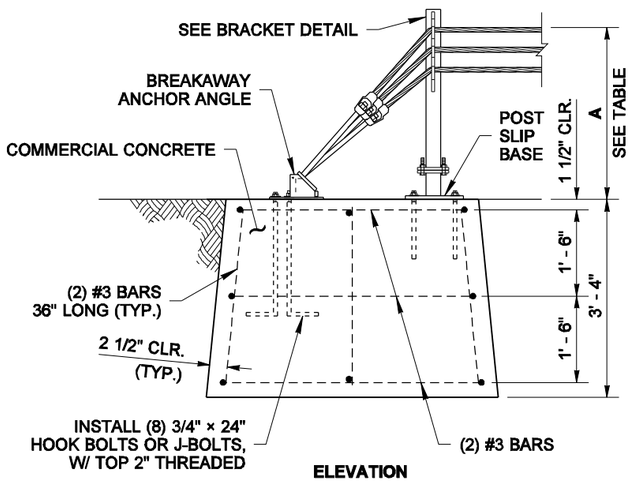

ELEVATION

PRECAST FOOTING

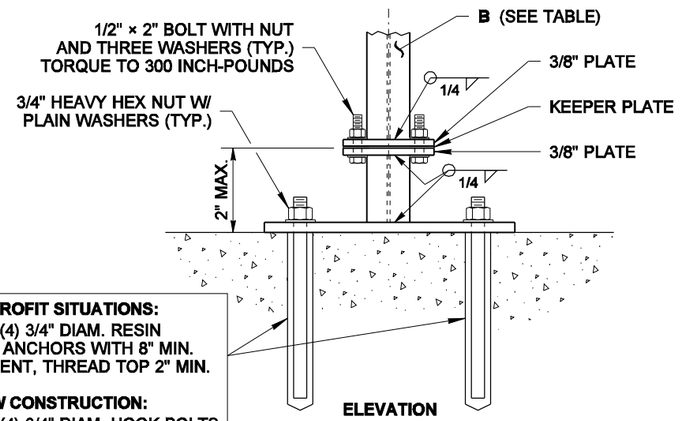

FOR RETROFIT SITUATIONS:
INSTALL (4) 3/4" DIAM. RESIN BONDED ANCHORS WITH 8" MIN. EMBEDMENT, THREAD TOP 2" MIN.

FOR NEW CONSTRUCTION:
INSTALL (4) 3/4" DIAM. HOOK BOLTS OR J-BOLTS OR RESIN BONDED ANCHORS W/ 8" MIN. EMBEDMENT, THREAD TOP 2" MIN.

ELEVATION

POST SLIP BASE

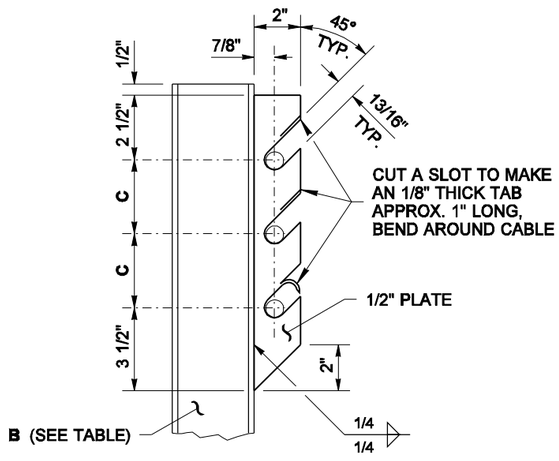

BRACKET DETAIL

RICHARD BARSTOW ALBIN
STATE OF WASHINGTON
34042
REGISTERED
PROFESSIONAL ENGINEER

EXPIRES JULY 24, 2004

NOTE: THIS PLAN IS NOT A LEGAL ENGINEERING DOCUMENT BUT AN ELECTRONIC DUPLICATE. THE ORIGINAL, SIGNED BY THE ENGINEER AND APPROVED FOR PUBLICATION, IS KEPT ON FILE AT THE WASHINGTON STATE DEPARTMENT OF TRANSPORTATION. A COPY MAY BE OBTAINED UPON REQUEST.

CABLE BARRIER TERMINAL

STANDARD PLAN C-11b

SHEET 1 OF 2 SHEETS

APPROVED FOR PUBLICATION

Harold J. Peterfeso — STATE DESIGN ENGINEER — *05-20-04* — DATE

Washington State Department of Transportation

DATE	REVISION	BY
04/2004	REV. FOUNDATION; REV. BOLT LENGTH FOR SLIP BASE.	MS

EFFECTIVE: APRIL 2, 2007 TO JANUARY 6, 2008

EFFECTIVE: APRIL 2, 2007 TO JANUARY 6, 2008

DRAWN BY: MARK SUJKA

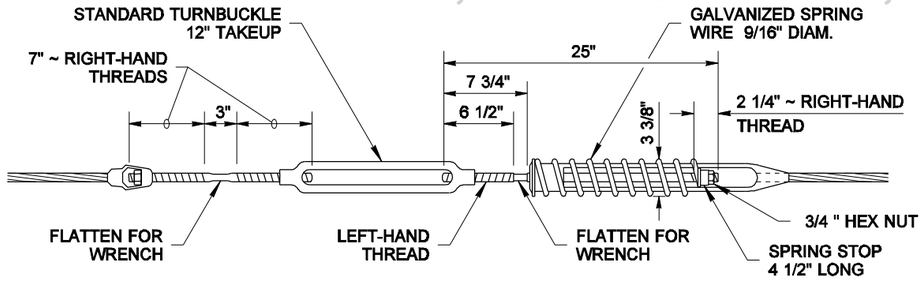

SPRING CABLE END ASSEMBLY

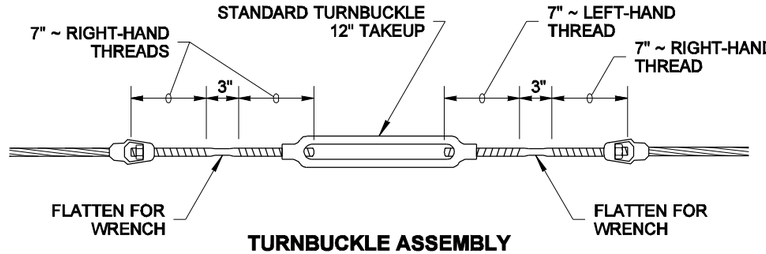

TURNBUCKLE ASSEMBLY

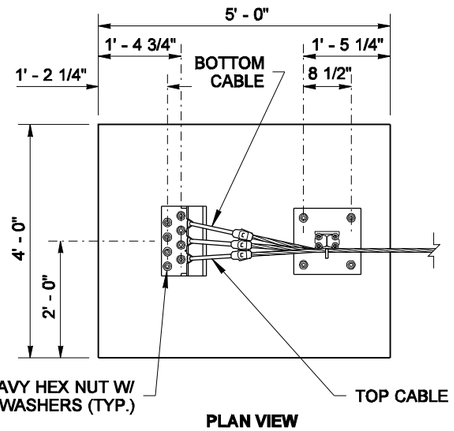

PLAN VIEW

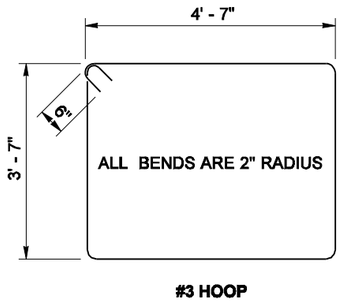

#3 HOOP

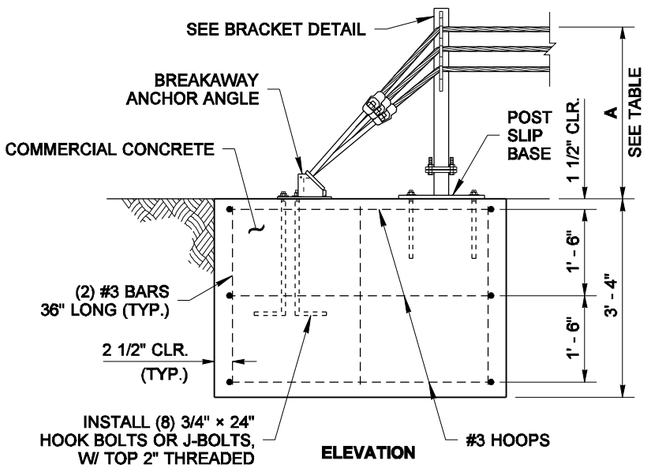

ELEVATION

CAST-IN-PLACE FOOTING

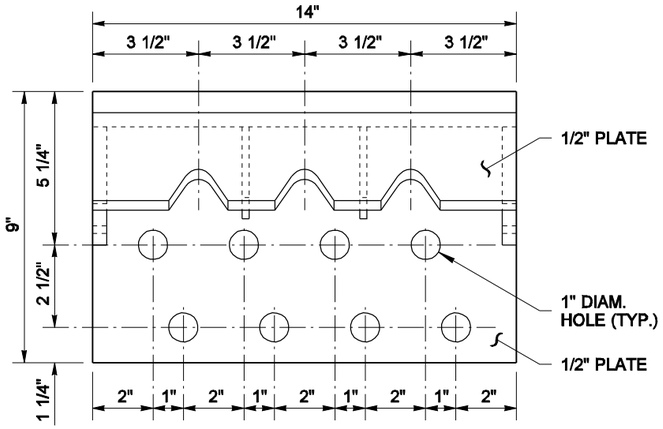

PLAN VIEW

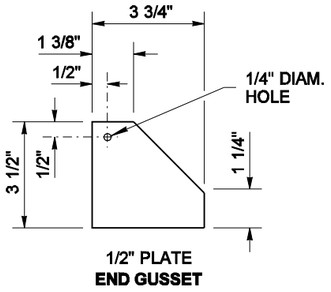

1/2" PLATE
END GUSSET

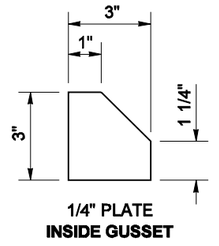

1/4" PLATE
INSIDE GUSSET

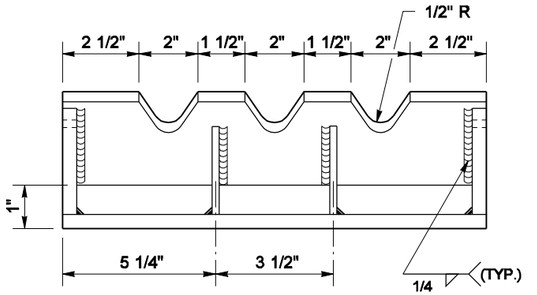

ELEVATION

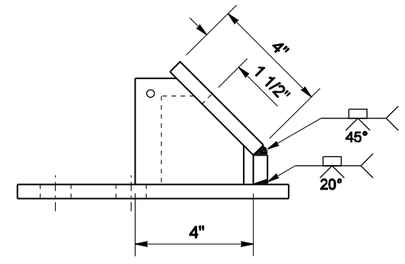

SIDE VIEW

BREAKAWAY ANCHOR ANGLE

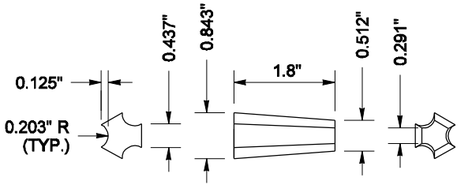

USE WITH ALL CABLE FITTINGS
CABLE WEDGE

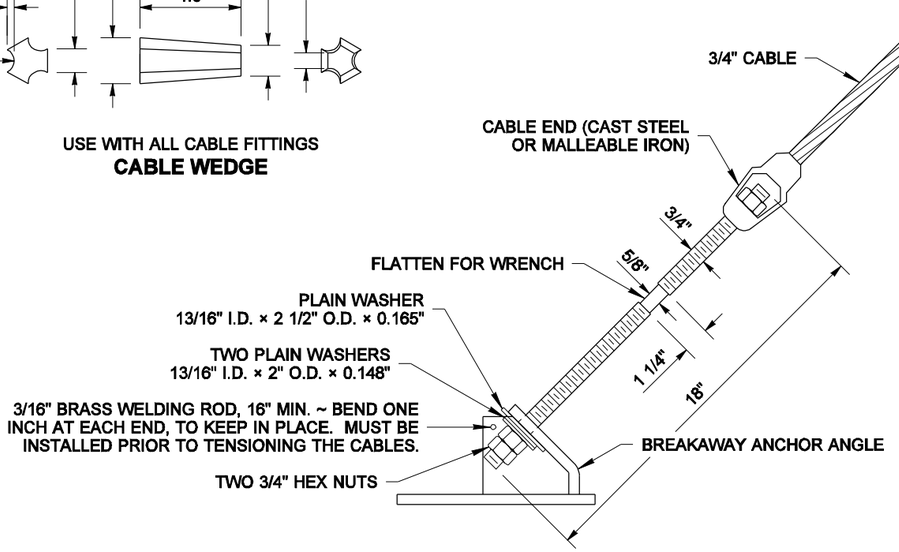

CABLE END ASSEMBLY TO
BREAKAWAY ANCHOR ANGLE DETAIL

RICHARD BARSTOW ALBIN
STATE OF WASHINGTON
34042
REGISTERED
PROFESSIONAL ENGINEER

EXPIRES JULY 24, 2004

NOTE: THIS PLAN IS NOT A LEGAL ENGINEERING DOCUMENT BUT AN ELECTRONIC DUPLICATE. THE ORIGINAL, SIGNED BY THE ENGINEER AND APPROVED FOR PUBLICATION, IS KEPT ON FILE AT THE WASHINGTON STATE DEPARTMENT OF TRANSPORTATION. A COPY MAY BE OBTAINED UPON REQUEST.

CABLE BARRIER TERMINAL

STANDARD PLAN C-11b

SHEET 2 OF 2 SHEETS

APPROVED FOR PUBLICATION

Harold J. Peterfeso — STATE DESIGN ENGINEER — *05-20-04* — DATE

Washington State Department of Transportation

EFFECTIVE: APRIL 2, 2007 TO JANUARY 6, 2008

EFFECTIVE: APRIL 2, 2007 TO JANUARY 6, 2008

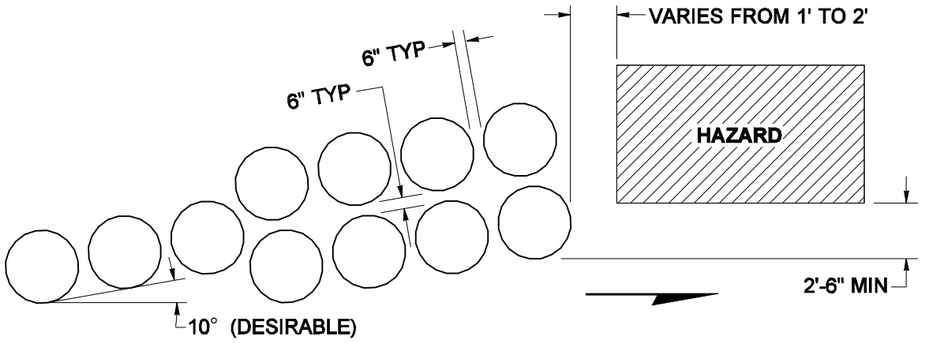

ROADSIDE INSTALLATION DETAIL

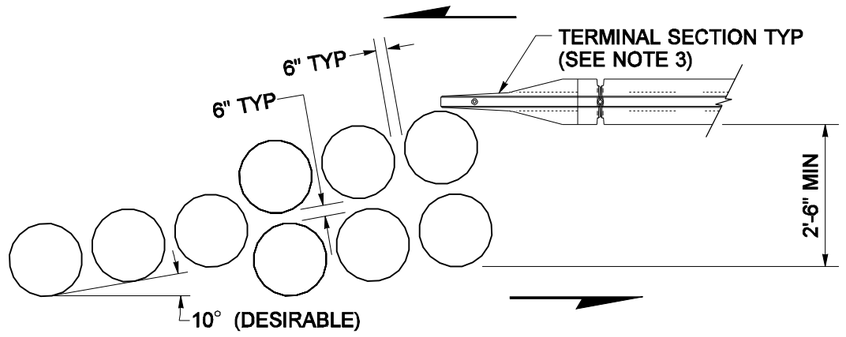

MEDIAN INSTALLATION DETAIL

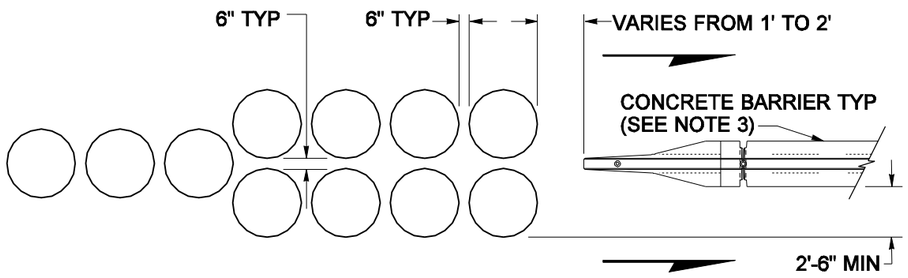

GORE INSTALLATION DETAIL

INSTALLATION DETAILS

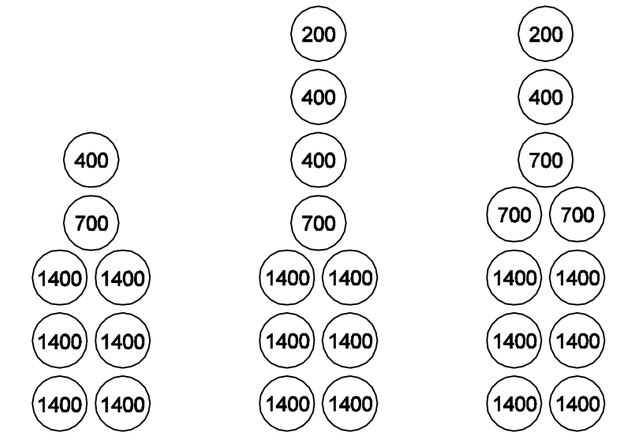

TYPE 1
POSTED SPEED
40 MPH OR LESS

TYPE 2
POSTED SPEED
45 MPH

TYPE 3
POSTED SPEED
50 MPH

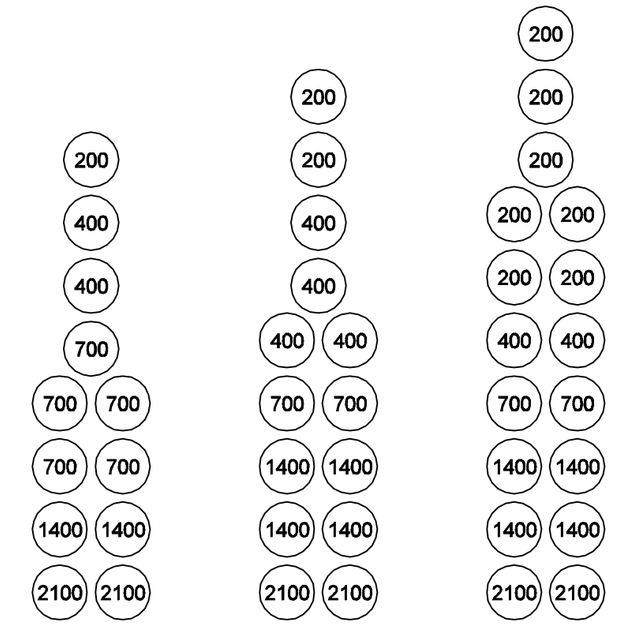

TYPE 4
POSTED SPEED
55 MPH

TYPE 5
POSTED SPEED
60 MPH

TYPE 6
POSTED SPEED
70 MPH

ATTENUATOR CONFIGURATIONS

NOTES

1. An Energite III System, fabricated by Energy Absorption Systems , Inc., a Fitch System as fabricated by Roadway Safety Service, Inc., or a Traffix Sand Attenuator as fabricated by Traffix Devices, Inc. shall be installed in accordance with the manufacturer's recommendations.
2. For temporary installations, the inertial barriers may be placed on wood pallets that are 4" or less in height.
3. For Terminal Section or Concrete Barrier details see Standard Plan C-8.

CLIFFORD E. MANSFIELD
STATE OF WASHINGTON
15224
REGISTERED
PROFESSIONAL ENGINEER

EXPIRES MAY 3, 2002

NOTE: THIS PLAN IS NOT A LEGAL ENGINEERING DOCUMENT BUT AN ELECTRONIC DUPLICATE. THE ORIGINAL, SIGNED BY THE ENGINEER AND APPROVED FOR PUBLICATION, IS KEPT ON FILE AT THE WASHINGTON STATE DEPARTMENT OF TRANSPORTATION. A COPY MAY BE OBTAINED UPON REQUEST.

IMPACT ATTENUATOR INERTIAL BARRIER CONFIGURATIONS

STANDARD PLAN C-12

APPROVED FOR PUBLICATION

Clifford E. Mansfield *07-27-01*

STATE DESIGN ENGINEER — DATE

Washington State Department of Transportation

DATE	REVISION	BY
7/01	CORRECTED GORE INSTALLATION DETAIL	MAS

EFFECTIVE: APRIL 2, 2007 TO JANUARY 6, 2008

THOMAS SHEA

PLAN VIEW

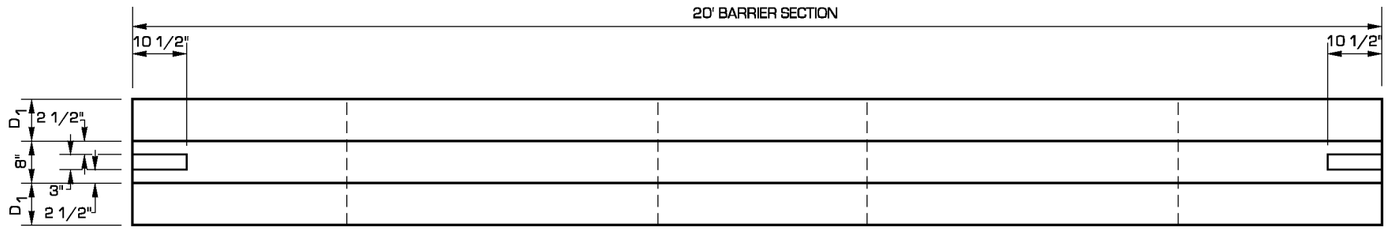

ELEVATION VIEW

42" HIGH BARRIER SHOWN

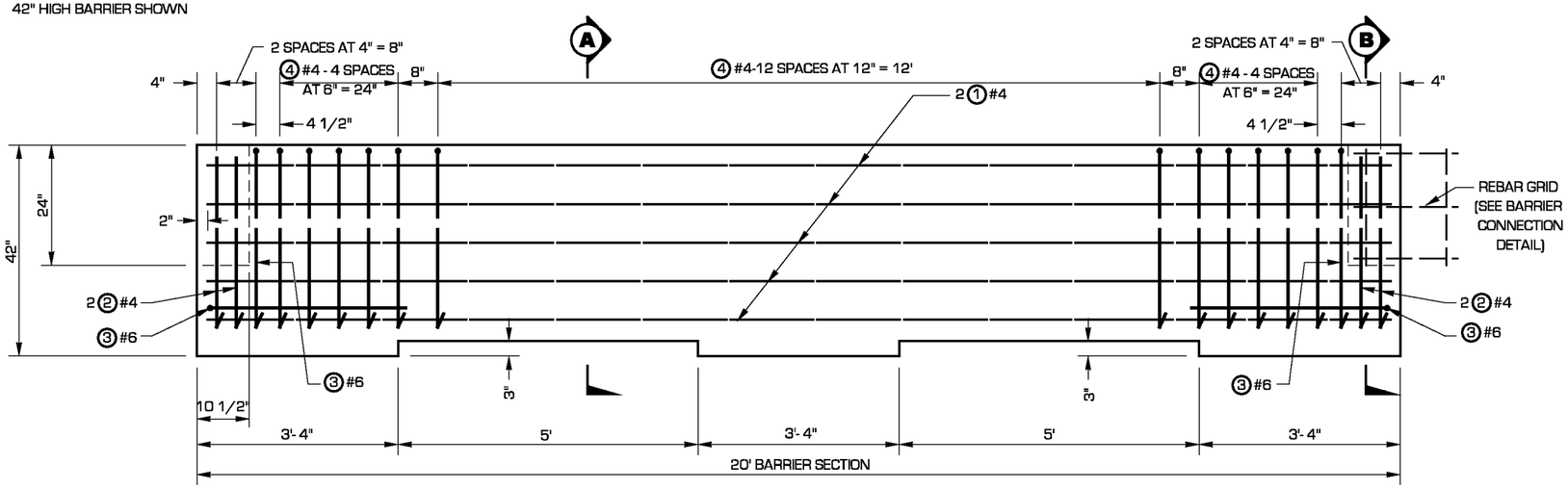

SECTIONS

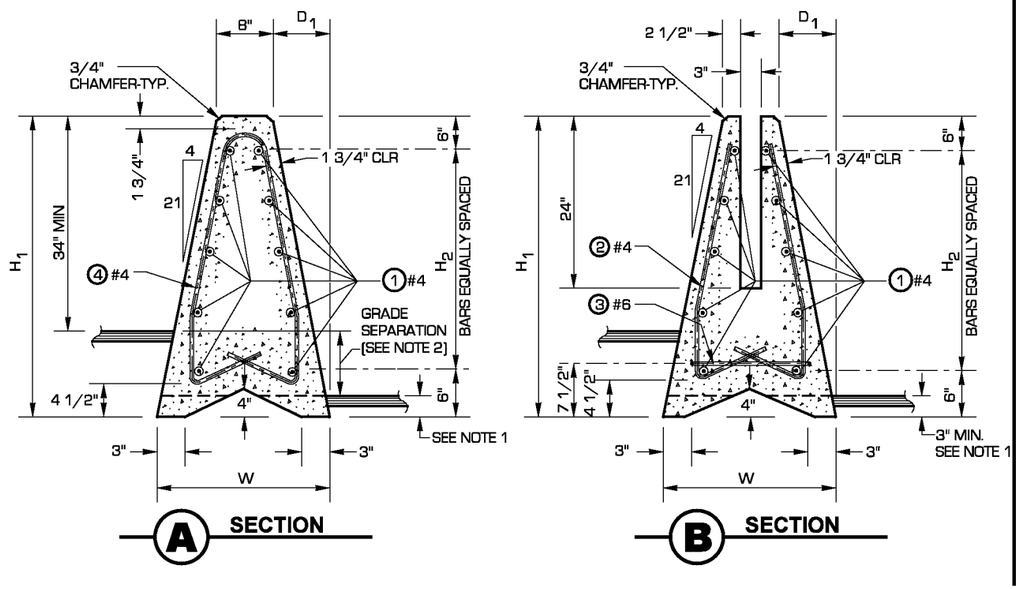

BARRIER CONNECTION DETAIL

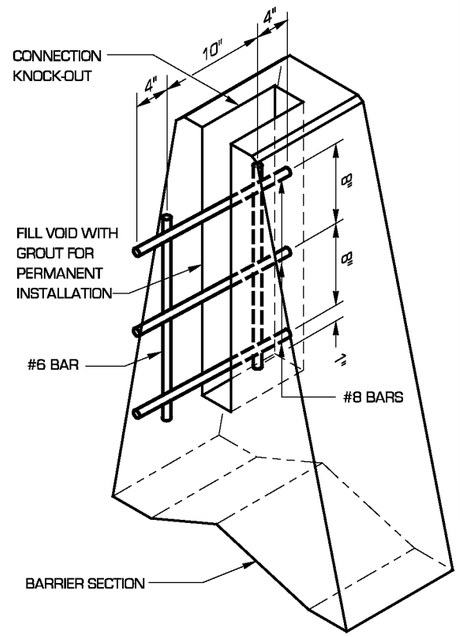

NOTES

1. PERMANENT BARRIER SHALL BE PLACED INTO THE PAVEMENT A MINIMUM OF 3". NO EMBEDMENT REQUIRED FOR TEMPORARY BARRIER.
2. USE 42" BARRIER FOR GRADE SEPARATIONS UP TO 5". USE 48" BARRIER FOR GRADE SEPARATIONS UP TO 7". USE 54" BARRIER FOR GRADE SEPARATIONS UP TO 10".
3. USE ON A HORIZONTAL CURVE WITH RADII LESS THAN 2000' REQUIRES A MODIFIED END DESIGN.

CLIFFORD E. MANSFIELD
STATE OF WASHINGTON
15224
REGISTERED
PROFESSIONAL ENGINEER

EXPIRES MAY 3, 2000

SINGLE SLOPE BARRIER PRE-CAST TYPE

STANDARD PLAN C-13

SHEET 1 OF 2 SHEETS

NOTE: THIS PLAN IS NOT A LEGAL ENGINEERING DOCUMENT BUT AN ELECTRONIC DUPLICATE. THE ORIGINAL, SIGNED BY THE ENGINEER AND APPROVED FOR PUBLICATION, IS KEPT ON FILE AT THE WASHINGTON STATE DEPARTMENT OF TRANSPORTATION. A COPY MAY BE OBTAINED UPON REQUEST.

APPROVED FOR PUBLICATION

Clifford E. Mansfield — *04-16-99*

DEPUTY STATE DESIGN ENGINEER — DATE

WASHINGTON STATE DEPARTMENT OF TRANSPORTATION
OLYMPIA, WASHINGTON

BAR LIST

BENDING DIAGRAM

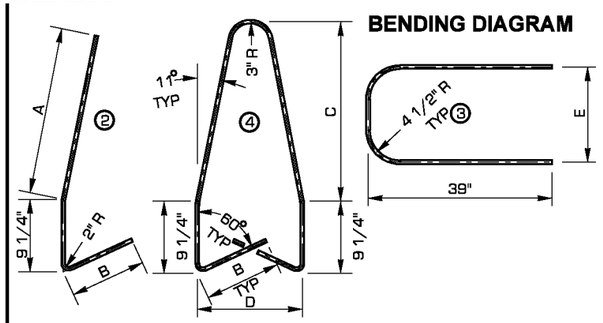

REINFORCING STEEL FOR ONE 20' LONG SECTION

H_1	MARK	SIZE	No.	LENGTH	A	B	C	D	E
42"	1	#4	10	19'-8"	-	-	-	-	-
	2	#4	8	41.3"	24"	10"	-	-	-
	3	#6	2	90.1"	-	-	-	-	16.1"
	4	#4	25	67"	-	10"	26.8"	15"	-
	H1	-	-	42"	-	-	-	-	-
	H2	-	-	30"	-	-	-	-	-
	W	-	-	24"	-	-	-	-	-
	D1	-	-	8"	-	-	-	-	-
48"	1	#4	12	19'-8"	-	-	-	-	-
	2	#4	8	50.4"	31.1"	12"	-	-	-
	3	#6	2	93.7"	-	-	-	-	17.7"
	4	#4	25	104"	-	12"	33.5"	17"	-
	H1	-	-	48"	-	-	-	-	-
	H2	-	-	36"	-	-	-	-	-
	W	-	-	26"	-	-	-	-	-
	D1	-	-	9.1"	-	-	-	-	-
54"	1	#4	14	19'-8"	-	-	-	-	-
	2	#4	8	57.9"	37.6"	13"	-	-	-
	3	#6	2	97.3"	-	-	-	-	21.1"
	4	#4	25	119"	-	13"	40"	20.3":	-
	H1	-	-	54"	-	-	-	-	-
	H2	-	-	42"	-	-	-	-	-
	W	-	-	28.6"	-	-	-	-	-
	D1	-	-	10.3"	-	-	-	-	-

BARRIER TRANSITION DETAIL

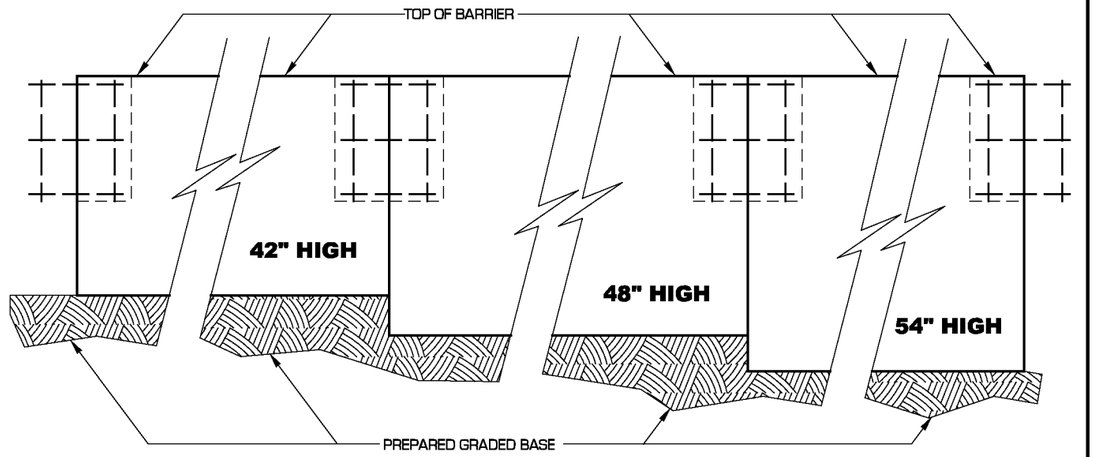



EXPIRES MAY 3, 2000

SINGLE SLOPE BARRIER PRE-CAST TYPE

STANDARD PLAN C-13

SHEET 2 OF 2 SHEETS

NOTE: THIS PLAN IS NOT A LEGAL ENGINEERING DOCUMENT BUT AN ELECTRONIC DUPLICATE. THE ORIGINAL, SIGNED BY THE ENGINEER AND APPROVED FOR PUBLICATION, IS KEPT ON FILE AT THE WASHINGTON STATE DEPARTMENT OF TRANSPORTATION. A COPY MAY BE OBTAINED UPON REQUEST.

APPROVED FOR PUBLICATION

Clifford E. Mansfield — *04-16-99*

DEPUTY STATE DESIGN ENGINEER — DATE

WASHINGTON STATE DEPARTMENT OF TRANSPORTATION
OLYMPIA, WASHINGTON

THOMAS SHEA

PLAN VIEW

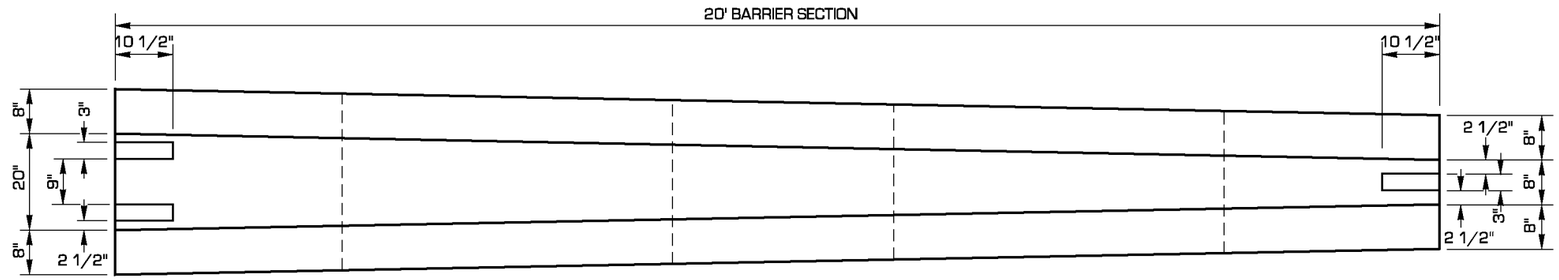

ELEVATION VIEW

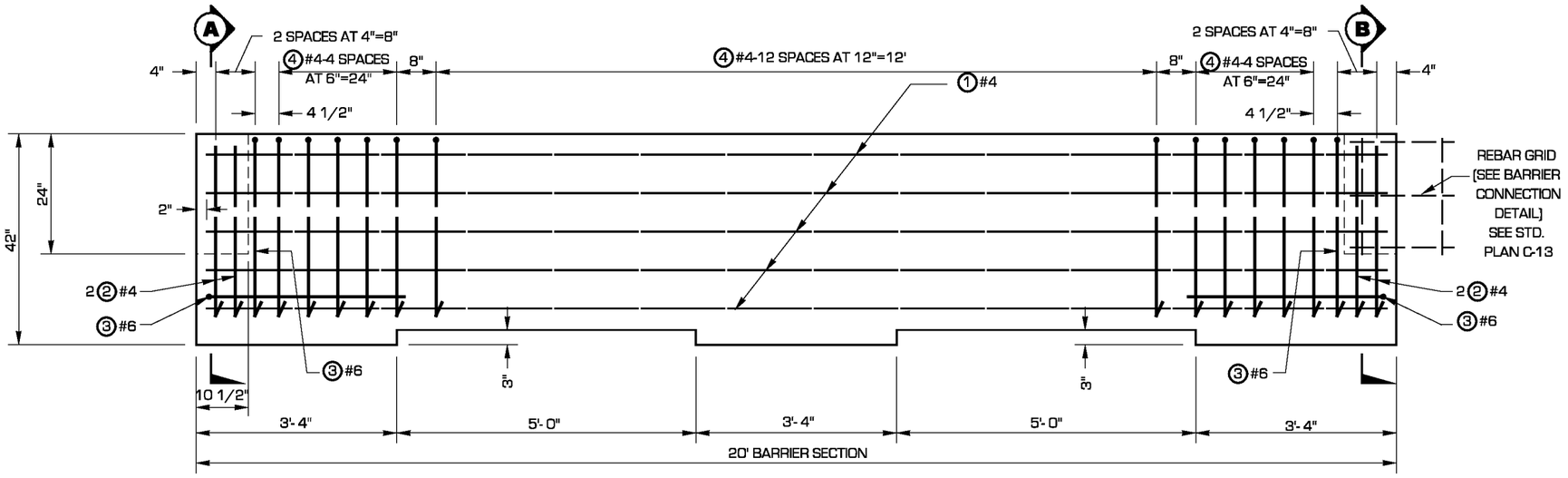

SECTIONS

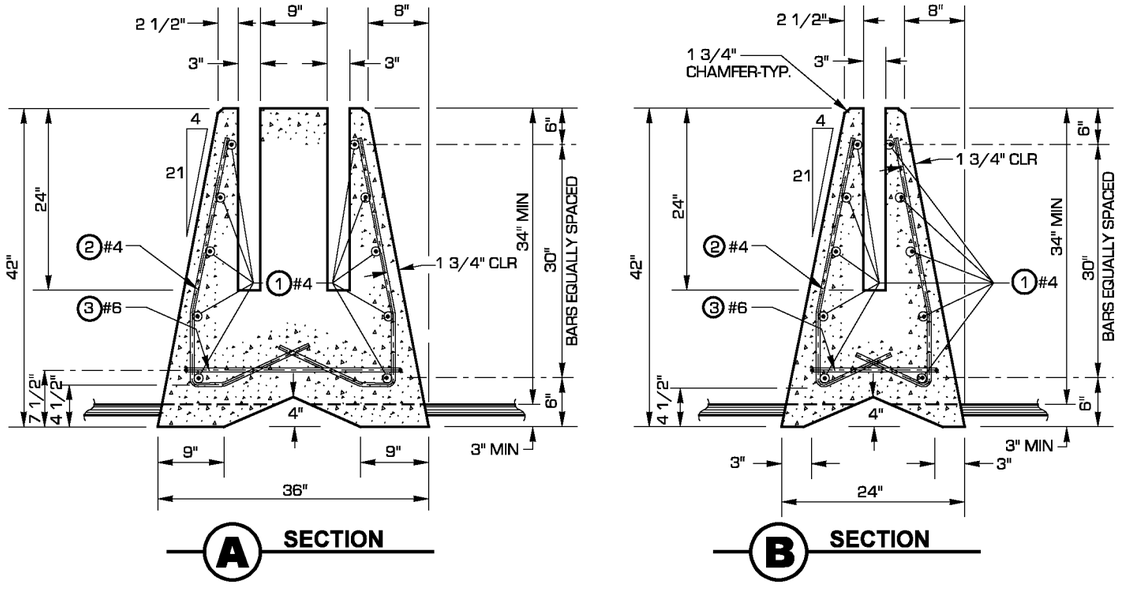

BAR LIST

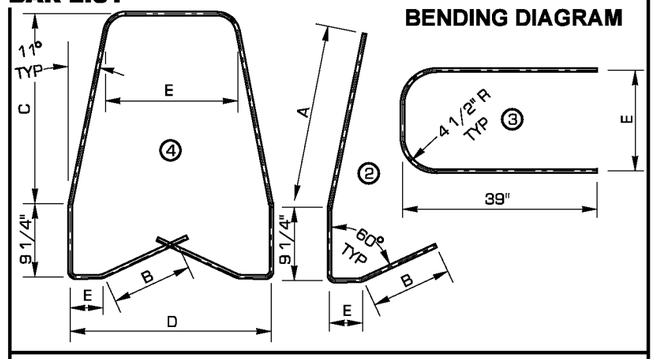

MARK	SIZE	No.	LENGTH	A	B	C	D	E
1	#4	10	19'-8" STR.	-	-	-	-	-
2	#4	8	VARIES	24"	VARIES	-	-	VARIES
3	#6	2	VARIES	-	-	-	-	VARIES
4	#4	25	VARIES	-	VARIES	26.8"	VARIES	VARIES

CLIFFORD E. MANSFIELD
STATE OF WASHINGTON
15224
REGISTERED
PROFESSIONAL ENGINEER

EXPIRES MAY 3, 2000

SINGLE SLOPE BARRIER PRE-CAST TYPE TRANSITION SECTION

STANDARD PLAN C-13a

NOTE: THIS PLAN IS NOT A LEGAL ENGINEERING DOCUMENT BUT AN ELECTRONIC DUPLICATE. THE ORIGINAL, SIGNED BY THE ENGINEER AND APPROVED FOR PUBLICATION, IS KEPT ON FILE AT THE WASHINGTON STATE DEPARTMENT OF TRANSPORTATION. A COPY MAY BE OBTAINED UPON REQUEST.

APPROVED FOR PUBLICATION

Clifford E. Mansfield — DEPUTY STATE DESIGN ENGINEER

04-16-99 — DATE

WASHINGTON STATE DEPARTMENT OF TRANSPORTATION
OLYMPIA, WASHINGTON

THOMAS SHEA

PLAN VIEW

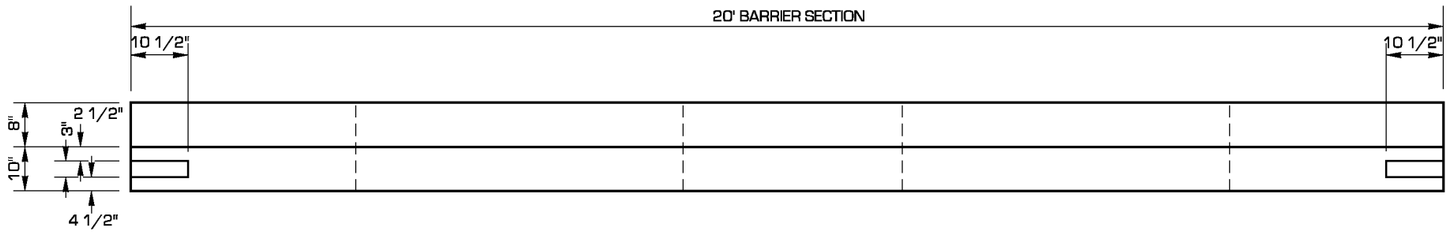

ELEVATION VIEW

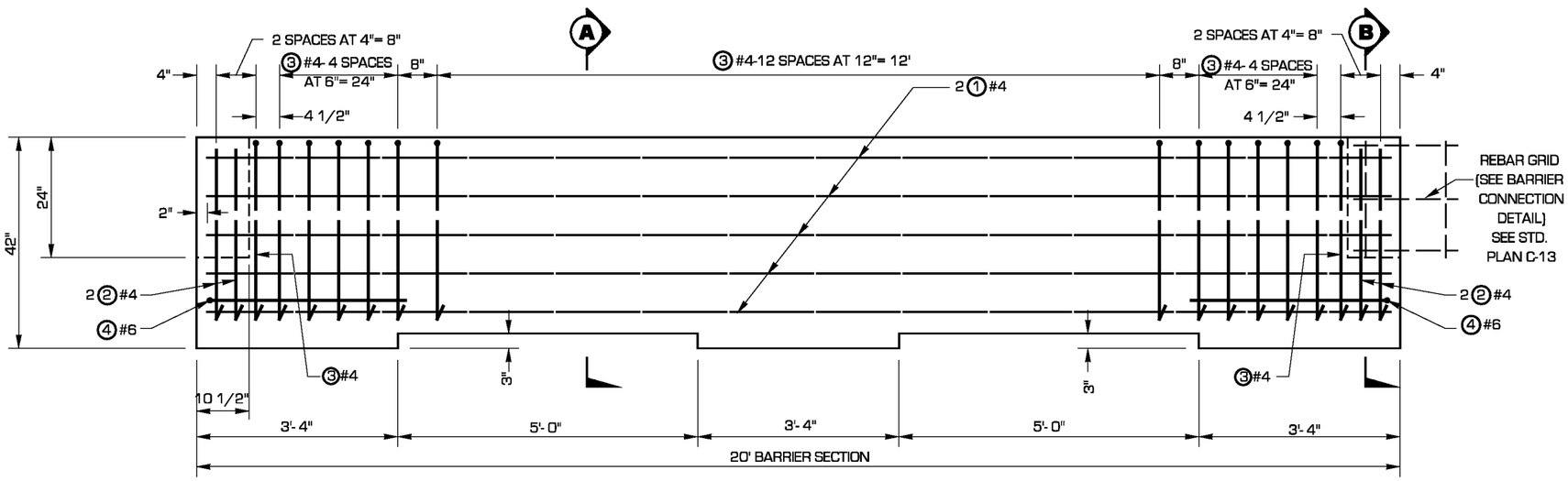

SECTIONS

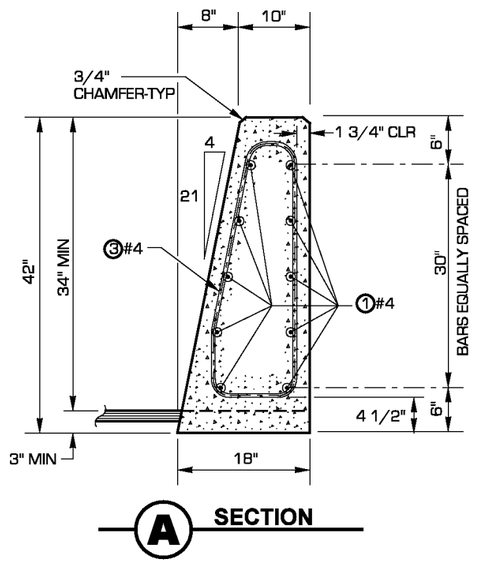

A SECTION

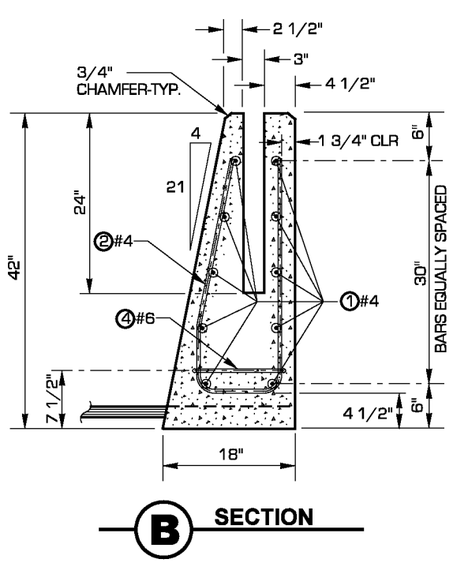

B SECTION

BAR LIST

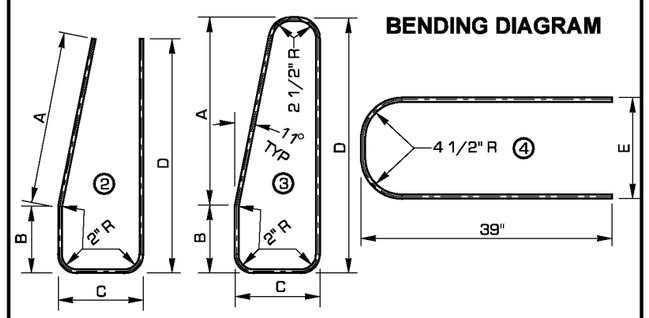

	MARK	SIZE	No.	LENGTH	A	B	C	D	E
42"	1	#4	10	19'-8" str.	-	-	-	-	-
	2	#4	8	70.5"	22.8"	8"	9.5"	30"	-
	3	#4	25	78.7	26.6"	8"	9.5"	32"	-
	4	#6	2	84.3"	-	-	-	-	9.5"

CLIFFORD E. MANSFIELD STATE OF WASHINGTON 15224 REGISTERED PROFESSIONAL ENGINEER

EXPIRES MAY 3, 2000

SINGLE SLOPE BARRIER PRE-CAST TYPE SINGLE SIDED SECTION STANDARD PLAN C-13b

NOTE: THIS PLAN IS NOT A LEGAL ENGINEERING DOCUMENT BUT AN ELECTRONIC DUPLICATE. THE ORIGINAL, SIGNED BY THE ENGINEER AND APPROVED FOR PUBLICATION, IS KEPT ON FILE AT THE WASHINGTON STATE DEPARTMENT OF TRANSPORTATION. A COPY MAY BE OBTAINED UPON REQUEST.

APPROVED FOR PUBLICATION

Clifford E. Mansfield — *04-16-99*

DEPUTY STATE DESIGN ENGINEER — DATE

WASHINGTON STATE DEPARTMENT OF TRANSPORTATION
OLYMPIA, WASHINGTON

EFFECTIVE: APRIL 2, 2007 TO JANUARY 6, 2008

DRAWN BY: MARK SUJKA

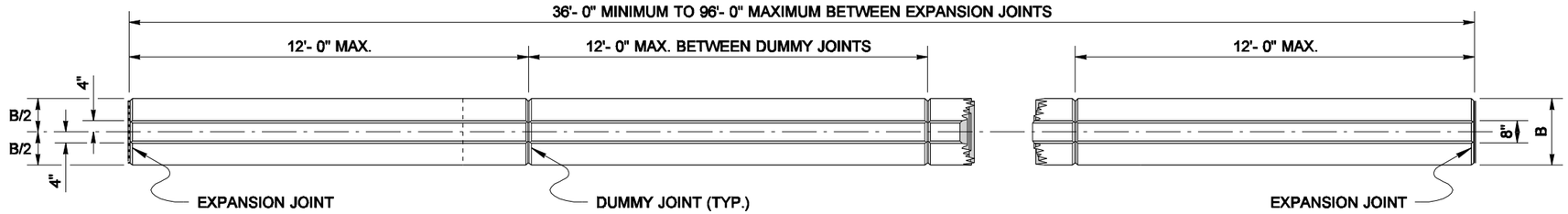

PLAN

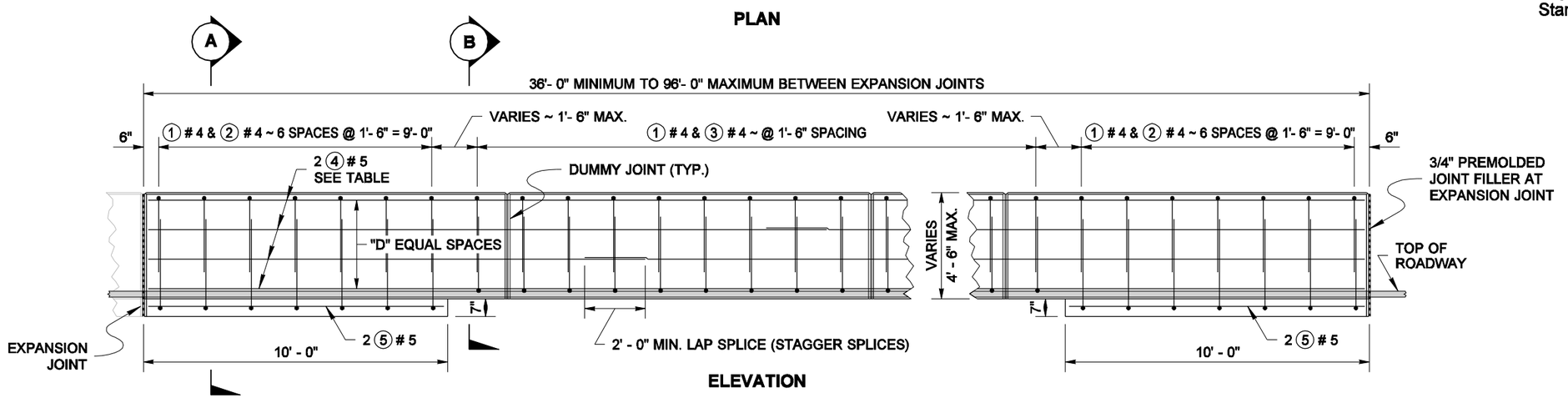

ELEVATION

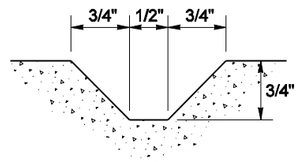

DUMMY JOINT

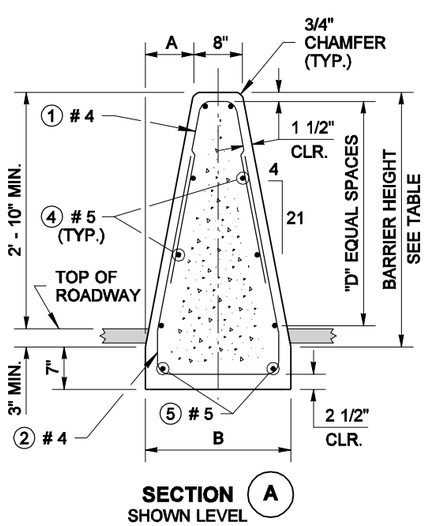

SECTION (A) SHOWN LEVEL

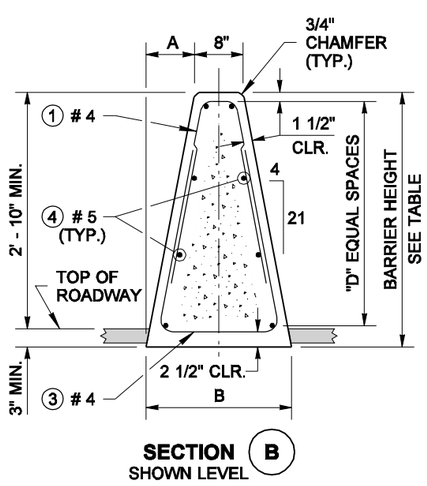

SECTION (B) SHOWN LEVEL

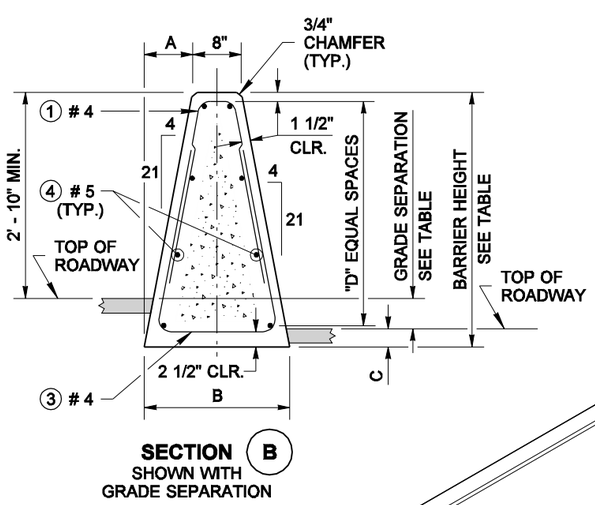

SECTION (B) SHOWN WITH GRADE SEPARATION

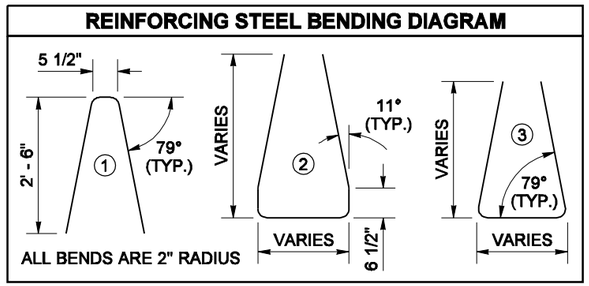

DIMENSION TABLE						
GRADE SEPARATION	BARRIER HEIGHT	A	B	C	D	HORIZONTAL BARS (QTY.)
0 TO 5"	3' - 6"	8"	2' - 0"	3"	3	8
UP TO 7"	4' - 0"	9 1/8"	2' - 2 1/4"	7"	4	10
UP TO 10"	4' - 6"	10 1/4"	2' - 4 1/2"	10"	5	12

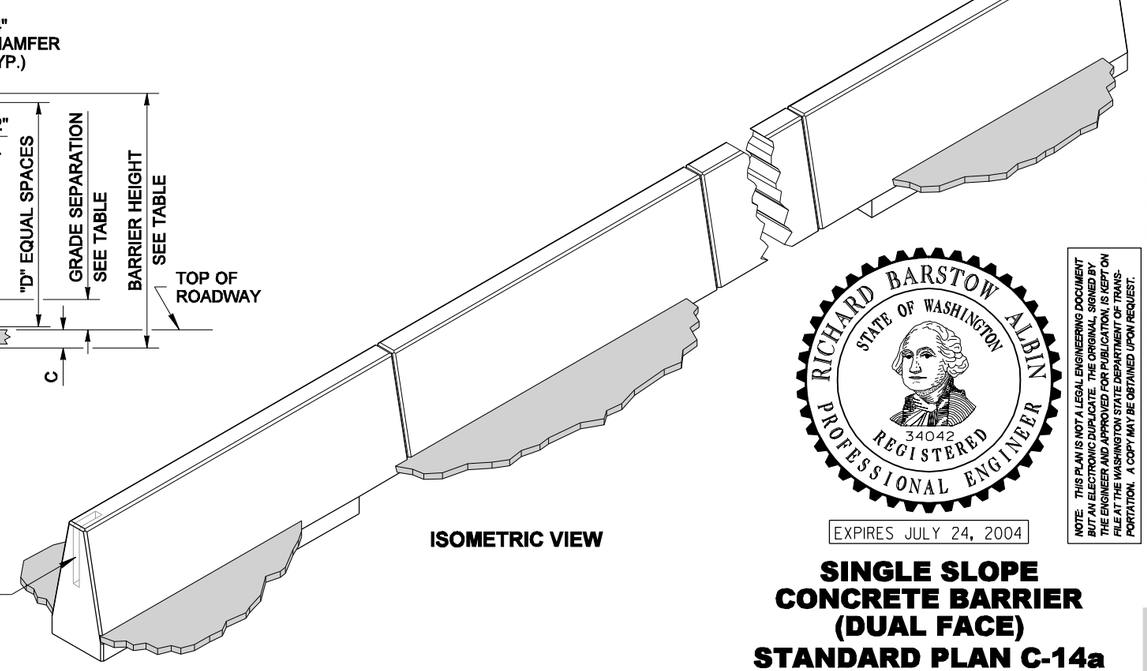

ISOMETRIC VIEW

NOTES

1. Reinforcing steel dimensions and clearances are shown for stationary form construction. When slip-form construction is used, increase reinforcing steel clearances to the outside surfaces of the barrier to 2 1/2" and adjust the steel dimensions as required.
2. When connecting between cast-in-place and precast single slope barrier, provide a slot and rebar grid as shown in Standard Plan C-13.

RICHARD BARSTOW ALBIN
STATE OF WASHINGTON
34042
REGISTERED
PROFESSIONAL ENGINEER

EXPIRES JULY 24, 2004

NOTE: THIS PLAN IS NOT A LEGAL ENGINEERING DOCUMENT BUT AN ELECTRONIC DUPLICATE. THE ORIGINAL, SIGNED BY THE ENGINEER, AND APPROVED FOR PUBLICATION, IS KEPT ON FILE AT THE WASHINGTON STATE DEPARTMENT OF TRANSPORTATION. A COPY MAY BE OBTAINED UPON REQUEST.

SINGLE SLOPE CONCRETE BARRIER (DUAL FACE) STANDARD PLAN C-14a

SHEET 1 OF 1 SHEET

APPROVED FOR PUBLICATION

Harold J. Peterfeso — STATE DESIGN ENGINEER — *07-26-02* — DATE

Washington State Department of Transportation

EFFECTIVE: APRIL 2, 2007 TO JANUARY 6, 2008

EFFECTIVE: APRIL 2, 2007 TO JANUARY 6, 2008

DRAWN BY: MARK SUJKA

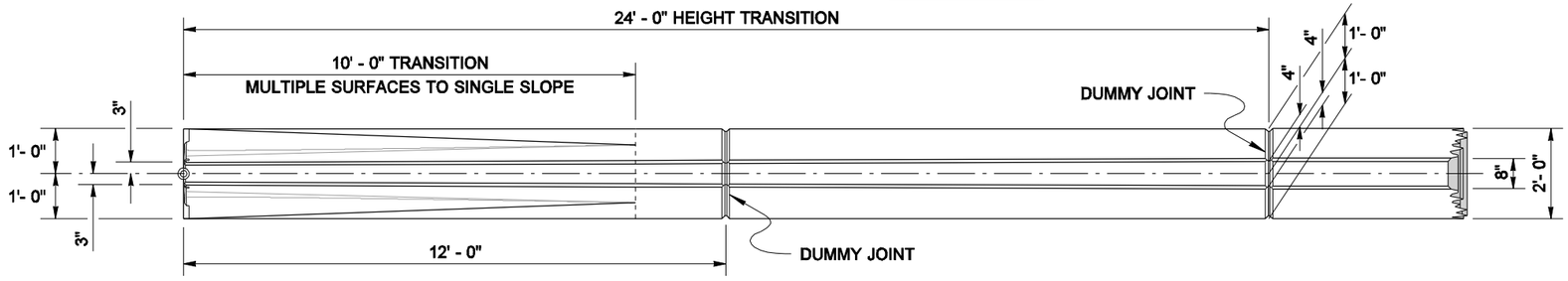

PLAN

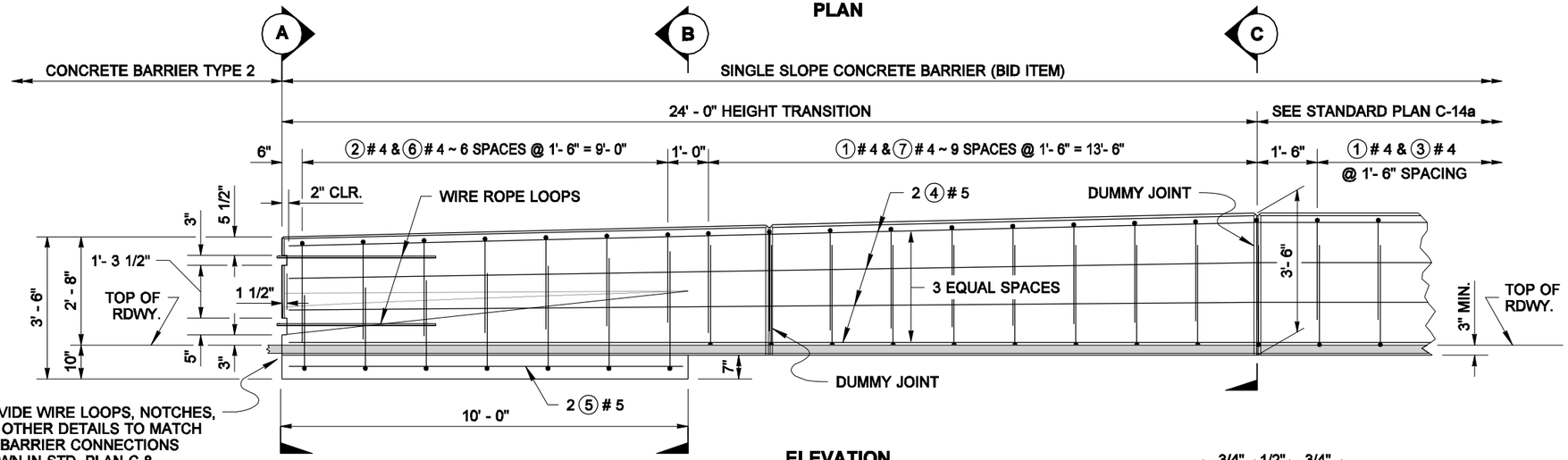

ELEVATION

NOTE

This plan is for transitions to Pre-cast Concrete Barrier Type 2 only. See contract for transitions to other barrier shapes and bridge rails.

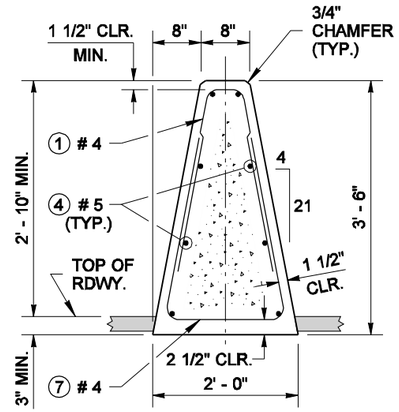

SECTION C

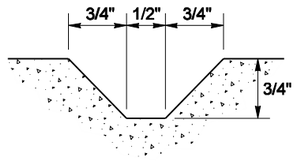

DUMMY JOINT

ISOMETRIC VIEW

REINFORCING STEEL BENDING DIAGRAM

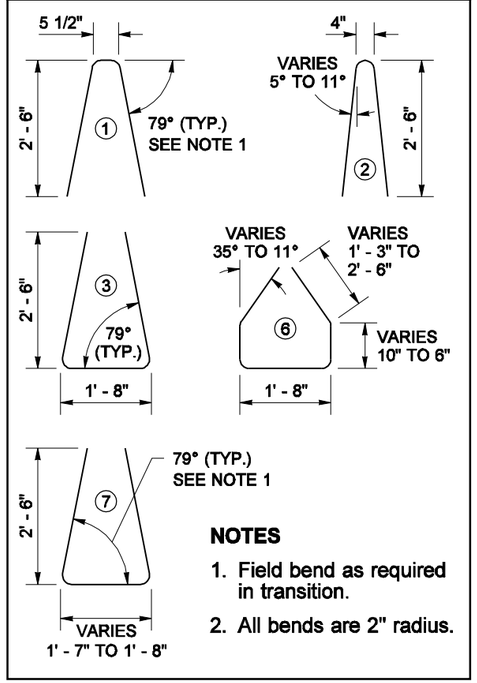

NOTES

1. Field bend as required in transition.
2. All bends are 2" radius.

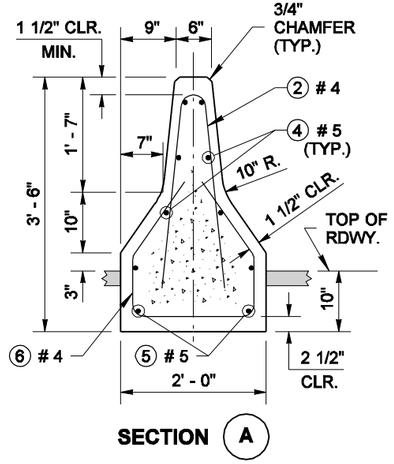

SECTION A

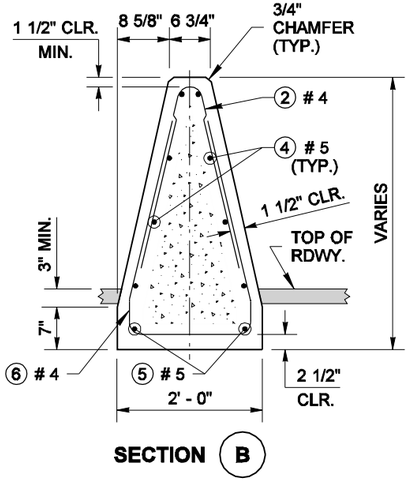

SECTION B

RICHARD BARSTOW ALBIN
STATE OF WASHINGTON
34042
REGISTERED
PROFESSIONAL ENGINEER
EXPIRES JULY 24, 2004

NOTE: THIS PLAN IS NOT A LEGAL ENGINEERING DOCUMENT BUT AN ELECTRONIC DUPLICATE. THE ORIGINAL, SIGNED BY THE ENGINEER AND APPROVED FOR PUBLICATION, IS KEPT ON FILE AT THE WASHINGTON STATE DEPARTMENT OF TRANSPORTATION. A COPY MAY BE OBTAINED UPON REQUEST.

CONCRETE BARRIER TRANSITION TYPE 2 TO SINGLE SLOPE

STANDARD PLAN C-14b

SHEET 1 OF 1 SHEET

APPROVED FOR PUBLICATION

Harold J. Peterfeso — STATE DESIGN ENGINEER

07-26-02 — DATE

Washington State Department of Transportation

EFFECTIVE: APRIL 2, 2007 TO JANUARY 6, 2008

EFFECTIVE: APRIL 2, 2007 TO JANUARY 6, 2008

DRAWN BY: MARK SUJKA

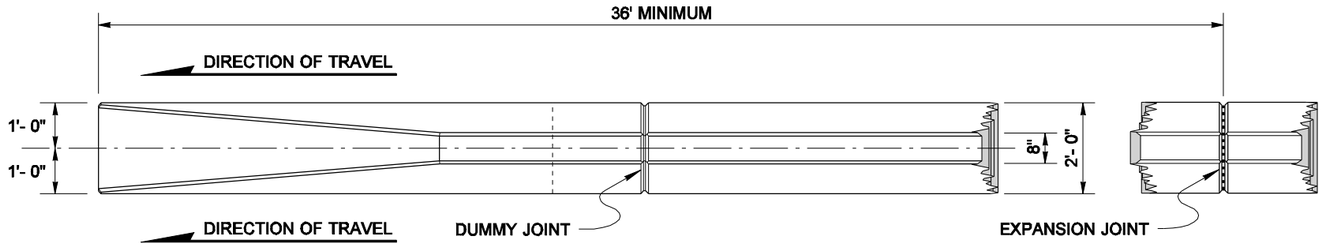

PLAN

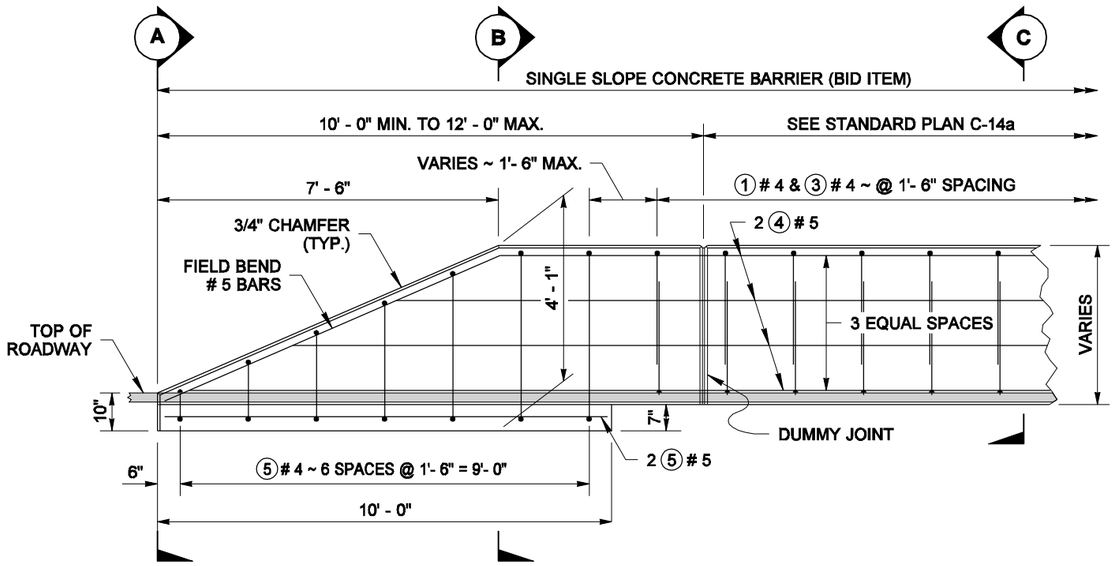

ELEVATION

NOTE

The Barrier Terminal is only used on the trailing end of a barrier separating two roadways with the same direction of travel.

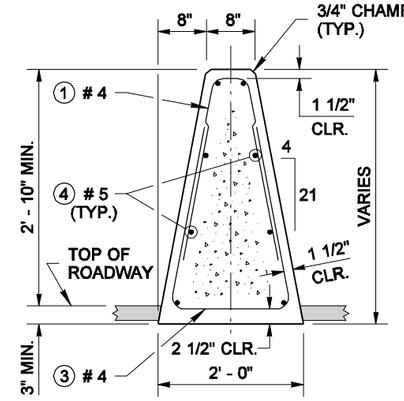

SECTION C

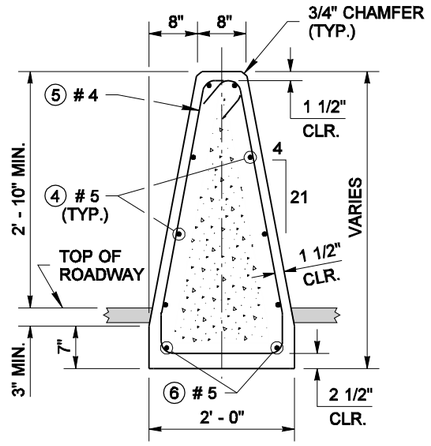

SECTION B

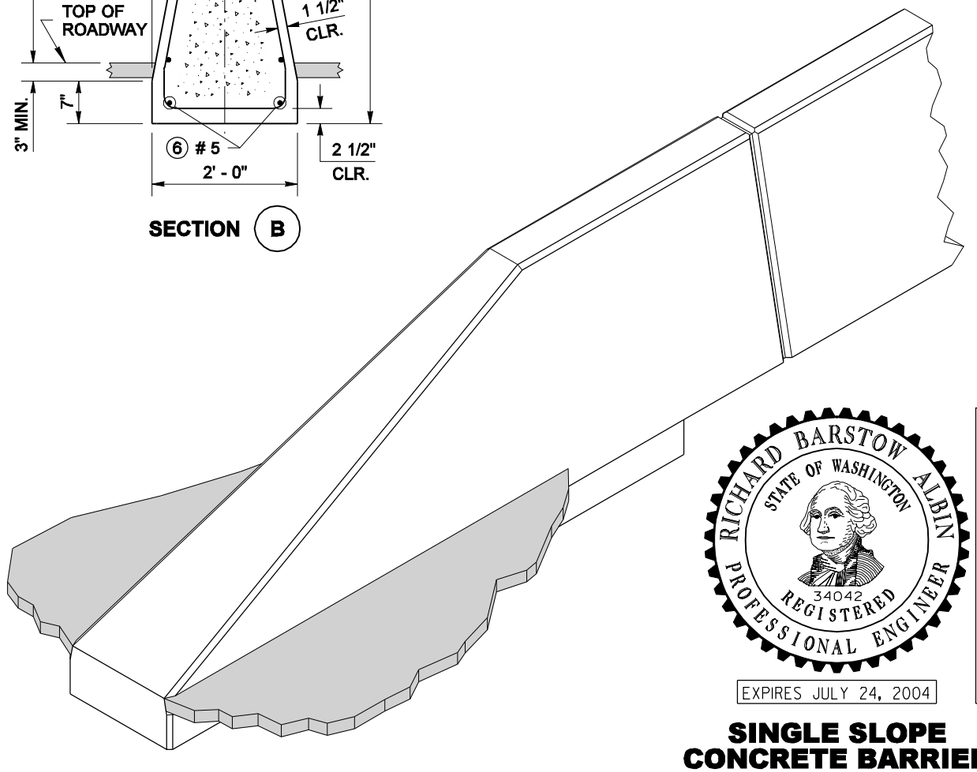

ISOMETRIC VIEW

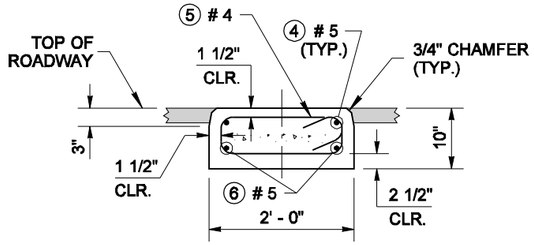

SECTION A

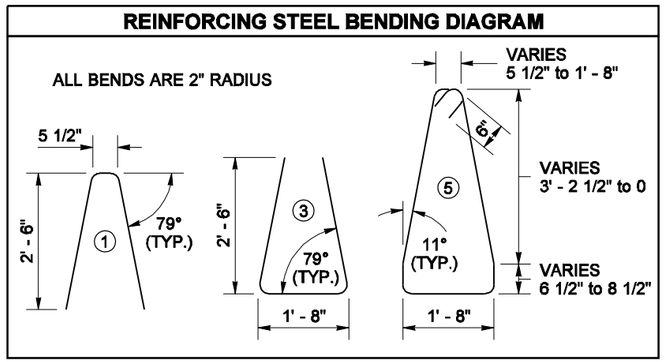

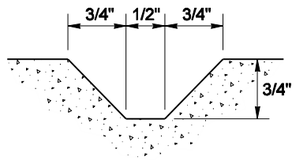

DUMMY JOINT

EXPIRES JULY 24, 2004

NOTE: THIS PLAN IS NOT A LEGAL ENGINEERING DOCUMENT BUT AN ELECTRONIC DUPLICATE. THE ORIGINAL, SIGNED BY THE ENGINEER AND APPROVED FOR PUBLICATION, IS KEPT ON FILE AT THE WASHINGTON STATE DEPARTMENT OF TRANSPORTATION. A COPY MAY BE OBTAINED UPON REQUEST.

SINGLE SLOPE CONCRETE BARRIER TERMINAL

STANDARD PLAN C-14c

SHEET 1 OF 1 SHEET

APPROVED FOR PUBLICATION

Harold J. Peterfeso — STATE DESIGN ENGINEER

07-26-02 — DATE

Washington State Department of Transportation

EFFECTIVE: APRIL 2, 2007 TO JANUARY 6, 2008

EFFECTIVE: APRIL 2, 2007 TO JANUARY 6, 2008

DRAWN BY: MARK SUJKA

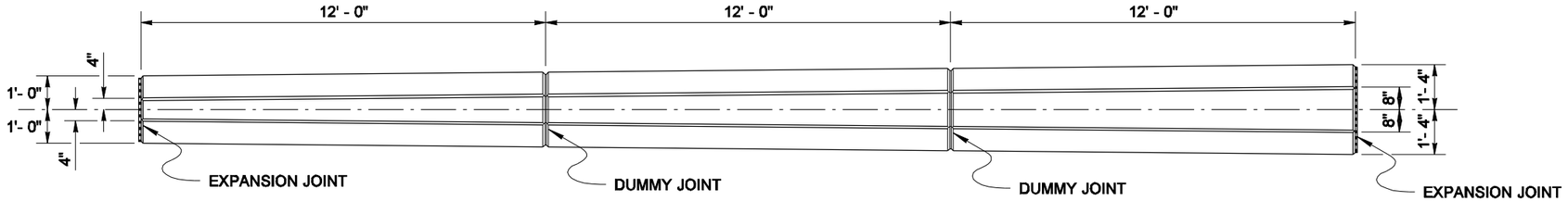

PLAN

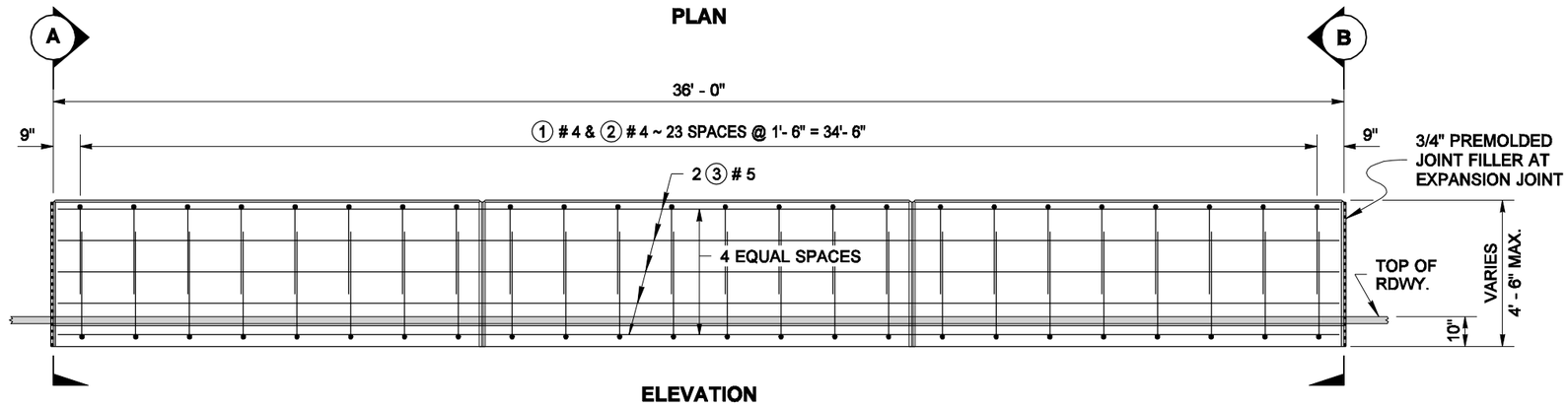

ELEVATION

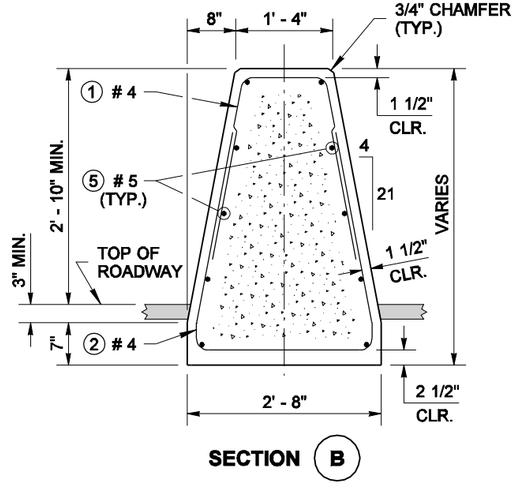

SECTION (B)

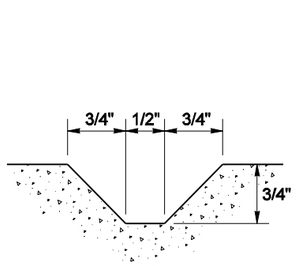

DUMMY JOINT

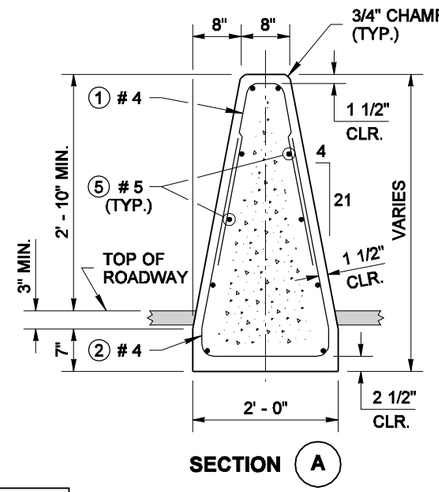

SECTION (A)

BAR LIST				
MARK	LOCATION	QTY.	SIZE	BENDING DIAGRAM
①	BARRIER ~ TOP VERTICAL	24	4	
②	BARRIER ~ BOTTOM VERTICAL	24	4	
③	BARRIER ~ HORIZONTAL	10	5	

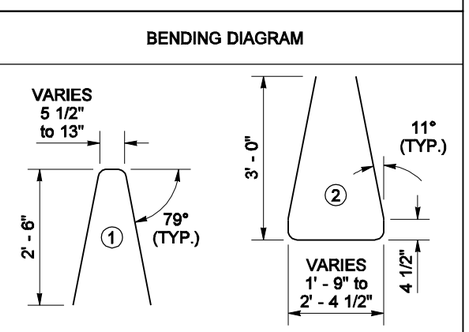

ALL BENDS ARE 2" RADIUS
ALL DIMENSIONS ARE OUT TO OUT

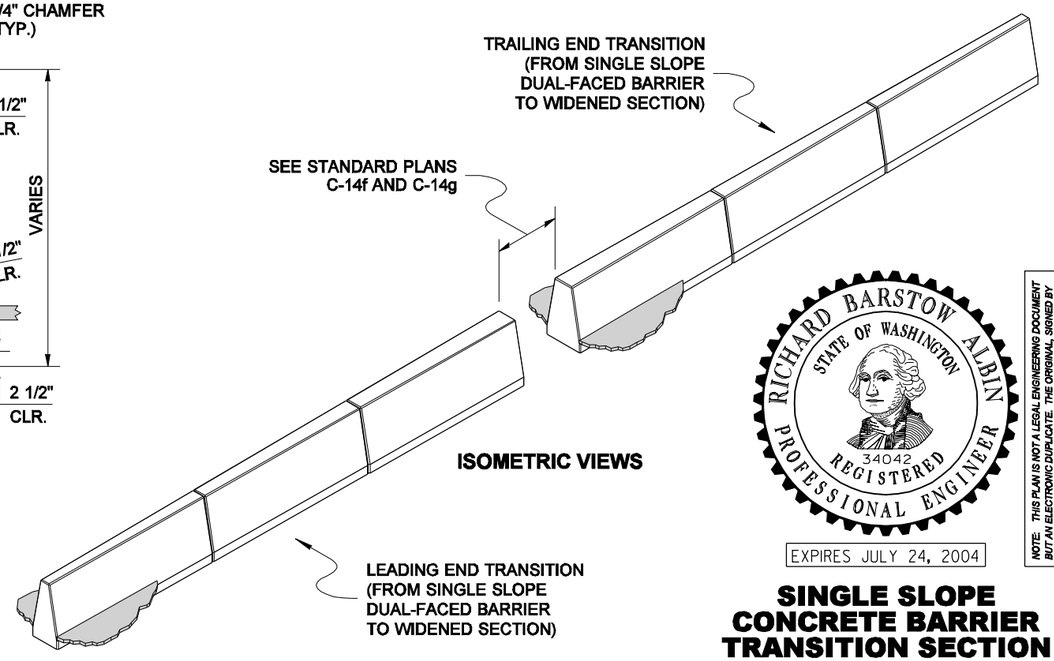

ISOMETRIC VIEWS

RICHARD BARSTOW ALBIN
STATE OF WASHINGTON
34042
REGISTERED
PROFESSIONAL ENGINEER

EXPIRES JULY 24, 2004

NOTE: THIS PLAN IS NOT A LEGAL ENGINEERING DOCUMENT BUT AN ELECTRONIC DUPLICATE. THE ORIGINAL, SIGNED BY THE ENGINEER AND APPROVED FOR PUBLICATION, IS KEPT ON FILE AT THE WASHINGTON STATE DEPARTMENT OF TRANSPORTATION. A COPY MAY BE OBTAINED UPON REQUEST.

SINGLE SLOPE CONCRETE BARRIER TRANSITION SECTION

STANDARD PLAN C-14d

SHEET 1 OF 1 SHEET

APPROVED FOR PUBLICATION

Harold J. Peterfeso — STATE DESIGN ENGINEER — *07-26-02* — DATE

Washington State Department of Transportation

EFFECTIVE: APRIL 2, 2007 TO JANUARY 6, 2008

EFFECTIVE: APRIL 2, 2007 TO JANUARY 6, 2008

EFFECTIVE: APRIL 2, 2007 TO JANUARY 6, 2008

DRAWN BY: MARK SUJKA

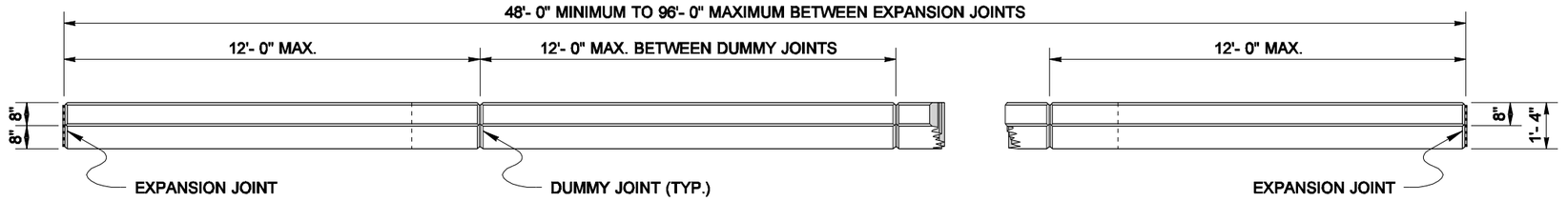

PLAN

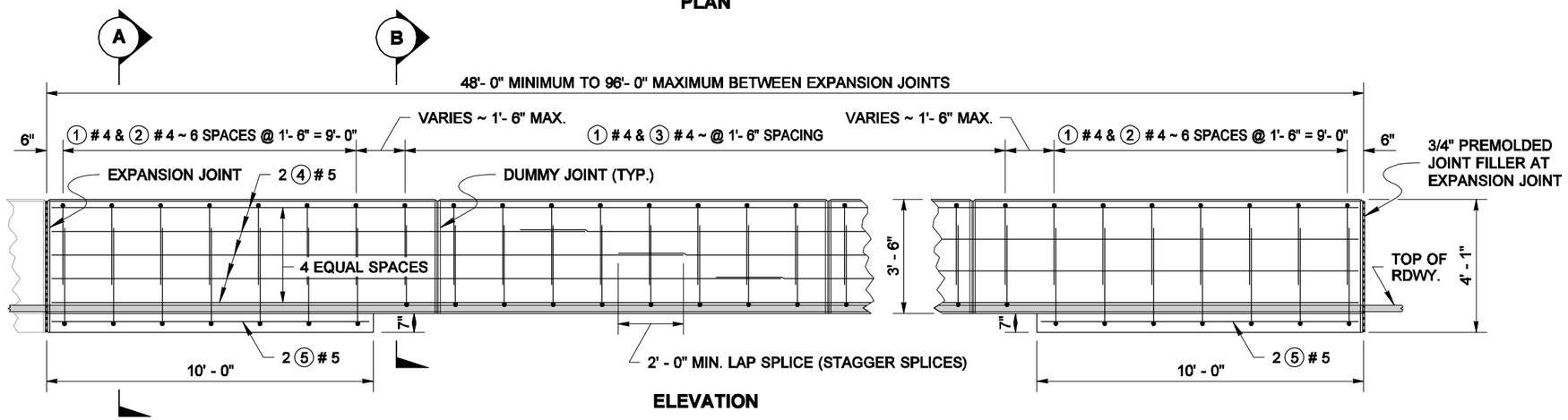

ELEVATION

NOTES

1. Reinforcing steel dimensions and clearances are shown for stationary form construction. When slip-form construction is used, increase reinforcing steel clearances to the outside surfaces of the barrier to 2 1/2" and adjust steel dimensions as required.
2. The Vertical Back Barrier is only used in the configurations shown in Standard Plans C-14f and C-14g.

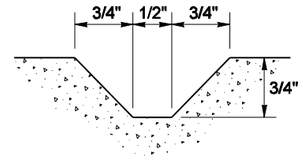

DUMMY JOINT

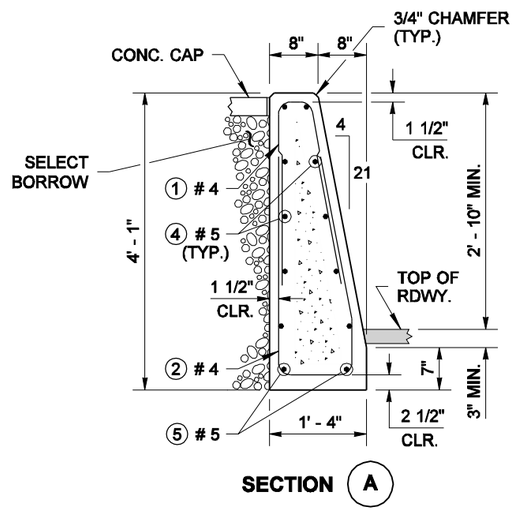

SECTION (A)

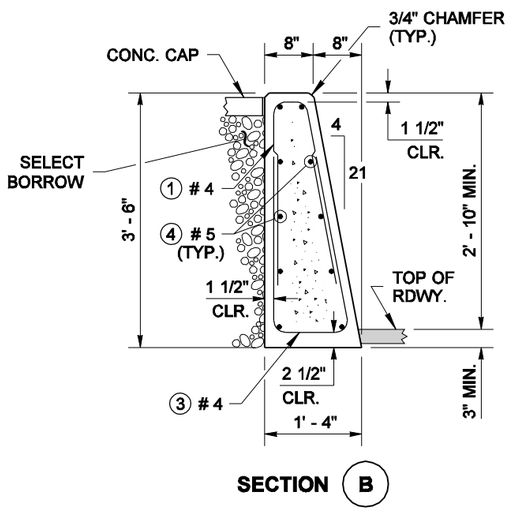

SECTION (B)

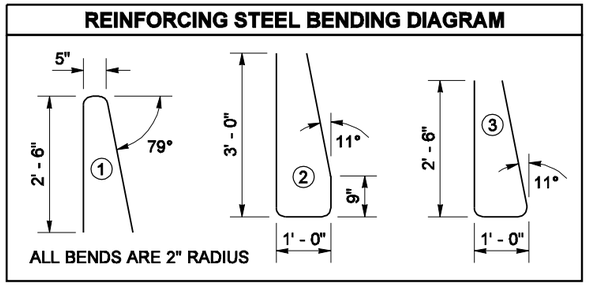

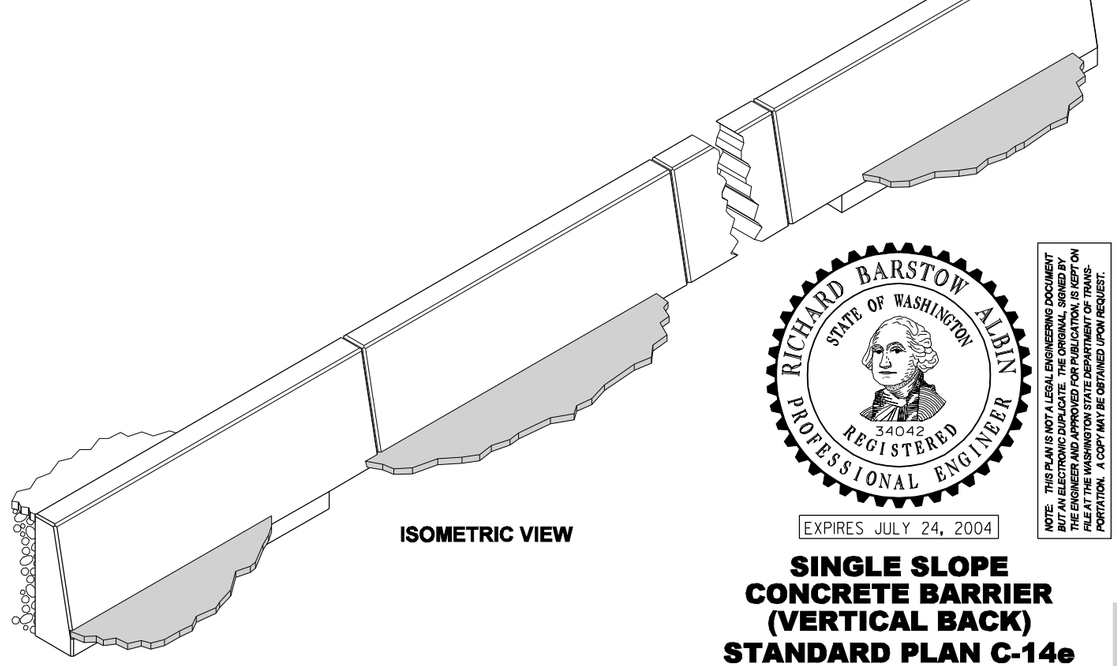

ISOMETRIC VIEW

RICHARD BARSTOW ALBIN
STATE OF WASHINGTON
34042
REGISTERED
PROFESSIONAL ENGINEER

EXPIRES JULY 24, 2004

NOTE: THIS PLAN IS NOT A LEGAL ENGINEERING DOCUMENT BUT AN ELECTRONIC DUPLICATE. THE ORIGINAL, SIGNED BY THE ENGINEER AND APPROVED FOR PUBLICATION, IS KEPT ON FILE AT THE WASHINGTON STATE DEPARTMENT OF TRANSPORTATION. A COPY MAY BE OBTAINED UPON REQUEST.

SINGLE SLOPE CONCRETE BARRIER (VERTICAL BACK) STANDARD PLAN C-14e

SHEET 1 OF 1 SHEET

APPROVED FOR PUBLICATION

Harold J. Peterfeso — STATE DESIGN ENGINEER

07-26-02 — DATE

Washington State Department of Transportation

EFFECTIVE: APRIL 2, 2007 TO JANUARY 6, 2008

EFFECTIVE: APRIL 2, 2007 TO JANUARY 6, 2008

EFFECTIVE: APRIL 2, 2007 TO JANUARY 6, 2008

EFFECTIVE: APRIL 2, 2007 TO JANUARY 6, 2008

DRAWN BY: MARK SUJKA

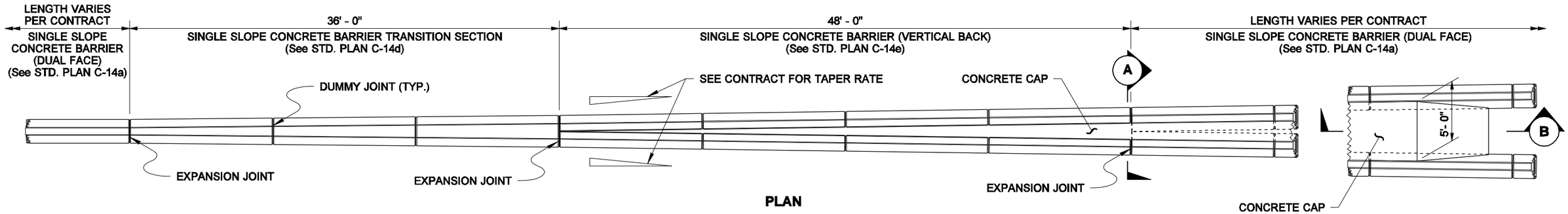

PLAN

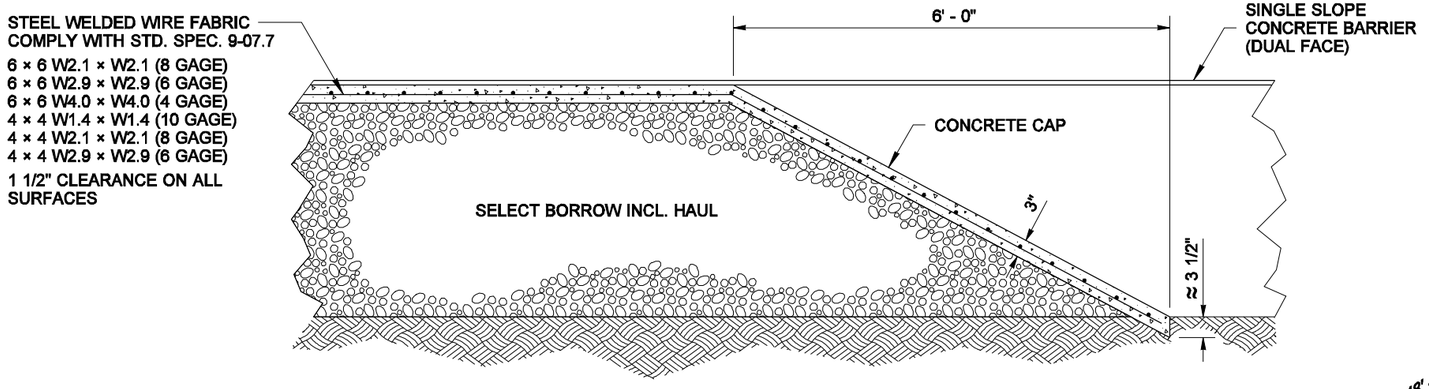

SECTION (B)

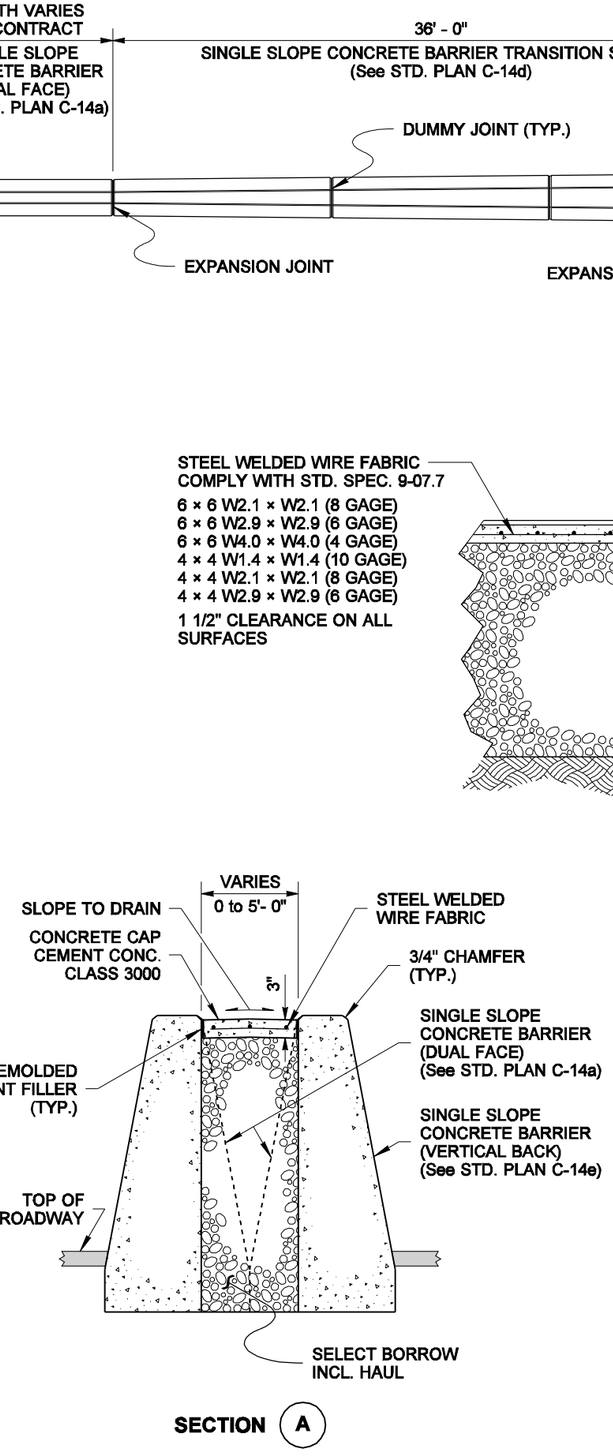

SECTION (A)

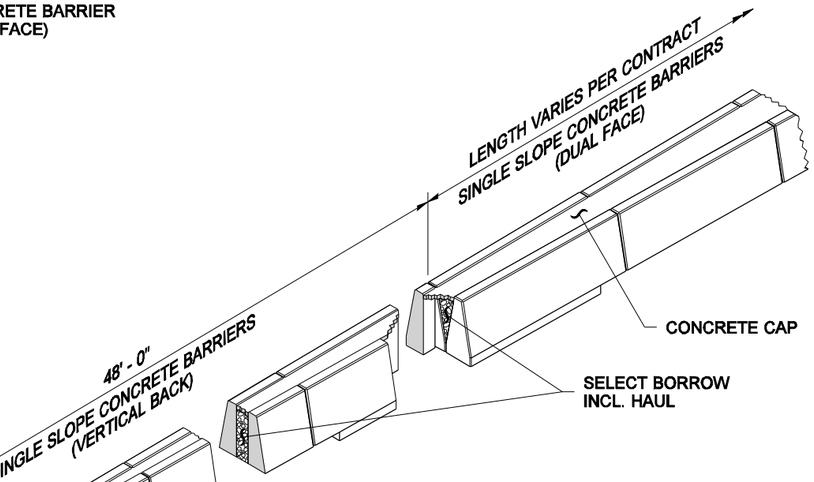

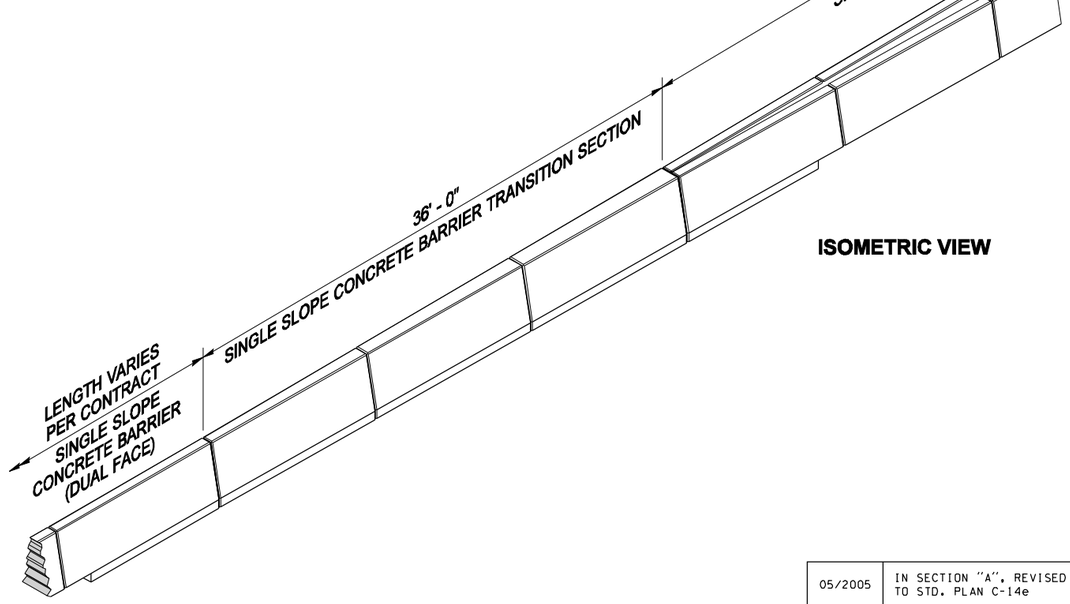

ISOMETRIC VIEW

RICHARD BARSTOW ALBIN
STATE OF WASHINGTON
34042
REGISTERED
PROFESSIONAL ENGINEER

EXPIRES JULY 24, 2006

NOTE: THIS PLAN IS NOT A LEGAL ENGINEERING DOCUMENT BUT AN ELECTRONIC DUPLICATE. THE ORIGINAL, SIGNED BY THE ENGINEER AND APPROVED FOR PUBLICATION, IS KEPT ON FILE AT THE WASHINGTON STATE DEPARTMENT OF TRANSPORTATION. A COPY MAY BE OBTAINED UPON REQUEST.

SINGLE SLOPE CONCRETE BARRIER PLACEMENT

STANDARD PLAN C-14f

SHEET 1 OF 1 SHEET

APPROVED FOR PUBLICATION

Harold J. Peterfeso — STATE DESIGN ENGINEER — *09-02-05* — DATE

Washington State Department of Transportation

DATE	REVISION	BY
05/2005	IN SECTION "A", REVISED REFERENCE TO STD. PLAN C-14e	MAS

EFFECTIVE: APRIL 2, 2007 TO JANUARY 6, 2008

EFFECTIVE: APRIL 2, 2007 TO JANUARY 6, 2008

EFFECTIVE: APRIL 2, 2007 TO JANUARY 6, 2008

DRAWN BY: MARK SUJKA

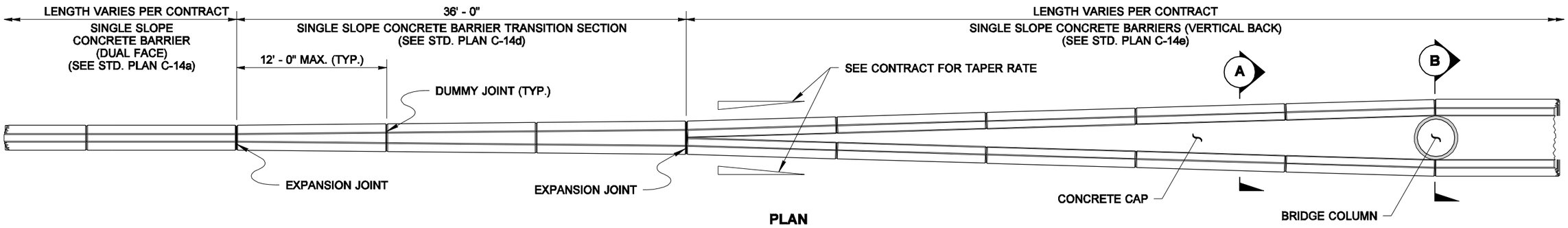

PLAN

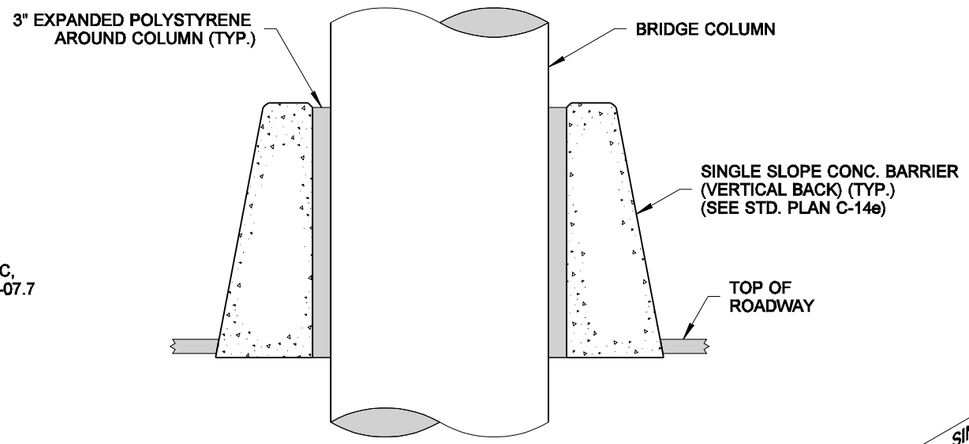

SECTION (B)

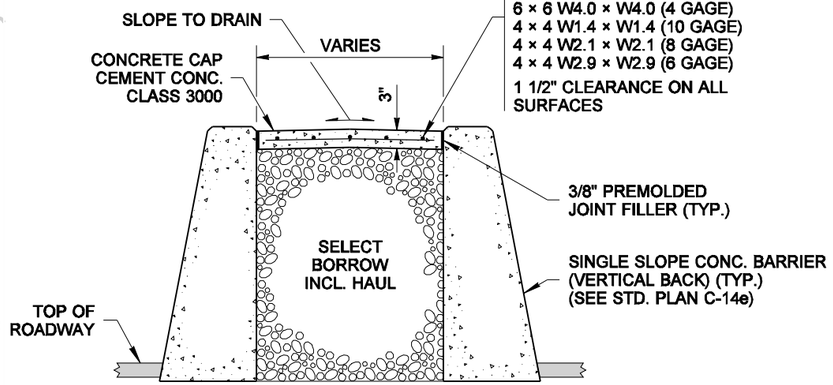

SECTION (A)

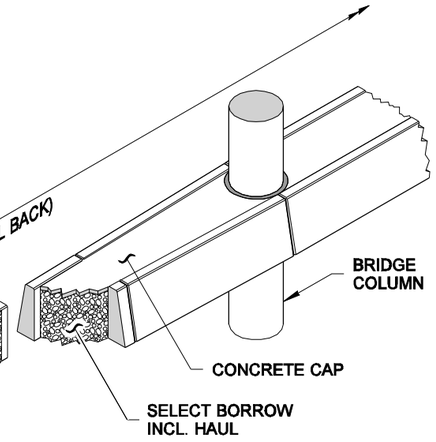

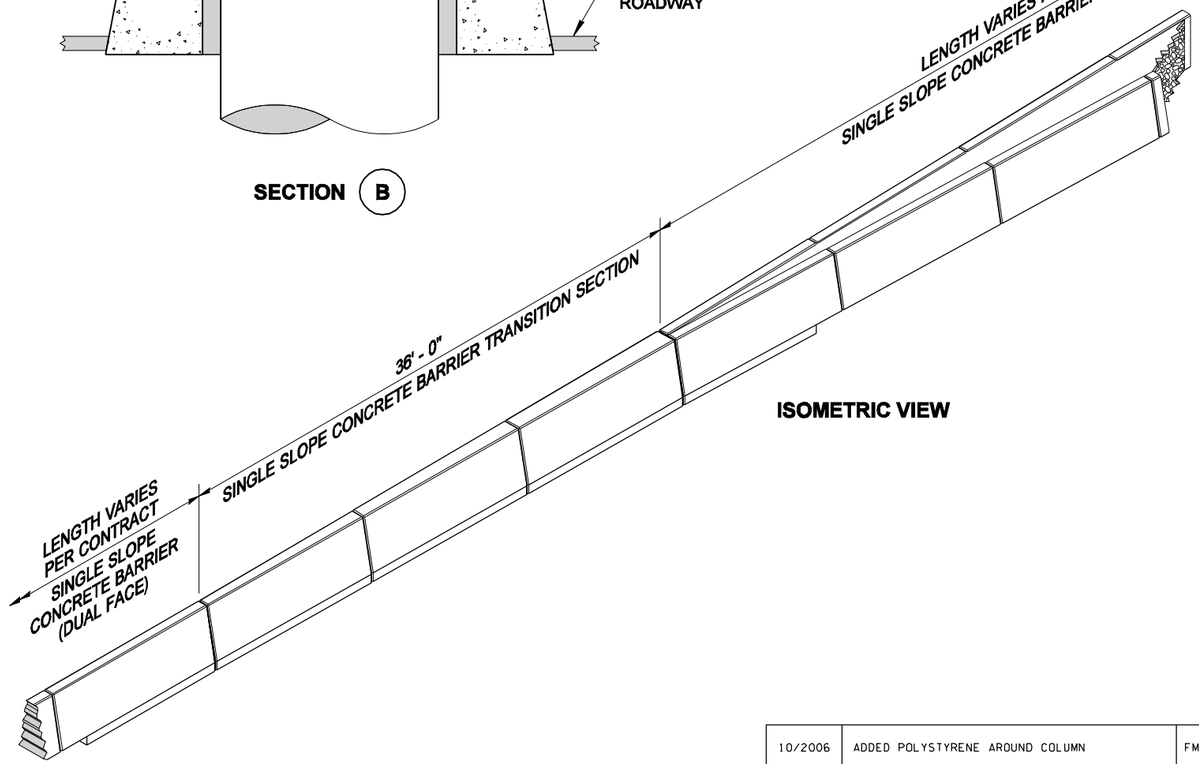

ISOMETRIC VIEW

RICHARD BARSTOW ALBIN
STATE OF WASHINGTON
34042
REGISTERED
PROFESSIONAL ENGINEER

EXPIRES JULY 24, 2008

NOTE: THIS PLAN IS NOT A LEGAL ENGINEERING DOCUMENT BUT AN ELECTRONIC DUPLICATE. THE ORIGINAL, SIGNED BY THE ENGINEER AND APPROVED FOR PUBLICATION, IS KEPT ON FILE AT THE WASHINGTON STATE DEPARTMENT OF TRANSPORTATION. A COPY MAY BE OBTAINED UPON REQUEST.

SINGLE SLOPE CONCRETE BARRIER PLACEMENT
STANDARD PLAN C-14g

SHEET 1 OF 1 SHEET

APPROVED FOR PUBLICATION

Kevin J. Dayton — STATE DESIGN ENGINEER — *11-21-06* — DATE

Washington State Department of Transportation

DATE	REVISION	BY
10/2006	ADDED POLYSTYRENE AROUND COLUMN	FML

EFFECTIVE: APRIL 2, 2007 TO JANUARY 6, 2008

EFFECTIVE: APRIL 2, 2007 TO JANUARY 6, 2008

DRAWN BY: MARK SUJKA

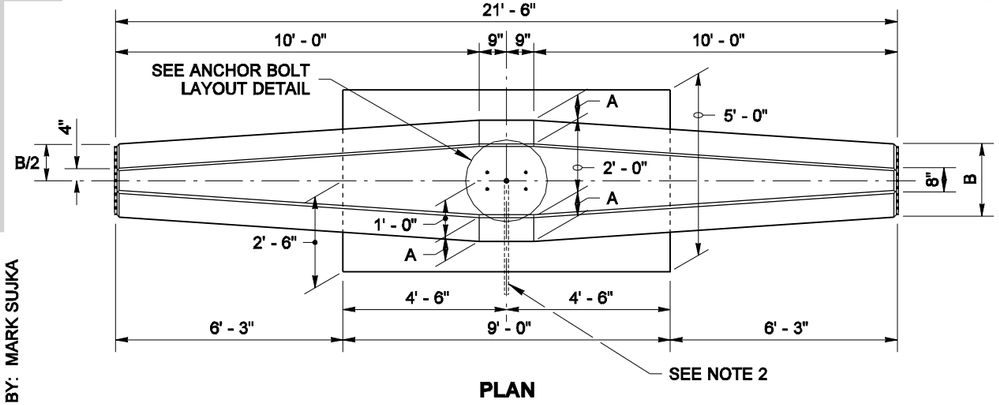

PLAN

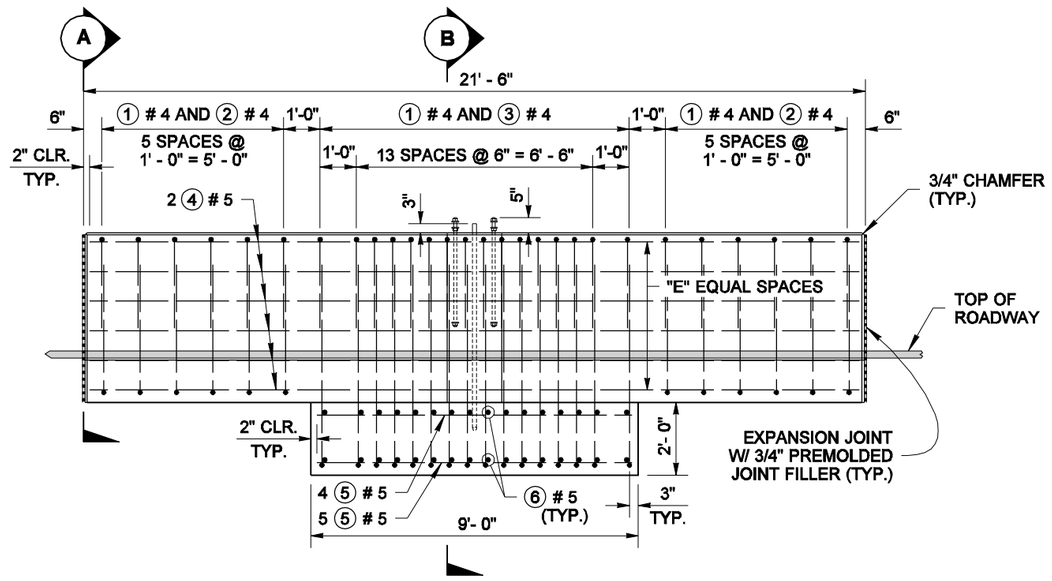

ELEVATION

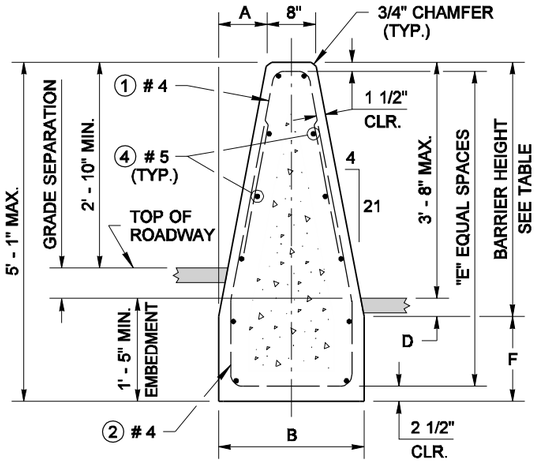

SECTION (A)

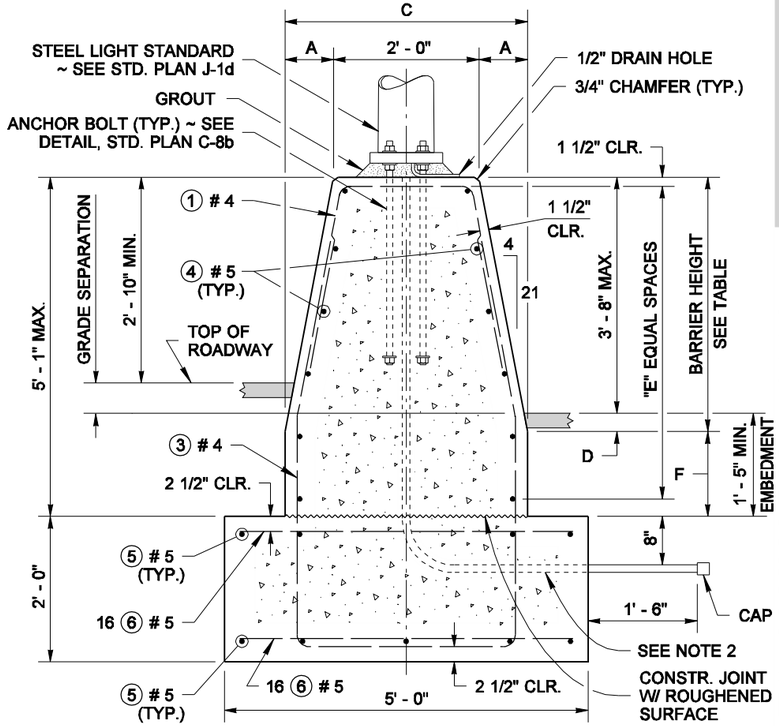

SECTION (B)

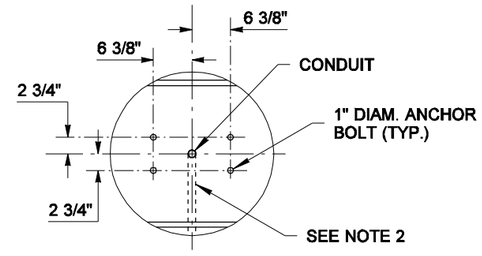

PLAN VIEW

ANCHOR BOLT LAYOUT DETAIL

NOTES

1. When connecting between cast-in-place and precast Single Slope Barrier, provide a slot and rebar grid as shown on Standard Plan C-13.
2. See the Contract Plans for conduit placement.
3. Concrete shall be Class 4000.

ALL DIMENSIONS ARE OUT TO OUT
ALL BENDS ARE 2" RADIUS

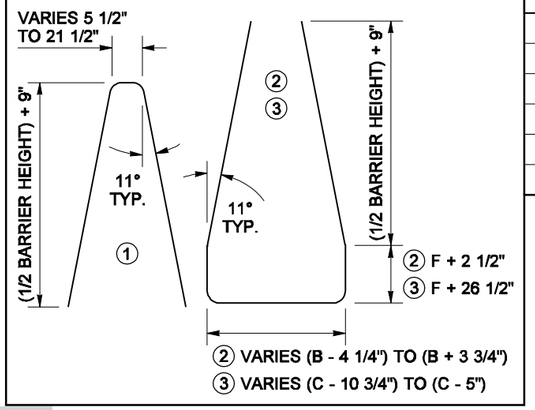

BAR LIST

MARK NO.	LOCATION	SIZE	QUANTITY
①	BARRIER ~ TOP VERTICAL	# 4	28
②	BARRIER ~ BOTTOM VERTICAL	# 4	12
③	FND. & BARRIER ~ VERTICAL	# 4	16
④	BARRIER ~ HORIZONTAL	# 5	"Q"
⑤	FOUNDATION	# 5	9
⑥	FOUNDATION	# 5	32

TABLE

GRADE SEPARATION	BARRIER HEIGHT	A	B	C	D	E	F	Q
0 TO 5"	3' - 6"	8"	2' - 0"	3' - 4"	3" MIN.	5	1' - 2"	12
UP TO 7"	4' - 0"	9 1/8"	2' - 2 1/4"	3' - 6 1/4"	7" MIN.	5	10"	12
UP TO 10"	4' - 6"	10 1/4"	2' - 4 1/2"	3' - 8 1/2"	10" MIN.	6	7"	14

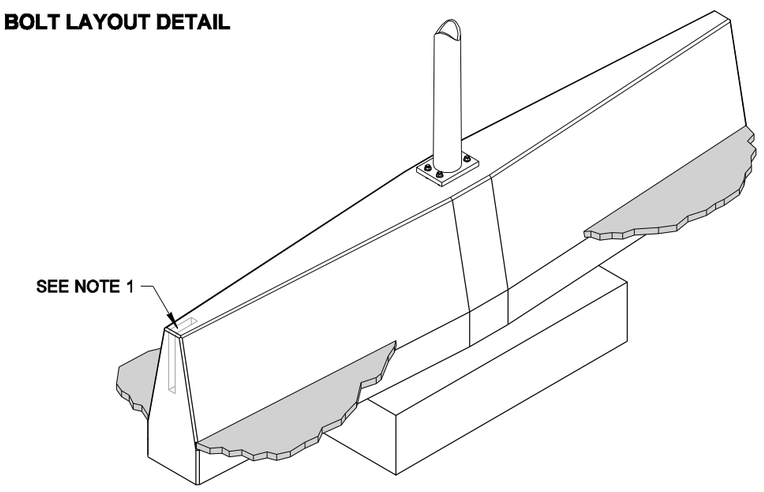

ISOMETRIC VIEW

RICHARD P. ZELDENRUST
STATE OF WASHINGTON
25470
REGISTERED
PROFESSIONAL ENGINEER

EXPIRES NOVEMBER 14, 2006

NOTE: THIS PLAN IS NOT A LEGAL ENGINEERING DOCUMENT BUT AN ELECTRONIC DUPLICATE. THE ORIGINAL, SIGNED BY THE ENGINEER AND APPROVED FOR PUBLICATION, IS KEPT ON FILE AT THE WASHINGTON STATE DEPARTMENT OF TRANSPORTATION. A COPY MAY BE OBTAINED UPON REQUEST.

SINGLE SLOPE CONCRETE BARRIER LIGHT STANDARD FOUNDATION STANDARD PLAN C-14h

SHEET 1 OF 1 SHEET

APPROVED FOR PUBLICATION

Harold J. Peterfeso — STATE DESIGN ENGINEER — *01-11-06* — DATE

Washington State Department of Transportation

EFFECTIVE: APRIL 2, 2007 TO JANUARY 6, 2008

EFFECTIVE: APRIL 2, 2007 TO JANUARY 6, 2008

DRAWN BY: MARK SUJKA

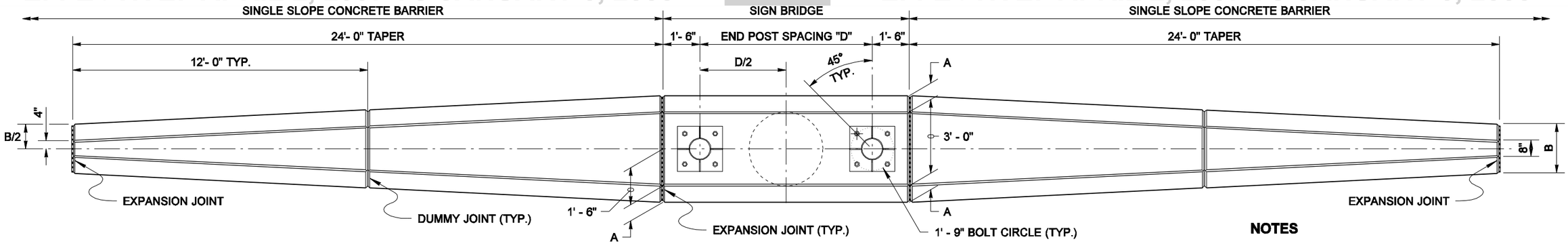

PLAN

NOTES

1. WHEN CONNECTING BETWEEN CAST-IN-PLACE AND PRECAST SINGLE SLOPE BARRIER, PROVIDE A SLOT AND REBAR GRID AS SHOWN IN STANDARD PLAN C-13.
2. CONCRETE SHALL BE CLASS 4000 UNLESS OTHERWISE NOTED.

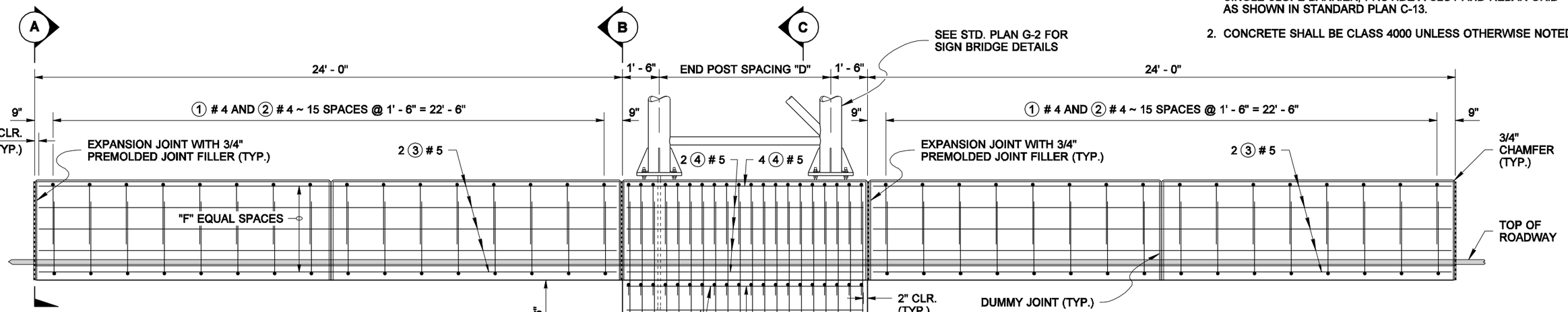

ELEVATION

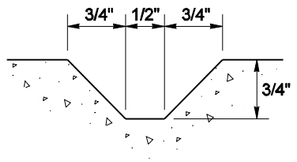

DUMMY JOINT

DIMENSIONS "D" AND "Z"		
SIGN BRIDGE SPAN LENGTH	D	Z
60' OR LESS	4' - 0"	11' - 6"
61' TO 91'	5' - 0"	13' - 6"
91' TO 120'	6' - 0"	15' - 0"
121' TO 150'	7' - 0"	16' - 6"

SHAFT DEPTH "Z" IS BASED ON ALLOWABLE LATERAL BEARING PRESSURE IN EXCESS OF 1500 PSF.

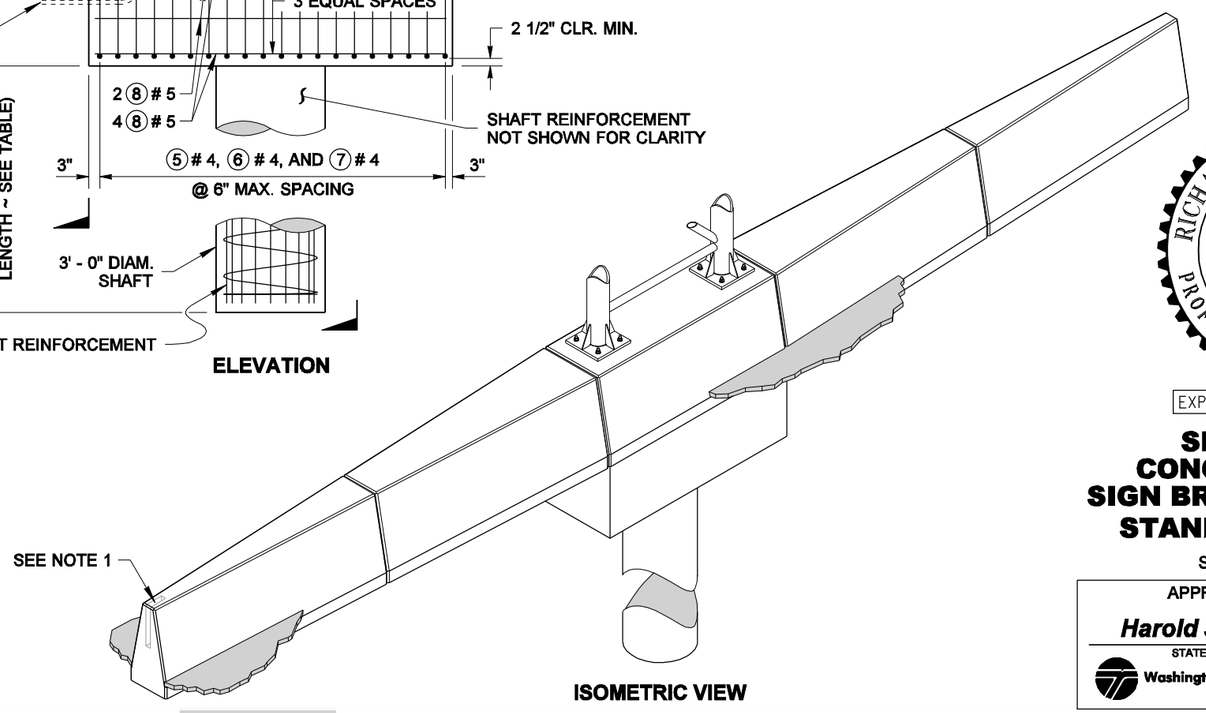

ISOMETRIC VIEW

RICHARD P. ZELDENRUST
STATE OF WASHINGTON
25470
REGISTERED
PROFESSIONAL ENGINEER

EXPIRES NOVEMBER 14, 2004

NOTE: THIS PLAN IS NOT A LEGAL ENGINEERING DOCUMENT BUT AN ELECTRONIC DUPLICATE. THE ORIGINAL, SIGNED BY THE ENGINEER AND APPROVED FOR PUBLICATION, IS KEPT ON FILE AT THE WASHINGTON STATE DEPARTMENT OF TRANSPORTATION. A COPY MAY BE OBTAINED UPON REQUEST.

SINGLE SLOPE CONCRETE BARRIER SIGN BRIDGE FOUNDATION STANDARD PLAN C-14i

SHEET 1 OF 2 SHEETS

APPROVED FOR PUBLICATION

Harold J. Peterfeso — STATE DESIGN ENGINEER — *12-02-03* — DATE

Washington State Department of Transportation

EFFECTIVE: APRIL 2, 2007 TO JANUARY 6, 2008

EFFECTIVE: APRIL 2, 2007 TO JANUARY 6, 2008

DRAWN BY: MARK SUJKA

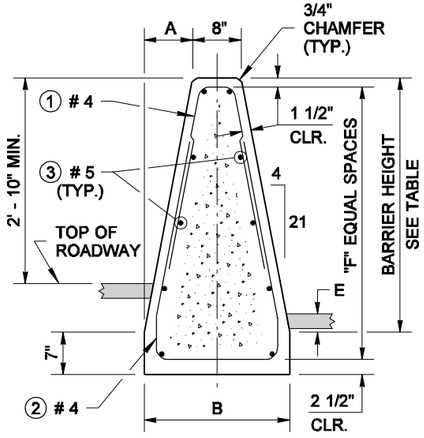

SECTION (A)

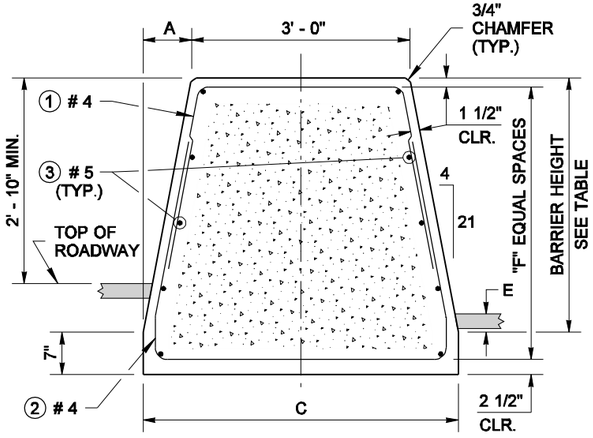

SECTION (B)

ANCHOR BOLT ~ 1" DIAM. × (BARRIER HEIGHT + 4' - 2") LONG, GALV., THREADED ROD OR STUD BAR WITH FOUR HEAVY HEX NUTS AND FOUR WASHERS (TYP.)

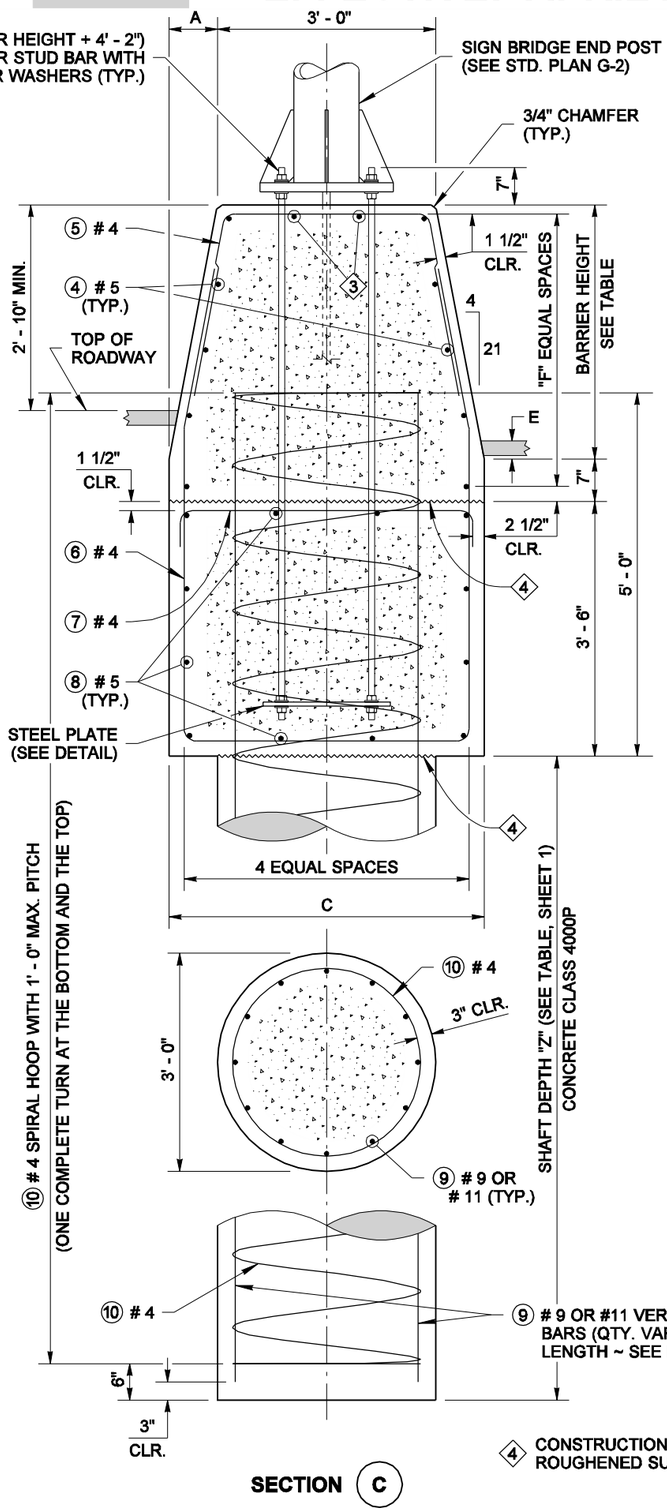

SECTION (C)

④ CONSTRUCTION JOINT WITH ROUGHENED SURFACE

TABLE							
GRADE SEPARATION	BARRIER HEIGHT	A	B	C	E	F	Q
0 TO 5"	3' - 6"	8"	2' - 0"	4' - 4"	3" MIN.	4	10 ◇3
UP TO 7"	4' - 0"	9 1/8"	2' - 2 1/4"	4' - 6 1/4"	7" MIN.	5	12 ◇3
UP TO 10"	4' - 6"	10 1/4"	2' - 4 1/2"	4' - 8 1/2"	10" MIN.	6	14 ◇3

◇3 ADD TWO ④ # 5 BARS, EQUALLY SPACED, AT THE TOP OF THE FOUNDATION BARRIER

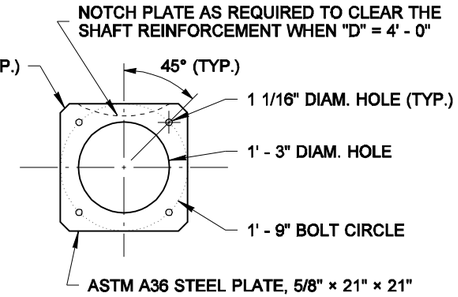

STEEL PLATE DETAIL

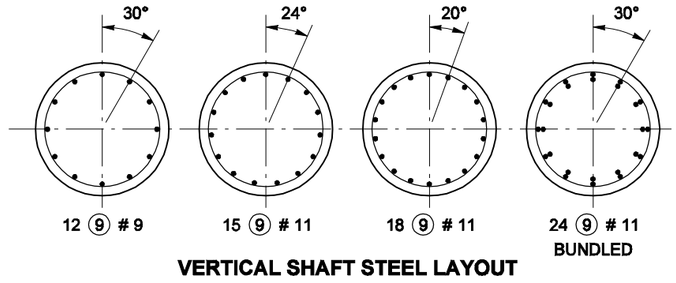

VERTICAL SHAFT STEEL LAYOUT

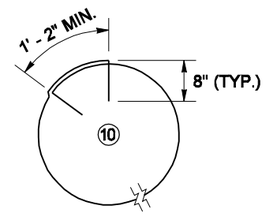

LAP SPLICE DETAIL

BAR LIST									
MARK NO.	LOCATION	SPAN LENGTH							
		60' OR LESS		61' TO 91'		91' TO 120'		121' TO 150'	
		SIZE	QTY.	SIZE	QTY.	SIZE	QTY.	SIZE	QTY.
①	BARRIER ~ TOP VERTICAL	# 4	32	# 4	32	# 4	32	# 4	32
②	BARRIER ~ BOTTOM VERTICAL	# 4	28	# 4	28	# 4	28	# 4	28
③	BARRIER ~ HORIZONTAL	# 5	◇1	# 5	◇1	# 5	◇1	# 5	◇1
④	BARRIER ~ HORIZONTAL	# 5	◇1	# 5	◇1	# 5	◇1	# 5	◇1
⑤	BARRIER ~ TOP VERTICAL	# 4	14	# 4	16	# 4	18	# 4	20
⑥	CAP & BARRIER ~ VERTICAL	# 4	14	# 4	16	# 4	18	# 4	20
⑦	CAP ~ TOP TRANSVERSE	# 4	14	# 4	16	# 4	18	# 4	20
⑧	CAP ~ HORIZONTAL	# 5	12	# 5	12	# 5	12	# 5	12
⑨	SHAFT ~ VERTICAL	# 9	12	# 11	15	# 11	18	# 11	24
⑩	SHAFT ~ SPIRAL	# 4	1 ◇2	# 4	1 ◇2	# 4	1 ◇2	# 4	1 ◇2

◇1 SEE TABLE, THIS SHEET, COLUMN "Q"

◇2 IF JOINING TWO SPIRALS, SEE LAP SPLICE DETAIL

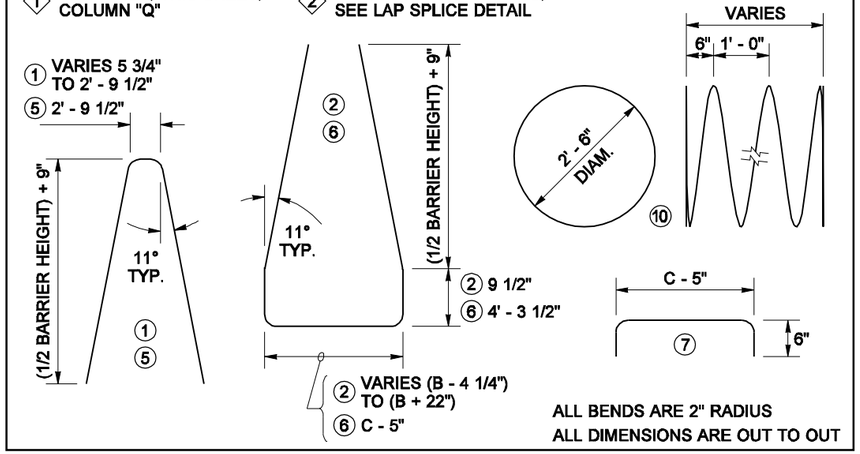

ALL BENDS ARE 2" RADIUS
ALL DIMENSIONS ARE OUT TO OUT

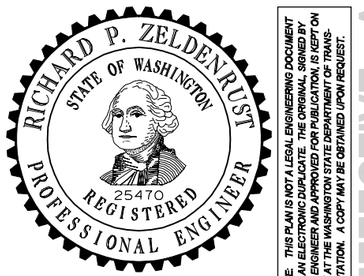

EXPIRES NOVEMBER 14, 2004

NOTE: THIS PLAN IS NOT A LEGAL ENGINEERING DOCUMENT BUT AN ELECTRONIC DUPLICATE. THE ORIGINAL, SIGNED BY THE ENGINEER AND APPROVED FOR PUBLICATION, IS KEPT ON FILE AT THE WASHINGTON STATE DEPARTMENT OF TRANSPORTATION. A COPY MAY BE OBTAINED UPON REQUEST.

SINGLE SLOPE CONCRETE BARRIER SIGN BRIDGE FOUNDATION STANDARD PLAN C-14i

SHEET 2 OF 2 SHEETS

APPROVED FOR PUBLICATION

Harold J. Peterfeso — STATE DESIGN ENGINEER

12-02-03 — DATE

Washington State Department of Transportation

EFFECTIVE: APRIL 2, 2007 TO JANUARY 6, 2008

EFFECTIVE: APRIL 2, 2007 TO JANUARY 6, 2008

DRAWN BY: MARK SUJKA

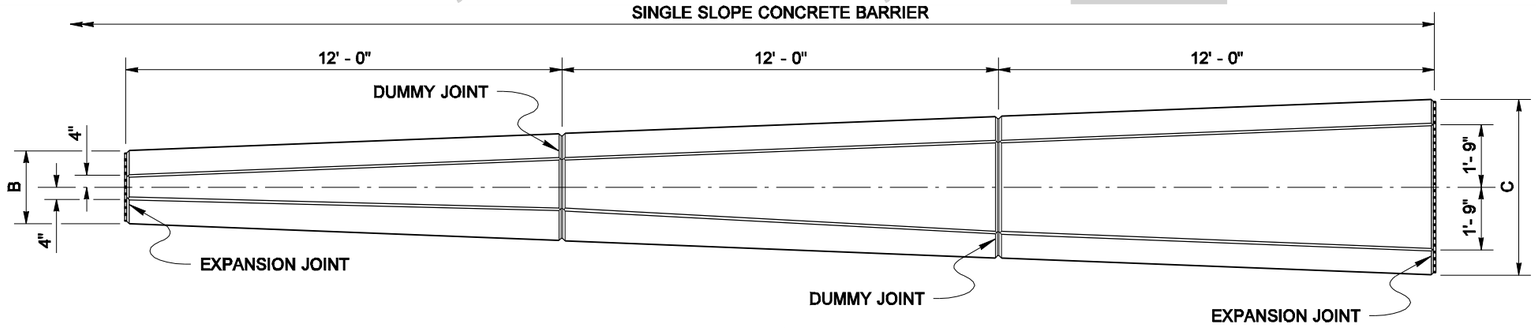

PLAN

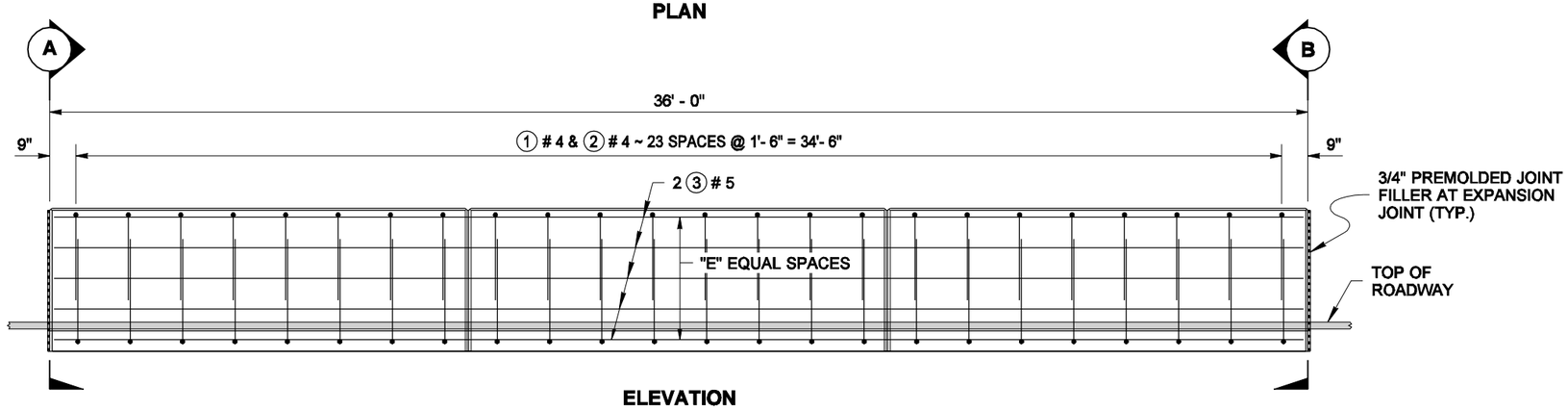

ELEVATION

NOTES

1. WHEN CONNECTING BETWEEN CAST-IN-PLACE AND PRECAST SINGLE SLOPE BARRIER, PROVIDE A SLOT AND REBAR GRID AS SHOWN IN STD. PLAN C-13.
2. ALL CONCRETE SHALL BE CLASS 4000.

BAR LIST

MARK NO.	LOCATION	SIZE	QTY.
①	BARRIER ~ TOP VERTICAL	# 4	24
②	BARRIER ~ BOTTOM VERTICAL	# 4	24
③	BARRIER ~ HORIZONTAL	# 5	◇1

◇1 SEE DIMENSION TABLE ~ NOT COUNTING SPLICES

ALL DIMENSIONS ARE OUT TO OUT
ALL BENDS ARE 2" RADIUS

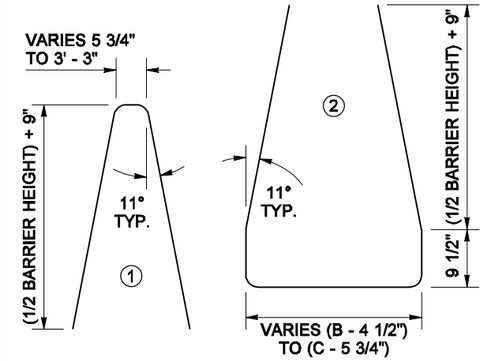

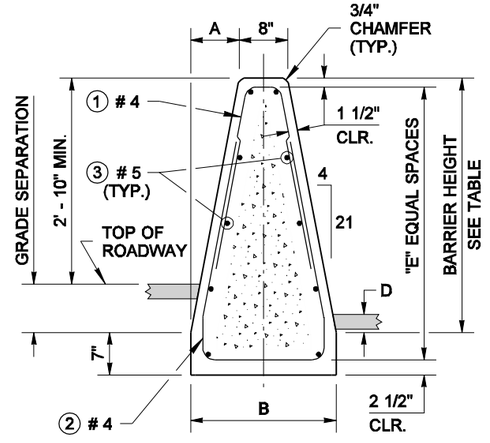

SECTION (A)

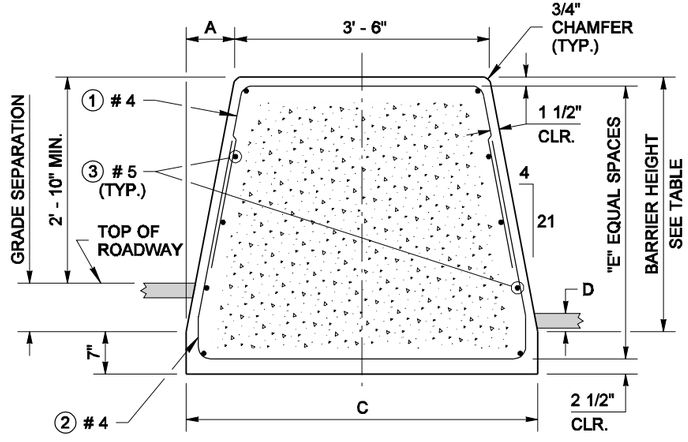

SECTION (B)

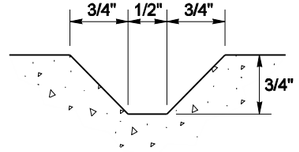

DUMMY JOINT

ISOMETRIC VIEW

TABLE

GRADE SEPARATION	BARRIER HEIGHT	A	B	C	D	E	HORIZONTAL BARS (QTY.)
0 TO 5"	3' - 6"	8"	2' - 0"	4' - 10"	3" MIN.	4	10
UP TO 7"	4' - 0"	9 1/8"	2' - 2 1/4"	5' - 0 1/4"	7" MIN.	5	12
UP TO 10"	4' - 6"	10 1/4"	2' - 4 1/2"	5' - 2 1/2"	10" MIN.	6	14

RICHARD P. ZELDENRUST
STATE OF WASHINGTON
25470
REGISTERED
PROFESSIONAL ENGINEER

EXPIRES NOVEMBER 14, 2004

NOTE: THIS PLAN IS NOT A LEGAL ENGINEERING DOCUMENT BUT AN ELECTRONIC DUPLICATE. THE ORIGINAL, SIGNED BY THE ENGINEER AND APPROVED FOR PUBLICATION, IS KEPT ON FILE AT THE WASHINGTON STATE DEPARTMENT OF TRANSPORTATION. A COPY MAY BE OBTAINED UPON REQUEST.

SINGLE SLOPE CONCRETE BARRIER TRANSITION FOR MONOTUBE SIGN SUPPORT

STANDARD PLAN C-14j

SHEET 1 OF 1 SHEET

APPROVED FOR PUBLICATION

Harold J. Peterfeso — STATE DESIGN ENGINEER — *12-02-03* — DATE

Washington State Department of Transportation

EFFECTIVE: APRIL 2, 2007 TO JANUARY 6, 2008

EFFECTIVE: APRIL 2, 2007 TO JANUARY 6, 2008
EFFECTIVE: APRIL 2, 2007 TO JANUARY 6, 2008

DRAWN BY: BILL BERENS

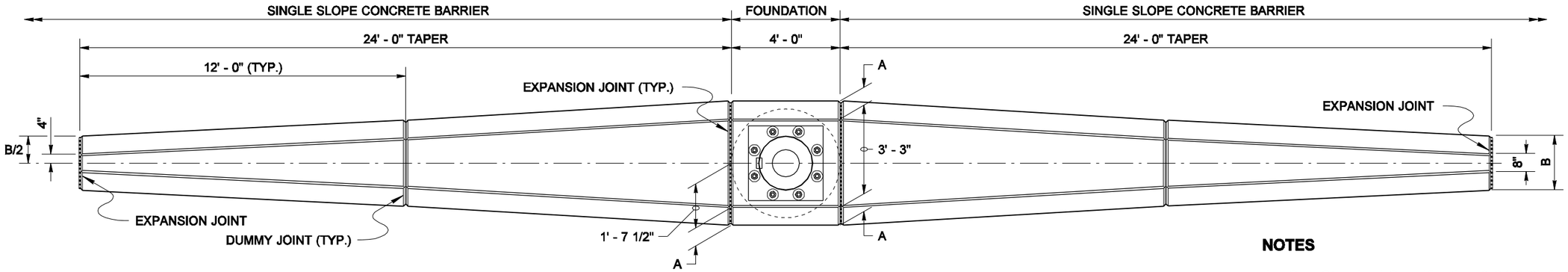

PLAN

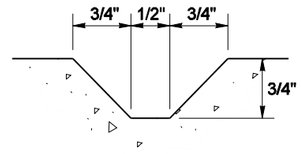

DUMMY JOINT

NOTES

1. See Standard Specification 8-21.3(9) for construction requirements.
2. Use a template to locate and secure the bolts during foundation installation.
3. When connecting between cast-in-place and precast single slope barrier, provide a slot and rebar grid as shown in Standard Plan C-13.

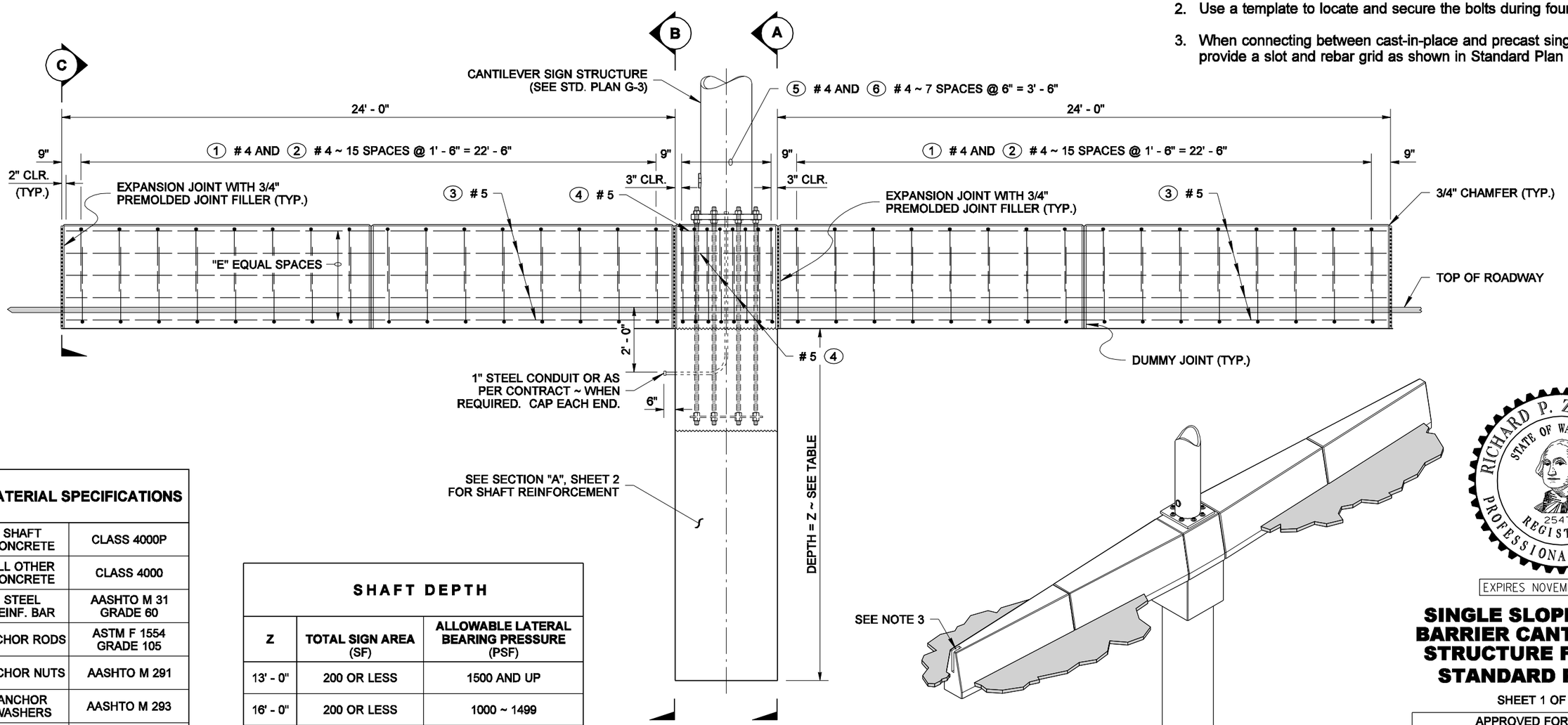

ELEVATION

MATERIAL SPECIFICATIONS	
SHAFT CONCRETE	CLASS 4000P
ALL OTHER CONCRETE	CLASS 4000
STEEL REINF. BAR	AASHTO M 31 GRADE 60
ANCHOR RODS	ASTM F 1554 GRADE 105
ANCHOR NUTS	AASHTO M 291
ANCHOR WASHERS	AASHTO M 293
ANCHORAGE GALVANIZING	AASHTO M 232
STEEL PLATE	ASTM A 36

SHAFT DEPTH		
Z	TOTAL SIGN AREA (SF)	ALLOWABLE LATERAL BEARING PRESSURE (PSF)
13' - 0"	200 OR LESS	1500 AND UP
16' - 0"	200 OR LESS	1000 ~ 1499
18' - 0"	200 ~ 400	1500 AND UP
22' - 0"	200 ~ 400	1000 ~ 1499

ISOMETRIC

EXPIRES NOVEMBER 14, 2006

NOTE: THIS PLAN IS NOT A LEGAL ENGINEERING DOCUMENT BUT AN ELECTRONIC DUPLICATE. THE ORIGINAL, SIGNED BY THE ENGINEER AND APPROVED FOR PUBLICATION, IS KEPT ON FILE AT THE WASHINGTON STATE DEPARTMENT OF TRANSPORTATION. A COPY MAY BE OBTAINED UPON REQUEST.

SINGLE SLOPE CONCRETE BARRIER CANTILEVER SIGN STRUCTURE FOUNDATION STANDARD PLAN C-14k

SHEET 1 OF 2 SHEETS

APPROVED FOR PUBLICATION

Harold J. Peterfeso — STATE DESIGN ENGINEER — *01-11-06* — DATE

Washington State Department of Transportation

EFFECTIVE: APRIL 2, 2007 TO JANUARY 6, 2008
EFFECTIVE: APRIL 2, 2007 TO JANUARY 6, 2008

EFFECTIVE: APRIL 2, 2007 TO JANUARY 6, 2008

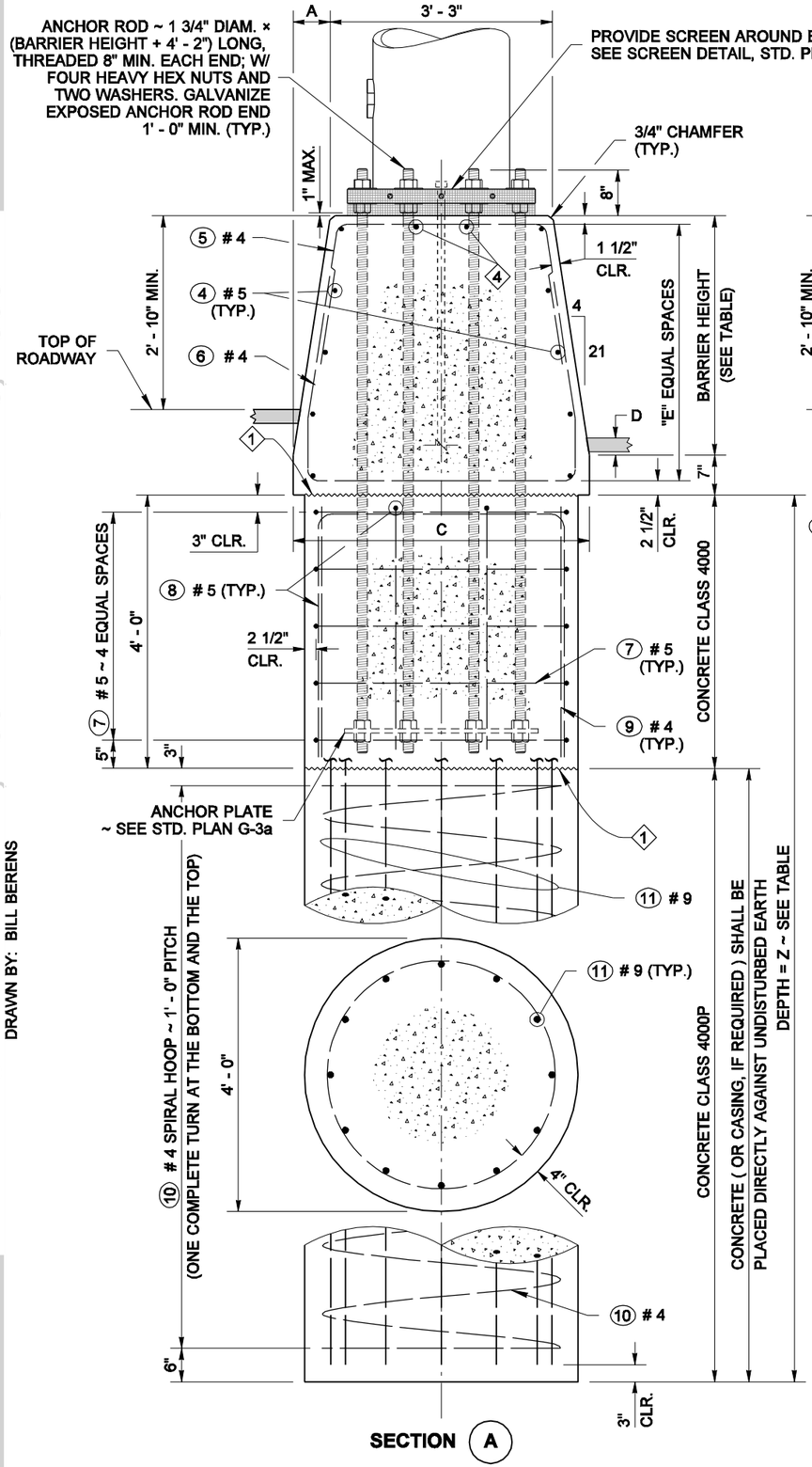

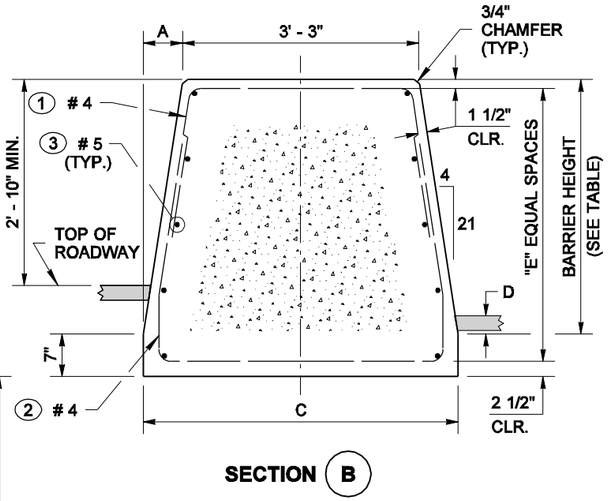

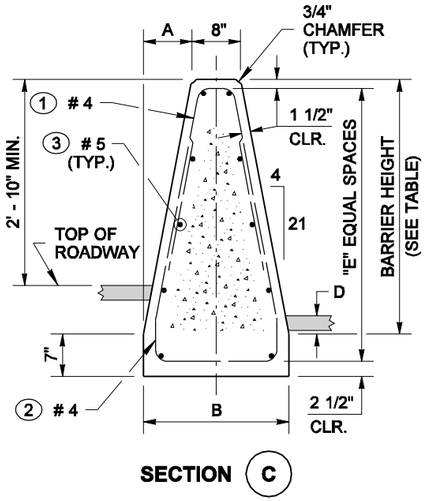

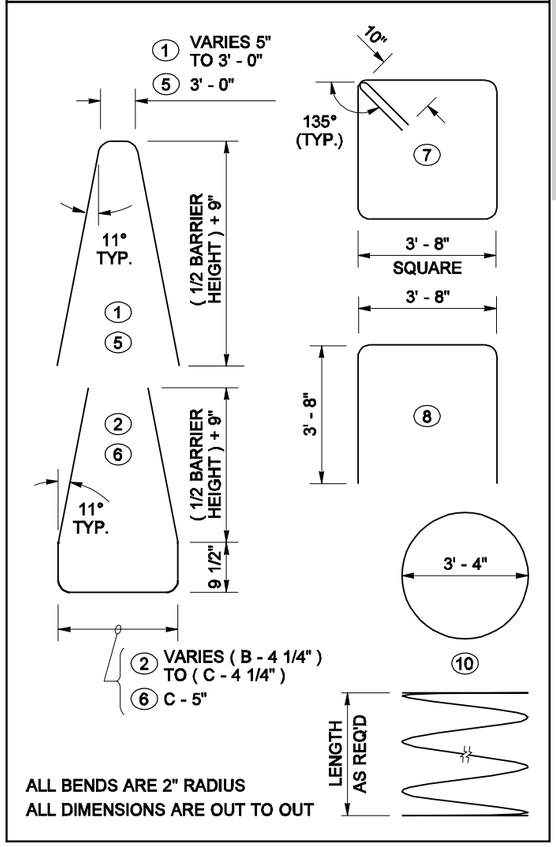

TABLE

GRADE SEPARATION	BARRIER HEIGHT	A	B	C	D	E	Q
0 TO 5"	3' - 6"	8"	2' - 0"	4' - 7"	3" MIN.	4	10 ◇4
UP TO 7"	4' - 0"	9 1/8"	2' - 2 1/4"	4' - 9 1/4"	7" MIN.	5	12 ◇4
UP TO 10"	4' - 6"	10 1/4"	2' - 4 1/2"	4' - 11 1/2"	10" MIN.	6	14 ◇4

BAR LIST

MARK NO.	LOCATION	QTY.	LENGTH	SIZE	TYPE
1	BARRIER ~ TOP VERTICAL	32	VARIES	# 4	
2	BARRIER ~ BOTTOM VERTICAL	32	VARIES	# 4	
3	BARRIER ~ HORIZONTAL	◇2	23' - 8"	# 5	STR.
4	BARRIER ~ HORIZONTAL	◇2	3' - 8"	# 5	STR.
5	BARRIER ~ TOP VERTICAL	8	VARIES	# 4	
6	BARRIER ~ BOTTOM VERTICAL	8	VARIES	# 4	
7	CAP ~ HOOP	5	15' - 9"	# 5	
8	CAP ~ TOP	4	10' - 10"	# 5	
9	CAP ~ VERTICAL, EACH CORNER	4	3' - 4"	# 4	STR.
10	SHAFT ~ SPIRAL	1 ◇3	AS REQ'D	# 4	
11	SHAFT ~ VERTICAL	12	"Z" MINUS CLEARANCES	# 9	STR.

◇1 CONSTRUCTION JOINT WITH ROUGHENED SURFACE

◇2 SEE TABLE, THIS SHEET, COLUMN "Q"

◇3 IF JOINING TWO SPIRALS, SEE LAP SPLICE DETAIL, STD. PLAN G-3a SHEET 2

◇4 ADD TWO (4) #5 BARS, EQUALLY SPACED, AT THE TOP OF THE FOUNDATION BARRIER

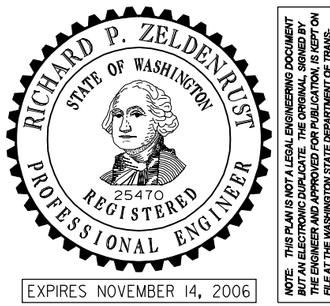

EXPIRES NOVEMBER 14, 2006

NOTE: THIS PLAN IS NOT A LEGAL ENGINEERING DOCUMENT BUT AN ELECTRONIC DUPLICATE. THE ORIGINAL, SIGNED BY THE ENGINEER AND APPROVED FOR PUBLICATION, IS KEPT ON FILE AT THE WASHINGTON STATE DEPARTMENT OF TRANSPORTATION. A COPY MAY BE OBTAINED UPON REQUEST.

SINGLE SLOPE CONCRETE BARRIER CANTILEVER SIGN STRUCTURE FOUNDATION STANDARD PLAN C-14k

SHEET 2 OF 2 SHEETS

APPROVED FOR PUBLICATION

Harold J. Peterfeso — STATE DESIGN ENGINEER — *01-11-06* — DATE

Washington State Department of Transportation

DRAWN BY: BILL BERENS

EFFECTIVE: APRIL 2, 2007 TO JANUARY 6, 2008

EFFECTIVE: APRIL 2, 2007 TO JANUARY 6, 2008

DRAWN BY: BILL BERENS

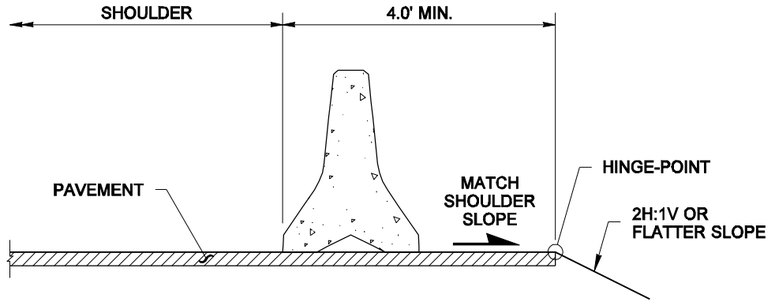

PRECAST CONC. BARRIER TYPE 2

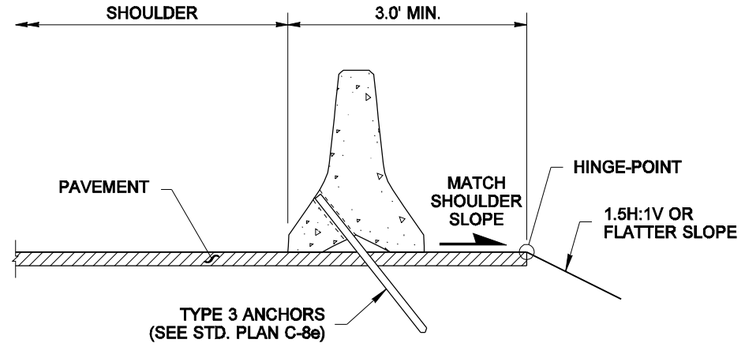

ANCHORED PRECAST CONC. BARRIER TYPE 2

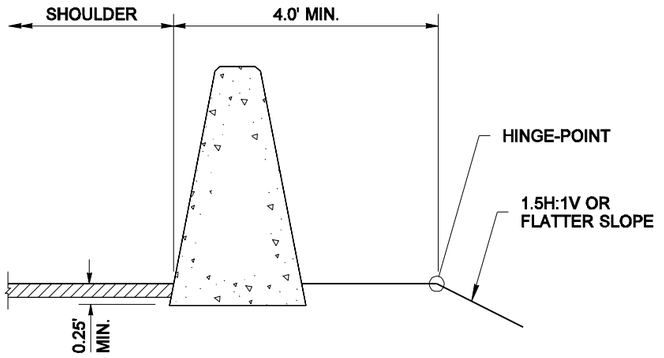

SINGLE SLOPE CONC. BARRIER CAST-IN-PLACE

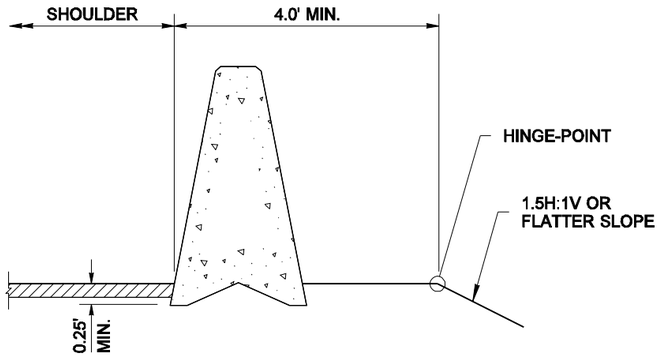

SINGLE SLOPE CONC. BARRIER PRECAST

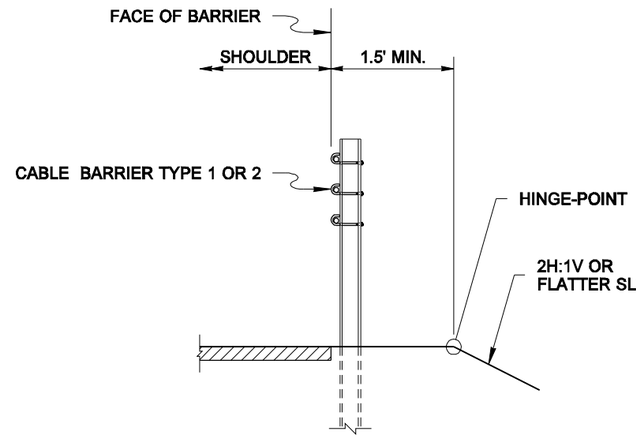

CABLE BARRIER

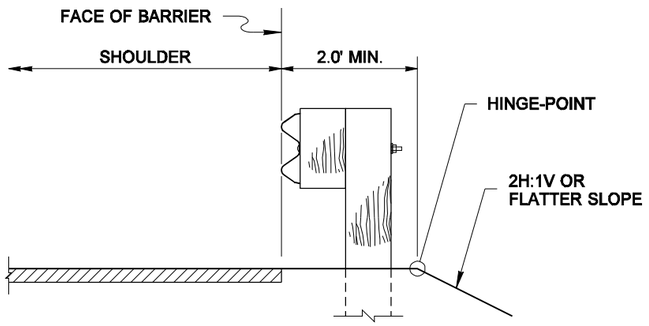

BEAM GUARDRAIL

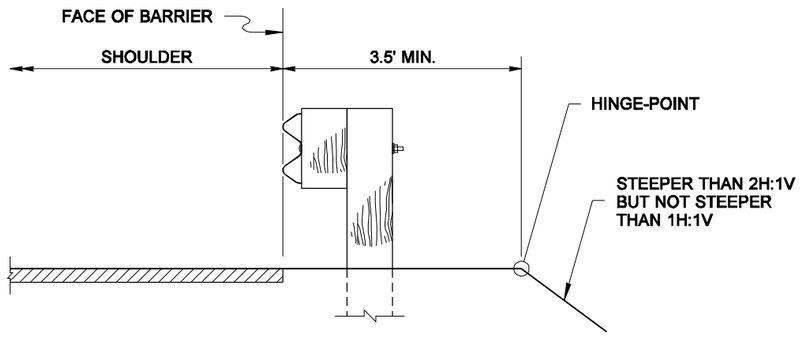

BEAM GUARDRAIL ON STEEP SLOPES

RICHARD BARSTOW ALBIN
STATE OF WASHINGTON
34042
REGISTERED
PROFESSIONAL ENGINEER

EXPIRES JULY 24, 2006

NOTE: THIS PLAN IS NOT A LEGAL ENGINEERING DOCUMENT BUT AN ELECTRONIC DUPLICATE. THE ORIGINAL, SIGNED BY THE ENGINEER AND APPROVED FOR PUBLICATION, IS KEPT ON FILE AT THE WASHINGTON STATE DEPARTMENT OF TRANSPORTATION. A COPY MAY BE OBTAINED UPON REQUEST.

TRAFFIC BARRIER SHOULDER WIDENING ~ FOR SHOULDERS 8.0' AND WIDER
STANDARD PLAN C-16a

SHEET 1 OF 1 SHEET

APPROVED FOR PUBLICATION

Harold J. Peterfeso — STATE DESIGN ENGINEER

11-08-05 — DATE

Washington State Department of Transportation

EFFECTIVE: APRIL 2, 2007 TO JANUARY 6, 2008

EFFECTIVE: APRIL 2, 2007 TO JANUARY 6, 2008
EFFECTIVE: APRIL 2, 2007 TO JANUARY 6, 2008

DRAWN BY: BILL BERENS

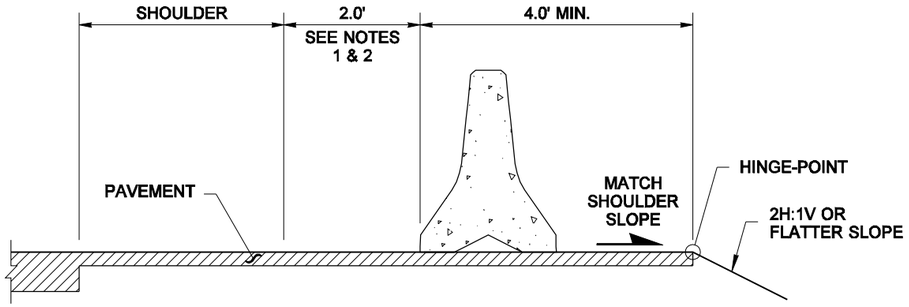

PRECAST CONC. BARRIER TYPE 2

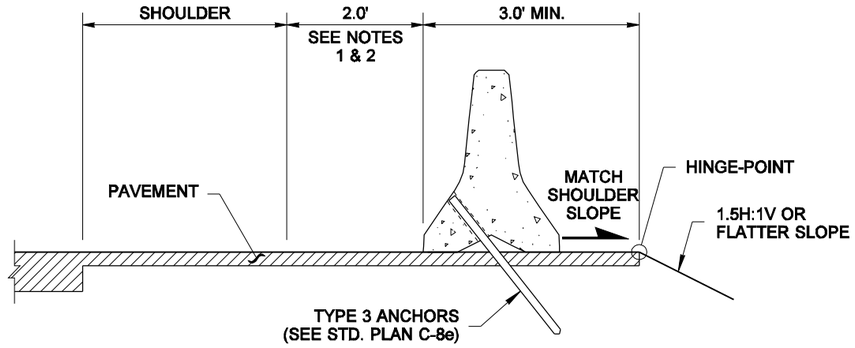

ANCHORED PRECAST CONC. BARRIER TYPE 2

NOTES

1. An additional width for shy distance is required when the existing roadway is to be widened.
2. The additional width for shy distance may be less than 2.0' when it, combined with the existing shoulder width, totals 8.0' or more.

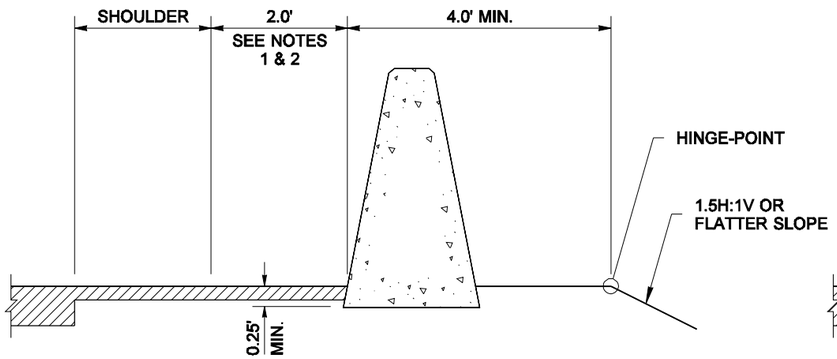

SINGLE SLOPE CONC. BARRIER CAST-IN-PLACE

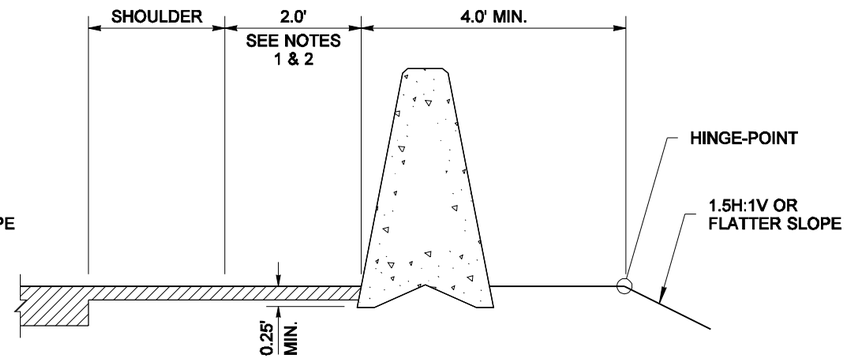

SINGLE SLOPE CONC. BARRIER PRECAST

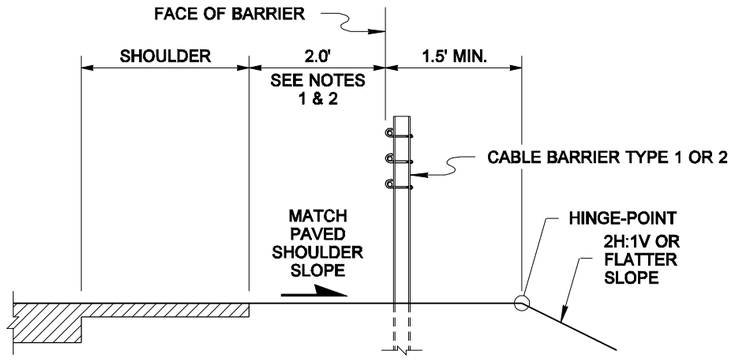

CABLE BARRIER

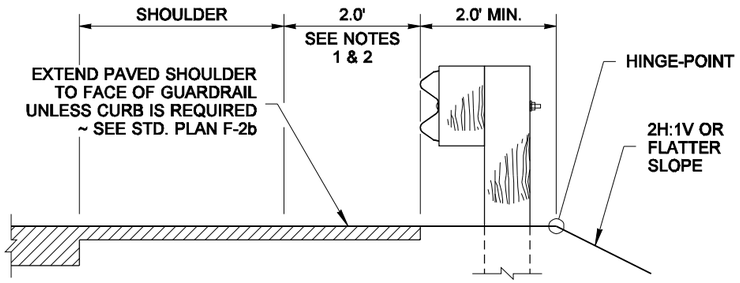

BEAM GUARDRAIL

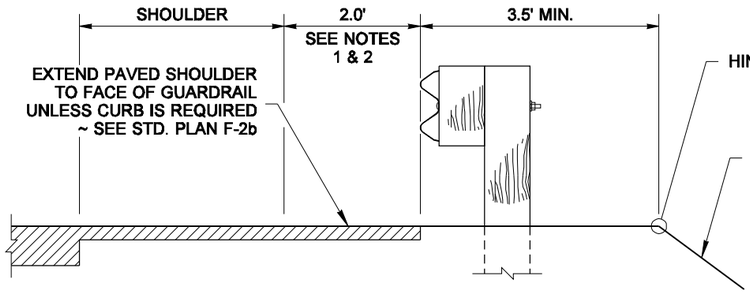

BEAM GUARDRAIL ON STEEP SLOPES

RICHARD BARSTOW ALBIN
STATE OF WASHINGTON
34042
REGISTERED
PROFESSIONAL ENGINEER

EXPIRES JULY 24, 2006

NOTE: THIS PLAN IS NOT A LEGAL ENGINEERING DOCUMENT BUT AN ELECTRONIC DUPLICATE. THE ORIGINAL, SIGNED BY THE ENGINEER AND APPROVED FOR PUBLICATION, IS KEPT ON FILE AT THE WASHINGTON STATE DEPARTMENT OF TRANSPORTATION. A COPY MAY BE OBTAINED UPON REQUEST.

TRAFFIC BARRIER SHOULDER WIDENING ~ FOR SHOULDERS LESS THAN 8.0' WIDE
STANDARD PLAN C-16b

SHEET 1 OF 1 SHEET

APPROVED FOR PUBLICATION

Harold J. Peterfeso — STATE DESIGN ENGINEER — *11-08-05* — DATE

Washington State Department of Transportation

EFFECTIVE: APRIL 2, 2007 TO JANUARY 6, 2008
EFFECTIVE: APRIL 2, 2007 TO JANUARY 6, 2008
EFFECTIVE: APRIL 2, 2007 TO JANUARY 6, 2008

EFFECTIVE: APRIL 2, 2007 TO JANUARY 6, 2008
EFFECTIVE: APRIL 2, 2007 TO JANUARY 6, 2008

DRAWN BY: BILL BERENS

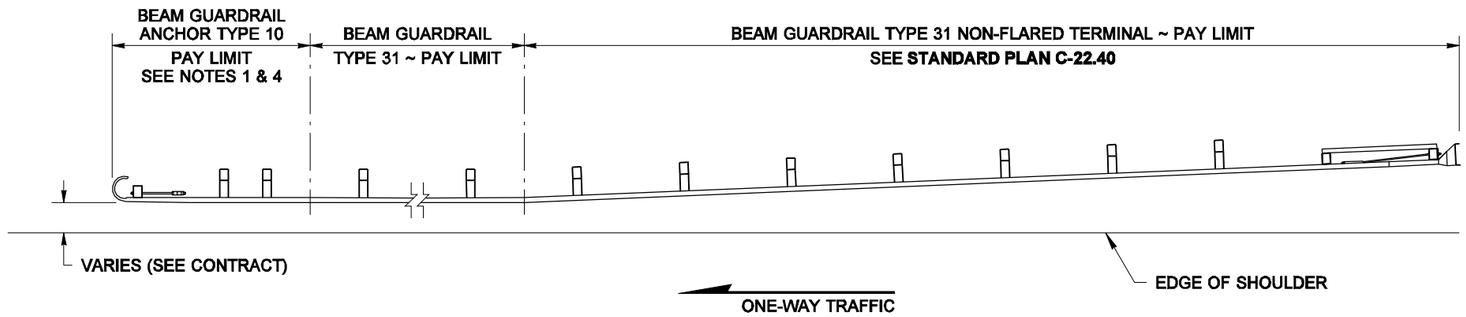

CASE "1A"

NOTES

1. For component details, see **Standard Plan C-23.60**.
2. For terminal type and details, see Contract Plans and applicable drawings.
3. The slope from the edge of the shoulder into the face of the guardrail cannot exceed 10:1 when the face of the guardrail is less than 12'-0" from the edge of the shoulder.
4. For one-way traffic and where a crashworthy terminal is not required, use the Beam Guardrail Anchor Type 10, see **Standard Plan C-23.60**.
5. Where a crashworthy terminal is required use a Beam Guardrail Type 31 Non-Flared Terminal, see **Standard Plan C-22.40**.

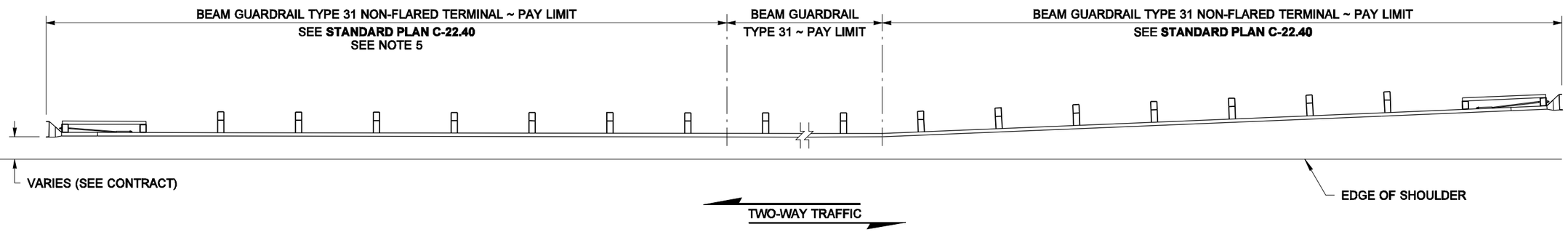

CASE "2A"

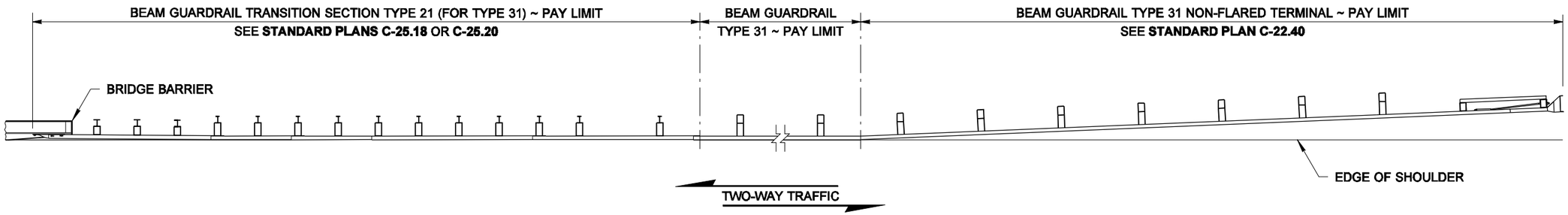

CASE "5A"

RICHARD BARSTOW ALBIN
STATE OF WASHINGTON
34042
REGISTERED
PROFESSIONAL ENGINEER

EXPIRES JULY 24, 2008

NOTE: THIS PLAN IS NOT A LEGAL ENGINEERING DOCUMENT BUT AN ELECTRONIC DUPLICATE. THE ORIGINAL, SIGNED BY THE ENGINEER AND APPROVED FOR PUBLICATION, IS KEPT ON FILE AT THE WASHINGTON STATE DEPARTMENT OF TRANSPORTATION. A COPY MAY BE OBTAINED UPON REQUEST.

BEAM GUARDRAIL TYPE 31 PLACEMENT

STANDARD PLAN C-20.14-00

SHEET 1 OF 1 SHEET

APPROVED FOR PUBLICATION

Ken L. Smith — STATE DESIGN ENGINEER

02-06-07 — DATE

Washington State Department of Transportation

EFFECTIVE: APRIL 2, 2007 TO JANUARY 6, 2008
EFFECTIVE: APRIL 2, 2007 TO JANUARY 6, 2008

EFFECTIVE: APRIL 2, 2007 TO JANUARY 6, 2008

DRAWN BY: BILL BERENS

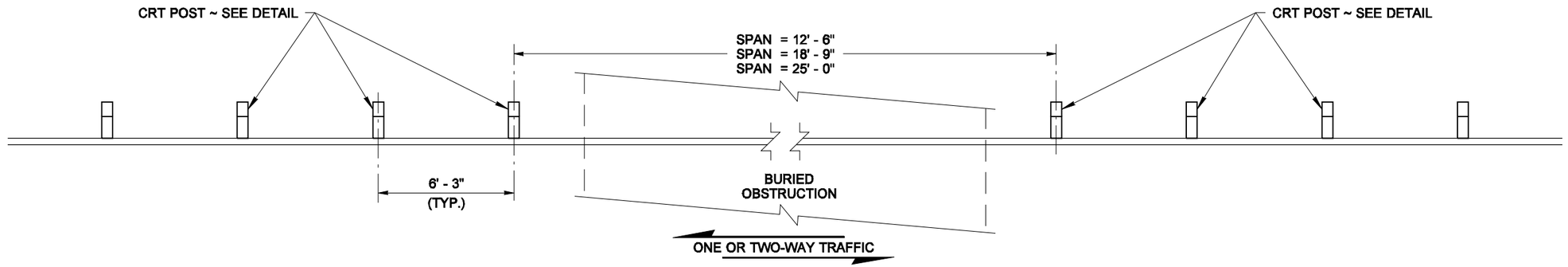

PLAN VIEW

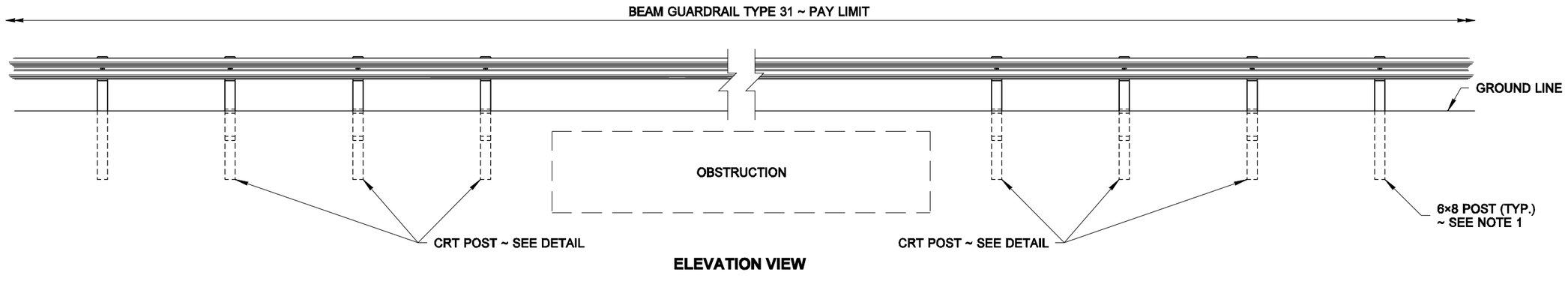

ELEVATION VIEW

NOTE

1. For additional details not shown, see **Standard Plan C-1b**.

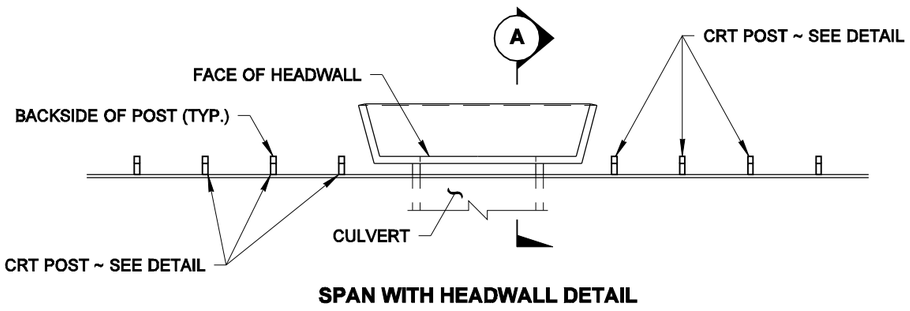

SPAN WITH HEADWALL DETAIL

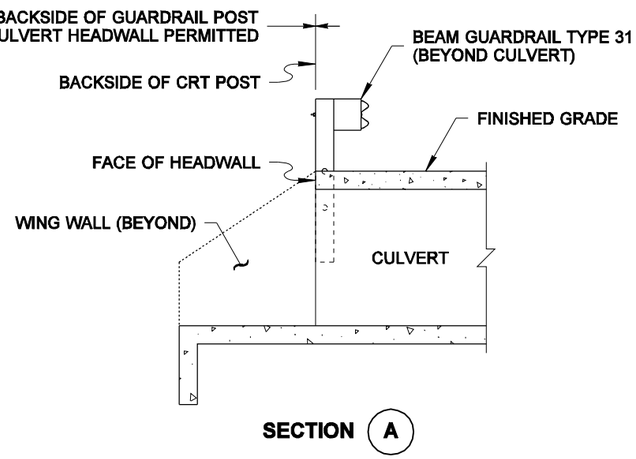

SECTION (A)

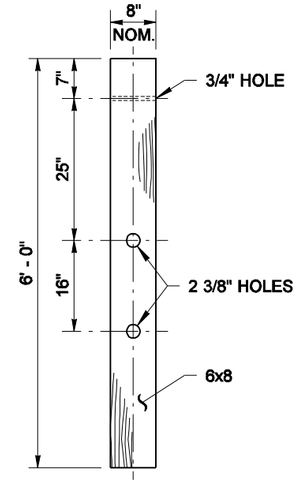

CONTROLLED RELEASING TERMINAL (CRT) POST

RICHARD BARSTOW ALBIN
STATE OF WASHINGTON
34042
REGISTERED
PROFESSIONAL ENGINEER

EXPIRES JULY 24, 2008

NOTE: THIS PLAN IS NOT A LEGAL ENGINEERING DOCUMENT BUT AN ELECTRONIC DUPLICATE. THE ORIGINAL, SIGNED BY THE ENGINEER AND APPROVED FOR PUBLICATION, IS KEPT ON FILE AT THE WASHINGTON STATE DEPARTMENT OF TRANSPORTATION. A COPY MAY BE OBTAINED UPON REQUEST.

BEAM GUARDRAIL TYPE 31 PLACEMENT 12'-6", 18'-9", OR 25'-0" SPAN STANDARD PLAN C-20.40-00

SHEET 1 OF 1 SHEET

APPROVED FOR PUBLICATION

Ken L. Smith — STATE DESIGN ENGINEER — *02-06-07* — DATE

Washington State Department of Transportation

EFFECTIVE: APRIL 2, 2007 TO JANUARY 6, 2008

EFFECTIVE: APRIL 2, 2007 TO JANUARY 6, 2008

DRAWN BY: BILL BERENS

NOTES

1. An ET-PLUS 31 as manufactured by Trinity Industries, Inc. or an SKT-MGS as manufactured by Road Systems Inc. shall be installed according to manufacturer's recommendations.
2. A reflectorized object marker shall be installed according to manufacturer's recommendations.
3. When snow load post washers and snow load rail washers are required by the contract, the snow load rail washers shall not be installed within the terminal limits.
4. Terminal shall be installed at a widening, ensuring that the end piece is entirely off the shoulder.
5. While these terminals do not require an offset at the end, a flare is recommended so that the end piece does not protrude into the shoulder. A maximum flare of 25:1 over the system length of the terminal is allowed for either the ET-PLUS 31 or the SKT-MGS.

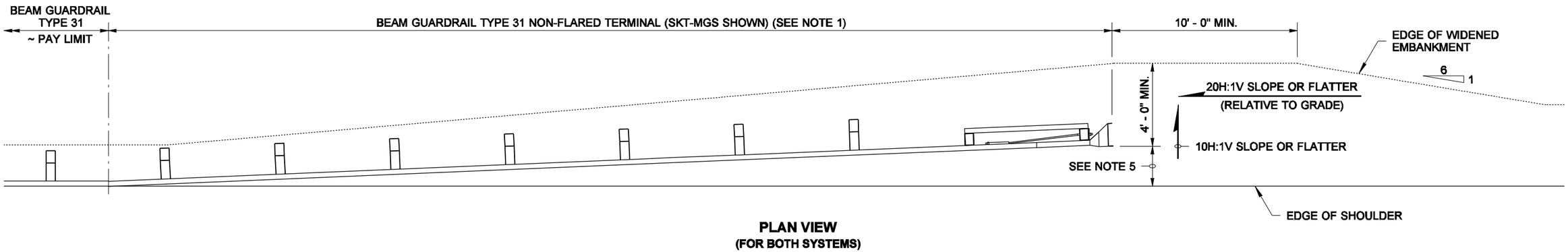

PLAN VIEW
(FOR BOTH SYSTEMS)

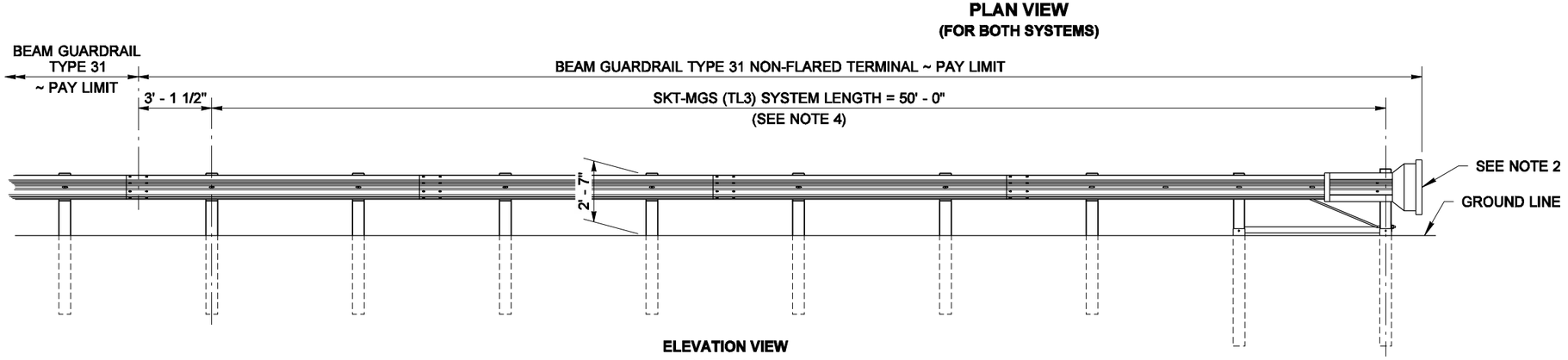

ELEVATION VIEW
SKT-MGS

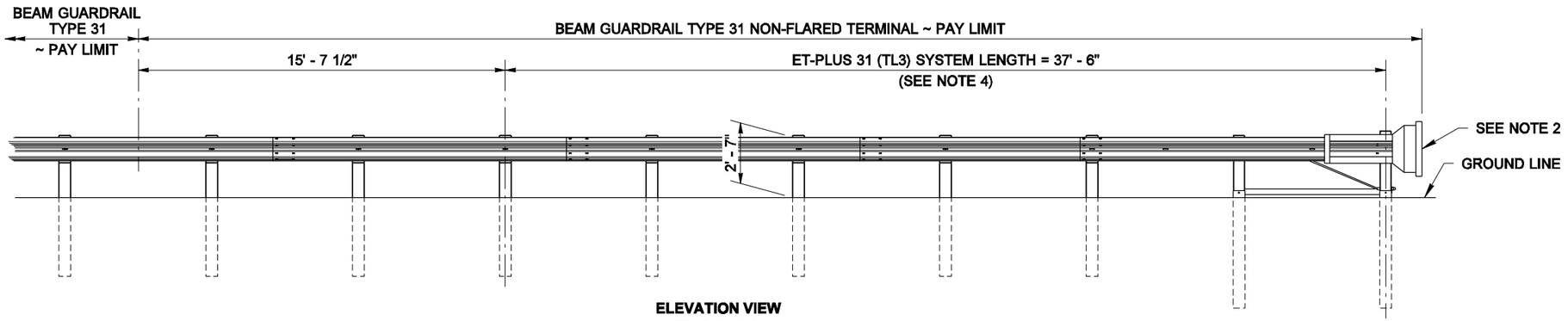

ELEVATION VIEW
ET-PLUS 31

RICHARD BARSTOW ALBIN
STATE OF WASHINGTON
34042
REGISTERED
PROFESSIONAL ENGINEER

EXPIRES JULY 24, 2008

NOTE: THIS PLAN IS NOT A LEGAL ENGINEERING DOCUMENT BUT AN ELECTRONIC DUPLICATE. THE ORIGINAL, SIGNED BY THE ENGINEER AND APPROVED FOR PUBLICATION, IS KEPT ON FILE AT THE WASHINGTON STATE DEPARTMENT OF TRANSPORTATION. A COPY MAY BE OBTAINED UPON REQUEST.

BEAM GUARDRAIL TYPE 31 NON-FLARED TERMINAL

STANDARD PLAN C-22.40-00

SHEET 1 OF 1 SHEET

APPROVED FOR PUBLICATION

Ken L. Smith — STATE DESIGN ENGINEER — *02-06-07* — DATE

Washington State Department of Transportation

EFFECTIVE: APRIL 2, 2007 TO JANUARY 6, 2008

EFFECTIVE: APRIL 2, 2007 TO JANUARY 6, 2008

DRAWN BY: BILL BERENS

NOTES

1. For use on the end of guardrail runs when a crashworthy terminal is not required.
2. For additional details not shown, see **Standard Plan C-6c**.
3. For End Section details, see **Standard Plan C-7**.
4. For Anchor Post Assembly details, see **Standard Plan C-1b**. Use detail on this plan for Wood Breakaway Post. (No Block on this post).
5. Fasten the Anchor Cable using two 1" nuts and washer, at both ends of cable. Outside nut shall be torqued against inside nut a minimum of 100 ft.-lbs.
6. Posts shall match those of connecting run: Timber or Steel.

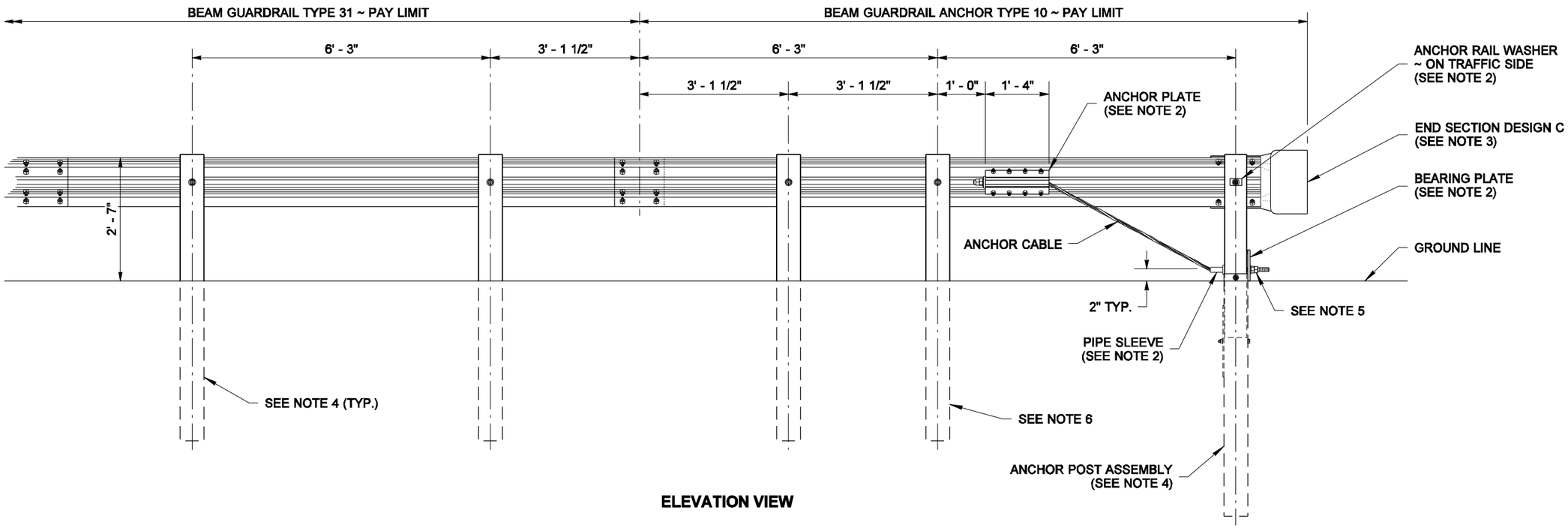

ELEVATION VIEW

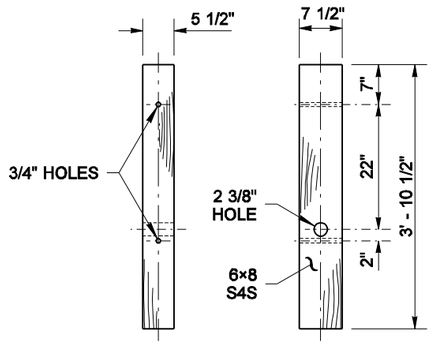

WOOD BREAKAWAY POST DETAIL

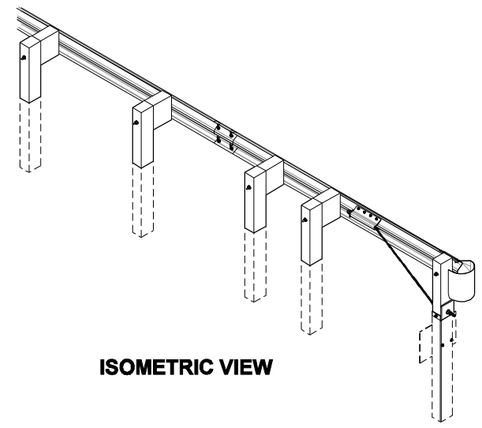

ISOMETRIC VIEW

RICHARD BARSTOW ALBIN
STATE OF WASHINGTON
34042
REGISTERED
PROFESSIONAL ENGINEER

EXPIRES JULY 24, 2008

NOTE: THIS PLAN IS NOT A LEGAL ENGINEERING DOCUMENT BUT AN ELECTRONIC DUPLICATE. THE ORIGINAL, SIGNED BY THE ENGINEER AND APPROVED FOR PUBLICATION, IS KEPT ON FILE AT THE WASHINGTON STATE DEPARTMENT OF TRANSPORTATION. A COPY MAY BE OBTAINED UPON REQUEST.

BEAM GUARDRAIL (TYPE 31) ANCHOR TYPE 10

STANDARD PLAN C-23.60-00

SHEET 1 OF 1 SHEET

APPROVED FOR PUBLICATION

Ken L. Smith — STATE DESIGN ENGINEER

02-06-07 — DATE

Washington State Department of Transportation

EFFECTIVE: APRIL 2, 2007 TO JANUARY 6, 2008

EFFECTIVE: APRIL 2, 2007 TO JANUARY 6, 2008

DRAWN BY: BILL BERENS

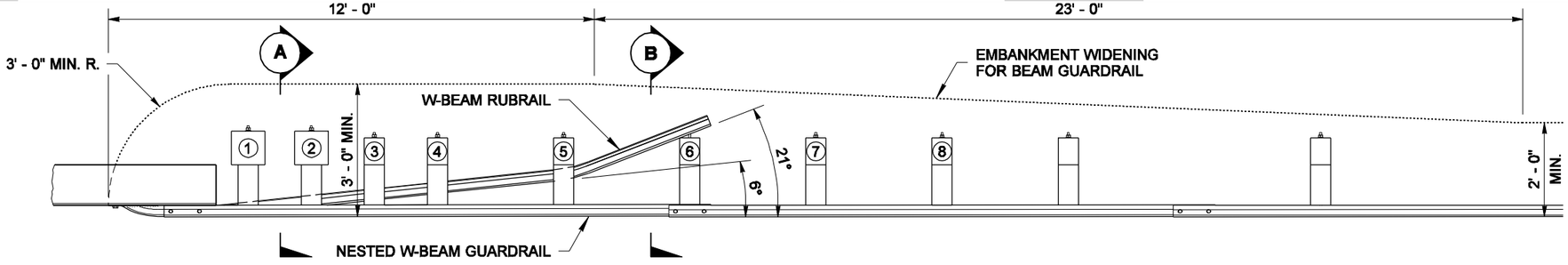

PLAN VIEW

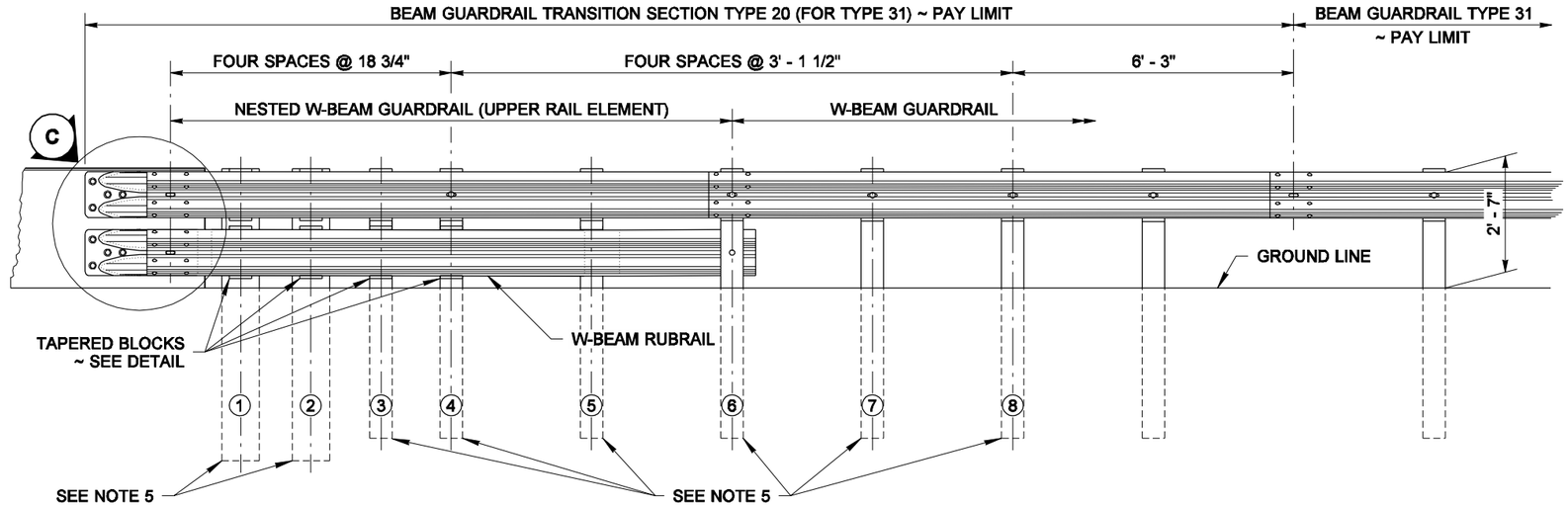

ELEVATION VIEW

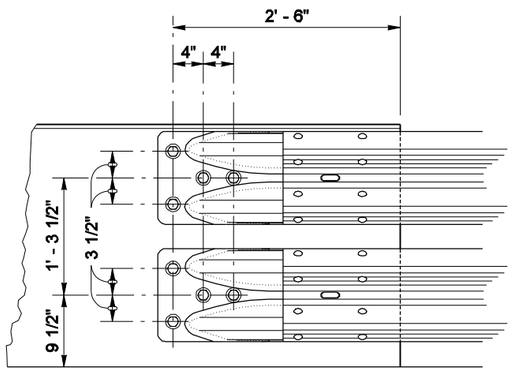

DETAIL C

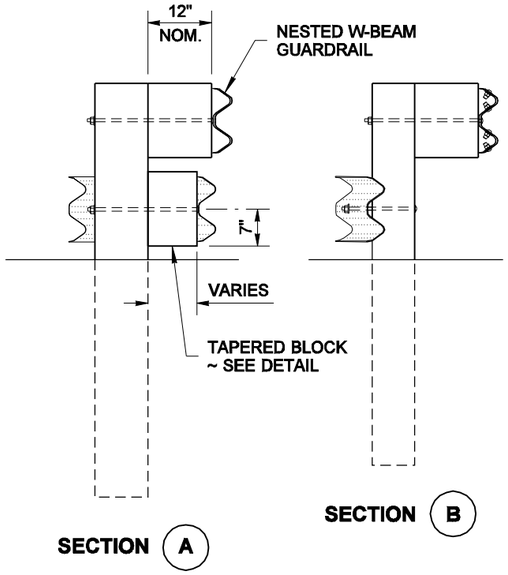

SECTION B

SECTION A

NOTES

1. This guardrail transition is for connection to a vertical concrete shape or single slope barrier and cannot be connected directly to a concrete safety shape.
2. Do not bolt nested W-Beam or rubrail W-Beam to posts and blocks on posts 1,2,3 and 5. Bolt tapered blocks directly to posts.
3. The rubrail W-Beam can be shop bent to facilitate installation.
4. Posts 1,2,3,4 and 6 require an additional hole to attach tapered blocks and/or rubrail.
5. Posts 1 and 2 are 10×10 wood or W8×13 steel posts ~ 7' - 6" long. Posts 3, 4, 5, 6, 7 and 8 are 6×8 wood or W6×9 steel posts ~ 6' - 0" long.

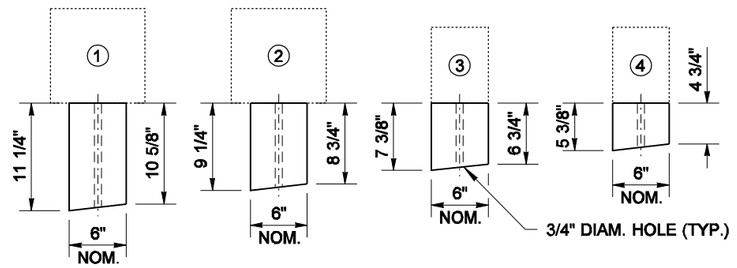

PLAN VIEW

TAPERED BLOCKS FOR RUBRAIL DETAIL

14" LONG (TYP.)

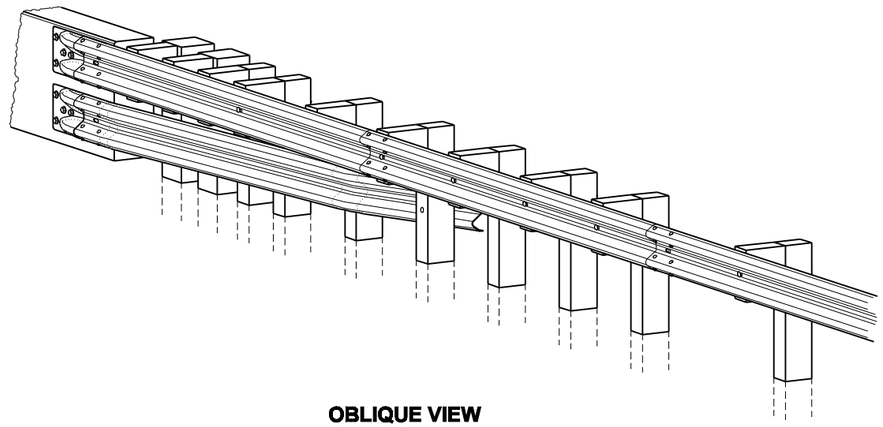

OBLIQUE VIEW

RICHARD BARSTOW ALBIN
STATE OF WASHINGTON
34042
REGISTERED
PROFESSIONAL ENGINEER

EXPIRES JULY 24, 2008

NOTE: THIS PLAN IS NOT A LEGAL ENGINEERING DOCUMENT BUT AN ELECTRONIC DUPLICATE. THE ORIGINAL, SIGNED BY THE ENGINEER AND APPROVED FOR PUBLICATION, IS KEPT ON FILE AT THE WASHINGTON STATE DEPARTMENT OF TRANSPORTATION. A COPY MAY BE OBTAINED UPON REQUEST.

BEAM GUARDRAIL (TYPE 31) TRANSITION SECTION TYPE 20

STANDARD PLAN C-25.18-00

SHEET 1 OF 1 SHEET

APPROVED FOR PUBLICATION

Ken L. Smith — STATE DESIGN ENGINEER

02-06-07 — DATE

Washington State Department of Transportation

EFFECTIVE: APRIL 2, 2007 TO JANUARY 6, 2008

EFFECTIVE: APRIL 2, 2007 TO JANUARY 6, 2008
EFFECTIVE: APRIL 2, 2007 TO JANUARY 6, 2008

NOTE

1. This guardrail transition is for connection to a vertical concrete shape, a single slope, or an F-shape barrier. The toe of the F-shaped barrier shall be tapered so that it does not project past the face of the approach guardrail.

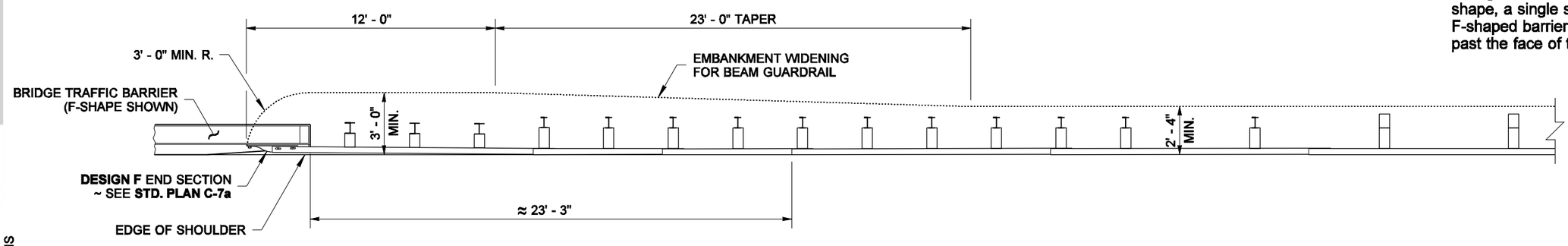

PLAN VIEW

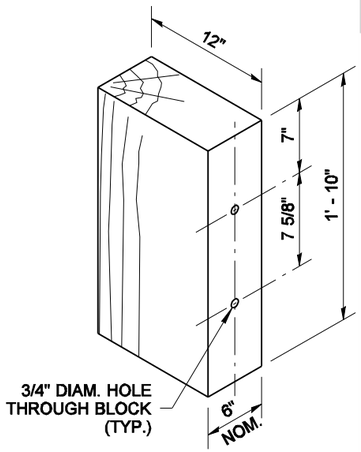

THRIE BEAM WOOD BLOCK

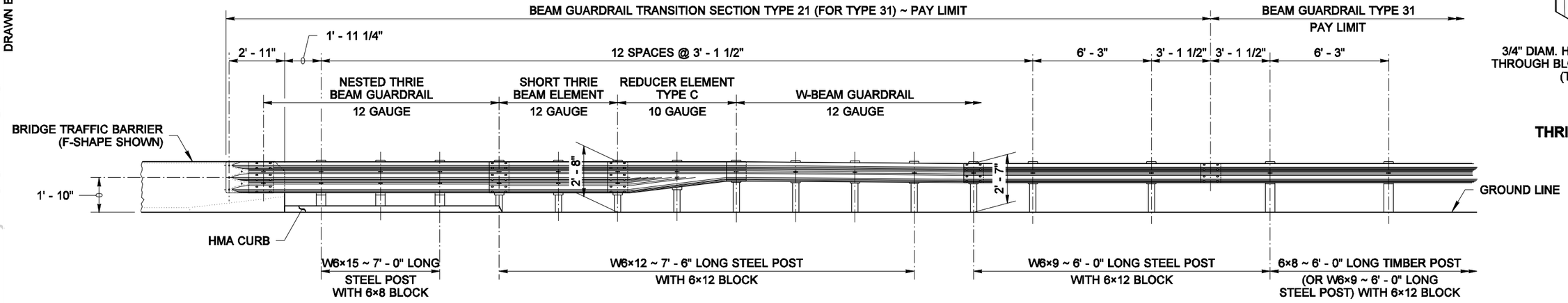

ELEVATION VIEW

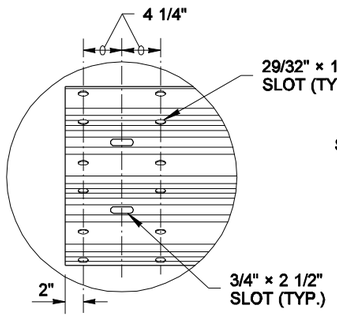

DETAIL (A)

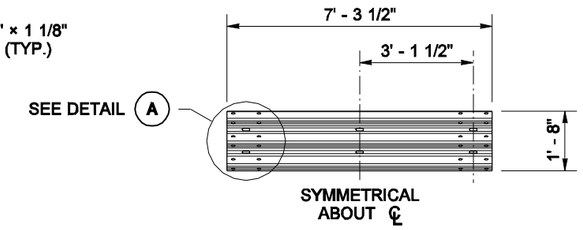

SHORT THRIE BEAM ELEMENT

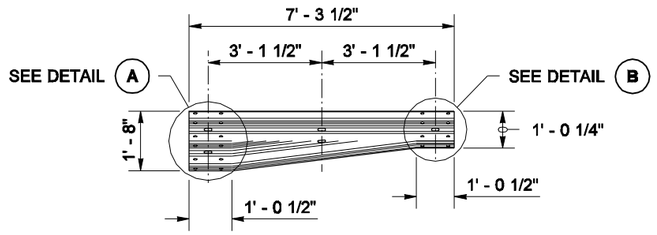

REDUCER ELEMENT
TYPE C

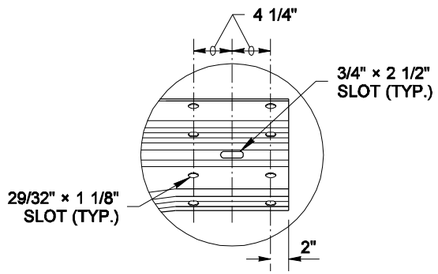

DETAIL (B)

RICHARD BARSTOW ALBIN
STATE OF WASHINGTON
34042
REGISTERED
PROFESSIONAL ENGINEER

EXPIRES JULY 24, 2008

NOTE: THIS PLAN IS NOT A LEGAL ENGINEERING DOCUMENT BUT AN ELECTRONIC DUPLICATE. THE ORIGINAL, SIGNED BY THE ENGINEER AND APPROVED FOR PUBLICATION, IS KEPT ON FILE AT THE WASHINGTON STATE DEPARTMENT OF TRANSPORTATION. A COPY MAY BE OBTAINED UPON REQUEST.

BEAM GUARDRAIL (TYPE 31) TRANSITION SECTION TYPE 21

STANDARD PLAN C-25.20-00

SHEET 1 OF 1 SHEET

APPROVED FOR PUBLICATION

Ken L. Smith — STATE DESIGN ENGINEER — *02-06-07* — DATE

Washington State Department of Transportation

DRAWN BY: BILL BERENS

EFFECTIVE: APRIL 2, 2007 TO JANUARY 6, 2008
EFFECTIVE: APRIL 2, 2007 TO JANUARY 6, 2008

EFFECTIVE: APRIL 2, 2007 TO JANUARY 6, 2008
EFFECTIVE: APRIL 2, 2007 TO JANUARY 6, 2008

DRAWN BY: BILL BERENS

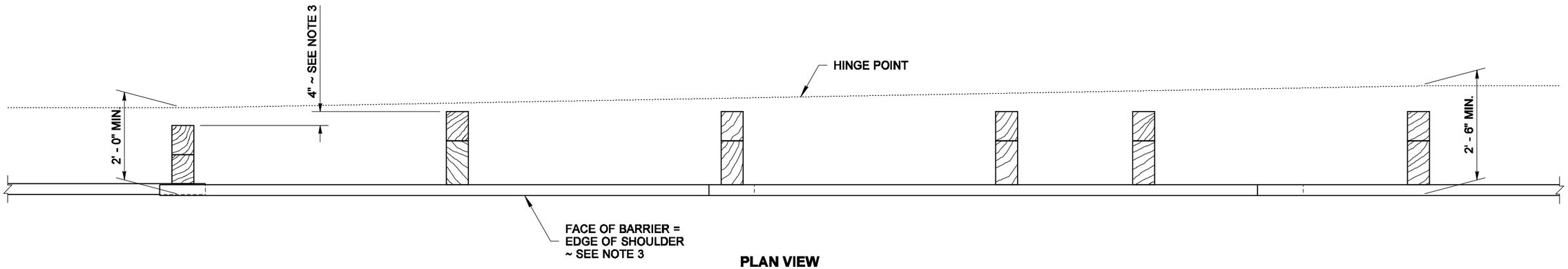

PLAN VIEW

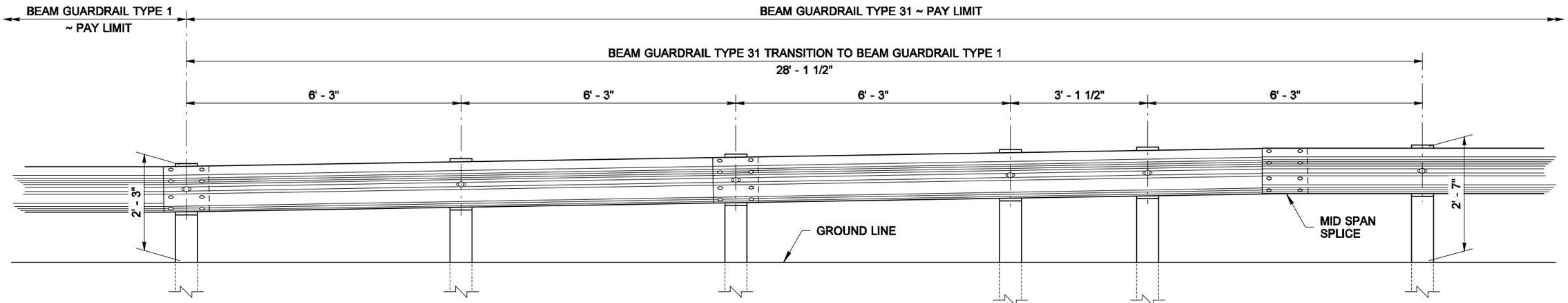

ELEVATION VIEW ~ PROFILE TAPER

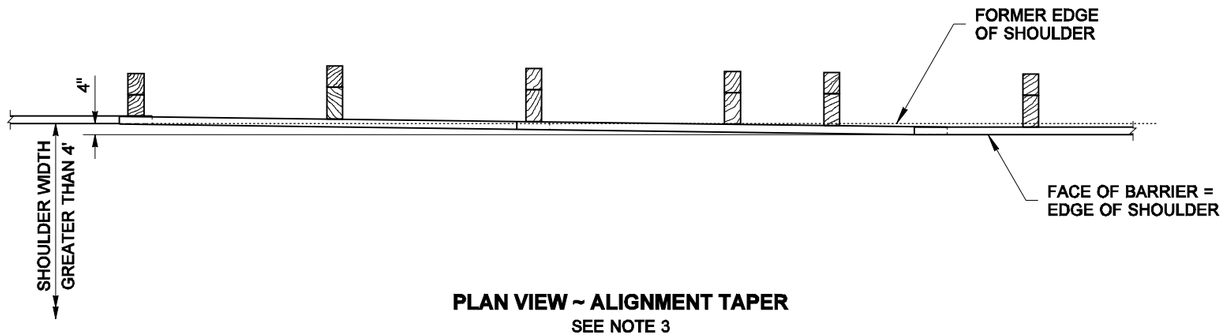

PLAN VIEW ~ ALIGNMENT TAPER
SEE NOTE 3

NOTES

1. Refer to **Standard Plan C-1** and **C-1b** for component details for Beam Guardrail Type 1 not shown on this plan.
2. Refer to **Standard Plan C-25.40** for component details for Beam Guardrail Type 31 not shown on this plan.
3. Where post off-set is constrained, and when the existing shoulder will not be widened and is wider than 4 feet, the existing shoulder may be reduced up to 4" to accomodate the 12" blockouts of the Beam Guardrail Type 31. See **PLAN VIEW ~ ALIGNMENT TAPER**.
4. All posts for any standard barrier run shall be of the same type: Timber or Steel.

RICHARD BARSTOW ALBIN
STATE OF WASHINGTON
34042
REGISTERED
PROFESSIONAL ENGINEER

EXPIRES JULY 24, 2008

NOTE: THIS PLAN IS NOT A LEGAL ENGINEERING DOCUMENT BUT AN ELECTRONIC DUPLICATE. THE ORIGINAL, SIGNED BY THE ENGINEER AND APPROVED FOR PUBLICATION, IS KEPT ON FILE AT THE WASHINGTON STATE DEPARTMENT OF TRANSPORTATION. A COPY MAY BE OBTAINED UPON REQUEST.

BEAM GUARDRAIL TYPE 31 TRANSITION TO BEAM GUARDRAIL TYPE 1 STANDARD PLAN C-25.22-00

SHEET 1 OF 1 SHEET

APPROVED FOR PUBLICATION

Ken L. Smith — STATE DESIGN ENGINEER
02-21-07 — DATE

Washington State Department of Transportation

EFFECTIVE: APRIL 2, 2007 TO JANUARY 6, 2008
EFFECTIVE: APRIL 2, 2007 TO JANUARY 6, 2008
EFFECTIVE: APRIL 2, 2007 TO JANUARY 6, 2008
EFFECTIVE: APRIL 2, 2007 TO JANUARY 6, 2008

EFFECTIVE: APRIL 2, 2007 TO JANUARY 6, 2008

EFFECTIVE: APRIL 2, 2007 TO JANUARY 6, 2008

DRAWN BY: BILL BERENS

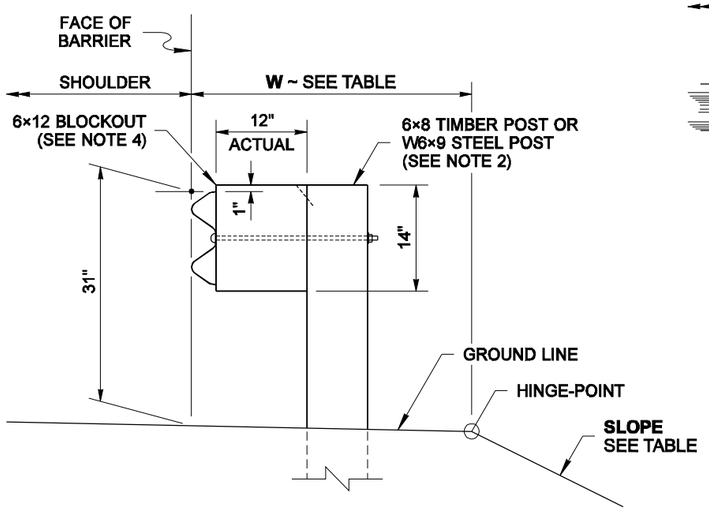

TYPICAL SECTION ~ WITHOUT CURB
(6' - 0" LONG POSTS)

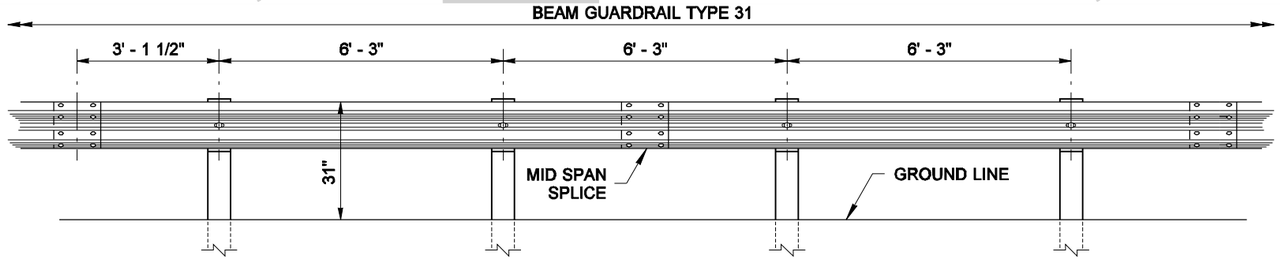

TYPICAL ELEVATION

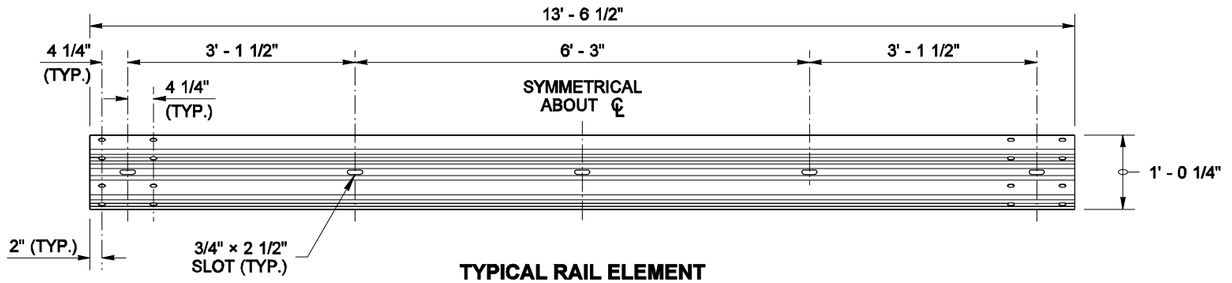

TYPICAL RAIL ELEMENT

NOTES

1. Refer to **Standard Plan C-1** and **C-1b**, for additional details not shown on this plan.
2. All posts for any standard barrier run shall be of the same type: Timber or Steel.
3. See Contract for type of curb required. See Standard Plans for dimensions.
4. Use a single or combination of blocks to achieve the actual 12" offset. See **Standard Specification 9-16.3 (2)**. Wood blocks shall be toe-nailed to post (and blocks, if block combinations are utilized) with a 16d galvanized nail to prevent block rotation.
5. On steel posts, attach blockouts using bolt holes on approaching traffic side of post web.

SLOPE \ EMBANKMENT TABLE	
SLOPE	**W**
2H:1V OR FLATTER	2.5' MIN.
STEEPER THAN 2H:1V BUT NOT STEEPER THAN 1H:1V	4.0' MIN.

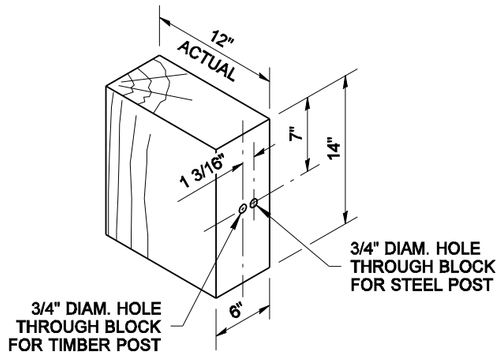

WOOD BLOCK

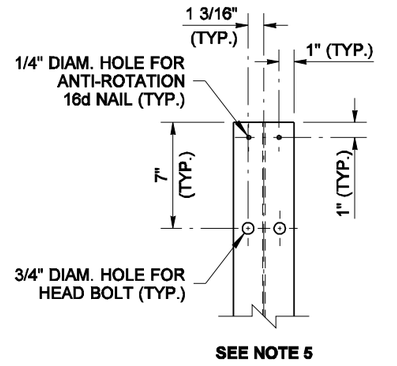

SEE NOTE 5

STEEL POST

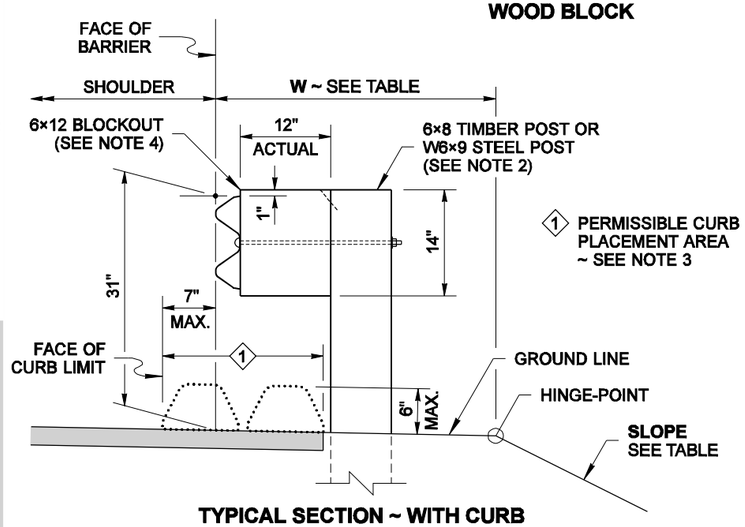

TYPICAL SECTION ~ WITH CURB
(6' - 0" LONG POSTS)

ISOMETRIC VIEW

RICHARD BARSTOW ALBIN
STATE OF WASHINGTON
34042
REGISTERED
PROFESSIONAL ENGINEER

EXPIRES JULY 24, 2008

NOTE: THIS PLAN IS NOT A LEGAL ENGINEERING DOCUMENT BUT AN ELECTRONIC DUPLICATE. THE ORIGINAL, SIGNED BY THE ENGINEER, AND APPROVED FOR PUBLICATION, IS KEPT ON FILE AT THE WASHINGTON STATE DEPARTMENT OF TRANSPORTATION. A COPY MAY BE OBTAINED UPON REQUEST.

BEAM GUARDRAIL TYPE 31

STANDARD PLAN C-28.40-00

SHEET 1 OF 1 SHEET

APPROVED FOR PUBLICATION

Ken L. Smith — STATE DESIGN ENGINEER — *02-06-07* — DATE

Washington State Department of Transportation

EFFECTIVE: APRIL 2, 2007 TO JANUARY 6, 2008

EFFECTIVE: APRIL 2, 2007 TO JANUARY 6, 2008

EFFECTIVE: APRIL 2, 2007 TO JANUARY 6, 2008

DIMENSIONS (ft)				FOOTING REINFORCEMENT									STEM REINFORCEMENT		BAR G (size #4)	MATERIAL QUANTITY		
				BAR E		BAR F			BAR K									
H (ft)	B	C_V	D		h	SIZE	SPAC.	LENGTH	SIZE	SPAC.	LENGTH	h	b			LENGTH	CONCRETE CY/LF	STEEL LBS/LF	H (ft)
5	5'-6"	2'-0"	1'-0"	3'-4"	2'-9"	#4	9"	3'-6"	#5	9"	7'-2"	4'-7"	3'-0"			3'-10"	0.36	26.3	5
6	5'-6"	2'-0"	1'-0"	3'-4"	2'-9"	#4	9"	3'-5"	#5	9"	8'-3"	5'-7"	3'-1"			4'-10"	0.41	29.5	6
7	5'-9"	2'-3"	1'-0"	3'-4"	2'-9"	#4	9"	3'-4"	#5	9"	9'-7"	6'-7"	3'-5"			5'-10"	0.47	31.8	7
8	5'-9"	2'-3"	1'-0"	3'-4"	2'-9"	#4	9"	3'-3"	#5	9"	10'-8"	7'-7"	3'-6"			6'-10"	0.53	35.0	8
9	6'-0"	2'-3"	1'-0"	3'-4"	2'-9"	#4	9"	3'-1"	#5	9"	12'-0"	8'-7"	3'-8"			7'-10"	0.60	38.5	9
10	6'-3"	2'-3"	1'-0"	3'-4"	2'-9"	#4	9"	3'-6"	#5	9"	12'-11"	9'-7"	3'-9"			8'-10"	0.67	40.6	10
11	6'-6"	2'-3"	1'-0"	3'-4"	2'-9"	#4	9"	3'-8"	#5	9"	14'-0"	10'-7"	3'-10"			9'-10"	0.75	44.7	11
12	7'-0"	2'-6"	1'-0"	3'-4"	2'-9"	#4	9"	3'-10"	#5	8"	14'-4"	11'-7"	4'-2"			10'-10"	0.84	49.6	12
13	7'-6"	2'-6"	1'-0"	3'-4"	2'-9"	#5	10"	4'-7"	#5	7"	15'-5"	12'-7"	4'-3"			11'-10"	0.93	57.5	13
14	7'-9"	2'-6"	1'-0"	3'-4"	2'-9"	#5	9"	4'-8"	#5	7"	17'-7"	13'-7"	4'-4"			12'-10"	1.02	63.9	14
15	8'-3"	2'-6"	1'-0"	3'-4"	2'-9"	#5	7"	4'-10"	#5	6"	17'-9"	14'-7"	4'-6"			13'-10"	1.12	73.4	15
16	8'-9"	2'-9"	1'-3"	3'-8"	3'-0"	#6	10"	5'-6"	#5	6"	20'-1"	15'-7"	4'-10"			14'-7"	1.29	80.0	16
17	9'-3"	3'-0"	1'-6"	3'-8"	3'-0"	#6	10"	5'-8"	#5	6"	21'-5"	16'-7"	5'-2"			15'-7"	1.46	84.8	17
18	9'-9"	3'-3"	1'-6"	3'-11"	3'-3"	#6	9"	5'-10"	#6	7"	22'-7"	17'-7"	5'-5"			16'-4"	1.58	100.9	18
19	10'-0"	3'-6"	1'-9"	3'-11"	3'-3"	#6	9"	6'-3"	#6	6"	24'-0"	18'-7"	5'-10"			17'-4"	1.77	118.1	19
20	10'-9"	3'-6"	1'-9"	4'-2"	3'-6"	#6	8"	6'-5"	#6	6"	25'-2"	19'-7"	6'-0"			18'-1"	1.91	124.0	20
21	11'-3"	3'-9"	2'-0"	4'-5"	3'-9"	#6	8"	6'-10"	#7	1'-2"	17'-8"	11'-11"	6'-4"	#7	1'-2"	10'-7"	4'-10"	6'-4"	#7	1'-2"	18'-11"	18'-10"	2.12	133.8	21
22	11'-9"	4'-0"	2'-0"	4'-5"	3'-9"	#6	7"	7'-0"	#7	1'-1"	18'-5"	12'-4"	6'-8"	#7	1'-1"	10'-11"	4'-10"	6'-8"	#7	1'-1"	19'-11"	19'-10"	2.26	148.5	22
23	12'-3"	4'-3"	2'-3"	4'-8"	4'-0"	#6	7"	7'-2"	#7	1'-0"	19'-2"	12'-10"	7'-0"	#7	1'-0"	11'-6"	5'-1"	7'-0"	#7	1'-0"	20'-8"	20'-7"	2.49	161.3	23
24	12'-9"	4'-3"	2'-3"	4'-8"	4'-0"	#6	6"	7'-7"	#8	1'-2"	20'-7"	14'-2"	7'-1"	#8	1'-2"	12'-6"	6'-1"	7'-1"	#8	1'-0"	21'-8"	21'-7"	2.64	188.5	24
25	13'-3"	4'-6"	2'-6"	4'-11"	4'-3"	#6	6"	7'-9"	#8	1'-1"	21'-7"	14'-9"	7'-6"	#8	1'-1"	13'-2"	6'-4"	7'-6"	#8	1'-1"	22'-5"	22'-4"	2.89	205.0	25
26	13'-9"	4'-9"	2'-6"	4'-11"	4'-3"	#6	6"	7'-11"	#8	1'-0"	22'-2"	15'-1"	7'-11"	#8	1'-0"	13'-6"	6'-4"	7'-10"	#8	1'-0"	23'-5"	23'-4"	3.06	224.8	26
27	14'-3"	5'-0"	2'-9"	5'-2"	4'-6"	#6	6"	8'-1"	#9	1'-2"	24'-2"	16'-9"	8'-2"	#9	1'-2"	15'-0"	7'-8"	8'-2"	#9	1'-2"	24'-2"	24'-1"	3.33	253.9	27
28	14'-9"	5'-3"	3'-0"	5'-5"	4'-9"	#6	6"	8'-3"	#9	1'-1"	25'-0"	17'-3"	8'-6"	#9	1'-1"	15'-7"	7'-11"	8'-6"	#9	1'-1"	24'-11"	24'-10"	3.61	275.9	28
29	15'-3"	5'-6"	3'-3"	5'-8"	5'-0"	#6	6"	8'-5"	#9	1'-0"	25'-3"	17'-9"	8'-11"	#9	1'-0"	15'-7"	8'-2"	8'-11"	#9	1'-0"	25'-9"	25'-7"	3.90	299.0	29
30	16'-0"	5'-9"	3'-3"	5'-8"	5'-0"	#7	7"	9'-8"	#9	11"	26'-8"	18'-2"	9'-3"	#9	11"	16'-7"	8'-2"	9'-3"	#9	11"	26'-6"	26'-7"	4.12	340.3	30
31	16'-6"	6'-0"	3'-6"	5'-11"	5'-3"	#7	7"	9'-10"	#9	11"	27'-6"	18'-8"	9'-7"	#9	11"	17'-2"	8'-5"	9'-7"	#9	11"	27'-6"	27'-4"	4.43	352.3	31
32	17'-0"	6'-3"	3'-9"	6'-2"	5'-6"	#7	7"	10'-0"	#9	10"	28'-5"	19'-3"	9'-11"	#9	10"	17'-9"	8'-8"	9'-11"	#9	10"	28'-3"	28'-1"	4.76	390.0	32
33	17'-6"	6'-6"	4'-0"	6'-4"	5'-9"	#7	6"	10'-2"	#9	10"	29'-2"	19'-9"	10'-2"	#9	10"	18'-3"	8'-11"	10'-2"	#9	10"	29'-0"	28'-10"	5.09	406.4	33
34	18'-0"	6'-9"	4'-3"	6'-8"	6'-0"	#7	6"	10'-4"	#9	10"	30'-2"	20'-3"	10'-8"	#9	10"	19'-0"	9'-2"	10'-8"	#9	10"	29'-9"	29'-7"	5.44	417.8	34
35	18'-6"	7'-0"	4'-6"	6'-11"	6'-3"	#7	6"	10'-6"	#10	11"	32'-4"	22'-2"	11'-0"	#10	11"	20'-10"	10'-9"	11'-0"	#10	11"	30'-6"	30'-3"	5.79	491.0	35

* If traffic barrier is used, add 0.100 CY of Concrete Class 4000 for Barrier Alternate 1. Add 0.123 CY of Concrete Class 4000 for Barrier Alternate 2 - L.F.

** Add 28 LBS of reinforcing steel for Barrier Alternate 1 or 19 LBS of reinforcing steel for Barrier Alternate 2 - per LF.

BAR M					BAR J		
SIZE	SPAC.	LENGTH	h	b	SIZE	SPAC.	LENGTH
#7	1'-2"	10'-7"	4'-10"	6'-4"	#7	1'-2"	18'-11"
#7	1'-1"	10'-11"	4'-10"	6'-8"	#7	1'-1"	19'-11"
#7	1'-0"	11'-6"	5'-1"	7'-0"	#7	1'-0"	20'-8"
#8	1'-2"	12'-6"	6'-1"	7'-1"	#8	1'-0"	21'-8"
#8	1'-1"	13'-2"	6'-4"	7'-6"	#8	1'-1"	22'-5"
#8	1'-0"	13'-6"	6'-4"	7'-10"	#8	1'-0"	23'-5"
#9	1'-2"	15'-0"	7'-8"	8'-2"	#9	1'-2"	24'-2"
#9	1'-1"	15'-7"	7'-11"	8'-6"	#9	1'-1"	24'-11"
#9	1'-0"	15'-7"	8'-2"	8'-11"	#9	1'-0"	25'-9"
#9	11"	16'-7"	8'-2"	9'-3"	#9	11"	26'-6"
#9	11"	17'-2"	8'-5"	9'-7"	#9	11"	27'-6"
#9	10"	17'-9"	8'-8"	9'-11"	#9	10"	28'-3"
#9	10"	18'-3"	8'-11"	10'-2"	#9	10"	29'-0"
#9	10"	19'-0"	9'-2"	10'-8"	#9	10"	29'-9"
#10	11"	20'-10"	10'-9"	11'-0"	#10	11"	30'-6"

NOTES

1. All concrete including traffic barrier shall be Class 4000 except as noted.
2. For backfill requirements, see Standard Plan "D-4".
3. When Wall Type 1-SW (saltwater) is specified, the concrete cover over steel in the front face and the total wall thickness shall be increased by 1".
4. When Wall Type 1-SW (saltwater) is specified, concrete in the table column "Material Quantity" shall be increased by 0.003 x H CY/LF.
5. If Bar W1 interferes with the retaining wall form, it shall be field bent only at the angle point. The bar shall not be twisted.
6. Toe height for traffic barrier may vary, 2" MIN to 6" MAX.
7. Height of traffic barrier may vary if required to provide a profile pleasing to the eye.
8. Concrete in the 24 foot wall sections shall be placed separately between expansion joints with a minimum 12 hour period between concrete placement.

Bar	MIN Splice
#4	2'-0"
#5	2'-0"
#6	2'-1"
#7	2'-11"
#8	3'-9"
#9	4'-9"
#10	6'-1"

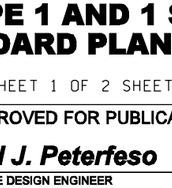

BAR E
At 1'-6" centers

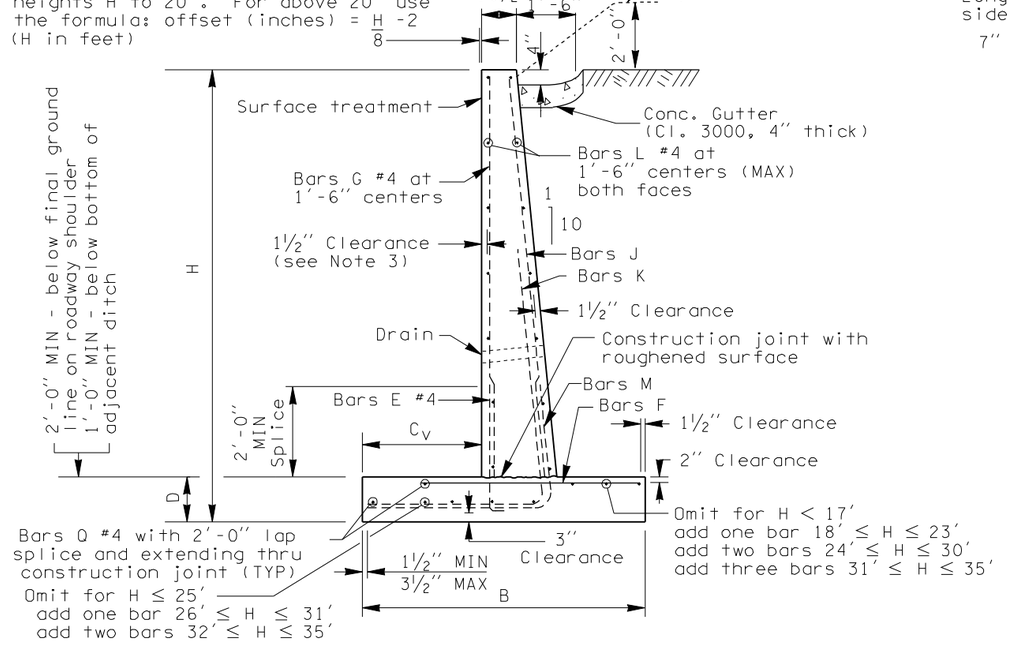

SECTION - VERTICAL FACE

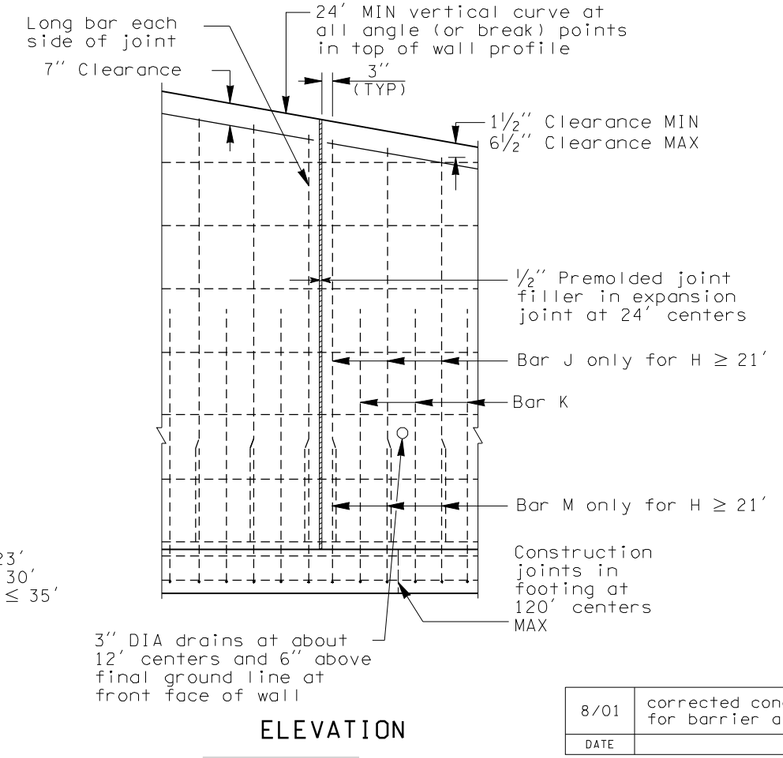

ELEVATION

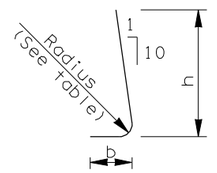

Bar	Radius
#5	9"
#6	11"
#7	1'-1"
#8	1'-3"
#9	1'-6"
#10	1'-8"

BARS K AND M

WALL DESIGN WITH VERTICAL FRONT FACE AND 2' SURCHARGE OR TRAFFIC BARRIER

JEROME A. WEIGEL
STATE OF WASHINGTON
14742
REGISTERED
PROFESSIONAL ENGINEER

EXPIRES JUNE 29, 2002

NOTE: THIS PLAN IS NOT A LEGAL ENGINEERING DOCUMENT BUT AN ELECTRONIC DUPLICATE. THE ORIGINAL, SIGNED BY THE ENGINEER AND APPROVED FOR PUBLICATION, IS KEPT ON FILE AT THE WASHINGTON STATE DEPARTMENT OF TRANSPORTATION. A COPY MAY BE OBTAINED UPON REQUEST.

REINFORCED CONCRETE RETAINING WALL TYPE 1 AND 1 SW STANDARD PLAN D-1a

SHEET 1 OF 2 SHEETS

APPROVED FOR PUBLICATION

Harold J. Peterfeso 01-23-02

STATE DESIGN ENGINEER — DATE

Washington State Department of Transportation

DATE	REVISION	BY
8/01	corrected concrete quantity for barrier alternate 2	MAS

EFFECTIVE: APRIL 2, 2007 TO JANUARY 6, 2008

EFFECTIVE: APRIL 2, 2007 TO JANUARY 6, 2008

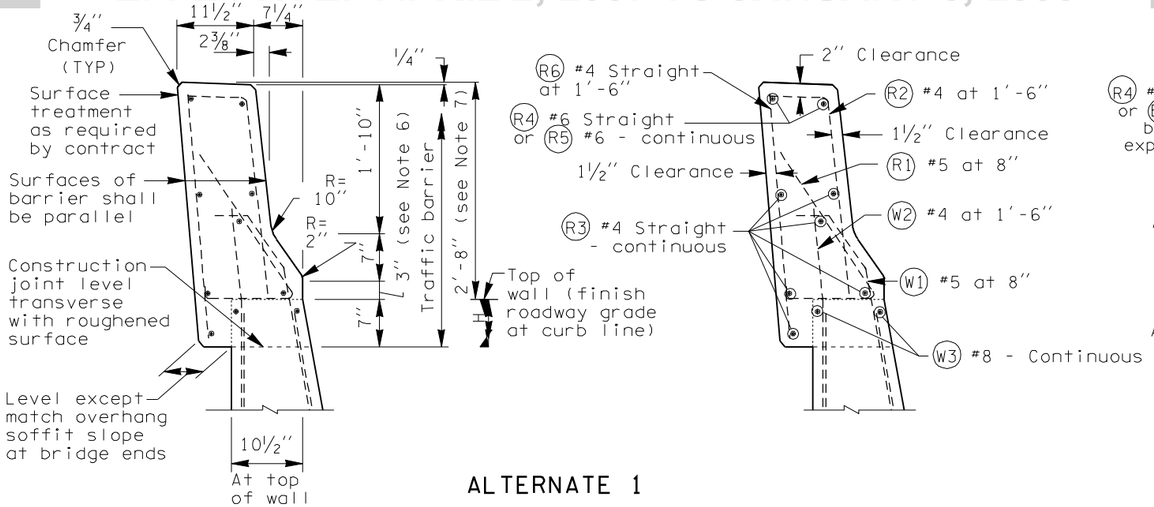

ALTERNATE 1

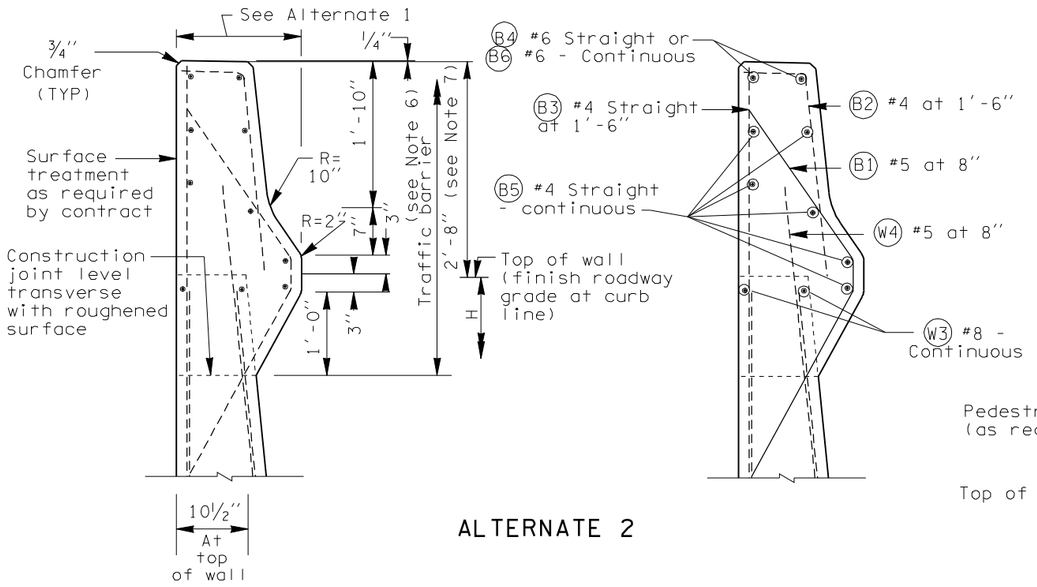

ALTERNATE 2

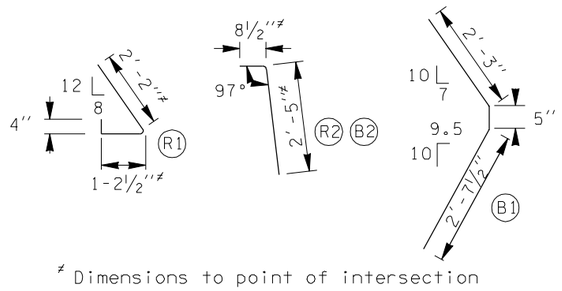

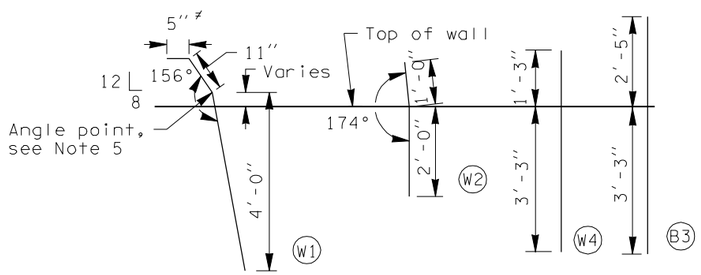

EFFECTIVE: APRIL 2, 2007 TO JANUARY 6, 2008

EFFECTIVE: APRIL 2, 2007 TO JANUARY 6, 2008

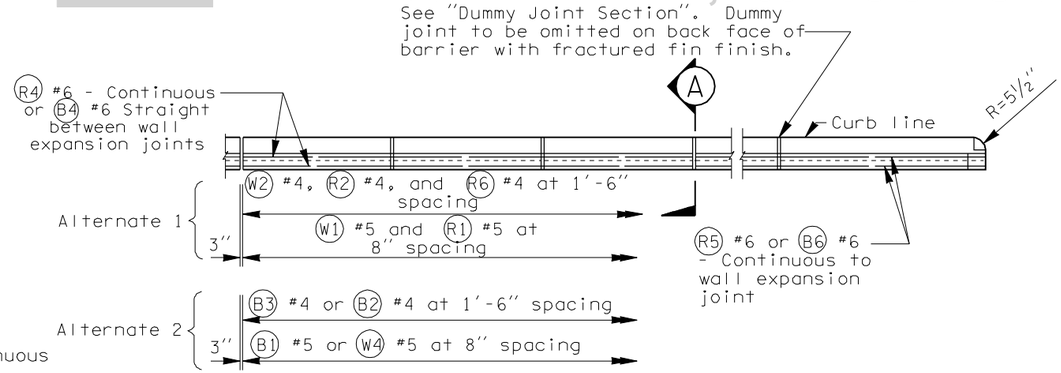

PLAN - TRAFFIC BARRIER

All chamfers 3/4"

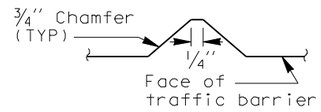

DUMMY JOINT SECTION

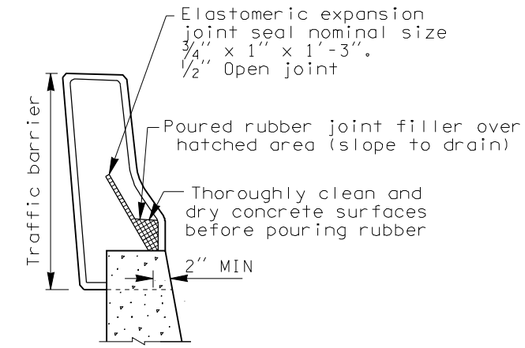

A SECTION

WALL DESIGN WITH VERTICAL FRONT FACE AND 2' SURCHARGE OR TRAFFIC BARRIER

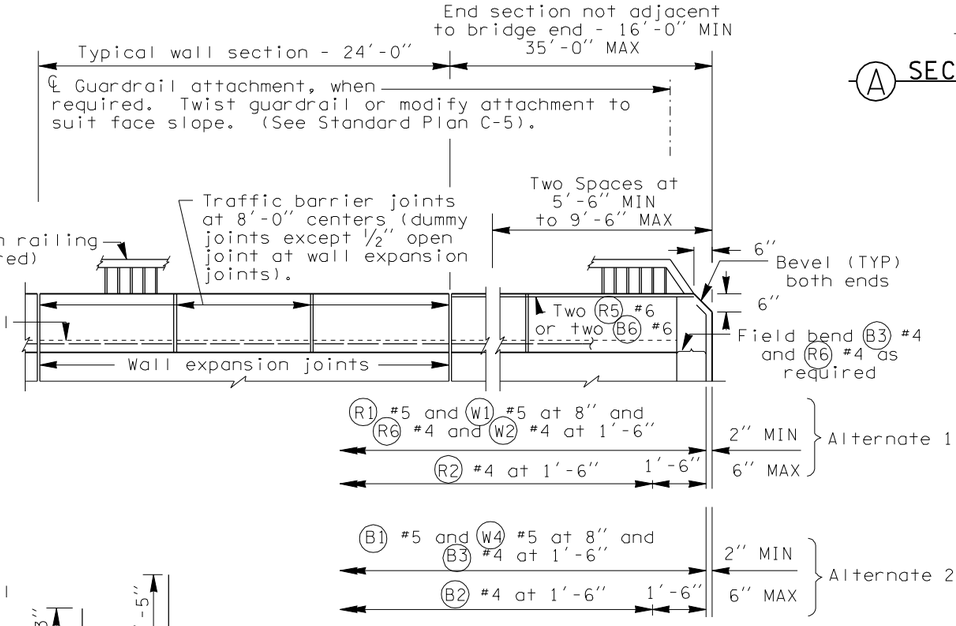

WALL ELEVATION

JEROME A. WEIGEL
STATE OF WASHINGTON
14742
REGISTERED
PROFESSIONAL ENGINEER

EXPIRES JUNE 29, 2002

NOTE: THIS PLAN IS NOT A LEGAL ENGINEERING DOCUMENT BUT AN ELECTRONIC DUPLICATE. THE ORIGINAL, SIGNED BY THE ENGINEER AND APPROVED FOR PUBLICATION, IS KEPT ON FILE AT THE WASHINGTON STATE DEPARTMENT OF TRANSPORTATION. A COPY MAY BE OBTAINED UPON REQUEST.

REINFORCED CONCRETE RETAINING WALL TYPE 1 AND 1 SW STANDARD PLAN D-1a

SHEET 2 OF 2 SHEETS

APPROVED FOR PUBLICATION

Harold J. Peterfeso 01-23-02

STATE DESIGN ENGINEER — DATE

Washington State Department of Transportation

DATE	REVISION	BY
8/01	New Approval Date	MAS

EFFECTIVE: APRIL 2, 2007 TO JANUARY 6, 2008

EFFECTIVE: APRIL 2, 2007 TO JANUARY 6, 2008

EFFECTIVE: APRIL 2, 2007 TO JANUARY 6, 2008

DIMENSIONS				E BAR (size #4)		FOOTING REINFORCEMENT								STEM REINFORCEMENT				G BAR (size #4)	MATERIAL QUANTITY		
						F BAR			K BAR					M BAR				J BAR				
H (ft)	B	C_V	D	LENGTH	h	SIZE	SPACING	LENGTH	SIZE	SPACING	LENGTH	h	b	SIZE	SPACING	LENGTH	h	b	SIZE	SPACING	LENGTH	LENGTH	CONCRETE (CY/LF)	STEEL (LBS/LF)	H (ft)
5	5'-6"	3'-0"	1'-0"	3'- 5"	2'- 9"	4	9"	3'-9"	5	9"	6'-10"	4'-7"	2'-7"									3'-10"	0.363	26.207	5
6	5'-6"	3'-0"	1'-0"	3'- 5"	2'- 9"	4	9"	3'-9"	5	9"	7'-10"	5'-7"	2'-7"									4'-10"	0.412	29.379	6
7	5'-9"	3'-3"	1'-0"	3'- 5"	2'- 9"	4	9"	3'-9"	5	9"	9'-1"	6'-7"	2'-10"									5'-10"	0.474	31.447	7
8	5'-9"	3'-3"	1'-0"	3'- 5"	2'- 9"	4	9"	3'-9"	5	9"	10'-1"	7'-7"	2'-10"									6'-10"	0.531	34.619	8
9	6'-0"	3'-6"	1'-0"	3'- 5"	2'- 9"	4	9"	3'-9"	5	9"	11'-4"	8'-7"	3'-1"									7'-11"	0.600	38.176	9
10	6'-3"	3'-6"	1'-0"	3'- 5"	2'- 9"	4	9"	4'-0"	5	9"	12'-4"	9'-7"	3'-1"									8'-11"	0.673	40.235	10
11	6'-6"	3'-6"	1'-0"	3'- 5"	2'- 9"	5	9"	4'-7"	5	9"	13'-4"	10'-7"	3'-1"									9'-11"	0.750	46.218	11
12	7'-0"	3'-9"	1'-0"	3'- 5"	2'- 9"	5	9"	4'-10"	5	9"	14'-7"	11'-7"	3'-4"									10'-11"	0.840	50.753	12
13	7'-6"	3'-9"	1'-0"	3'- 5"	2'- 9"	5	9"	5'-1"	5	9"	15'-10"	12'-7"	3'-4"									11'-11"	0.933	53.400	13
14	7'-9"	3'-9"	1'-0"	3'- 5"	2'- 9"	6	8"	6'-1"	5	8"	16'-7"	13'-7"	3'-4"									12'-11"	1.021	62.745	14
15	8'-0"	3'-9"	1'-0"	3'- 5"	2'- 9"	6	7"	6'-4"	5	7"	17'-7"	14'-7"	3'-4"									13'-11"	1.113	68.519	15
16	8'-6"	4'-0"	1'-3"	3'- 8"	3'- 0"	6	7"	6'-7"	6	8"	18'-9"	15'-7"	3'-7"									14'-8"	1.274	87.587	16
17	9'-0"	4'-3"	1'-3"	3'- 8"	3'- 0"	6	6"	6'-10"	6	8"	20'-0"	16'-7"	3'-10"									15'-8"	1.387	96.241	17
18	9'-6"	4'-6"	1'-6"	3'-10"	3'- 3"	6	6"	7'-1"	6	7"	21'-3"	17'-7"	4'-1"									16'-5"	1.567	107.056	18
19	10'-3"	5'-0"	1'-6"	3'-10"	3'- 3"	6	6"	7'-4"	6	6"	22'-9"	18'-7"	4'-7"									17'-5"	1.704	123.464	19
20	10'-6"	5'-0"	1'-9"	4'- 2"	3'- 6"	6	6"	7'-7"	6	6"	23'-9"	19'-7"	4'-7"									18'-2"	1.889	127.451	20
21	11'-3"	5'-6"	2'-0"	4'- 5"	3'- 9"	6	6"	7'-10"	7	1'-2"	13'-5"	8'-10"	5'-1"	7	1'-2"	9'-4"	4'-9"	5'-1"	7	1'-2"	18'-10"	18'-11"	2.118	131.930	21
22	11'-9"	5'-9"	2'-0"	4'- 5"	3'- 9"	7	7"	8'-11"	7	1'-0"	14'-1"	9'-3"	5'-4"	7	1'-0"	9'-7"	4'-9"	5'-4"	7	1'-0"	19'-10"	19'-11"	2.259	157.217	22
23	12'-3"	6'-0"	2'-3"	4'- 8"	4'- 0"	7	7"	9'-2"	7	1'-0"	14'-10"	9'-9"	5'-7"	7	1'-0"	10'-1"	5'-0"	5'-7"	7	1'-0"	20'-7"	20'-8"	2.491	163.792	23
24	12'-9"	6'-3"	2'-3"	4'- 8"	4'- 0"	7	6"	9'-5"	8	1'-2"	15'-5"	10'-2"	5'-10"	8	1'-2"	11'-3"	6'-0"	5'-10"	8	1'-2"	21'-7"	21'-8"	2.643	189.370	24
25	13'-3"	6'-6"	2'-6"	4'-11"	4'- 0"	7	6"	9'-8"	8	1'-1"	16'-2"	10'-8"	6'-1"	8	1'-1"	11'-9"	6'-3"	6'-1"	8	1'-1"	22'-4"	22'-5"	2.894	206.931	25
26	13'-9"	6'-9"	2'-6"	4'-11"	4'- 3"	7	6"	9'-11"	8	1'-0"	16'-10"	11'-1"	6'-4"	8	1'-0"	12'-0"	6'-3"	6'-4"	8	1'-0"	23'-4"	23'-5"	3.057	222.725	26
27	14'-3"	7'-0"	2'-9"	5'- 2"	4'- 6"	8	7"	11'-2"	9	1'-2"	17'-5"	11'-6"	6'-7"	9	1'-2"	13'-6"	7'-7"	6'-7"	9	1'-2"	24'-1"	24'-2"	3.326	254.763	27
28	14'-9"	7'-3"	3'-0"	5'- 5"	4'- 9"	8	7"	11'-5"	9	1'-1"	18'-9"	12'-0"	6'-10"	9	1'-1"	14'-0"	7'-10"	7'-10"	9	1'-1"	24'-10"	25'-0"	3.607	276.351	28
29	15'-3"	7'-6"	3'-3"	5'- 8"	5'- 0"	8	7"	11'-8"	9	1'-0"	19'-0"	12'-5"	7'-1"	9	1'-0"	14'-6"	8'-1"	7'-1"	9	1'-0"	25'-7"	25'-9"	3.898	300.338	29
30	16'-0"	8'-0"	3'-3"	5'- 8"	5'- 0"	8	6"	11'-11"	9	11"	19'-11"	13'-0"	7'-7"	9	11"	15'-0"	8'-1"	7'-7"	9	11"	26'-7"	26'-9"	4.118	340.248	30
31	16'-6"	8'-3"	3'-6"	5'-11"	5'- 3"	8	6"	12'-2"	9	11"	20'-2"	13'-6"	7'-10"	9	11"	15'-6"	8'-4"	7'-10"	9	11"	27'-4"	27'-6"	4.431	350.783	31
32	17'-0"	8'-6"	3'-9"	6'- 2"	5'- 6"	8	6"	12'-5"	9	10"	20'-11"	14'-0"	8'-1"	9	10"	16'-0"	8'-7"	8"-1"	9	10"	28'-1"	28'-3"	4.755	384.956	32
33	17'-6"	8'-9"	4'-0"	6'- 5"	5'- 9"	8	6"	12'-8"	9	10"	21'-8"	14'-7"	8'-4"	9	10"	16'-6"	8'-10"	8'-4"	9	10"	28'-11"	29'-0"	5.090	395.892	33
34	18'-0"	9'-0"	4'-3"	6'- 8"	6'- 0"	8	6"	12'-11"	9	10"	22'-6"	15'-1"	8'-7"	9	10"	17'-0"	9'-1"	8'-7"	9	10"	29'-7"	29'-9"	5.437	406.513	34
35	18'-6"	9'-3"	4'-6"	6'-11"	6'- 3"	8	6"	13'-2"	10	11"	23'-1"	15'-7"	8'-10"	10	11"	18'-9"	10'-8"	8'-10"	10	11"	30'-4"	30'-6"	5.794	467.610	35

* If traffic barrier is used, add 0.110 CY of concrete Class 4000 for Barrier Alternate 1. Add 0.152 CY of concrete Class 4000 for Barrier Alternate 2 - per LF.

** Add 16 LB/FT of reinforcing steel for Barrier Alternate 1 or 23 LB/FT of reinforcing steel for Barrier Alternate 2 - per LF.

NOTES

1. All concrete including traffic barrier shall be Class 4000 except as noted.
2. For backfill requirements, see Standard Plan "D-4".
3. When Type 2-SW (saltwater) is specified, the concrete cover over steel in the front face and the total wall thickness shall be increased by 1".
4. If concrete is "SW", the Material Quantity in the table shall be increased by 0.003 x H CY/LF.
5. If Bar W1 interferes with the retaining wall form, it shall be field bent only at the angle point. Twisting of the bar will not be permitted.
6. Toe height may vary 2" MIN to 6" MAX.
7. Height may vary if required to provide a profile pleasing to the eye.
8. Concrete in the 24 foot wall sections shall be placed separately between expansion joints with a minimum 12 hour period between concrete placement.

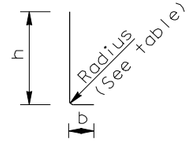

BARS K AND M

Bar	Radius R
#5	9"
#6	11"
#7	1'-1"
#8	1'-3"
#9	1'-6"
#10	1'-8"

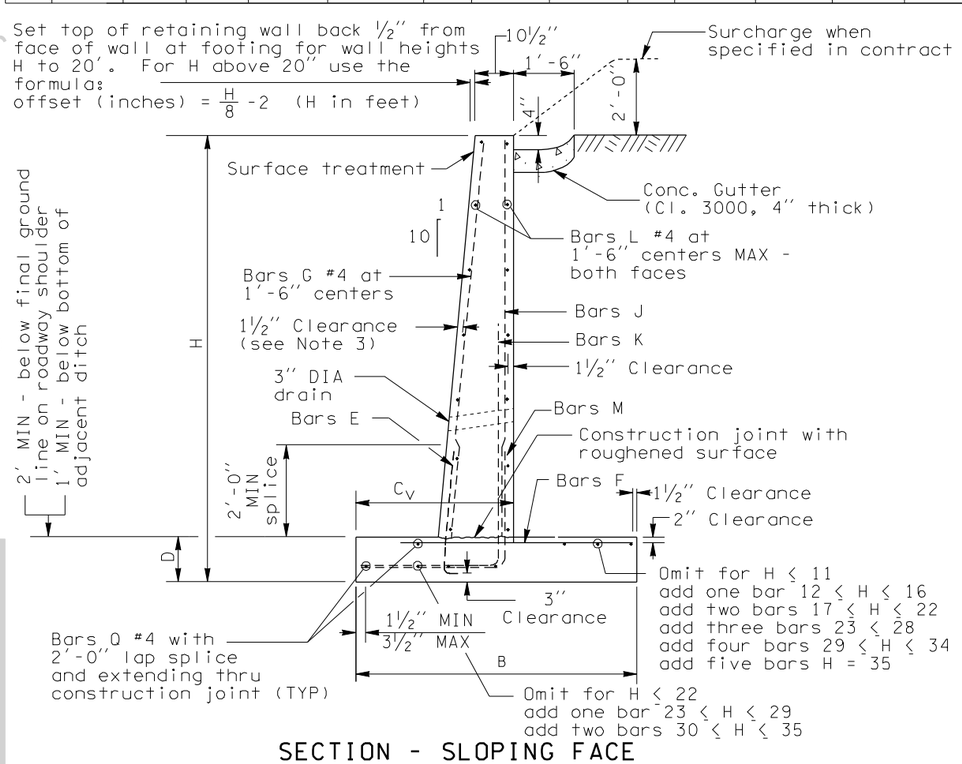

SECTION - SLOPING FACE

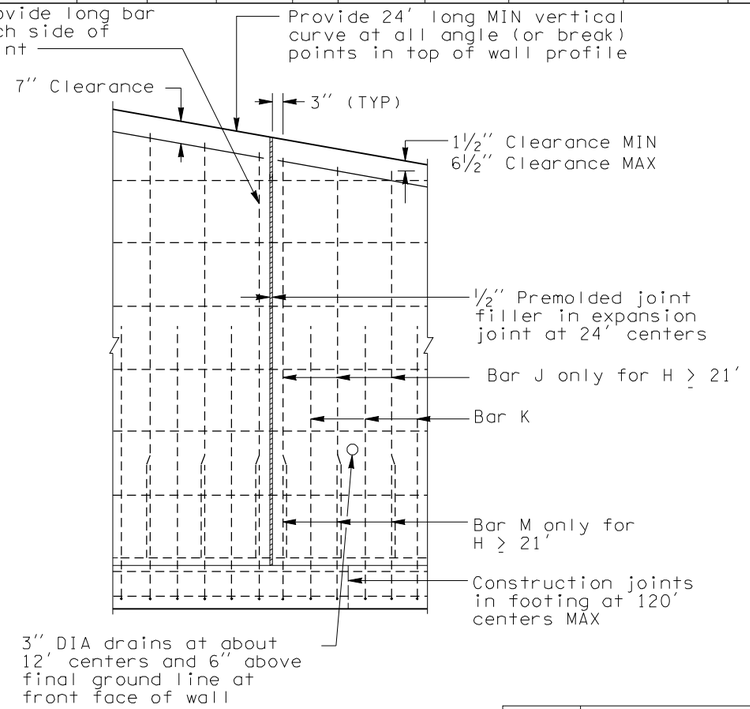

ELEVATION

Bar	MIN Splice
#4	2'-0"
#5	2'-0"
#6	2'-1"
#7	2'-11"
#8	3'-9"
#9	4'-9"
#10	6'-1"

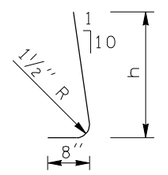

BAR E
@ 1'-6" centers

WALL DESIGN WITH SLOPING FRONT FACE AND 2' SURCHARGE OR TRAFFIC BARRIER

JEROME A. WEIGEL
STATE OF WASHINGTON
14742
REGISTERED
PROFESSIONAL ENGINEER

EXPIRES JUNE 29, 2000

NOTE: THIS PLAN IS NOT A LEGAL ENGINEERING DOCUMENT BUT AN ELECTRONIC DUPLICATE. THE ORIGINAL, SIGNED BY THE ENGINEER AND APPROVED FOR PUBLICATION, IS KEPT ON FILE AT THE WASHINGTON STATE DEPARTMENT OF TRANSPORTATION. A COPY MAY BE OBTAINED UPON REQUEST.

REINFORCED CONCRETE RETAINING WALL TYPE 2 AND 2 SW STANDARD PLAN D-1b

SHEET 1 OF 2 SHEETS

APPROVED FOR PUBLICATION

Clifford E. Mansfield 10/06/99

DEPUTY STATE DESIGN ENGINEER — DATE

WASHINGTON STATE DEPARTMENT OF TRANSPORTATION
OLYMPIA, WASHINGTON

DATE	REVISION	BY
10/99	Added note 8.	TWS

EFFECTIVE: APRIL 2, 2007 TO JANUARY 6, 2008

EFFECTIVE: APRIL 2, 2007 TO JANUARY 6, 2008

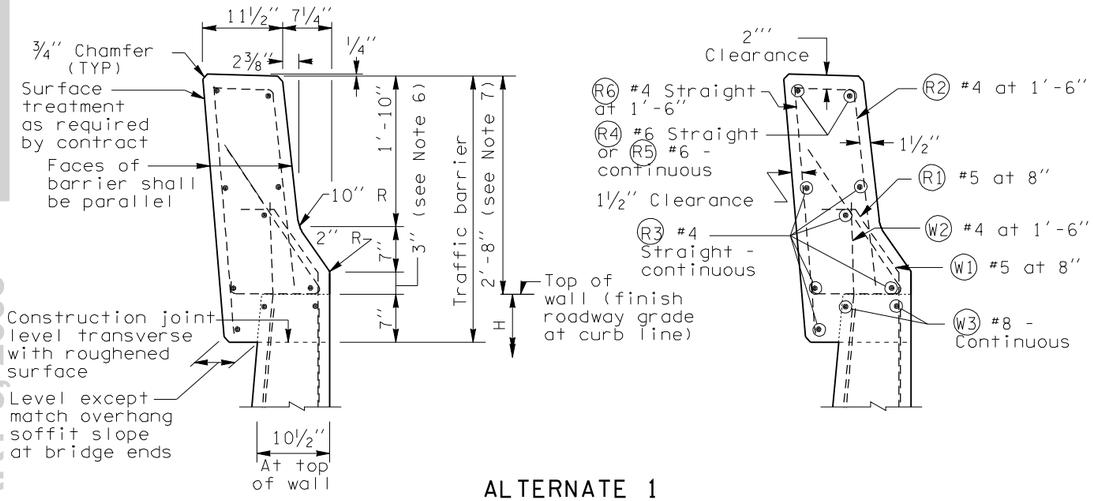

ALTERNATE 1

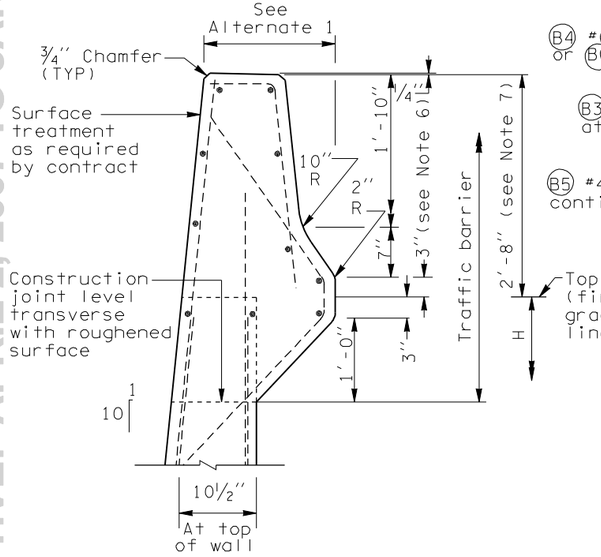

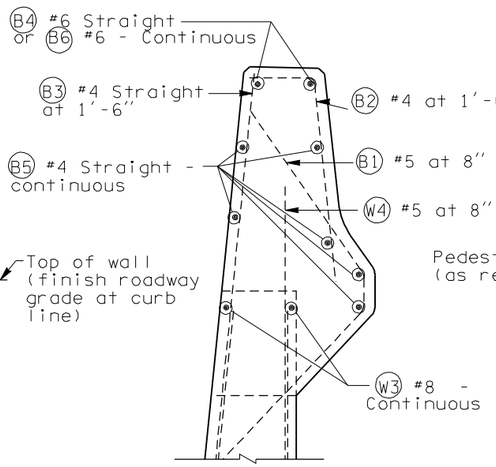

ALTERNATE 2

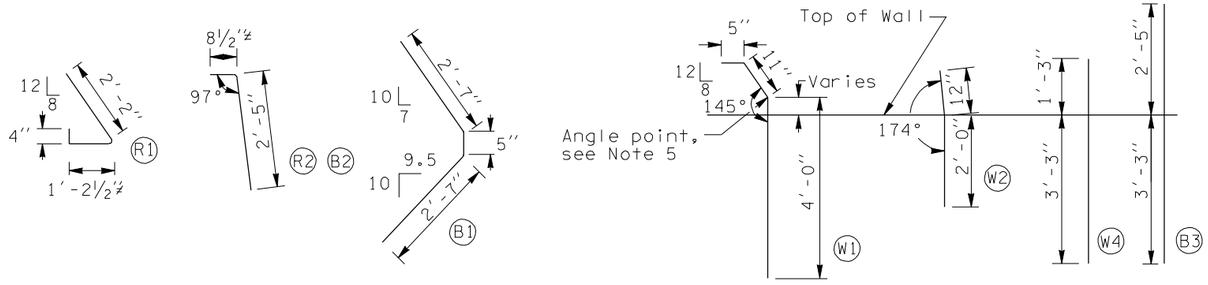

≠ Dimensions to points of intersection

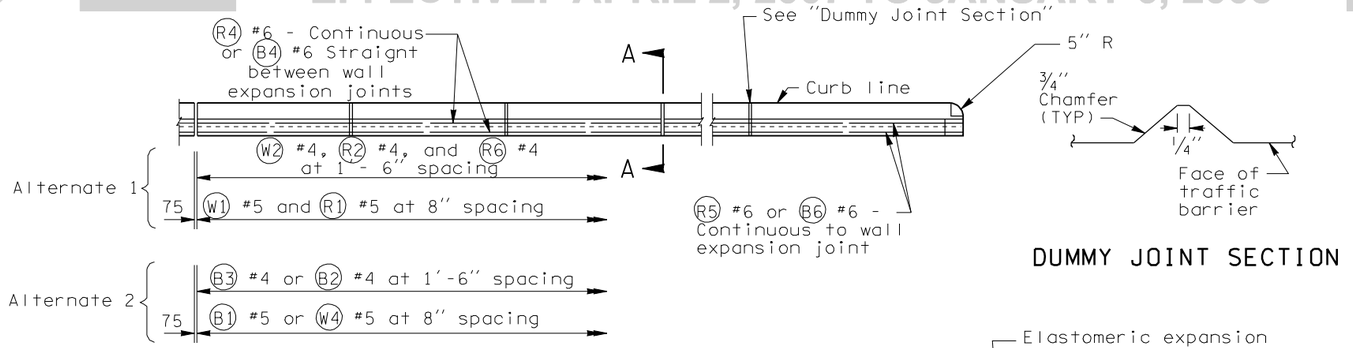

PLAN - TRAFFIC BARRIER

All chamfers ¾''

DUMMY JOINT SECTION

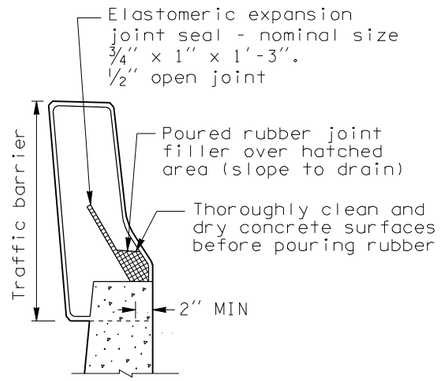

SECTION A-A

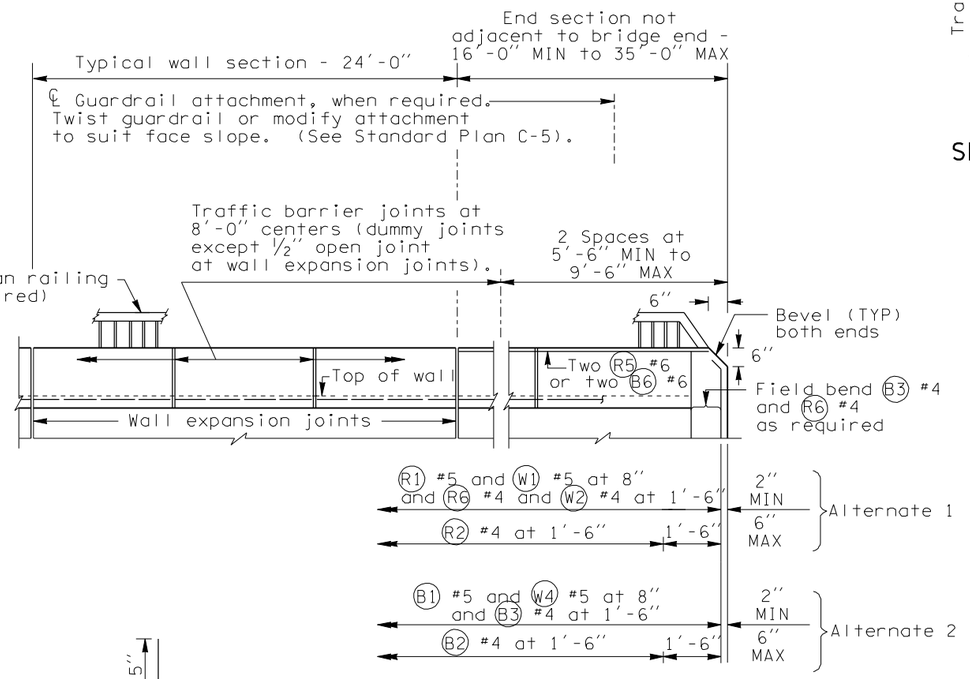

WALL ELEVATION

WALL DESIGN WITH SLOPING FRONT FACE AND 2' SURCHARGE OR TRAFFIC BARRIER

JEROME A. WEIGEL
STATE OF WASHINGTON
14742
REGISTERED
PROFESSIONAL ENGINEER

EXPIRES JUNE 29, 2000

NOTE: THIS PLAN IS NOT A LEGAL ENGINEERING DOCUMENT BUT AN ELECTRONIC DUPLICATE. THE ORIGINAL, SIGNED BY THE ENGINEER AND APPROVED FOR PUBLICATION, IS KEPT ON FILE AT THE WASHINGTON STATE DEPARTMENT OF TRANSPORTATION. A COPY MAY BE OBTAINED UPON REQUEST.

REINFORCED CONCRETE RETAINING WALL TYPE 2 AND 2 SW STANDARD PLAN D-1b

SHEET 2 OF 2 SHEETS

APPROVED FOR PUBLICATION

Clifford E. Mansfield — DEPUTY STATE DESIGN ENGINEER — *10/06/99* — DATE

WASHINGTON STATE DEPARTMENT OF TRANSPORTATION
OLYMPIA, WASHINGTON

DATE	REVISION	BY
10/99	New approval date.	TWS

EFFECTIVE: APRIL 2, 2007 TO JANUARY 6, 2008

EFFECTIVE: APRIL 2, 2007 TO JANUARY 6, 2008

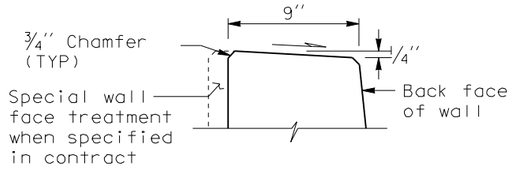

WALL TOP DETAIL

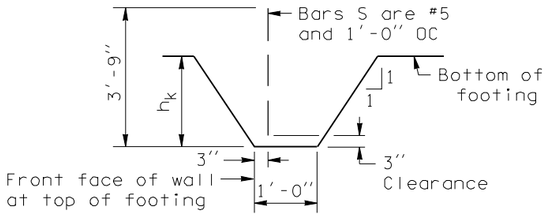

Not required on walls H = 5' thru H = 12'

KEY DETAIL

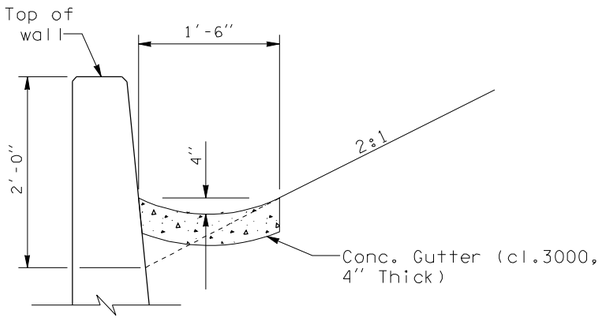

GUTTER DETAIL

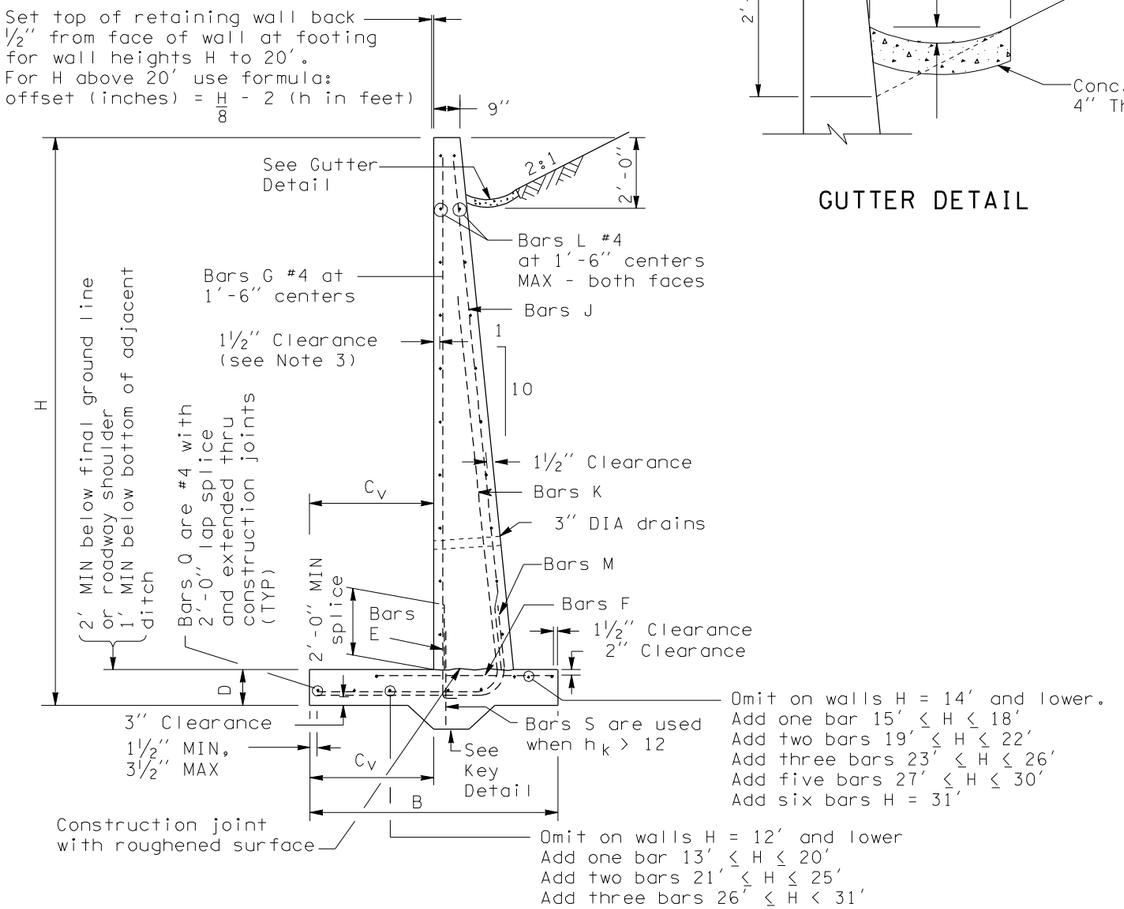

SECTION - VERTICAL FACE

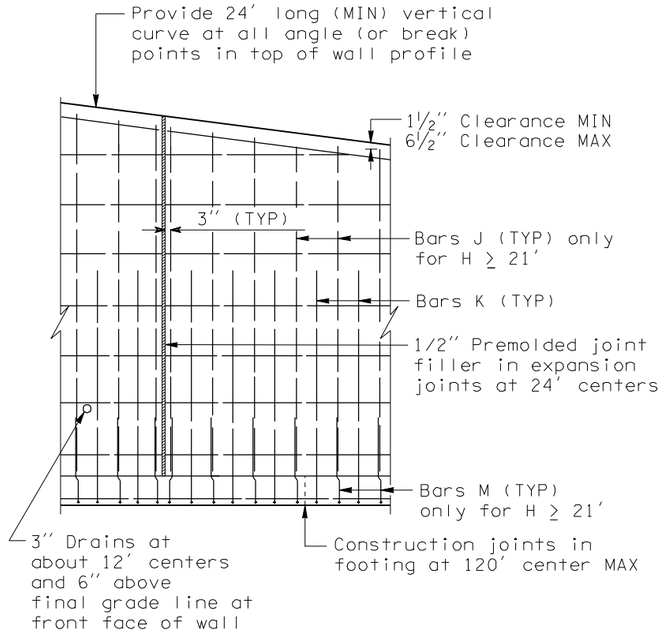

ELEVATION

NOTES

1. All concrete shall be Class 4000 except as noted.
2. For backfill requirements, see Standard Plan "D-4".
3. When Wall Type 3-SW (saltwater) is specified, the concrete cover over steel in the front face and the total wall thickness shall be increased by 1".
4. When Wall Type 3-SW (saltwater) is specified, concrete in the table column "Material Quantity" shall be increased by 0.003 x H CY/LF.
5. Concrete in the 24 foot wall sections shall be placed separately between expansion joints with a minimum 12 hour period between concrete placement.

WALL DESIGN WITH VERTICAL FRONT FACE AND 2:1 BACKSLOPE

JEROME A. WEIGEL — STATE OF WASHINGTON — 14742 — REGISTERED PROFESSIONAL ENGINEER

EXPIRES JUNE 29, 2000

NOTE: THIS PLAN IS NOT A LEGAL ENGINEERING DOCUMENT BUT AN ELECTRONIC DUPLICATE. THE ORIGINAL, SIGNED BY THE ENGINEER AND APPROVED FOR PUBLICATION, IS KEPT ON FILE AT THE WASHINGTON STATE DEPARTMENT OF TRANSPORTATION. A COPY MAY BE OBTAINED UPON REQUEST.

REINFORCED CONCRETE RETAINING WALL TYPE 3 AND 3 SW STANDARD PLAN D-1c

SHEET 1 OF 2 SHEETS

APPROVED FOR PUBLICATION

Clifford E. Mansfield — *10/06/99*

DEPUTY STATE DESIGN ENGINEER — DATE

WASHINGTON STATE DEPARTMENT OF TRANSPORTATION
OLYMPIA, WASHINGTON

DATE	REVISION	BY
10/99	Added note 5.	TWS

EFFECTIVE: APRIL 2, 2007 TO JANUARY 6, 2008

EFFECTIVE: APRIL 2, 2007 TO JANUARY 6, 2008

DIMENSIONS					FOOTING REINFORCEMENT																STEM REINFORCEMENT				MATERIAL QUANTITY		
					BAR E (size #4)		BAR F			BAR K					BAR M					BAR J			BAR G (size #4)			
H (ft)	B	C_V	D	h_k	LENGTH	h	SIZE	SPACING	LENGTH	SIZE	SPACING	LENGTH	h	b	SIZE	SPACING	LENGTH	h	b	SIZE	SPACING	LENGTH	LENGTH	CONCRETE (CY/LF)	STEEL (LBS/LF)	H (ft)
5	3′-0″	1′-3″	1′-0″	0	3′-5″	2′-9″	#4	1′-0″	2′-6″	#5	1′-0″	6′-6″	4′-7″	2′-4″	N/A	N/A	N/A	N/A	N/A	N/A	N/A	N/A	3′-10″	0.252	21.698	5
6	3′-6″	1′-6″	1′-0″	0	3′-5″	2′-9″	#4	1′-0″	2′-6″	#5	1′-0″	7′-10″	5′-7″	2′-8″	N/A	N/A	N/A	N/A	N/A	N/A	N/A	N/A	4′-10″	0.315	24.870	6
7	3′-9″	1′-9″	1′-0″	0	3′-5″	2′-9″	#4	1′-0″	2′-6″	#5	1′-0″	9′-2″	6′-7″	3′-0″	N/A	N/A	N/A	N/A	N/A	N/A	N/A	N/A	5′-10″	0.372	26.706	7
8	4′-3″	1′-9″	1′-0″	0	3′-5″	2′-9″	#4	1′-0″	2′-6″	#5	1′-0″	10′-2″	7′-7″	3′-0″	N/A	N/A	N/A	N/A	N/A	N/A	N/A	N/A	6′-10″	0.443	29.531	8
9	4′-9″	2′-0″	1′-0″	0	3′-5″	2′-9″	#4	1′-0″	2′-6″	#5	1′-0″	11′-6″	8′-7″	3′-4″	N/A	N/A	N/A	N/A	N/A	N/A	N/A	N/A	7′-10″	0.517	32.703	9
10	5′-3″	2′-3″	1′-0″	0	3′-5″	2′-9″	#4	1′-0″	2′-6″	#5	1′-0″	12′-11″	9′-7″	3′-9″	N/A	N/A	N/A	N/A	N/A	N/A	N/A	N/A	8′-10″	0.594	34.625	10
11	6′-0″	2′-9″	1′-0″	0	3′-5″	2′-9″	#4	10″	2′-8″	#5	10″	14′-6″	10′-7″	4′-4″	N/A	N/A	N/A	N/A	N/A	N/A	N/A	N/A	9′-10″	0.685	41.550	11
12	6′-6″	3′-0″	1′-0″	0	3′-5″	2′-9″	#4	8″	2′-10″	#5	8″	15′-4″	11′-7″	4′-8″	N/A	N/A	N/A	N/A	N/A	N/A	N/A	N/A	10′-10″	0.770	49.874	12
13	7′-0″	3′-3″	1′-0″	1′-0″	3′-5″	2′-9″	#5	10″	3′-4″	#5	7″	17′-2″	12′-7″	5′-0″	N/A	N/A	N/A	N/A	N/A	N/A	N/A	N/A	11′-10″	0.933	62.676	13
14	7′-9″	3′-6″	1′-0″	1′-0″	3′-5″	2′-9″	#5	7″	3′-8″	#6	7″	18′-7″	13′-7″	5′-4″	N/A	N/A	N/A	N/A	N/A	N/A	N/A	N/A	12′-10″	1.035	83.997	14
15	8′-6″	3′-9″	1′-0″	1′-0″	3′-6″	2′-9″	#5	6″	4′-1″	#6	6″	20′-0″	14′-7″	5′-9″	N/A	N/A	N/A	N/A	N/A	N/A	N/A	N/A	13′-10″	1.141	100.638	15
16	9′-3″	4′-0″	1′-3″	1′-0″	3′-8″	2′-9″	#6	6″	5′-0″	#6	6″	21′-4″	15′-7″	6′-1″	N/A	N/A	N/A	N/A	N/A	N/A	N/A	N/A	14′-10″	1.315	111.591	16
17	10′-0″	4′-3″	1′-3″	1′-0″	3′-8″	3′-0″	#6	6″	5′-5″	#6	5″	22′-8″	16′-7″	6′-5″	N/A	N/A	N/A	N/A	N/A	N/A	N/A	N/A	15′-7″	1.434	118.632	17
18	10′-6″	4′-3″	1′-6″	1′-0″	3′-8″	3′-0″	#6	5″	5′-10″	#6	5″	23′-8″	17′-7″	6′-6″	N/A	N/A	N/A	N/A	N/A	N/A	N/A	N/A	16′-7″	1.620	126.835	18
19	11′-3″	4′-6″	1′-6″	1′-6″	3′-11″	3′-3″	#7	6″	7′-1″	#6	6″	26′-0″	18′-7″	6′-10″	N/A	N/A	N/A	N/A	N/A	N/A	N/A	N/A	17′-4″	1.817	168.319	19
20	12′-0″	4′-6″	1′-9″	1′-6″	4′-2″	3′-6″	#7	5″	7′-9″	#7	5″	26′-2″	19′-7″	7′-0″	N/A	N/A	N/A	N/A	N/A	N/A	N/A	N/A	18′-1″	2.040	203.989	20
21	12′-6″	5′-0″	2′-0″	1′-6″	4′-5″	3′-9″	#8	8″	8′-8″	#7	11″	19′-11″	12′-11″	7′-7″	#8	11″	12′-9″	5′-9″	7′-7″	#8	11″	18′-11″	18′-11″	2.261	225.015	21
22	13′-6″	5′-3″	2′-3″	1′-6″	4′-8″	4′-0″	#8	7″	9′-1″	#8	11″	20′-9″	13′-5″	7′-11″	#8	11″	13′-4″	6′-1″	7′-11″	#8	11″	19′-8″	19′-7″	2.514	239.973	22
23	14′-0″	5′-6″	2′-3″	1′-6″	4′-8″	4′-0″	#8	6″	9′-6″	#8	10″	21′-6″	13′-10″	8′-3″	#8	10″	13′-8″	6′-1″	8′-3″	#8	10″	20′-8″	20′-7″	2.679	272.571	23
24	14′-9″	5′-9″	2′-6″	1′-6″	4′-11″	4′-3″	#8	6″	9′-11″	#8	9″	22′-4″	14′-4″	8′-8″	#8	9″	14′-4″	6′-4″	8′-8″	#8	9″	21′-5″	21′-4″	2.958	304.464	24
25	15′-6″	6′-0″	2′-9″	1′-6″	5′-2″	4′-6″	#8	6″	10′-4″	#8	10″	24′-4″	16′-0″	9′-0″	#9	10″	15′-10″	7′-8″	9′-0″	#9	10″	22′-2″	22′-1″	3.252	335.260	25
26	16′-3″	6′-3″	3′-0″	1′-6″	5′-5″	4′-9″	#8	5″	10′-9″	#9	9″	25′-2″	16′-6″	9′-4″	#9	9″	16′-5″	7′-11″	9′-4″	#9	9″	22′-11″	22′-10″	3.563	386.608	26
27	16′-9″	6′-6″	3′-3″	1′-6″	5′-8″	5′-0″	#8	5″	10′-11″	#9	8″	25′-11″	17′-0″	9′-8″	#9	8″	17′-0″	8′-2″	9′-8″	#9	8′	23′-8″	23′-7″	3.859	432.355	27
28	17′-6″	6′-9″	3′-6″	1′-6″	5′-11″	5′-3″	#8	5″	11′-5″	#9	8″	25′-10″	17′-7″	10′-0″	#9	8″	17′-7″	8′-5″	10′-0″	#9	8″	24′-6″	24′-4″	4.200	448.327	28
29	18′-3″	7′-0″	3′-9″	1′-6″	6′-2″	5′-6″	#8	5″	11′-10″	#9	9″	29′-0″	19′-5″	10′-4″	#10	9″	19′-5″	10′-0″	10′-4″	#10	9″	25′-3″	25′-1″	4.556	494.468	29
30	19′-0″	7′-3″	4′-0″	1′-6″	6′-5″	5′-9″	#9	6″	13′-4″	#10	8″	30′-0″	20′-0″	10′-9″	#10	8″	20′-1″	10′-3″	10′-9″	#10	8″	26′-0″	25′-10″	4.928	534.648	30
31	19′-6″	7′-6″	4′-3″	1′-6″	6′-8″	6′-0″	#9	5″	13′-6″	#10	8″	30′-10″	20′-6″	11′-1″	#10	8″	20′-8″	11′-1″	11′-1″	#10	8″	26′-9″	26′-7″	5.277	559.628	31

Bar	MIN Splice
#4	2′-0″
#5	2′-0″
#6	2′-1″
#7	2′-11″
#8	3′-9″
#9	4′-9″
#10	6′-1″

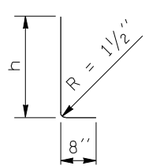

BAR E
at 1′-6″ centers

Bar	Radius
#5	9″
#6	11″
#7	1′-1″
#8	1′-3″
#9	1′-6″
#10	1′-8″

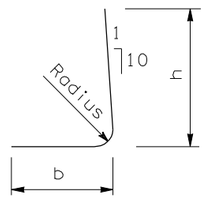

BARS K AND M

WALL DESIGN WITH VERTICAL
FRONT FACE AND 2:1 BACKSLOPE

JEROME A. WEIGEL
STATE OF WASHINGTON
14742
REGISTERED
PROFESSIONAL ENGINEER

EXPIRES JUNE 29, 2000

NOTE: THIS PLAN IS NOT A LEGAL ENGINEERING DOCUMENT BUT AN ELECTRONIC DUPLICATE. THE ORIGINAL, SIGNED BY THE ENGINEER AND APPROVED FOR PUBLICATION, IS KEPT ON FILE AT THE WASHINGTON STATE DEPARTMENT OF TRANSPORTATION. A COPY MAY BE OBTAINED UPON REQUEST.

REINFORCED CONCRETE RETAINING WALL TYPE 3 AND 3 SW STANDARD PLAN D-1c

SHEET 2 OF 2 SHEETS

APPROVED FOR PUBLICATION

Clifford E. Mansfield — DEPUTY STATE DESIGN ENGINEER — *10/06/99* DATE

WASHINGTON STATE DEPARTMENT OF TRANSPORTATION
OLYMPIA, WASHINGTON

DATE	REVISION	BY
10/99	New approval date.	TWS

EFFECTIVE: APRIL 2, 2007 TO JANUARY 6, 2008

EFFECTIVE: APRIL 2, 2007 TO JANUARY 6, 2008

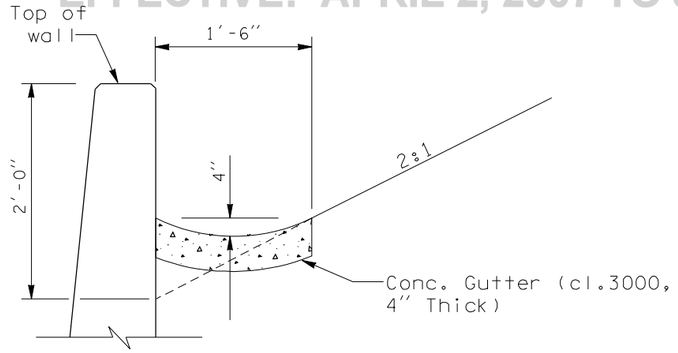

GUTTER DETAIL

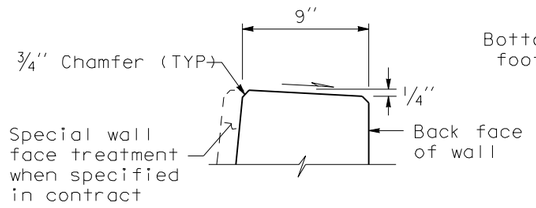

WALL TOP DETAIL

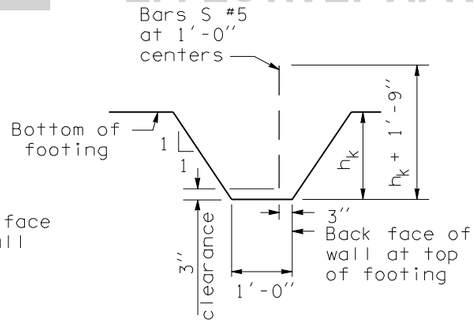

Not required on walls H = 5" thru H = 14'

KEY DETAIL

NOTES

1. All concrete shall be Class 4000 except as noted.
2. For backfill requirements, see Standard Plan "D-4".
3. When Wall Type 4-SW (saltwater) is specified, the concrete cover over steel in the front face and the total wall thickness shall be increased by 1".
4. When Wall Type 4-SW (saltwater) is specified, concrete in the table column "Material Quantity" shall be increased by 0.003 x H CY/LF.
5. Concrete in the 24 foot wall sections shall be placed separately between expansion joints with a minimum 12 hour period between concrete placement.

Bar	MIN Splice
#4	2'-0"
#5	2'-0"
#6	2'-1"
#7	2'-11"
#8	3'-9"
#9	4'-9"
#10	6'-1"

Bar	Radius
#5	9"
#6	11"
#7	1'-1"
#8	1'-3"
#9	1'-6"
#10	1'-8"

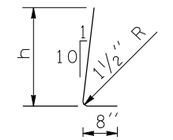

BAR E
At 1'-6" centers

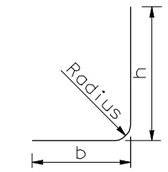

BARS K AND M

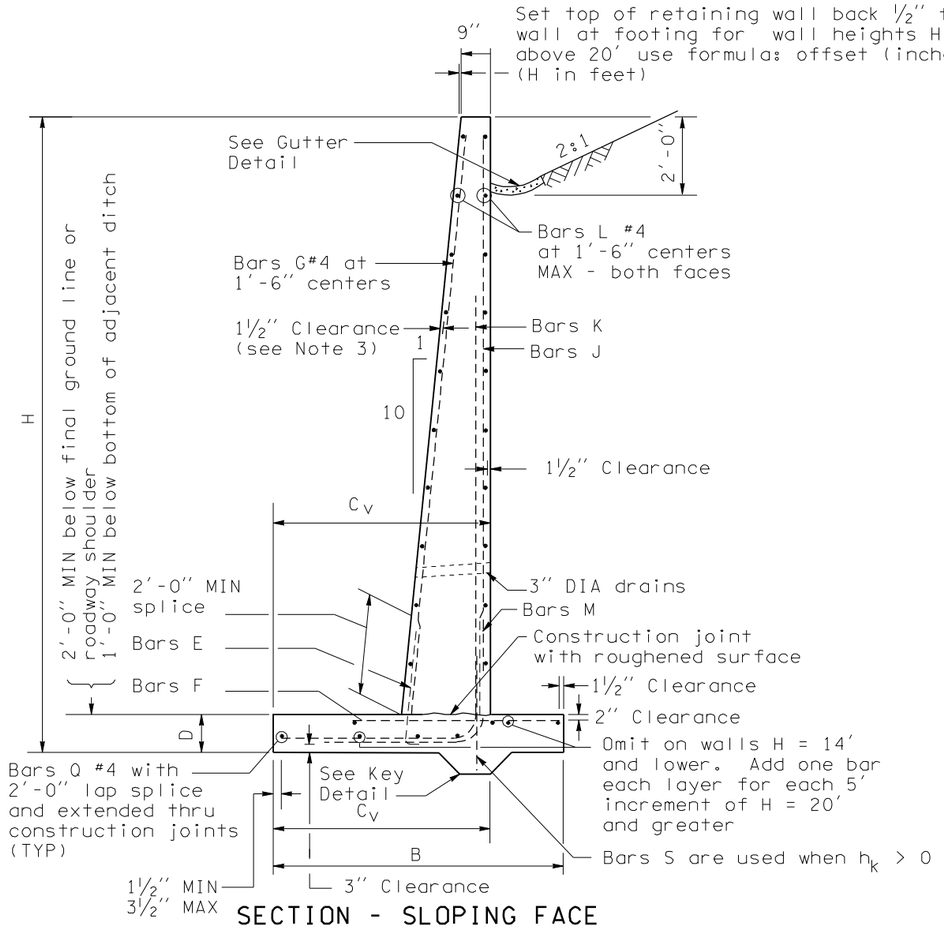

SECTION - SLOPING FACE

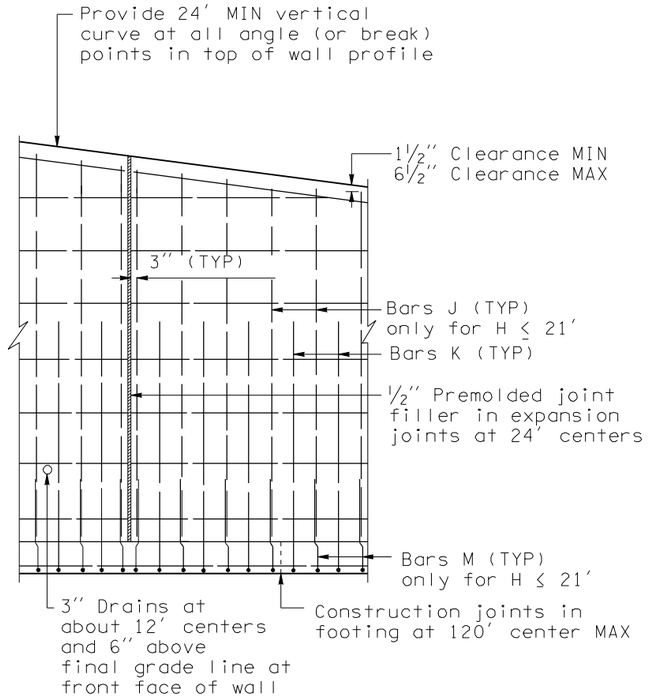

ELEVATION

WALL DESIGN WITH SLOPING FRONT FACE AND 2:1 BACKSLOPE

JEROME A. WEIGEL
STATE OF WASHINGTON
14742
REGISTERED PROFESSIONAL ENGINEER

EXPIRES JUNE 29, 2000

NOTE: THIS PLAN IS NOT A LEGAL ENGINEERING DOCUMENT BUT AN ELECTRONIC DUPLICATE. THE ORIGINAL, SIGNED BY THE ENGINEER AND APPROVED FOR PUBLICATION, IS KEPT ON FILE AT THE WASHINGTON STATE DEPARTMENT OF TRANSPORTATION. A COPY MAY BE OBTAINED UPON REQUEST.

REINFORCED CONCRETE RETAINING WALL TYPE 4 AND 4 SW STANDARD PLAN D-1d

SHEET 1 OF 2 SHEETS

APPROVED FOR PUBLICATION

Clifford E. Mansfield — DEPUTY STATE DESIGN ENGINEER — *10/06/99* DATE

WASHINGTON STATE DEPARTMENT OF TRANSPORTATION
OLYMPIA, WASHINGTON

DATE	REVISION	BY
10/99	Added note 5.	TWS

EFFECTIVE: APRIL 2, 2007 TO JANUARY 6, 2008

EFFECTIVE: APRIL 2, 2007 TO JANUARY 6, 2008

DIMENSIONS					FOOTING REINFORCEMENT															STEM REINFORCEMENT				MATERIAL QUANTITY		
					BAR E (size #4)		BAR F				BAR K				BAR M					BAR J			BAR G (size #4)			
H (ft)	B	C_v	D	h_k	LENGTH	h	SIZE	SPACE	LENGTH	SIZE	SPACE	LENGTH	h	b	SIZE	SPACE	LENGTH	h	b	SIZE	SPACE	LENGTH	LENGTH	CONCRETE (CY/LF)	STEEL (LBS/LF)	H (ft)
5	2'-6"	1'-9"	1'-0"	0	3'-5"	2'-9"	#4	1'-0"	2'-0"	#5	1'-0"	5'-7"	4'-7"	1'-4"	N/A	N/A	N/A	N/A	N/A	N/A	N/A	N/A	3'-10"	0.233	19.072	5
6	2'-9"	1'-9"	1'-0"	0	3'-5"	2'-9"	#4	1'-0"	2'-3"	#5	1'-0"	6'-7"	5'-7"	1'-4"	N/A	N/A	N/A	N/A	N/A	N/A	N/A	N/A	4'-10"	0.287	22.063	6
7	3'-0"	2'-3"	1'-0"	0	3'-5"	2'-9"	#4	1'-0"	2'-3"	#5	1'-0"	8'-1"	6'-7"	1'-10"	N/A	N/A	N/A	N/A	N/A	N/A	N/A	N/A	5'-10"	0.344	23.906	7
8	3'-6"	2'-6"	1'-0"	0	3'-5"	2'-9"	#4	1'-0"	2'-3"	#5	1'-0"	9'-4"	7'-7"	2'-1"	N/A	N/A	N/A	N/A	N/A	N/A	N/A	N/A	6'-10"	0.415	27.158	8
9	4'-0"	3'-0"	1'-0"	0	3'-5"	2'-9"	#4	1'-0"	2'-3"	#5	1'-0"	10'-10"	8'-7"	2'-8"	N/A	N/A	N/A	N/A	N/A	N/A	N/A	N/A	7'-10"	0.489	30.504	9
10	4'-6"	3'-6"	1'-0"	0	3'-5"	2'-9"	#4	1'-0"	2'-3"	#5	1'-0"	12'-4"	9'-7"	3'-1"	N/A	N/A	N/A	N/A	N/A	N/A	N/A	N/A	8'-10"	0.567	33.182	10
11	5'-3"	3'-9"	1'-0"	0	3'-5"	2'-9"	#4	1'-0"	2'-9"	#5	1'-0"	13'-7"	10'-7"	3'-4"	N/A	N/A	N/A	N/A	N/A	N/A	N/A	N/A	9'-11"	0.657	38.638	11
12	6'-0"	4'-0"	1'-0"	0	3'-5"	2'-9"	#4	1'-0"	3'-3"	#5	10"	14'-10"	11'-7"	3'-8"	N/A	N/A	N/A	N/A	N/A	N/A	N/A	N/A	10'-11"	0.752	43.820	12
13	6'-6"	4'-6"	1'-0"	0	3'-5"	2'-9"	#4	10"	3'-3"	#5	9"	16'-4"	12'-7"	4'-1"	N/A	N/A	N/A	N/A	N/A	N/A	N/A	N/A	11'-11"	0.841	48.848	13
14	7'-3"	4'-9"	1'-3"	0	3'-8"	3'-0"	#4	9"	3'-9"	#5	7"	17'-7"	13'-7"	4'-4"	N/A	N/A	N/A	N/A	N/A	N/A	N/A	N/A	12'-8"	0.920	60.089	14
15	7'-6"	5'-0"	1'-3"	0	3'-8"	3'-0"	#4	8"	3'-9"	#6	8"	18'-10"	14'-7"	4'-8"	N/A	N/A	N/A	N/A	N/A	N/A	N/A	N/A	13'-8"	1.218	76.409	15
16	8'-3"	5'-3"	1'-3"	0	3'-8"	3'-0"	#5	8"	4'-7"	#6	7"	20'-0"	15'-7"	4'-10"	N/A	N/A	N/A	N/A	N/A	N/A	N/A	N/A	14'-8"	1.333	89.333	16
17	9'-0"	5'-6"	1'-3"	0	3'-8"	3'-0"	#5	8"	5'-1"	#6	6"	21'-3"	16'-7"	5'-1"	N/A	N/A	N/A	N/A	N/A	N/A	N/A	N/A	15'-8"	1.452	104.903	17
18	9'-9"	5'-6"	1'-3"	0	3'-8"	3'-0"	#6	6"	6'-4"	#6	5"	22'-3"	17'-7"	5'-1"	N/A	N/A	N/A	N/A	N/A	N/A	N/A	N/A	16'-8"	1.575	132.792	18
19	10'-6"	5'-9"	1'-6"	1'-6"	3'-11"	3'-3"	#6	5"	6'-10"	#7	6"	23'-5"	18'-7"	5'-4"	N/A	N/A	N/A	N/A	N/A	N/A	N/A	N/A	17'-5"	1.775	157.038	19
20	11'-3"	6'-0"	1'-9"	1'-6"	4'-2"	3'-6"	#6	5"	7'-4"	#7	5"	24'-9"	19'-7"	5'-8"	N/A	N/A	N/A	N/A	N/A	N/A	N/A	N/A	18'-2"	1.992	184.972	20
21	12'-0"	6'-3"	2'-0"	1'-6"	4'-4"	3'-9"	#6	5"	7'-10"	#8	11"	14'-1"	8'-10"	5'-10"	#8	11"	11'-1"	5'-10"	5'-10"	#8	11"	18'-10"	18'-11"	2.224	195.265	21
22	12'-6"	6'-6"	2'-0"	1'-6"	4'-4"	3'-9"	#7	5"	8'-11"	#8	10"	14'-9"	9'-3"	6'-2"	#8	10"	11'-4"	5'-10"	6'-1"	#8	10"	19'-10"	19'-11"	2.405	231.507	22
23	13'-0"	7'-0"	2'-0"	2'-0"	4'-4"	3'-9"	#7	5"	8'-11"	#8	10"	15'-8"	9'-7"	6'-8"	#8	10"	11'-11"	5'-10"	6'-8"	#8	10"	20'-10"	20'-11"	2.585	240.484	23
24	13'-9"	7'-3"	2'-3"	2'-0"	4'-8"	4'-0"	#7	5"	9'-5"	#8	9"	16'-4"	10'-1"	6'-10"	#8	9"	12'-4"	6'-1"	6'-10"	#8	9"	21'-7"	21'-8"	2.848	269.186	24
25	14'-3"	7'-6"	2'-3"	2'-6"	4'-8"	4'-0"	#8	5"	10'-8"	#9	10"	16'-11"	10'-6"	7'-1"	#9	10"	13'-7"	7'-2"	7'-1"	#9	10"	22'-7"	22'-8"	3.102	331.336	25
26	15'-0"	7'-9"	2'-3"	2'-6"	4'-8"	4'-0"	#8	5"	11'-2"	#9	9"	17'-6"	10'-10"	7'-4"	#9	9"	13'-10"	7'-2"	7'-4"	#9	9"	23'-7"	23'-8"	3.278	367.361	26
27	15'-6"	8'-3"	2'-6"	2'-6"	4'-11"	4'-3"	#8	5"	11'-2"	#9	8"	18'-7"	11'-5"	7'-10"	#9	8"	14'-5"	7'-5"	7'-10"	#9	8"	24'-4"	24'-5"	3.551	414.105	27
28	16'-0"	8'-9"	2'-6"	2'-6"	4'-11"	4'-3"	#9	5"	11'-2"	#9	8"	19'-5"	11'-9"	8'-4"	#9	8"	15'-1"	7'-5"	8'-4"	#9	10"	25'-4"	25'-6"	3.718	426.488	28
29	16'-9"	9'-0"	2'-9"	2'-6"	5'-2"	4'-6"	#9	5"	12'-9"	#10	9"	20'-3"	12'-4"	8'-8"	#10	9"	16'-11"	9'-0"	8'-8"	#10	9"	26'-1"	26'-3"	4.035	519.157	29
30	17'-6"	9'-3"	3'-0"	2'-6"	5'-5"	4'-9"	#9	5"	13'-3"	#10	8"	20'-11"	12'-10"	8'-10"	#10	8"	17'-4"	9'-3"	8'-10"	#10	8"	26'-10"	27'-0"	4.369	580.877	30
31	18'-0"	9'-6"	3'-0"	3'-0"	5'-5"	4'-9"	#9	5"	13'-6"	#10	8"	21'-7"	13'-3"	9'-1"	#10	8"	17'-7"	9'-3"	9'-1"	#10	8"	27'-10"	28'-0"	4.674	597.591	31
32	18'-9"	9'-9"	3'-3"	3'-6"	5'-8"	5'-0"	#9	5"	14'-0"	#10	8"	22'-2"	13'-9"	9'-4"	#10	8"	19'-5"	11'-0"	9'-4"	#10	8"	28'-7"	28'-9"	5.170	730.715	32
33	19'-3"	10'-0"	3'-6"	3'-6"	5'-11"	5'-3"	#10	5"	14'-3"	#10	8"	23'-0"	14'-3"	9'-8"	#10	8"	20'-0"	11'-3"	9'-8"	#10	8"	29'-4"	29'-6"	5.510	751.136	33

WALL DESIGN WITH SLOPING
FRONT FACE AND 2:1 BACKSLOPE

JEROME A. WEIGEL
STATE OF WASHINGTON
14742
REGISTERED
PROFESSIONAL ENGINEER

EXPIRES JUNE 29, 2000

NOTE: THIS PLAN IS NOT A LEGAL ENGINEERING DOCUMENT BUT AN ELECTRONIC DUPLICATE. THE ORIGINAL, SIGNED BY THE ENGINEER AND APPROVED FOR PUBLICATION, IS KEPT ON FILE AT THE WASHINGTON STATE DEPARTMENT OF TRANSPORTATION. A COPY MAY BE OBTAINED UPON REQUEST.

REINFORCED CONCRETE RETAINING WALL TYPE 4 AND 4 SW STANDARD PLAN D-1d

SHEET 2 OF 2 SHEETS

DATE	REVISION	BY
10/99	New approval date.	TWS

APPROVED FOR PUBLICATION

Clifford E. Mansfield — DEPUTY STATE DESIGN ENGINEER — *10/06/99* DATE

WASHINGTON STATE DEPARTMENT OF TRANSPORTATION
OLYMPIA, WASHINGTON

EFFECTIVE: APRIL 2, 2007 TO JANUARY 6, 2008

EFFECTIVE: APRIL 2, 2007 TO JANUARY 6, 2008

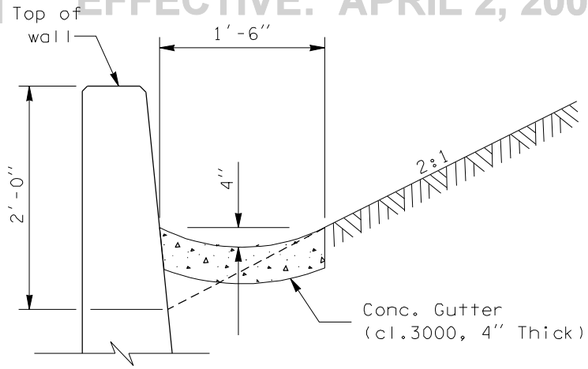

GUTTER DETAIL

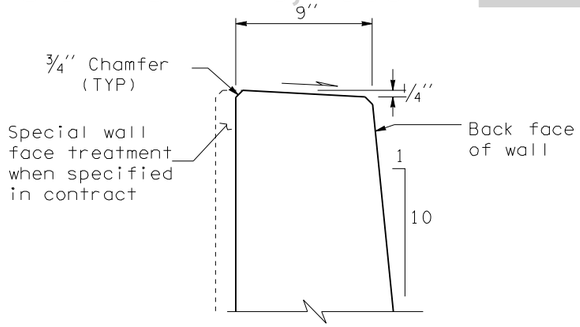

WALL TOP DETAIL

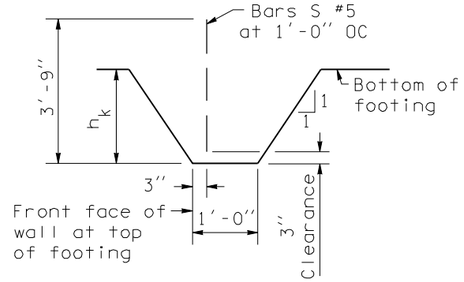

KEY DETAIL

Not required on
walls H = 5'
thru H = 25'

NOTES

1. All concrete shall be Class 4000 except as noted.
2. For backfill requirements, see Standard Plan "D-4".
3. When Wall Type 5-SW (saltwater) is specified, the concrete cover over steel in the front face and the total wall thickness shall be increased by 1".
4. When Wall Type 5-SW (saltwater) is specified, concrete in the table column "Material Quantity" shall be increased by 0.003 x H CY/LF.
5. Concrete in the 24 foot wall sections shall be placed separately between expansion joints with a minimum 12 hour period between concrete placement.

Bar	MIN Splice
#4	2'-0"
#5	2'-0"
#6	2'-1"
#7	2'-11"
#8	3'-9"
#9	4'-9"
#10	6'-1"

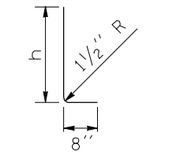

BAR E

At 1'-6" centers

Bar	Radius
#5	9"
#6	11"
#7	1'-1"
#8	1'-6"
#9	1'-8"
#10	2'-8"

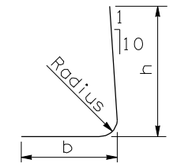

BARS K AND M

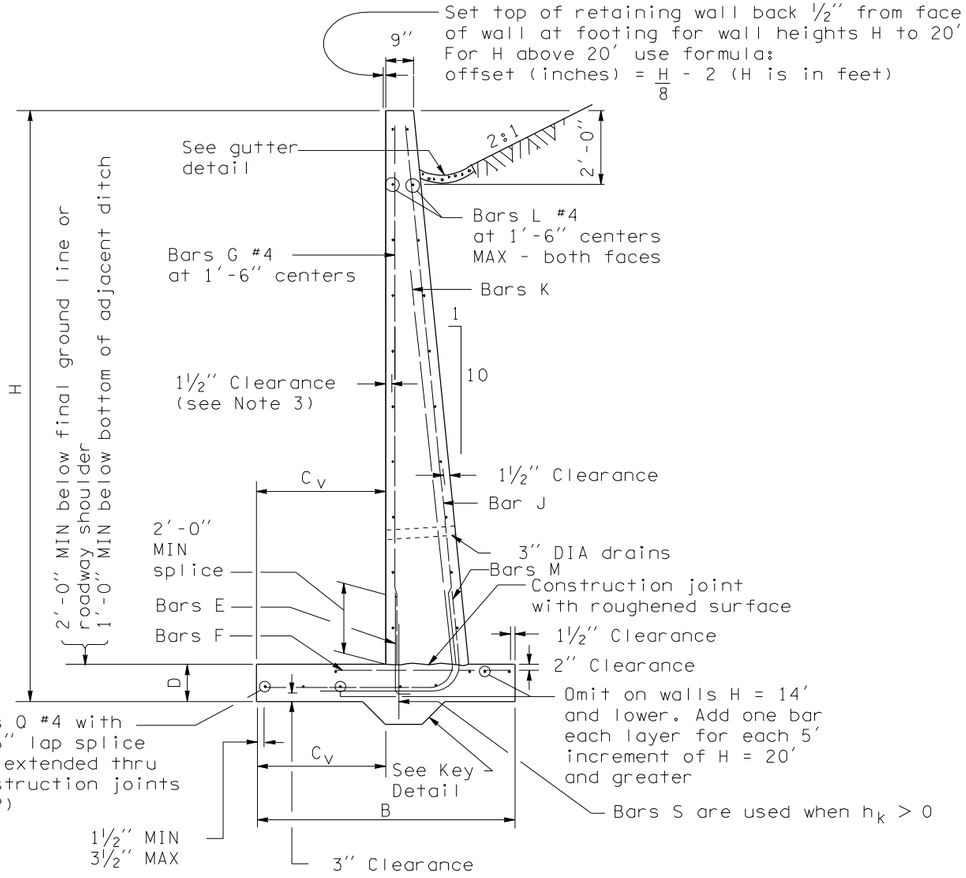

SECTION - VERTICAL FACE

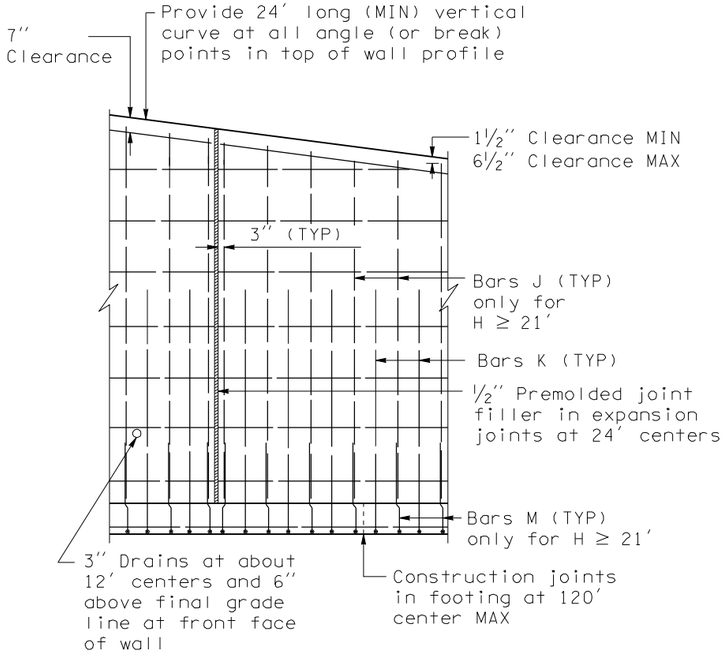

ELEVATION

WALL DESIGN WITH VERTICAL
FRONT FACE AND 2:1 BACKSLOPE



EXPIRES JUNE 29, 2002

NOTE: THIS PLAN IS NOT A LEGAL ENGINEERING DOCUMENT BUT AN ELECTRONIC DUPLICATE. THE ORIGINAL, SIGNED BY THE ENGINEER AND APPROVED FOR PUBLICATION, IS KEPT ON FILE AT THE STATE DEPARTMENT OF TRANSPORTATION. A COPY MAY BE OBTAINED UPON REQUEST.

REINFORCED CONCRETE RETAINING WALL TYPE 5 AND 5 SW STANDARD PLAN D-1e

SHEET 1 OF 2 SHEETS

APPROVED FOR PUBLICATION

Harold J. Peterfeso *01-23-02*

STATE DESIGN ENGINEER — DATE

Washington State Department of Transportation

DATE	REVISION	BY
8/01	New Approval Date	MAS

EFFECTIVE: APRIL 2, 2007 TO JANUARY 6, 2008

EFFECTIVE: APRIL 2, 2007 TO JANUARY 6, 2008

DIMENSIONS					FOOTING REINFORCEMENT															STEM REINFORCEMENT				MATERIAL QUANTITY		
					BAR E (size #4)		BAR F			BAR K					BAR M					BAR J			BAR G (size #4)			
H (ft)	B	C_V	D	h_k	LENGTH	h	SIZE	SPAC.	LENGTH	SIZE	SPAC.	LENGTH	h	b	SIZE	SPAC.	LENGTH	h	b	SIZE	SPAC.	LENGTH	LENGTH	CONCRETE (CY/LF)	STEEL (lbs/LF)	H (ft)
5	3'-0"	1'-0"	1'-0"	0	3'-5"	2'-9"	#4	1'-0"	2'-0"	#5	1'-0"	6'-3"	4'-7"	2'-0"	N/A	N/A	N/A	N/A	N/A	N/A	N/A	N/A	3'-10"	0.252	21.017	5
6	3'-0"	1'-0"	1'-0"	0	3'-5"	2'-9"	#4	1'-0"	2'-0"	#5	1'-0"	7'-3"	5'-7"	2'-1"	N/A	N/A	N/A	N/A	N/A	N/A	N/A	N/A	4'-10"	0.296	23.928	6
7	3'-3"	1'-0"	1'-0"	0	3'-5"	2'-9"	#4	1'-0"	2'-1"	#5	1'-0"	8'-4"	6'-7"	2'-2"	N/A	N/A	N/A	N/A	N/A	N/A	N/A	N/A	5'-10"	0.354	25.554	7
8	3'-6"	1'-0"	1'-0"	0	3'-5"	2'-9"	#4	1'-0"	2'-2"	#5	1'-0"	9'-5"	7'-7"	2'-3"	N/A	N/A	N/A	N/A	N/A	N/A	N/A	N/A	6'-10"	0.415	28.526	8
9	4'-0"	1'- 3"	1'-0"	0	3'-5"	2'-9"	#4	1'-0"	2'-4"	#5	1'-0"	10'-10"	8'-7"	2'-8"	N/A	N/A	N/A	N/A	N/A	N/A	N/A	N/A	7'-10"	0.489	31.896	9
10	4'-6"	1'- 3"	1'-0"	0	3'-5"	2'-9"	#4	10"	2'-9"	#5	1'-0"	11'-11"	9'-7"	2'-9"	N/A	N/A	N/A	N/A	N/A	N/A	N/A	N/A	8'-10"	0.567	34.117	10
11	5'-0"	1'- 6"	1'-0"	0	3'-5"	2'-9"	#5	1'-0"	3'-3"	#5	1'-0"	13'-3"	10'-7"	3'-1"	N/A	N/A	N/A	N/A	N/A	N/A	N/A	N/A	9'-10"	0.648	38.474	11
12	5'-6"	1'- 6"	1'-0"	0	3'-5"	2'-9"	#5	9"	3'-8"	#5	11"	14'-4"	11'-7"	3'-2"	N/A	N/A	N/A	N/A	N/A	N/A	N/A	N/A	10'-10"	0.733	44.454	12
13	6'-3"	1'- 9"	1'-0"	0	3'-5"	2'-9"	#5	7"	4'-1"	#5	9"	15'-8"	12'-7"	3'-6"	N/A	N/A	N/A	N/A	N/A	N/A	N/A	N/A	11'-10"	0.831	58.247	13
14	6'-9"	1'- 9"	1'-0"	0	3'-5"	2'-9"	#6	7"	4'-11"	#5	7"	16'-10"	13'-7"	3'-8"	N/A	N/A	N/A	N/A	N/A	N/A	N/A	N/A	12'-10"	0.924	68.698	14
15	7'-6"	2'-0"	1'-3"	0	3'-8"	3'-0"	#6	7"	5'-4"	#5	6"	18'-3"	14'-7"	4'-0"	N/A	N/A	N/A	N/A	N/A	N/A	N/A	N/A	13'-5"	1.079	78.188	15
16	8'-3"	2'- 3"	1'-3"	0	3'-8"	3'-0"	#6	5"	5'-9"	#5	6"	19'-6"	15'-7"	4'-4"	N/A	N/A	N/A	N/A	N/A	N/A	N/A	N/A	14'-5"	1.195	89.572	16
17	8'-9"	2'- 3"	1'-6"	0	3'-11"	3'-3"	#6	5"	6'-2"	#5	5"	20'-8"	16'-7"	4'-5"	N/A	N/A	N/A	N/A	N/A	N/A	N/A	N/A	15'-4"	1.362	104.579	17
18	9'-3"	2'- 3"	1'-6"	0	3'-11"	3'-3"	#7	6"	7'-5"	#6	6"	21'-8"	17'-7"	4'-6"	N/A	N/A	N/A	N/A	N/A	N/A	N/A	N/A	16'-4"	1.490	126.468	18
19	9'-6"	2'- 6"	1'-9"	0	4'-2"	3'-6"	#7	6"	7'-4"	#6	5"	23'-0"	18'-7"	4'-10"	N/A	N/A	N/A	N/A	N/A	N/A	N/A	N/A	17'-1"	1.646	145.732	19
20	10'-0"	3'-0"	2'-0"	0	4'-5"	3'-9"	#7	6"	7'-3"	#6	5"	24'-8"	19'-7"	5'-6"	N/A	N/A	N/A	N/A	N/A	N/A	N/A	N/A	17'-10"	1.841	151.845	20
21	10'-6"	3'-6"	2'-0"	0	4'-5"	3'-9"	#7	6"	7'-2"	#7	1'-0"	17'-5"	11'-11"	6'-1"	#7	1'-0"	10'-3"	4'-10"	6'-1"	#7	1'-0"	18'-11"	18'-10"	1.974	166.668	21
22	11'-0"	3'-9"	2'-0"	0	4'-5"	3'-9"	#7	6"	7'-4"	#7	11"	18'-2"	12'-4"	6'-5"	#7	11"	10'-7"	4'-10"	6'-5"	#7	11"	19'-11"	19'-10"	2.111	188.243	22
23	11'-6"	3'-9"	2'-3"	0	4'-8"	4'-0"	#7	6"	7'-9"	#8	1'-0"	19'-9"	13'-11"	6'-6"	#8	1'-0"	11'-11"	6'-1"	6'-6"	#8	1'-0"	20'-8"	20'-7"	2.332	209.377	23
24	12'-3"	4'-0"	2'-3"	0	4'-8"	4'-0"	#8	7"	9'-2"	#8	11"	20'-6"	14'-4"	6'-10"	#8	11"	12'-3"	6' 1"	6'-8"	#8	11"	21'-8"	21'-7"	2.501	240.204	24
25	12'-9"	4'-0"	2'-6"	0	4'-11"	4'-3"	#8	6"	9'-7"	#8	10"	21'-2"	14'-10"	7'-0"	#8	10"	12'-6"	6'-4"	7'-0"	#8	10"	22'-5"	22'-4"	2.743	282.675	25
26	13'-0"	4'-6"	2'-6"	2'-0"	4'-11"	4'-3"	#8	6"	9'-3"	#8	10"	22'-1"	15'-2"	7'-7"	#8	10"	13'-1"	6'-4"	7'-7"	#8	10"	23'-5"	23'-4"	3.101	295.370	26
27	13'-6"	4'-9"	2'-6"	2'-0"	4'-11"	4'-3"	#8	6"	9'-5"	#9	11"	23'-10"	16'-8"	7'-11"	#9	11"	14'-6"	7'-5"	7'-11"	#9	11"	24'-5"	24'-4"	3.264	332.292	27
28	14'-0"	5'-0"	2'-9"	2'-0"	5'-2"	4'-6"	#8	6"	9'-7"	#9	10"	24'-8"	17'-2"	8'-3"	#9	10"	15'-1"	7'-8"	8'-3"	#9	10"	25'-2"	25'-1"	3.530	365.742	28
29	14'-6"	5'- 6"	2'-9"	2'-0"	5'-2"	4'-6"	#8	6"	9'-5"	#9	10"	25'-8"	17'-7"	8'-10"	#9	10"	15'-7"	7'-8"	8'-10"	#9	10"	26'-2"	26'-1"	3.704	393.720	29
30	15'-0"	6'- 0"	2'-9"	2'-0"	5'-2"	4'-6"	#8	6"	9'-4"	#9	9"	26'-8"	17'-11"	9'-6"	#9	9"	16'-3"	7'-8"	9'-6"	#9	9"	27'-2"	27'-1"	3.882	440.386	30
31	15'-6"	6'- 3"	3'-0"	2'-0"	5'-5"	4'-9"	#8	6"	9'-6"	#10	10"	28'-9"	19'-9"	9'-10"	#10	10"	18'-2"	9'-3"	9'-10"	#10	10"	27'-11"	27'-11"	4.174	491.523	31
32	16'-0"	6'- 6"	3'-0"	2'-0"	5'-5"	4'-9"	#8	6"	9'-8"	#10	9"	29'-6"	20'-2"	10'-2"	#10	9"	18'-6"	9'-3"	10'-2"	#10	9"	28'-11"	28'-11"	4.363	549.081	32
33	16'-9"	6'- 9"	3'-3"	2'-0"	5'-8"	5'-0"	#9	7"	11'-2"	#10	9"	30'-4"	20'-8"	10'-6"	#10	10"	19'-1"	9'-6"	10'-6"	#10	9"	29'-8"	29'-5"	4.704	575.423	33
34	17'-3"	7'-3"	3'-6"	2'-0"	5'-11"	5'-3"	#9	7"	11'-1"	#10	9"	31'-5"	21'-3"	11'-1"	#10	9"	19'-11"	9'-9"	11'-1"	#10	9"	30'-5"	30'-4"	5.028	592.018	34
35	17'-9"	7'- 6"	3'-6"	2'-0"	5'-11"	5'-3"	#9	7"	11'-3"	#10	8"	32'-3"	21'-7"	11'-6"	#10	8"	20'-4"	9'-9"	11'-6"	#10	8"	31'-5"	31'-4"	5.236	666.586	35

WALL DESIGN WITH VERTICAL FRONT FACE AND 2:1 BACKSLOPE

JEROME A. WEIGEL
STATE OF WASHINGTON
14742
REGISTERED
PROFESSIONAL ENGINEER

EXPIRES JUNE 29, 2002

NOTE: THIS PLAN IS NOT A LEGAL ENGINEERING DOCUMENT BUT AN ELECTRONIC DUPLICATE. THE ORIGINAL, SIGNED BY THE ENGINEER AND APPROVED FOR PUBLICATION, IS KEPT ON FILE AT THE WASHINGTON STATE DEPARTMENT OF TRANSPORTATION. A COPY MAY BE OBTAINED UPON REQUEST.

REINFORCED CONCRETE RETAINING WALL TYPE 5 AND 5 SW STANDARD PLAN D-1e

APPROVED FOR PUBLICATION

Harold J. Peterfeso *01-23-02*

STATE DESIGN ENGINEER — DATE

Washington State Department of Transportation

DATE	REVISION	BY
8/01	CORRECTED TABLE	MAS

EFFECTIVE: APRIL 2, 2007 TO JANUARY 6, 2008

EFFECTIVE: APRIL 2, 2007 TO JANUARY 6, 2008

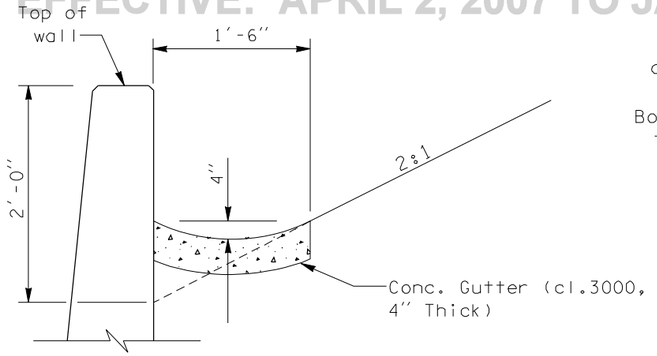

GUTTER DETAIL

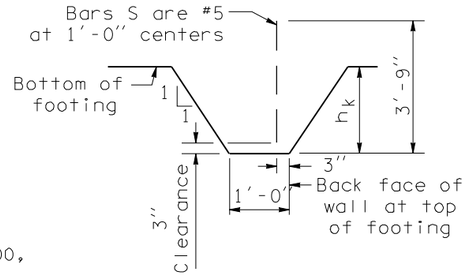

Not required on walls H = 5' thru H = 24'

KEY DETAIL

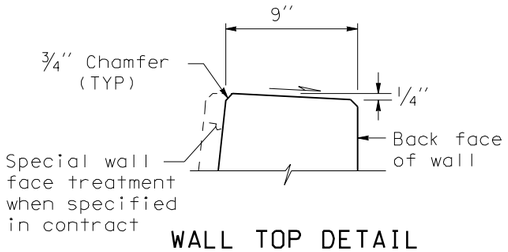

WALL TOP DETAIL

NOTES

1. All concrete shall be Class 4000 except as noted.
2. For backfill requirements, see Standard Plan "D-4".
3. When Wall Type 6-SW (saltwater) is specified, the concrete cover over steel in the front face and the total wall thickness shall be increased by 1".
4. When Wall Type 6-SW (saltwater) is specified, concrete in the table column "Material Quantity" shall be increased by 0.003 x H CY/LF.
5. Concrete in the 24 foot wall sections shall be placed separately between expansion joints with a minimum 12 hour period between concrete placement.

Bar	MIN Splice
#4	2' - 0"
#5	2' - 0"
#6	2' - 1"
#7	2' - 11"
#8	3' - 9"
#9	4' - 9"
#10	6' - 1"

Bar	Radius
#5	9"
#6	11"
#7	1' - 1"
#8	1' - 3"
#9	1' - 6"
#10	1' - 8"

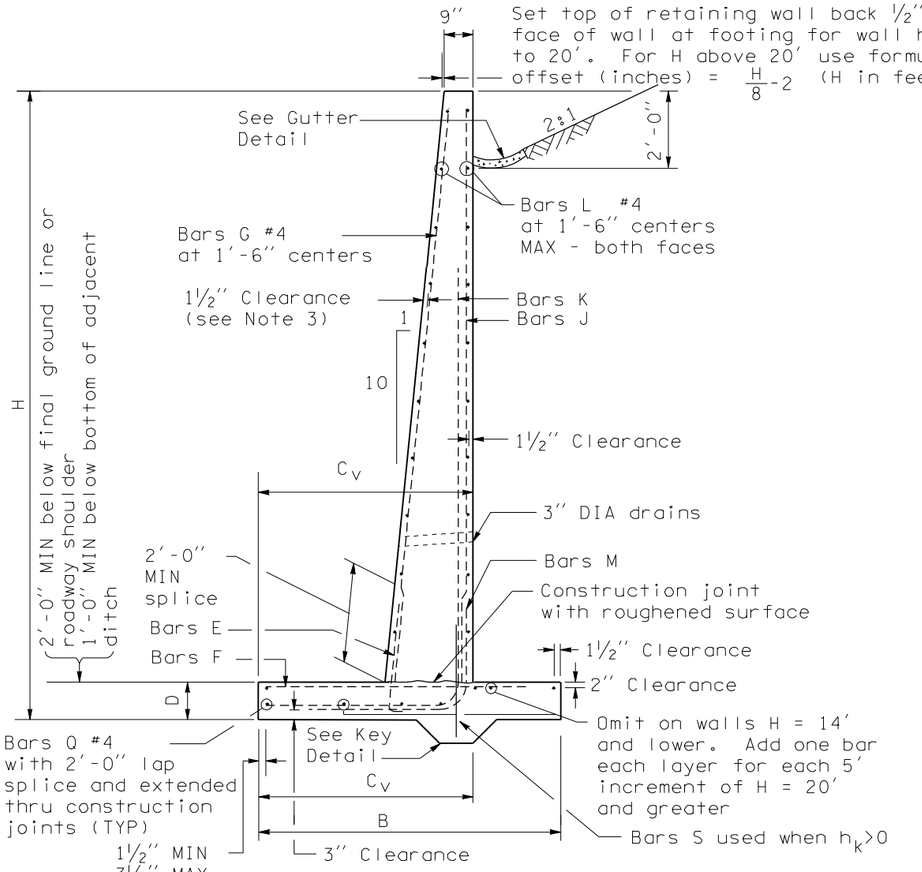

SECTION - SLOPING FACE

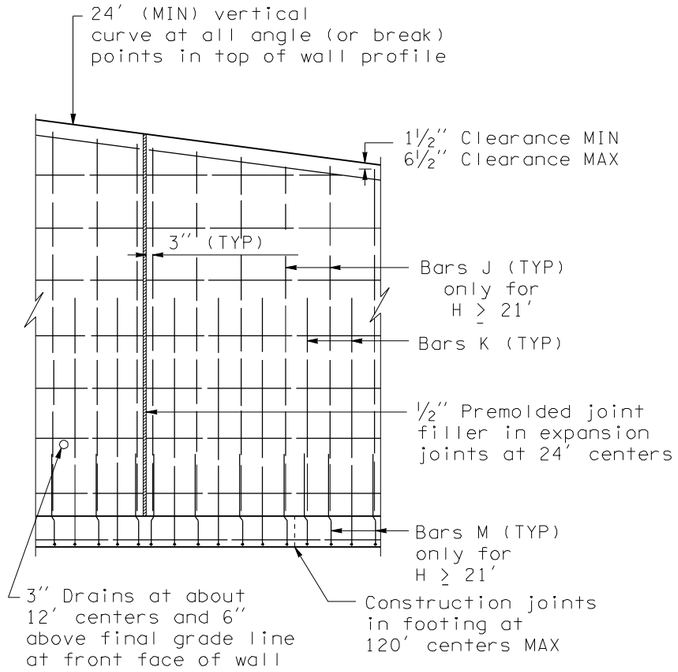

ELEVATION

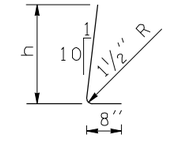

BAR E
At 1'-6" centers

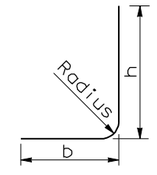

BARS K AND M

WALL DESIGN WITH SLOPING FRONT FACE AND 2:1 BACKSLOPE

JEROME A. WEIGEL
STATE OF WASHINGTON
14742
REGISTERED
PROFESSIONAL ENGINEER

EXPIRES JUNE 29, 2000

NOTE: THIS PLAN IS NOT A LEGAL ENGINEERING DOCUMENT BUT AN ELECTRONIC DUPLICATE. THE ORIGINAL, SIGNED BY THE ENGINEER AND APPROVED FOR PUBLICATION, IS KEPT ON FILE AT THE WASHINGTON STATE DEPARTMENT OF TRANSPORTATION. A COPY MAY BE OBTAINED UPON REQUEST.

REINFORCED CONCRETE RETAINING WALL TYPE 6 AND 6 SW STANDARD PLAN D-1f

SHEET 1 OF 2 SHEETS

APPROVED FOR PUBLICATION

Clifford E. Mansfield — DEPUTY STATE DESIGN ENGINEER — *10/06/99* DATE

WASHINGTON STATE DEPARTMENT OF TRANSPORTATION
OLYMPIA, WASHINGTON

DATE	REVISION	BY
10/99	Added note 5.	TWS

EFFECTIVE: APRIL 2, 2007 TO JANUARY 6, 2008

EFFECTIVE: APRIL 2, 2007 TO JANUARY 6, 2008

DIMENSIONS					FOOTING REINFORCEMENT																STEM REINFORCEMENT				MATERIAL QUANTITY		
					BAR E (size #4)		BAR F			BAR K						BAR M					BAR J			BAR G (size #4)			
H (ft)	B	C_v	D	h_k	LENGTH	h	SIZE	SPACING	LENGTH	SIZE	SPACING	LENGTH	h	b	SIZE	SPACING	LENGTH	h	b	SIZE	SPACING	LENGTH	LENGTH	CONCRETE (CY/LF)	STEEL (LBS/LF)	H (ft)
5	2'-6"	2'- 0"	1'-0"	0	3'- 5"	2'- 9"	#4	1'-0"	1'- 9"	#5	1'- 0"	5'-11"	4'- 7"	1'- 8"	N/A	N/A	N/A	N/A	N/A	N/A	N/A	N/A	3'-10"	0.233	19.253	5
6	2'-9"	2'- 0"	1'-0"	0	3'- 5"	2'- 9"	#4	1'-0"	2'- 0"	#5	1'- 0"	6'-11"	5'- 7"	1'- 8"	N/A	N/A	N/A	N/A	N/A	N/A	N/A	N/A	4'-10"	0.287	22.244	6
7	3'-0"	2'- 3"	1'-0"	0	3'- 5"	2'- 9"	#4	1'-0"	2'- 0"	#5	1'- 0"	8'- 1"	6'- 7"	1'-10"	N/A	N/A	N/A	N/A	N/A	N/A	N/A	N/A	5'-10"	0.349	23.906	7
8	3'-0"	2'- 3"	1'-0"	0	3'- 5"	2'- 9"	#4	1'-0"	2'- 0"	#5	1'- 0"	9'- 1"	7'- 7"	1'-10"	N/A	N/A	N/A	N/A	N/A	N/A	N/A	N/A	6'-10"	0.396	26.731	8
9	3'-6"	2'- 3"	1'-0"	0	3'- 5"	2'- 9"	#4	1'-0"	2'- 6"	#5	1'- 0"	10'- 1"	8'- 7"	1'-10"	N/A	N/A	N/A	N/A	N/A	N/A	N/A	N/A	7'-10"	0.470	29.889	9
10	3"-9"	2'- 9"	1'-0"	0	3'- 5"	2'- 9"	#4	1'-0"	2'- 3"	#5	1'- 0"	11'- 6"	9'- 7"	2'- 4"	N/A	N/A	N/A	N/A	N/A	N/A	N/A	N/A	8'-11"	0.539	31.682	10
11	4'-3"	3'- 0"	1'-0"	0	3'- 5"	2'- 9"	#4	1'-0"	2'- 6"	#5	1'- 0"	12'-11"	10'- 7"	2'- 8"	N/A	N/A	N/A	N/A	N/A	N/A	N/A	N/A	9'-11"	0.620	35.108	11
12	5'-0"	3'- 3"	1'-0"	0	3'- 5"	2'- 9"	#4	1'-0"	3'- 0"	#5	1'- 0"	14'- 1"	11'- 7"	2'-11"	N/A	N/A	N/A	N/A	N/A	N/A	N/A	N/A	10'-11"	0.715	39.108	12
13	5'-9"	3'- 6"	1'-0"	0	3'- 5"	2'- 9"	#4	9"	3'- 6"	#5	9"	15'- 4"	12'- 7"	3'- 1"	N/A	N/A	N/A	N/A	N/A	N/A	N/A	N/A	11'-11"	0.813	47.301	13
14	6'-3"	3'- 6"	1'-0"	0	3'- 5"	2'- 9"	#5	9"	4'- 4"	#5	9"	16'- 4"	13'- 7"	3'- 1"	N/A	N/A	N/A	N/A	N/A	N/A	N/A	N/A	12'-11"	0.906	53.382	14
15	7'-0"	3'- 9"	1'-0"	0	3'- 5"	2'- 9"	#6	8"	5'- 4"	#6	9"	17'- 6"	14'- 7"	3'- 4"	N/A	N/A	N/A	N/A	N/A	N/A	N/A	N/A	13'-11"	1.011	74.154	15
16	7'-6"	3'- 9"	1'-0"	0	3'- 5"	2'- 9"	#6	6"	5'-10"	#6	8"	18'- 6"	15'- 7"	3'- 4"	N/A	N/A	N/A	N/A	N/A	N/A	N/A	N/A	14'-11"	1.111	86.742	16
17	8'-0"	4'- 0"	1'-3"	0	3'- 8"	3'- 0"	#6	6"	6'- 1"	#6	7"	19'-10"	16'- 7"	3'- 8"	N/A	N/A	N/A	N/A	N/A	N/A	N/A	N/A	15'- 8"	1.267	99.328	17
18	8'-9"	4'- 3"	1'-3"	0	3'- 8"	3'- 0"	#6	5"	6'- 7"	#6	6"	21'- 0"	17'- 7"	3'-10"	N/A	N/A	N/A	N/A	N/A	N/A	N/A	N/A	16'- 8"	1.390	117.247	18
19	9'-0"	4'- 6"	1'-6"	0	3'-11"	3'- 3"	#7	7"	7'- 5"	#6	6"	22'- 3"	18'- 7"	4'- 1"	N/A	N/A	N/A	N/A	N/A	N/A	N/A	N/A	17'- 5"	1.553	125.039	19
20	9'-3"	4'- 9"	1'-6"	0	3'-11"	3'- 3"	#7	7"	7'- 5"	#7	7"	23'- 5"	19'- 7"	4'- 4"	N/A	N/A	N/A	N/A	N/A	N/A	N/A	N/A	18'- 5"	1.662	142.034	20
21	9'-9"	5'- 0"	1'-6"	0	3'-11"	3'- 3"	#7	6"	7'- 8"	#7	1'- 0"	12'- 8"	8'- 6"	4'- 8"	#7	1'- 0"	8'- 6"	4'- 4"	4'- 8"	#7	1'- 0"	19'- 4"	19'- 5"	1.788	149.230	21
22	10'-3"	5'- 3"	1'-9"	0	4'- 2"	3'- 6"	#7	6"	7'-11"	#7	11"	13'- 5"	9'- 1"	4'-10"	#7	11"	8'-11"	4'- 7"	4'-10"	#7	11"	20'- 1"	20'- 2"	1.986	160.101	22
23	10'-9"	5'- 6"	1'-9"	0	4'- 2"	3'- 6"	#7	6"	8'- 2"	#7	10"	14'- 0"	9'- 5"	5'- 1"	#7	1'-10"	9'- 2"	4'- 7"	5'- 1"	#7	10"	21'- 1"	21'- 2"	2.123	171.973	23
24	11'-3"	5'- 9"	2'-0"	0	4'- 5"	3'- 9"	#7	6"	8'- 5"	#7	10"	14'-10"	10'- 0"	5'- 4"	#7	1'-10"	9'- 8"	4'-10"	5'- 4"	#7	10"	21'-10"	21'-11"	2.341	181.868	24
25	11'-6"	6'- 3"	2'-0"	2'-0"	4'- 5"	3'- 9"	#7	6"	8'- 5"	#7	9"	15'- 8"	10'- 4"	5'-10"	#7	9"	10'- 2"	4'-10"	5'-10"	#7	9"	22'-10"	22'-11"	2.693	192.607	25
26	12'-0"	6'- 6"	2'-3"	2'-0"	4'- 8"	4'- 0"	#7	6"	8'- 5"	#7	9"	16'- 5"	10'-10"	6'- 1"	#7	9"	10'- 8"	5'- 1"	6'- 1"	#7	9"	23'- 7"	23'- 8"	2.927	202.605	26
27	12'-6"	7'- 0"	2'-3"	2'-0"	4'- 8"	4'- 0"	#7	6"	8'- 5"	#7	8"	17'- 5"	11'- 3"	6'- 8"	#7	8"	11'- 3"	5'- 1"	6'- 8"	#7	8"	24'- 7"	24'- 8"	3.086	213.332	27
28	13'-0"	7'- 3"	2'-6"	2'-0"	4'-11"	4'- 3"	#7	6"	8'- 8"	#8	9"	18'- 0"	11'- 9"	6'-10"	#8	9"	12'- 7"	6'- 4"	6'-10"	#8	9"	25'- 4"	25'- 6"	3.338	255.188	28
29	13'-6"	7'- 6"	2'-6"	2'-0"	4'-11"	4'- 3"	#8	6"	9'-11"	#8	8"	18'- 8"	12'- 2"	7'- 1"	#8	8"	12'-10"	6'- 4"	7'- 1"	#8	8"	26'- 4"	26'- 6"	3.509	299.649	29
30	14'-0"	8'- 0"	2'-9"	2'-0"	5'- 2"	4'- 6"	#8	6"	9'-11"	#8	8"	19'- 9"	12'- 8"	7'- 8"	#8	8"	13'- 8"	6'- 7"	7'- 8"	#8	8"	27'- 1"	27'- 3"	3.780	317.688	30
31	14'-6"	8'- 3"	2'-9"	2'-0"	5'- 2"	4'- 6"	#8	6"	10'- 2"	#8	8"	20'- 4"	13'- 1"	7'-10"	#8	8"	13'-10"	6'- 7"	7'-10"	#8	8"	28'- 1"	28'- 3"	3.962	326.716	31
32	15'-0"	8'- 6"	3'-0"	2'-0"	5'- 5"	4'- 9"	#8	6"	10'- 5"	#9	9"	21'- 0"	13'- 5"	8'- 1"	#9	9"	15'- 4"	7'-11"	8'- 1"	#9	9"	28'-11"	29'- 0"	4.252	393.547	32
33	15'-6"	8'- 9"	3'-0"	2'-0"	5'- 5"	4'- 9"	#8	6"	10'- 8"	#9	8"	21'- 8"	14'- 0"	8'- 4"	#9	8"	15'- 7"	7'-11"	8'- 4"	#9	8"	29'-11"	30'- 0"	4.444	424.671	33
34	16'-3"	9'- 3"	3'-3"	2'-0"	5'- 8"	5'- 0"	#8	6"	10'-11"	#9	8"	22'- 8"	14'- 6"	8'-10"	#9	8"	16'- 4"	8'- 2"	8'-10"	#9	8"	30'- 7"	30'- 9"	4.783	440.218	34
35	16'-9"	9'- 6"	3'-6"	2'-0"	5'-11"	5'- 3"	#8	5"	11'- 2"	#10	8"	23'- 4"	15'- 0"	9'- 1"	#10	8"	18'- 1"	9'- 9"	9'- 1"	#10	8"	31'- 4"	31'- 6"	5.106	544.207	35

EFFECTIVE: APRIL 2, 2007 TO JANUARY 6, 2008

WALL DESIGN WITH SLOPING
FRONT FACE AND 2:1 BACKSLOPE

JEROME A. WEIGEL
STATE OF WASHINGTON
14742
REGISTERED
PROFESSIONAL ENGINEER

EXPIRES JUNE 29, 2000

NOTE: THIS PLAN IS NOT A LEGAL ENGINEERING DOCUMENT BUT AN ELECTRONIC DUPLICATE. THE ORIGINAL, SIGNED BY THE ENGINEER AND APPROVED FOR PUBLICATION, IS KEPT ON FILE AT THE WASHINGTON STATE DEPARTMENT OF TRANSPORTATION. A COPY MAY BE OBTAINED UPON REQUEST.

REINFORCED CONCRETE RETAINING WALL TYPE 6 AND 6 SW STANDARD PLAN D-1f

SHEET 2 OF 2 SHEETS

APPROVED FOR PUBLICATION

Clifford E. Mansfield — DEPUTY STATE DESIGN ENGINEER — *10/06/99* DATE

WASHINGTON STATE DEPARTMENT OF TRANSPORTATION
OLYMPIA, WASHINGTON

DATE	REVISION	BY
10/99	New approval date.	TWS

EFFECTIVE: APRIL 2, 2007 TO JANUARY 6, 2008

EFFECTIVE: APRIL 2, 2007 TO JANUARY 6, 2008

DRAWN BY: ADAM COCHRAN

WALL HT H	TYPE 1A t	TYPE 1A DEPTH D1	TYPE 1A DEPTH D2	TYPE 1A BAR "D"	TYPE 1B t	TYPE 1B DEPTH D1	TYPE 1B DEPTH D2	TYPE 1B BAR "D"	TYPE 1C t	TYPE 1C DEPTH D1	TYPE 1C DEPTH D2	TYPE 1C BAR "D"	TYPE 1D t	TYPE 1D DEPTH D1	TYPE 1D DEPTH D2	TYPE 1D BAR "D"	WALL HT H
6' - 0"	5"	3' - 6"	3' - 3"	#3 @ 15"	5"	3' - 9"	3' - 6"	#3 @ 15"	5"	3' - 6"	3' - 3"	#3 @ 15"	5"	4' - 0"	3' - 6"	#3 @ 15"	6' - 0"
8' - 0"	5"	3' - 9"	3' - 3"	#3 @ 15"	5"	4' - 0"	3' - 9"	#3 @ 12"	5"	3' - 9"	3' - 6"	#3 @ 15"	5"	4' - 3"	3' - 9"	#3 @ 10"	8' - 0"
10' - 0"	5"	4' - 0"	3' - 6"	#3 @ 13"	5"	4' - 6"	4' - 0"	#4 @ 15"	5"	4' - 3"	3' - 9"	#3 @ 10"	5"	4' - 6"	4' - 0"	#4 @ 12"	10' - 0"
12' - 0"	5"	4' - 3"	3' - 9"	#3 @ 9"	5"	4' - 9"	4' - 3"	#4 @ 10"	5"	4' - 6"	4' - 0"	#4 @ 12"	5"	5' - 0"	4' - 6"	#4 @ 10"	12' - 0"
14' - 0"	5"	4' - 6"	4' - 0"	#4 @ 12"	5"	5' - 0"	4' - 6"	#4 @ 9"	5"	4' - 9"	4' - 3"	#4 @ 10"	5"	5' - 3"	4' - 9"	#5 @ 11"	14' - 0"
16' - 0"	5"	4' - 9"	4' - 3"	#4 @ 10"	5"	5' - 3"	4' - 9"	#5 @ 11"	5"	5' - 0"	4' - 6"	#4 @ 9"	5"	5' - 9"	5' - 0"	#5 @ 8"	16' - 0"
18' - 0"	5"	5' - 0"	4' - 6"	#4 @ 9"	5"	5' - 6"	5' - 0"	#5 @ 8"	5"	5' - 3"	4' - 9"	#5 @ 11"	5"	6' - 0"	5' - 3"	#6 @ 9"	18' - 0"
20' - 0"	5"	5' - 3"	4' - 9"	#4 @ 7"	5"	5' - 9"	5' - 3"	#5 @ 7"	5"	5' - 6"	5' - 0"	#5 @ 7"	6"	6' - 3"	5' - 6"	#6 @ 9"	20' - 0"
22' - 0"	5"	5' - 6"	5' - 0"	#4 @ 6"	6"	6' - 0"	5' - 6"	#5 @ 6"	5"	5' - 9"	5' - 3"	#5 @ 6"	6"	6' - 6"	5' - 9"	#6 @ 7"	22' - 0"
24' - 0"	5"	5' - 9"	5' - 3"	#5 @ 8"	6"	6' - 3"	5' - 9"	#6 @ 7"	6"	6' - 0"	5' - 6"	#6 @ 7"	7"	6' - 9"	6' - 0"	#6 @ 6"	24' - 0"

t = WALL THICKNESS

WIND EXPOSURE & VELOCITY		
NOISE BARRIER TYPE	WIND EXPOSURE	WIND VELOCITY (MPH)
1A	B1	80
1B	B1	90
1C	B2	80
1D	B2	90

SOIL TYPE	
SOIL TYPE	ANGLE OF INTERNAL FRICTION ϕ (DEGREES)
D1	32
D2	38

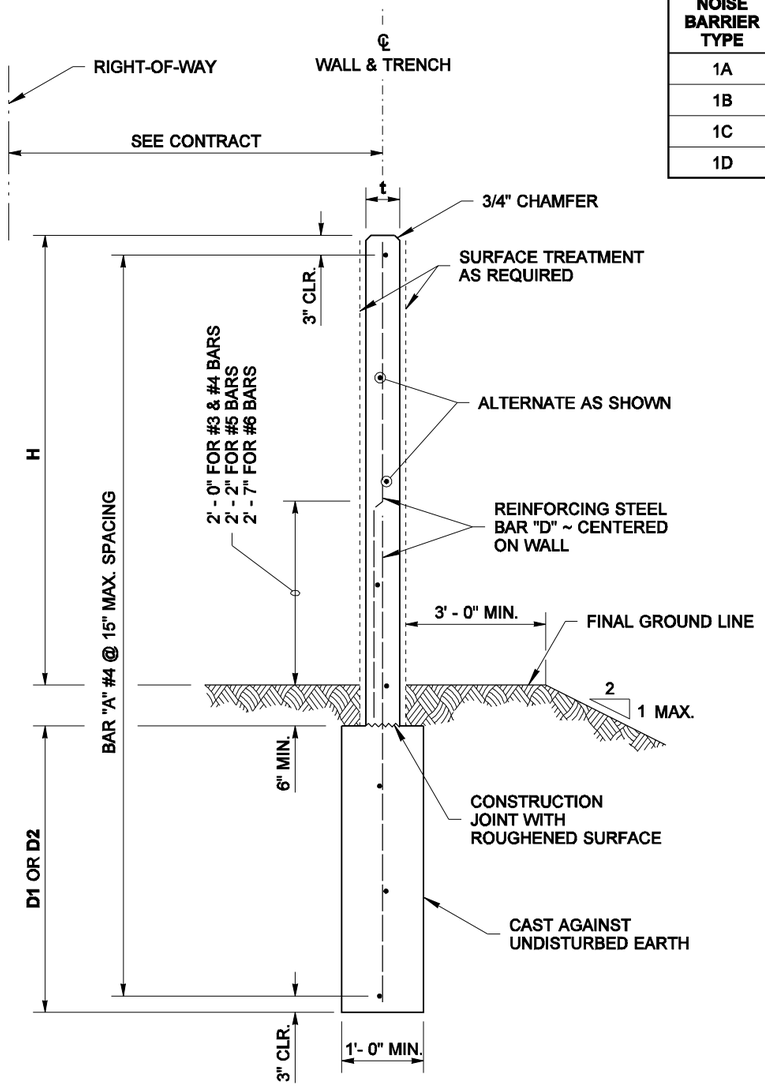

TYPICAL SECTION

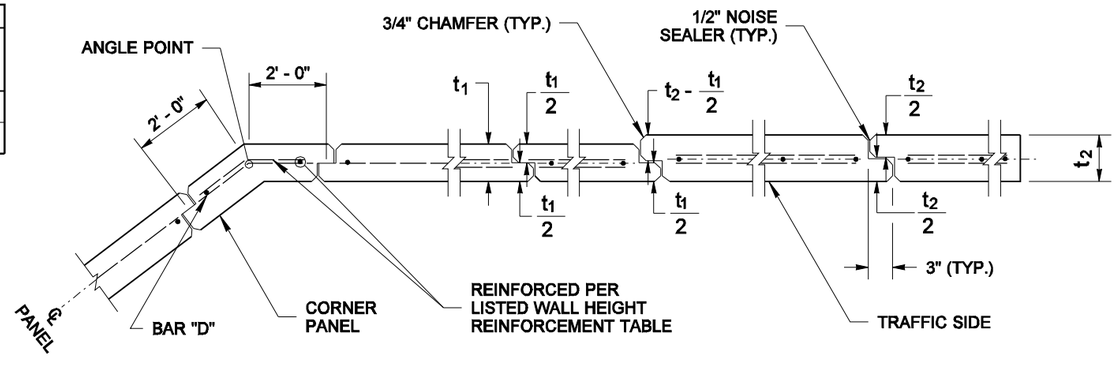

JOINT AND CORNER DETAIL

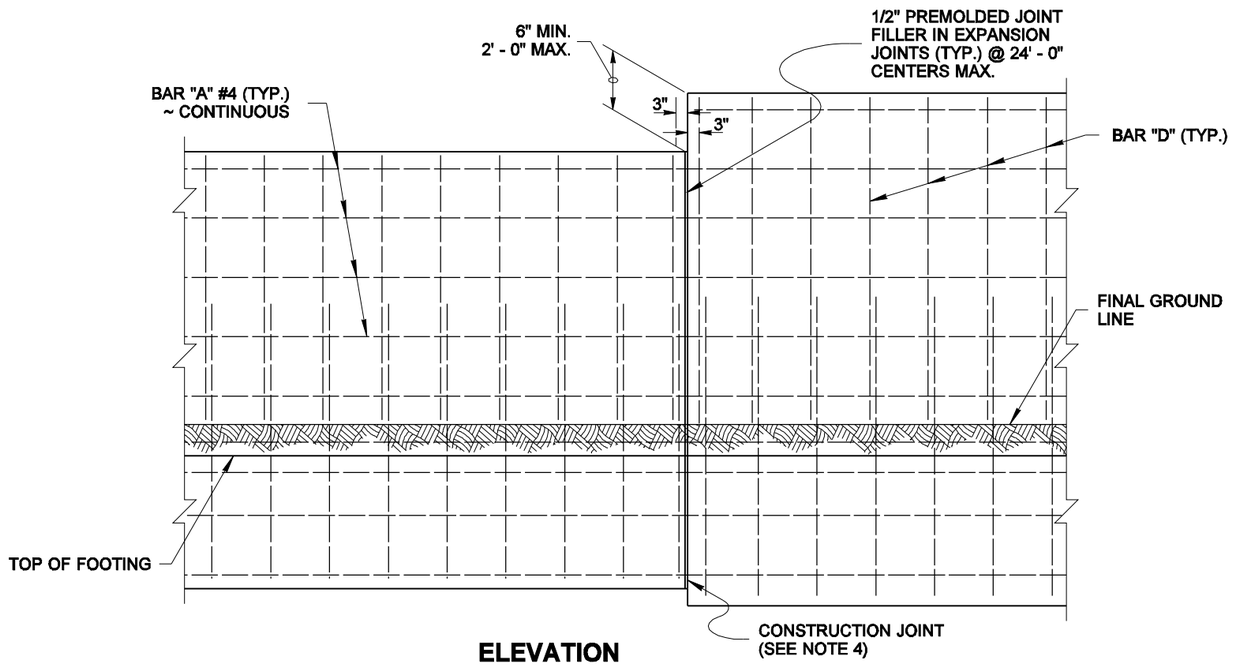

ELEVATION

NOTES

1. Wall to be designated Noise Barrier Wall Type 1A, 1B, 1C, or 1D. The Contract specifies actual wall designations.
2. For intermediate wall heights, use the next higher H.
3. Panels shall have at least 3 feet of level ground on each side.
4. Construction joints in the trench footing shall be spaced at 120 feet maximum.
5. The Contract specifies actual foundation requirements D1 or D2.

CAST-IN-PLACE CONCRETE WALL ON TRENCH FOOTING

BIJAN KHALEGHI STATE OF WASHINGTON 27695 REGISTERED PROFESSIONAL ENGINEER

EXPIRES AUGUST 23, 2006

NOTE: THIS PLAN IS NOT A LEGAL ENGINEERING DOCUMENT BUT AN ELECTRONIC DUPLICATE. THE ORIGINAL, SIGNED BY THE ENGINEER AND APPROVED FOR PUBLICATION, IS KEPT ON FILE AT THE WASHINGTON STATE DEPARTMENT OF TRANSPORTATION. A COPY MAY BE OBTAINED UPON REQUEST.

NOISE BARRIER WALL TYPE 1

STANDARD PLAN D-2.02-00

SHEET 1 OF 1 SHEET

APPROVED FOR PUBLICATION

Harold J. Peterfeso — STATE DESIGN ENGINEER — *11-10-05* — DATE

Washington State Department of Transportation

EFFECTIVE: APRIL 2, 2007 TO JANUARY 6, 2008

EFFECTIVE: APRIL 2, 2007 TO JANUARY 6, 2008
EFFECTIVE: APRIL 2, 2007 TO JANUARY 6, 2008

DRAWN BY: ADAM COCHRAN

WALL HT H	TYPE 2A W	t	BARS "A"&"F"	BAR "B"	BARS "D"&"E"	TYPE 2B W	t	BARS "A"&"F"	BAR "B"	BARS "D"&"E"	TYPE 2C W	t	BARS "A"&"F"	BAR "B"	BARS "D"&"E"	TYPE 2D W	t	BARS "A"&"F"	BAR "B"	BARS "D"&"E"	WALL HT H
6' - 0"	2' - 0"	5"	3 ~ #4	#4 @ 18"	#3 @ 15"	2' - 3"	5"	3 ~ #4	#4 @ 18"	#3 @ 12"	2' - 0"	5"	3 ~ #4	#4 @ 18"	#3 @ 15"	2' - 6"	5"	3 ~ #4	#4 @ 18"	#3 @ 11"	6' - 0"
8' - 0"	2' - 3"	5"	3 ~ #4	#4 @ 18"	#3 @ 12"	2' - 9"	5"	3 ~ #4	#4 @ 18"	#4 @ 15"	2' - 6"	5"	3 ~ #4	#4 @ 18"	#3 @ 10"	3' - 3"	5"	5 ~ #4	#4 @ 18"	#4 @ 12"	8' - 0"
10' - 0"	2' - 6"	5"	3 ~ #4	#4 @ 18"	#3 @ 9"	3' - 3"	5"	5 ~ #4	#4 @ 18"	#4 @ 10"	2' - 9"	5"	3 ~ #4	#4 @ 18"	#4 @ 12"	3' - 6"	5"	5 ~ #4	#4 @ 18"	#4 @ 10"	10' - 0"
12' - 0"	3' - 0"	5"	3 ~ #4	#4 @ 18"	#4 @ 12"	3' - 9"	5"	5 ~ #4	#4 @ 18"	#4 @ 10"	3' - 3"	5"	3 ~ #4	#4 @ 18"	#4 @ 10"	4' - 3"	5"	5 ~ #4	#4 @ 18"	#5 @ 12"	12' - 0"
14' - 0"	3' - 3"	5"	3 ~ #4	#4 @ 18"	#4 @ 10"	4' - 3"	5"	5 ~ #4	#4 @ 18"	#5 @ 11"	3' - 9"	5"	3 ~ #4	#4 @ 18"	#4 @ 9"	4' - 9"	5"	5 ~ #4	#4 @ 18"	#5 @ 8"	14' - 0"
16' - 0"	3' - 9"	5"	5 ~ #4	#4 @ 18"	#4 @ 9"	4' - 9"	5"	5 ~ #4	#4 @ 18"	#6 @ 12"	4' - 3"	5"	5 ~ #4	#4 @ 18"	#5 @ 11"	5' - 6"	5"	5 ~ #4	#4 @ 18"	#6 @ 9"	16' - 0"
18' - 0"	4' - 0"	5"	5 ~ #4	#4 @ 18"	#5 @ 11"	5' - 3"	5"	5 ~ #4	#4 @ 18"	#6 @ 9"	4' - 6"	5"	5 ~ #4	#4 @ 18"	#6 @ 12"	6' - 0"	6"	5 ~ #4	#4 @ 18"	#6 @ 9"	18' - 0"
20' - 0"	5' - 0"	5"	5 ~ #4	#4 @ 18"	#5 @ 9"	6' - 0"	6"	5 ~ #4	#4 @ 18"	#6 @ 9"	5' - 3"	5"	5 ~ #4	#4 @ 18"	#6 @ 10"	6' - 6"	6"	5 ~ #4	#4 @ 12"	#6 @ 7 1/4"	20' - 0"
22' - 0"	5' - 6"	5"	5 ~ #4	#4 @ 18"	#5 @ 7"	6' - 3"	6"	5 ~ #4	#4 @ 12"	#6 @ 8"	5' - 9"	6"	5 ~ #4	#4 @ 18"	#6 @ 9"	7' - 0"	7"	5 ~ #4	#4 @ 11"	#6 @ 7"	22' - 0"
24' - 0"	6' - 0"	5"	5 ~ #4	#4 @ 15"	#5 @ 6"	6' - 9"	7"	5 ~ #4	#4 @ 11"	#6 @ 8"	6' - 3"	6"	5 ~ #4	#4 @ 12"	#6 @ 8"	7' - 6"	7"	5 ~ #4	#4 @ 9"	#6 @ 6 1/4"	24' - 0"

t = WALL THICKNESS

NOTES

1. Wall to be designated Noise Barrier Wall Type 2A, 2B, 2C or 2D. The Contract specifies actual wall designations.
2. For intermediate wall heights not listed, use the next higher H.
3. Panels shall have at least 3 feet of level ground on each side.
4. Construction joints in the footing shall be spaced at 120 feet maximum.

WIND EXPOSURE & VELOCITY		
NOISE BARRIER TYPE	WIND EXPOSURE	WIND VELOCITY (MPH)
2A	B1	80
2B	B1	90
2C	B2	80
2D	B2	90

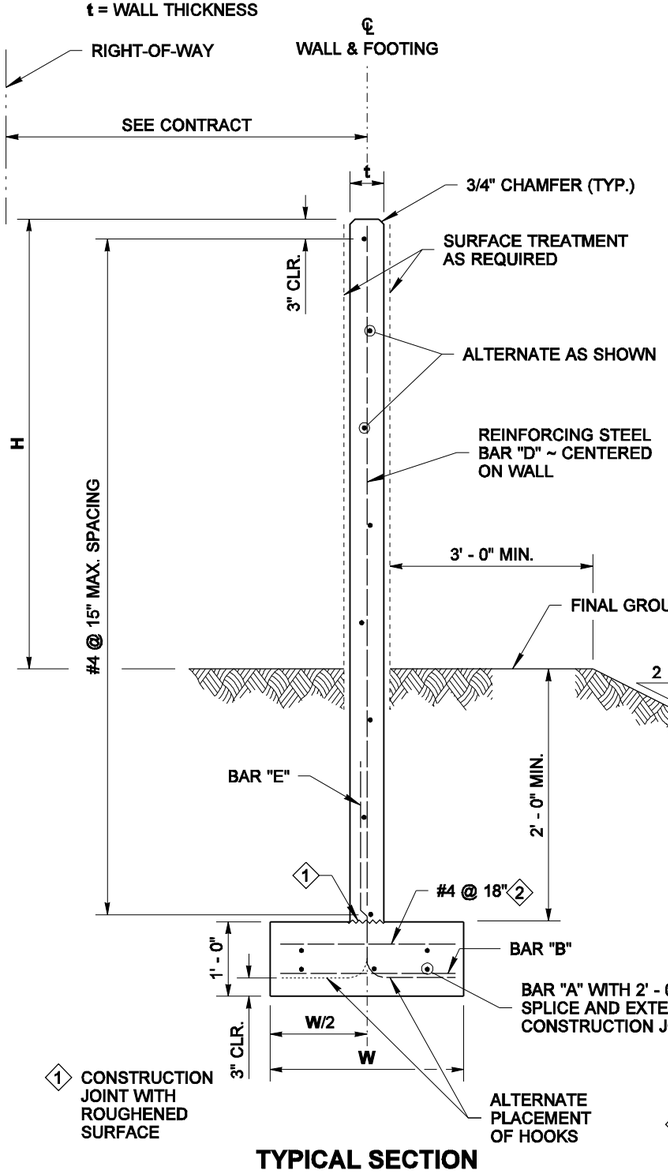

TYPICAL SECTION

2 REQUIRED FOR WALLS 24' - 0" ~ TYPE 2C, WALL HEIGHT 22' - 0" & 24' - 0" ~ TYPE 2B & WALLS 20' - 0", 22' - 0" & 24' - 0" ~ TYPE 2D

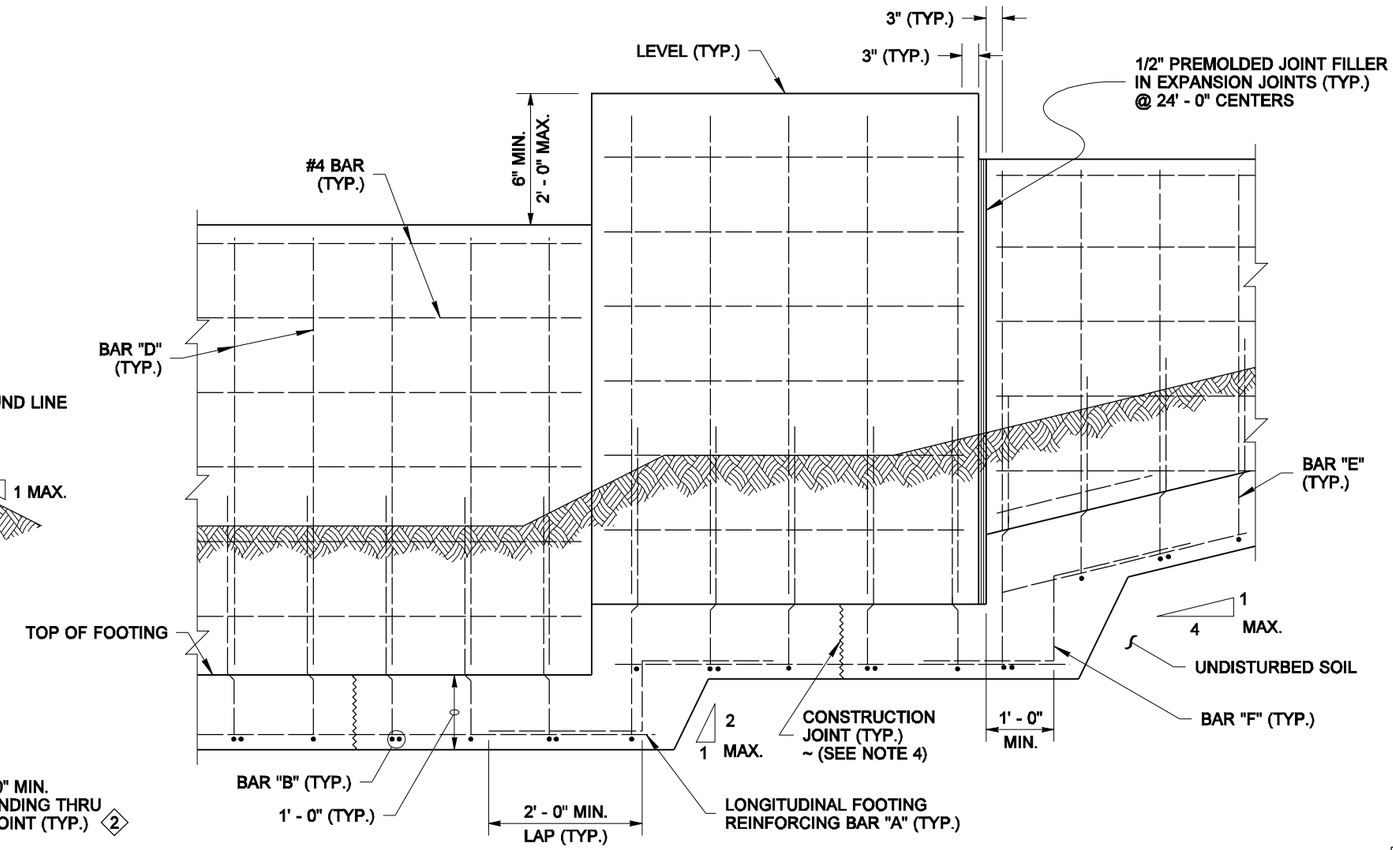

ELEVATION

CAST-IN-PLACE CONCRETE WALL ON SPREAD FOOTING

BIJAN KHALEGHI
STATE OF WASHINGTON
27695
REGISTERED
PROFESSIONAL ENGINEER

EXPIRES AUGUST 23, 2006

NOTE: THIS PLAN IS NOT A LEGAL ENGINEERING DOCUMENT BUT AN ELECTRONIC DUPLICATE. THE ORIGINAL, SIGNED BY THE ENGINEER AND APPROVED FOR PUBLICATION, IS KEPT ON FILE AT THE WASHINGTON STATE DEPARTMENT OF TRANSPORTATION. A COPY MAY BE OBTAINED UPON REQUEST.

NOISE BARRIER WALL TYPE 2

STANDARD PLAN D-2.04-00

SHEET 1 OF 2 SHEETS

APPROVED FOR PUBLICATION

Harold J. Peterfeso — STATE DESIGN ENGINEER
11-10-05 — DATE

Washington State Department of Transportation

EFFECTIVE: APRIL 2, 2007 TO JANUARY 6, 2008
EFFECTIVE: APRIL 2, 2007 TO JANUARY 6, 2008

EFFECTIVE: APRIL 2, 2007 TO JANUARY 6, 2008
EFFECTIVE: APRIL 2, 2007 TO JANUARY 6, 2008

DRAWN BY: ADAM COCHRAN

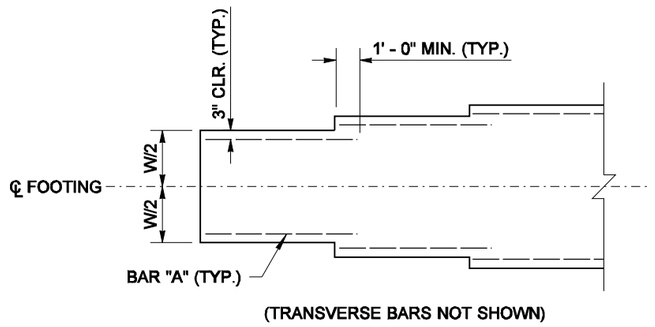

(TRANSVERSE BARS NOT SHOWN)

FOOTING WIDTH TRANSITION DETAIL
FOR LOCATIONS WITHOUT FOOTING STEP

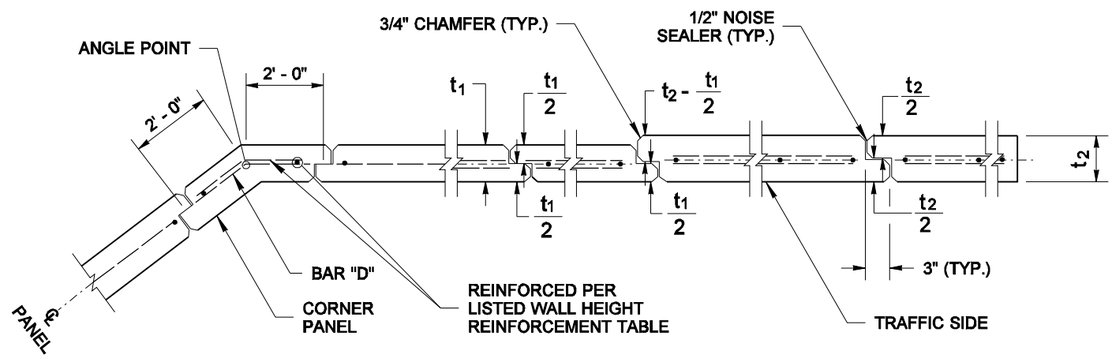

JOINT AND CORNER DETAIL

CAST-IN-PLACE CONCRETE WALL ON SPREAD FOOTING

BIJAN KHALEGHI
STATE OF WASHINGTON
27695
REGISTERED
PROFESSIONAL ENGINEER
EXPIRES AUGUST 23, 2006

NOTE: THIS PLAN IS NOT A LEGAL ENGINEERING DOCUMENT BUT AN ELECTRONIC DUPLICATE. THE ORIGINAL, SIGNED BY THE ENGINEER AND APPROVED FOR PUBLICATION, IS KEPT ON FILE AT THE WASHINGTON STATE DEPARTMENT OF TRANSPORTATION. A COPY MAY BE OBTAINED UPON REQUEST.

NOISE BARRIER WALL TYPE 2

STANDARD PLAN D-2.04-00

SHEET 2 OF 2 SHEETS

APPROVED FOR PUBLICATION

Harold J. Peterfeso — STATE DESIGN ENGINEER — *11-10-05* — DATE

Washington State Department of Transportation

EFFECTIVE: APRIL 2, 2007 TO JANUARY 6, 2008
EFFECTIVE: APRIL 2, 2007 TO JANUARY 6, 2008

EFFECTIVE: APRIL 2, 2007 TO JANUARY 6, 2008
EFFECTIVE: APRIL 2, 2007 TO JANUARY 6, 2008

DRAWN BY: ADAM COCHRAN

WALL HT H	TYPE 3A					TYPE 3B					TYPE 3C					TYPE 3D					WALL HT H
	W	t	BARS "A"&"F"	BAR "B"	BARS "D"&"E"	W	t	BARS "A"&"F"	BAR "B"	BARS "D"&"E"	W	t	BARS "A"&"F"	BAR "B"	BARS "D"&"E"	W	t	BARS "A"&"F"	BAR "B"	BARS "D"&"E"	
6' - 0"	2' - 0"	5"	3 ~ #4	#4 @ 18"	#3 @ 15"	2' - 3"	5"	3 ~ #4	#4 @ 18"	#3 @ 12"	2' - 0"	5"	3 ~ #4	#4 @ 18"	#3 @ 15"	2' - 6"	5"	3 ~ #4	#4 @ 18"	#3 @ 11"	6' - 0"
8' - 0"	2' - 3"	5"	3 ~ #4	#4 @ 18"	#3 @ 12"	2' - 9"	5"	3 ~ #4	#4 @ 18"	#4 @ 15"	2' - 6"	5"	3 ~ #4	#4 @ 18"	#3 @ 10"	3' - 3"	5"	5 ~ #4	#4 @ 18"	#4 @ 12"	8' - 0"
10' - 0"	2' - 6"	5"	3 ~ #4	#4 @ 18"	#3 @ 9"	3' - 3"	5"	5 ~ #4	#4 @ 18"	#4 @ 10"	2' - 9"	5"	3 ~ #4	#4 @ 18"	#4 @ 12"	3' - 6"	5"	5 ~ #4	#4 @ 18"	#4 @ 10"	10' - 0"
12' - 0"	3' - 0"	5"	3 ~ #4	#4 @ 18"	#4 @ 12"	3' - 9"	5"	5 ~ #4	#4 @ 18"	#4 @ 10"	3' - 3"	5"	3 ~ #4	#4 @ 18"	#4 @ 10"	4' - 3"	5"	5 ~ #4	#4 @ 18"	#5 @ 12"	12' - 0"
14' - 0"	3' - 3"	5"	3 ~ #4	#4 @ 18"	#4 @ 10"	4' - 3"	5"	5 ~ #4	#4 @ 18"	#5 @ 11"	3' - 9"	5"	5 ~ #4	#4 @ 18"	#4 @ 9"	5' - 3"	5"	5 ~ #4	#4 @ 18"	#5 @ 8"	14' - 0"
16' - 0"	3' - 9"	5"	5 ~ #4	#4 @ 18"	#4 @ 9"	5' - 3"	5"	5 ~ #4	#4 @ 18"	#6 @ 12"	4' - 3"	5"	5 ~ #4	#4 @ 18"	#5 @ 11"	6' - 3"	5"	5 ~ #4	#4 @ 18"	#6 @ 9"	16' - 0"
18' - 0"	4' - 0"	5"	5 ~ #4	#4 @ 18"	#5 @ 11"	6' - 0"	5"	5 ~ #4	#4 @ 18"	#6 @ 9"	5' - 0"	5"	5 ~ #4	#4 @ 18"	#6 @ 12"	7' - 0"	6"	5 ~ #4	#4 @ 18"	#6 @ 9"	18' - 0"
20' - 0"	5' - 0"	5"	5 ~ #4	#4 @ 18"	#6 @ 12"	7' - 0"	6"	5 ~ #4	#4 @ 18"	#6 @ 9"	5' - 9"	5"	5 ~ #4	#4 @ 18"	#6 @ 9"	8' - 0"	6"	6 ~ #4	#4 @ 12"	#6 @ 6"	20' - 0"
22' - 0"	5' - 6"	5"	5 ~ #4	#4 @ 18"	#6 @ 9"	7' - 9"	6"	6 ~ #4	#4 @ 12"	#6 @ 6"	6' - 6"	6"	5 ~ #4	#4 @ 18"	#6 @ 9"	9' - 0"	7"	7 ~ #4	#4 @ 12"	#6 @ 6"	22' - 0"
24' - 0"	6' - 3"	5"	5 ~ #4	#4 @ 18"	#6 @ 9"	8' - 6"	7"	6 ~ #4	#4 @ 12"	#6 @ 6"	7' - 6"	6"	6 ~ #4	#4 @ 12"	#6 @ 6"	9' - 9"	7"	7 ~ #4	#4 @ 15"	#6 @ 6"	24' - 0"

t = WALL THICKNESS

NOTES

1. Wall to be designated Noise Barrier Wall Type 3A, 3B, 3C or 3D. The Contract specifies actual wall designations.
2. For intermediate wall heights not listed, use the next higher H.
3. Panels shall have at least 3 feet of level ground on each side.
4. Construction joints in the footing shall be spaced at 120 feet maximum.

WIND EXPOSURE & VELOCITY		
NOISE BARRIER TYPE	WIND EXPOSURE	WIND VELOCITY (MPH)
3A	B1	80
3B	B1	90
3C	B2	80
3D	B2	90

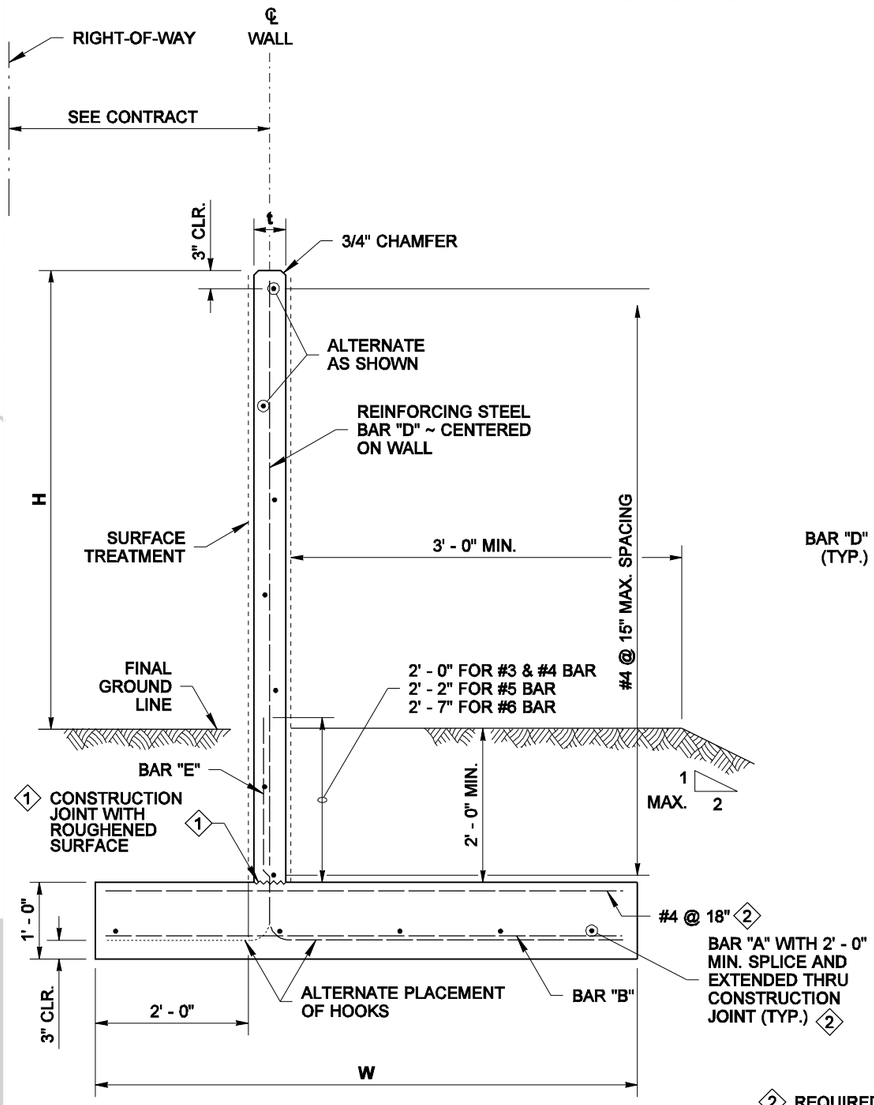

TYPICAL SECTION

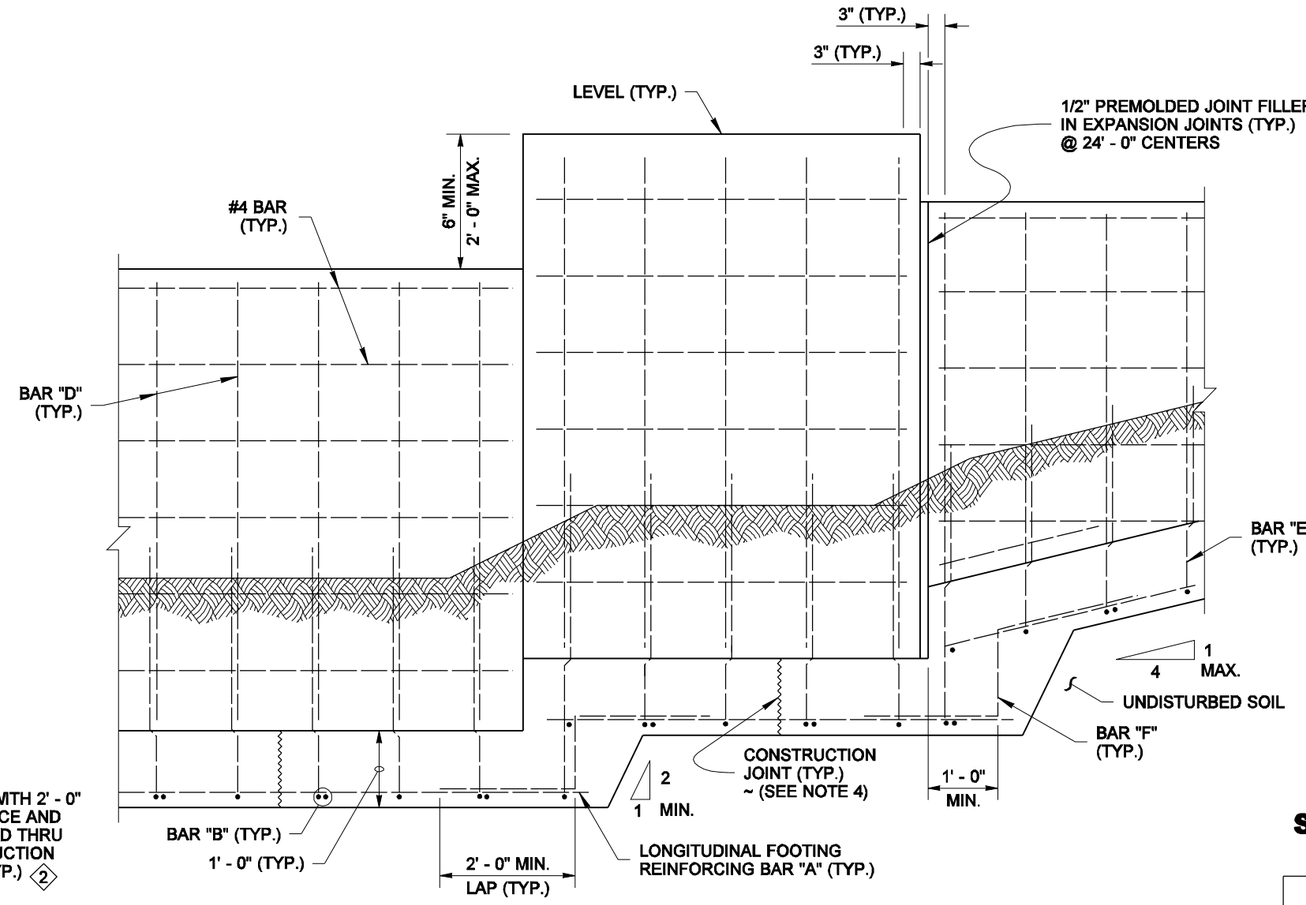

ELEVATION

2 REQUIRED FOR WALLS 24' - 0" ~ TYPE 3C, WALL HEIGHT 22' - 0" & 24' - 0" ~ TYPE 3B, & WALLS 20' - 0", 22' - 0" & 24' - 0" ~ TYPE 3D

CAST-IN-PLACE CONCRETE WALL ON OFFSET SPREAD FOOTING

BIJAN KHALEGHI
STATE OF WASHINGTON
27695
REGISTERED
PROFESSIONAL ENGINEER
EXPIRES AUGUST 23, 2006

NOTE: THIS PLAN IS NOT A LEGAL ENGINEERING DOCUMENT BUT AN ELECTRONIC DUPLICATE. THE ORIGINAL, SIGNED BY THE ENGINEER AND APPROVED FOR PUBLICATION, IS KEPT ON FILE AT THE WASHINGTON STATE DEPARTMENT OF TRANSPORTATION. A COPY MAY BE OBTAINED UPON REQUEST.

NOISE BARRIER WALL TYPE 3

STANDARD PLAN D-2.06-00

SHEET 1 OF 2 SHEETS

APPROVED FOR PUBLICATION

Harold J. Peterfeso — STATE DESIGN ENGINEER
11-10-05 — DATE

Washington State Department of Transportation

EFFECTIVE: APRIL 2, 2007 TO JANUARY 6, 2008
EFFECTIVE: APRIL 2, 2007 TO JANUARY 6, 2008

EFFECTIVE: APRIL 2, 2007 TO JANUARY 6, 2008
EFFECTIVE: APRIL 2, 2007 TO JANUARY 6, 2008

DRAWN BY: ADAM COCHRAN

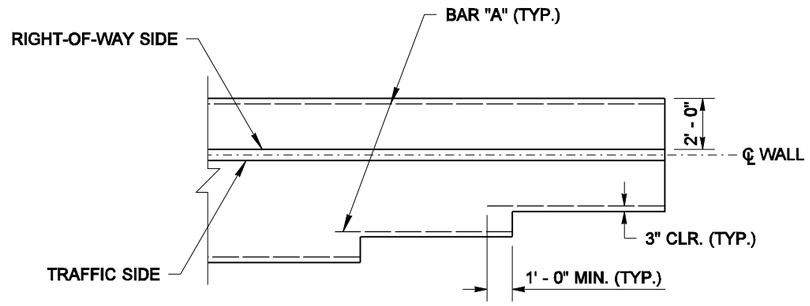

(TRANSVERSE BARS NOT SHOWN)

FOOTING WIDTH TRANSITION DETAIL
FOR LOCATIONS WITHOUT FOOTING STEP

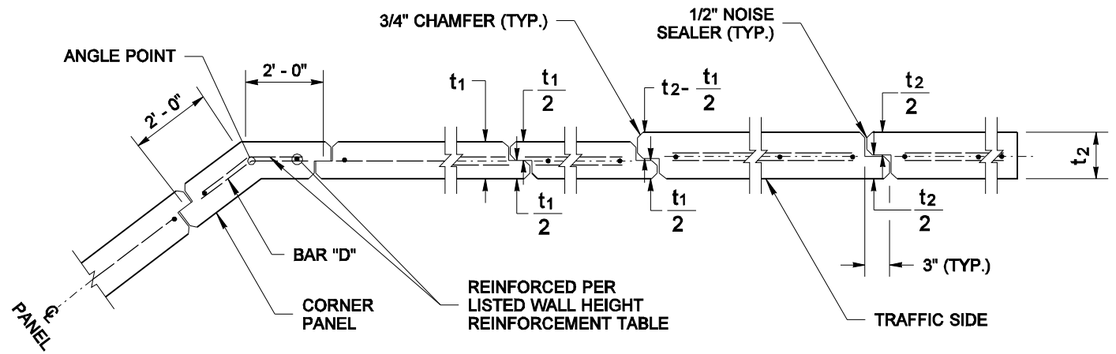

JOINT AND CORNER DETAIL

CAST-IN-PLACE CONCRETE WALL ON OFFSET SPREAD FOOTING

BIJAN KHALEGHI
STATE OF WASHINGTON
27695
REGISTERED
PROFESSIONAL ENGINEER
EXPIRES AUGUST 23, 2006

NOTE: THIS PLAN IS NOT A LEGAL ENGINEERING DOCUMENT BUT AN ELECTRONIC DUPLICATE. THE ORIGINAL, SIGNED BY THE ENGINEER AND APPROVED FOR PUBLICATION, IS KEPT ON FILE AT THE WASHINGTON STATE DEPARTMENT OF TRANSPORTATION. A COPY MAY BE OBTAINED UPON REQUEST.

NOISE BARRIER WALL TYPE 3

STANDARD PLAN D-2.06-00

SHEET 2 OF 2 SHEETS

APPROVED FOR PUBLICATION

Harold J. Peterfeso — STATE DESIGN ENGINEER
11-10-05 — DATE

Washington State Department of Transportation

EFFECTIVE: APRIL 2, 2007 TO JANUARY 6, 2008
EFFECTIVE: APRIL 2, 2007 TO JANUARY 6, 2008

EFFECTIVE: APRIL 2, 2007 TO JANUARY 6, 2008

DRAWN BY: ADAM COCHRAN

WALL HT H	TYPE 4A t	SHAFT DIAM. D	DEPTH D1	DEPTH D2	SHAFT REINF. BAR"P"	BARS "C"&"D"	TYPE 4B t	SHAFT DIAM. D	DEPTH D1	DEPTH D2	SHAFT REINF. BAR"P"	BARS "C"&"D"	TYPE 4C t	SHAFT DIAM. D	DEPTH D1	DEPTH D2	SHAFT REINF. BAR"P"	BARS "C"&"D"	TYPE 4D t	SHAFT DIAM. D	DEPTH D1	DEPTH D2	SHAFT REINF. BAR"P"	BARS "C"&"D"	WALL HT H
6' - 0"	5"	12"	5' - 3"	4' - 9"	6 ~ #5	#3 @ 15"	5"	12"	6' - 0"	5' - 3"	6 ~ #5	#3 @ 15"	5"	12"	5' - 9"	5' - 0"	6 ~ #5	#3 @ 15"	5"	12"	6' - 6"	5' - 9"	6 ~ #5	#3 @ 15"	6' - 0"
8' - 0"	5"	12"	6' - 0"	5' - 3"	6 ~ #5	#3 @ 15"	5"	12"	7' - 0"	6' - 0"	6 ~ #5	#3 @ 12"	5"	12"	6' - 6"	5' - 6"	6 ~ #5	#3 @ 15"	5"	12"	7' - 6"	6' - 6"	6 ~ #6	#3 @ 10"	8' - 0"
10' - 0"	5"	12"	6' - 9"	5' - 9"	6 ~ #5	#3 @ 13"	5"	12"	7' - 9"	6' - 9"	6 ~ #6	#4 @ 15"	5"	12"	7' - 3"	6' - 3"	6 ~ #5	#3 @ 10"	5"	12"	8' - 3"	7' - 0"	6 ~ #7	#4 @ 12"	10' - 0"
12' - 0"	5"	12"	7' - 3"	6' - 3"	6 ~ #5	#3 @ 9"	5"	12"	8' - 6"	7' - 3"	6 ~ #7	#4 @ 10"	5"	12"	7' - 9"	6' - 9"	6 ~ #6	#4 @ 12"	5"	14"	8' - 6"	7' - 3"	8 ~ #7	#4 @ 10"	12' - 0"
14' - 0"	5"	12"	7' - 9"	6' - 9"	6 ~ #6	#4 @ 12"	5"	14"	8' - 6"	7' - 3"	8 ~ #7	#4 @ 9"	5"	12"	8' - 6"	7' - 3"	6 ~ #7	#4 @ 10"	5"	14"	9' - 3"	8' - 0"	8 ~ #7	#5 @ 11"	14' - 0"
16' - 0"	5"	12"	8' - 6"	7' - 3"	6 ~ #7	#4 @ 10"	5"	16"	9' - 3"	8' - 0"	8 ~ #7	#5 @ 11"	5"	14"	8' - 6"	7' - 3"	8 ~ #6	#4 @ 9"	5"	16"	9' - 6"	8' - 0"	8 ~ #8	#5 @ 8"	16' - 0"
18' - 0"	5"	12"	9' - 0"	7' - 9"	6 ~ #8	#4 @ 9"	5"	16"	9' - 3"	8' - 0"	6 ~ #8	#5 @ 8"	5"	14"	9' - 0"	7' - 9"	8 ~ #7	#5 @ 11"	5"	16"	10' - 0"	8' - 6"	8 ~ #8	#6 @ 9"	18' - 0"
20' - 0"	5"	12"	9' - 3"	7' - 9"	6 ~ #9	#4 @ 7"	5"	16"	10' - 0"	8' - 6"	8 ~ #7	#5 @ 7"	5"	14"	9' - 9"	8' - 3"	8 ~ #8	#5 @ 8"	6"	16"	10' - 9"	9' - 3"	8 ~ #9	#6 @ 9"	20' - 0"
22' - 0"	5"	14"	9' - 3"	7' - 9"	8 ~ #7	#4 @ 6"	6"	16"	10' - 6"	9' - 0"	8 ~ #8	#5 @ 6"	5"	14"	10' - 3"	8' - 9"	8 ~ #9	#5 @ 8"	6"	16"	11' - 6"	9' - 9"	8 ~ #10	#6 @ 7"	22' - 0"
24' - 0"	5"	14"	9' - 9"	8' - 3"	8 ~ #8	#5 @ 8"	6"	16"	11' - 3"	9' - 6"	8 ~ #8	#6 @ 7"	6"	16"	10' - 3"	8' - 9"	8 ~ #8	#6 @ 7"	7"	18"	11' - 6"	9' - 9"	8 ~ #10	#6 @ 7"	24' - 0"

t = WALL THICKNESS

WIND EXPOSURE & VELOCITY		
NOISE BARRIER TYPE	WIND EXPOSURE	WIND VELOCITY (MPH)
4A	B1	80
4B	B1	90
4C	B2	80
4D	B2	90

SOIL TYPE	
SOIL TYPE	ANGLE OF INTERNAL FRICTION ϕ (DEGREES)
D1	32
D2	38

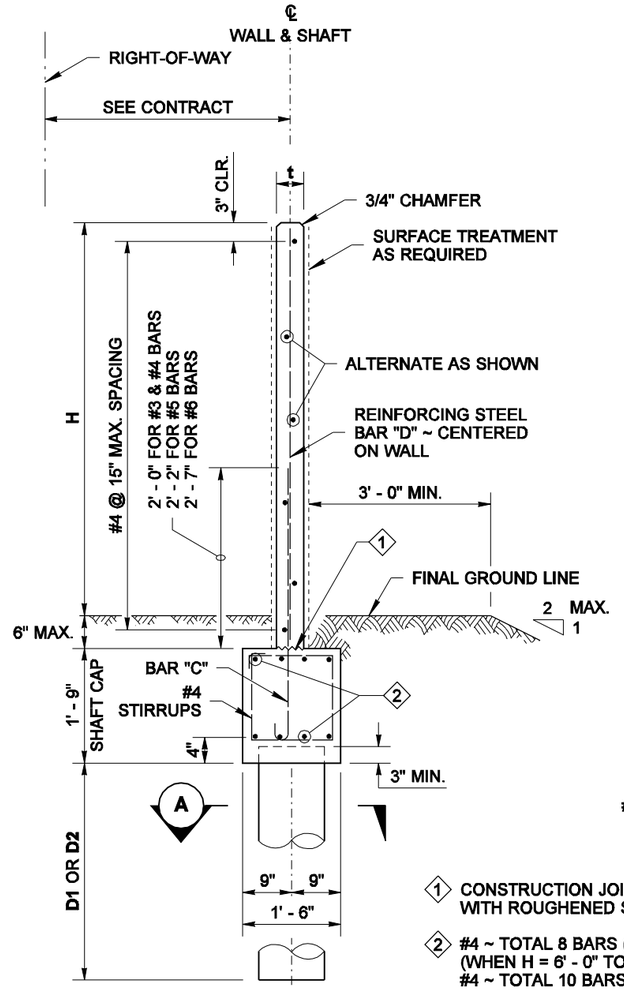

TYPICAL SECTION

1 CONSTRUCTION JOINT WITH ROUGHENED SURFACE

2 #4 ~ TOTAL 8 BARS (TYP.) (WHEN H = 6' - 0" TO 12' - 0") #4 ~ TOTAL 10 BARS (WHEN H = 14' - 0" TO 24' - 0") WITH 2' - 0" MIN. LAP SPLICE

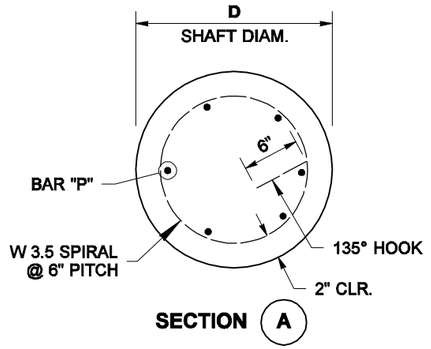

SECTION (A)

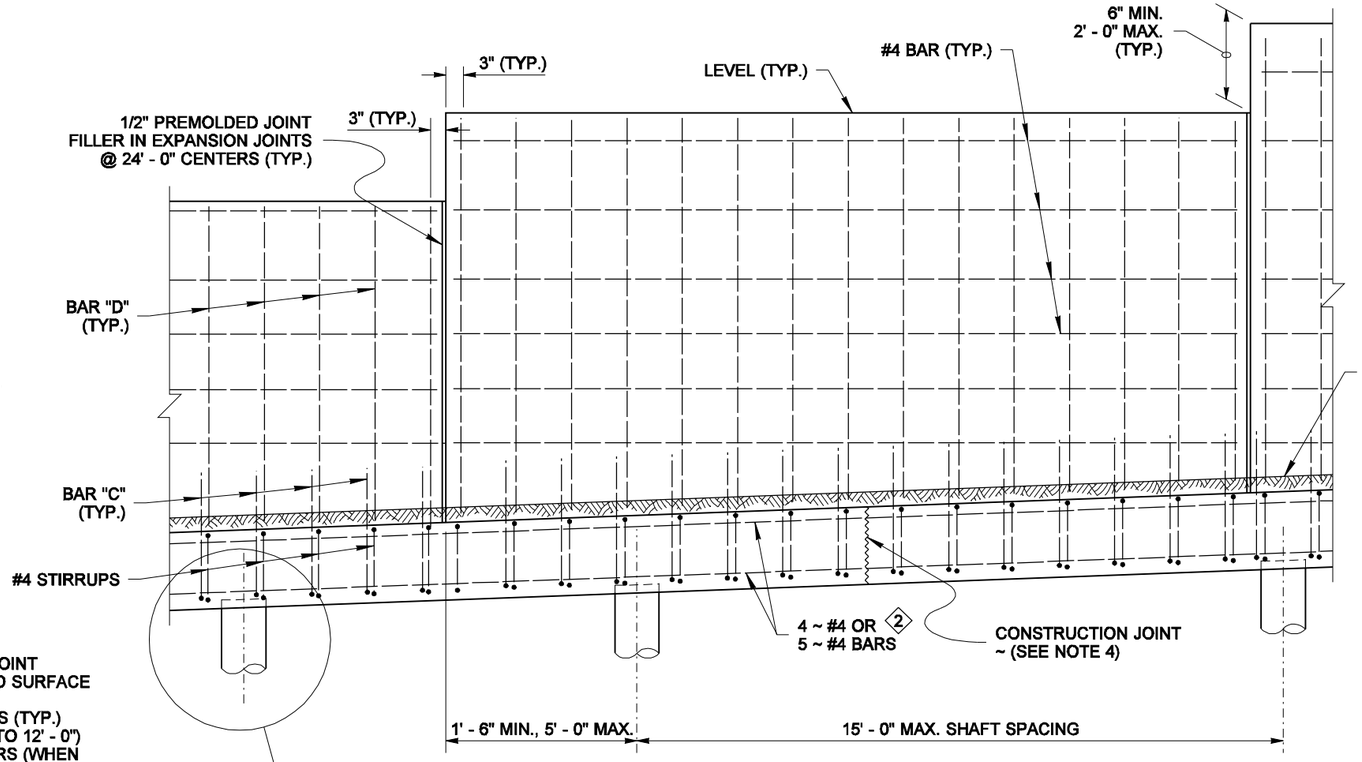

ELEVATION

NOTES

1. Wall to be designated Noise Barrier Wall Type 4A, 4B, 4C or 4D. The Contract specifies actual wall designations.
2. For intermediate wall heights, see next higher H.
3. Panels shall have at least 3 feet of level ground on each side.
4. Construction joints in the shaft cap shall be spaced at 120 feet maximum.
5. The Contract specifies actual foundation requirements D1 or D2.

CAST-IN-PLACE CONCRETE WALL ON SHAFT FOUNDATION

BIJAN KHALEGHI
STATE OF WASHINGTON
27695
REGISTERED
PROFESSIONAL ENGINEER

EXPIRES AUGUST 23, 2006

NOTE: THIS PLAN IS NOT A LEGAL ENGINEERING DOCUMENT BUT AN ELECTRONIC DUPLICATE. THE ORIGINAL, SIGNED BY THE ENGINEER AND APPROVED FOR PUBLICATION, IS KEPT ON FILE AT THE WASHINGTON STATE DEPARTMENT OF TRANSPORTATION. A COPY MAY BE OBTAINED UPON REQUEST.

NOISE BARRIER WALL TYPE 4

STANDARD PLAN D-2.08-00

SHEET 1 OF 2 SHEETS

APPROVED FOR PUBLICATION

Harold J. Peterfeso — STATE DESIGN ENGINEER
11-10-05 — DATE

Washington State Department of Transportation

EFFECTIVE: APRIL 2, 2007 TO JANUARY 6, 2008

EFFECTIVE: APRIL 2, 2007 TO JANUARY 6, 2008
EFFECTIVE: APRIL 2, 2007 TO JANUARY 6, 2008

DRAWN BY: ADAM COCHRAN

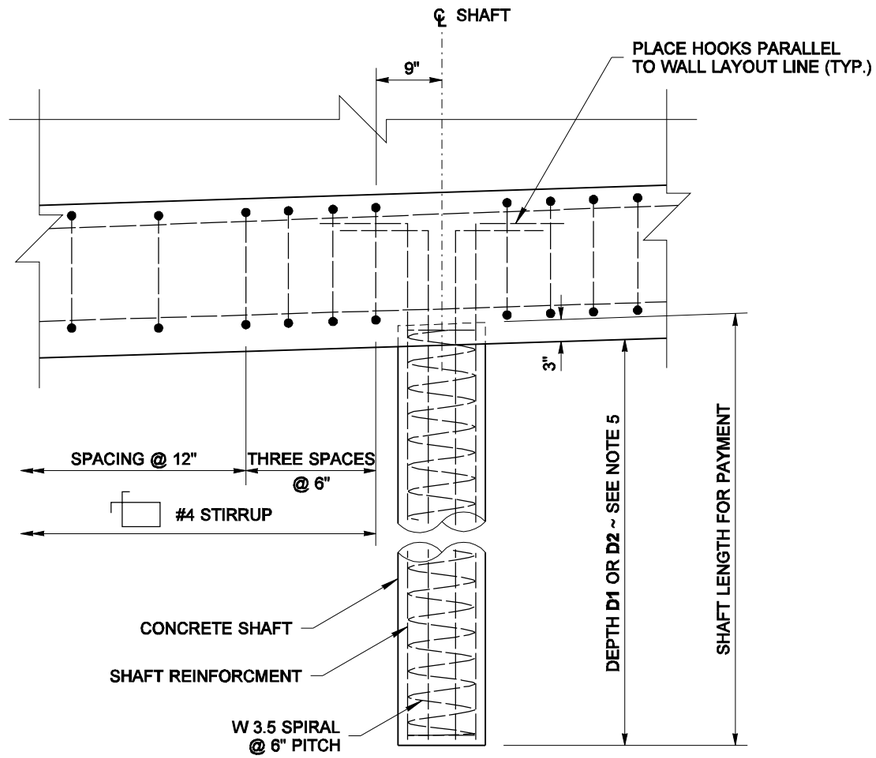

DETAIL "B"

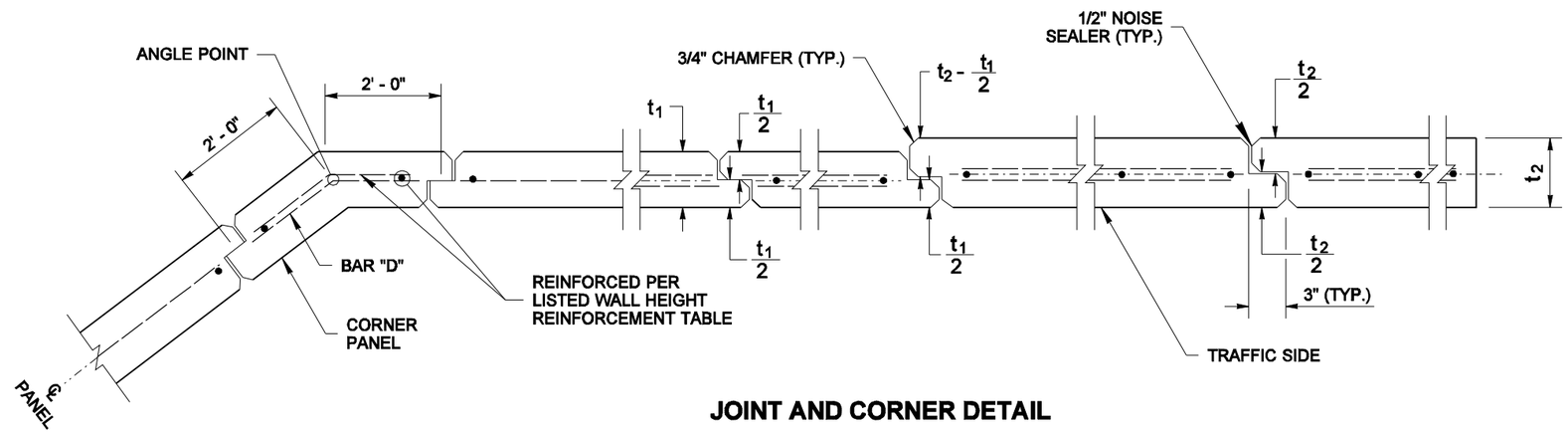

JOINT AND CORNER DETAIL

CAST-IN-PLACE CONCRETE WALL ON SHAFT FOUNDATION

BIJAN KHALEGHI
STATE OF WASHINGTON
27695
REGISTERED
PROFESSIONAL ENGINEER

EXPIRES AUGUST 23, 2006

NOTE: THIS PLAN IS NOT A LEGAL ENGINEERING DOCUMENT BUT AN ELECTRONIC DUPLICATE. THE ORIGINAL, SIGNED BY THE ENGINEER AND APPROVED FOR PUBLICATION, IS KEPT ON FILE AT THE WASHINGTON STATE DEPARTMENT OF TRANSPORTATION. A COPY MAY BE OBTAINED UPON REQUEST.

NOISE BARRIER WALL TYPE 4

STANDARD PLAN D-2.08-00

SHEET 2 OF 2 SHEETS

APPROVED FOR PUBLICATION

Harold J. Peterfeso — STATE DESIGN ENGINEER — *11-10-05* — DATE

Washington State Department of Transportation

EFFECTIVE: APRIL 2, 2007 TO JANUARY 6, 2008
EFFECTIVE: APRIL 2, 2007 TO JANUARY 6, 2008

EFFECTIVE: APRIL 2, 2007 TO JANUARY 6, 2008

DRAWN BY: ADAM COCHRAN

WALL HT H	TYPE 5A BAR "B"&"C"	TYPE 5A BAR "D"&"E"	TYPE 5B BAR "B"&"C"	TYPE 5B BAR "D"&"E"	TYPE 5C BAR "B"&"C"	TYPE 5C BAR "D"&"E"	TYPE 5D BAR "B"&"C"	TYPE 5D BAR "D"&"E"	WALL HT H
6' - 0"	#4 @ 15"	#4 @ 15"	#4 @ 15"	#4 @ 15"	#4 @ 15"	#4 @ 15"	#4 @ 15"	#4 @ 15"	6' - 0"
8' - 0"	#4 @ 15"	#4 @ 15"	#4 @ 15"	#4 @ 15"	#4 @ 15"	#4 @ 15"	#4 @ 15"	#4 @ 15"	8' - 0"
10' - 0"	#4 @ 15"	#4 @ 15"	#4 @ 15"	#4 @ 15"	#4 @ 15"	#4 @ 15"	#4 @ 15"	#4 @ 15"	10' - 0"
12' - 0"	#4 @ 15"	#4 @ 15"	#4 @ 15"	#4 @ 15"	#4 @ 15"	#4 @ 15"	#4 @ 12"	#4 @ 15"	12' - 0"
14' - 0"	#4 @ 15"	#4 @ 15"	#4 @ 11"	#4 @ 11"	#4 @ 11"	#4 @ 11"	#4 @ 10"	#4 @ 11"	14' - 0"
16' - 0"	#4 @ 14"	#4 @ 14"	#4 @ 10"	#4 @ 10"	#4 @ 10"	#4 @ 10"	#4 @ 12"	#4 @ 10"	16' - 0"
18' - 0"	#4 @ 10"	#4 @ 12"	#4 @ 10"	#5 @ 12"	#4 @ 10"	#4 @ 10"	#4 @ 9"	#4 @ 10"	18' - 0"
20' - 0"	#4 @ 10"	#4 @ 10"	#4 @ 9"	#5 @ 9"	#4 @ 10"	#4 @ 7 1/2"	#4 @ 9"	#4 @ 7 1/2"	20' - 0"
22' - 0"	#4 @ 10"	#4 @ 8"	#4 @ 9"	#5 @ 6 1/2"	#4 @ 10"	#4 @ 6"	#4 @ 9"	#4 @ 6"	22' - 0"
24' - 0"	#4 @ 10"	#4 @ 6"	#4 @ 9"	#5 @ 6"	#4 @ 10"	#4 @ 4"	#4 @ 9"	#4 @ 4"	24' - 0"

WIND EXPOSURE & VELOCITY		
NOISE BARRIER TYPE	WIND EXPOSURE	WIND VELOCITY (MPH)
5A	B1	80
5B	B1	90
5C	B2	80
5D	B2	90

SOIL TYPE	
SOIL TYPE	ANGLE OF INTERNAL FRICTION ϕ (DEGREES)
D1	32
D2	38

NOTES

1. Wall to be designated Noise Barrier Wall Type 5A, 5B, 5C or 5D. The Contract specifies actual wall designations.
2. For intermediate wall heights, use the next higher H.
3. Panels shall have at least 3 feet min. of level ground on each side.
4. Construction joints in the footing shall be spaced at 120 feet max.
5. The Contract specifies actual foundation requirements D1 or D2.

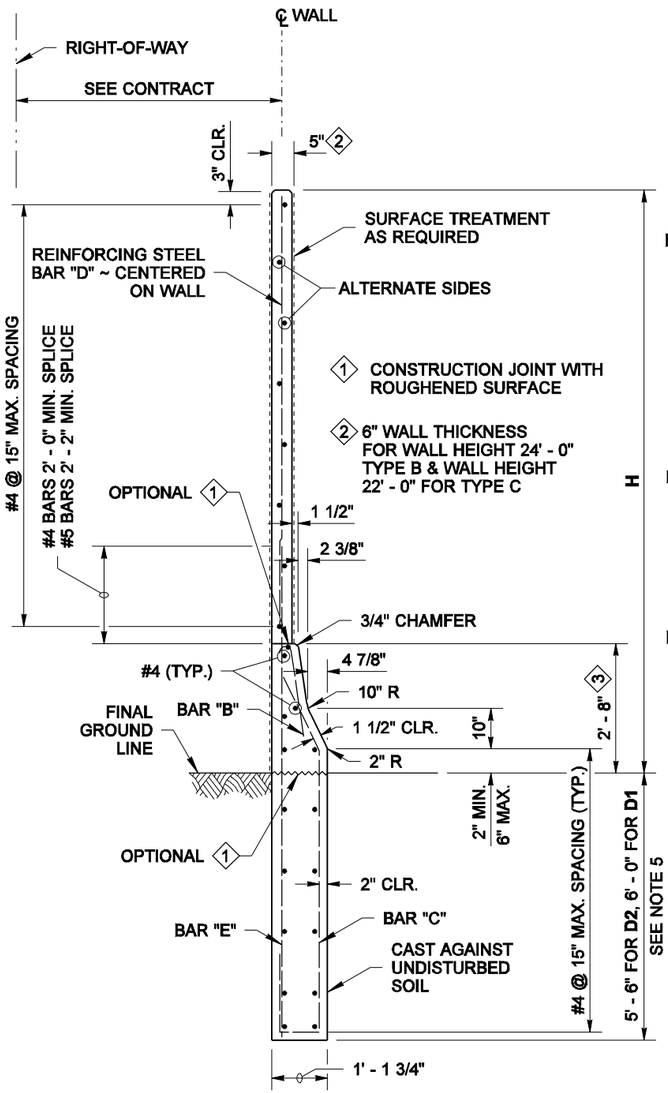

TYPICAL SECTION

③ HEIGHT MAY VARY IF REQUIRED TO PROVIDE A SMOOTH PROFILE CONSISTENT WITH THE ROADWAY PROFILE

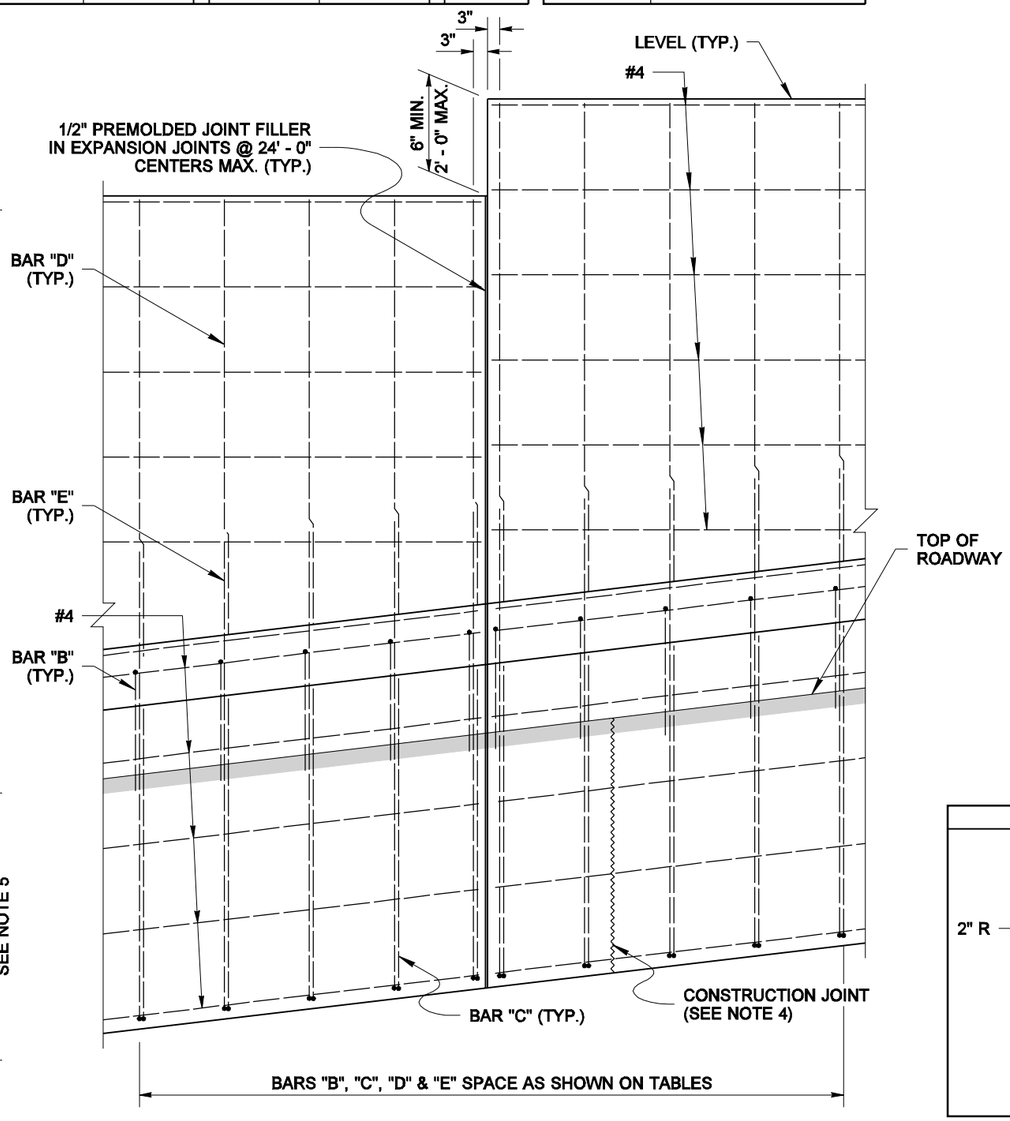

ELEVATION

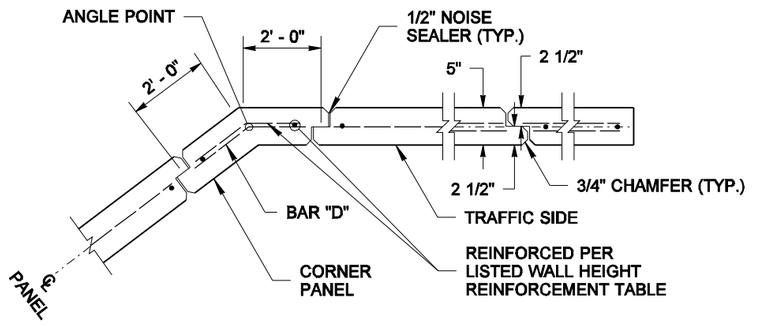

JOINT AND CORNER DETAIL

BENDING DIAGRAM

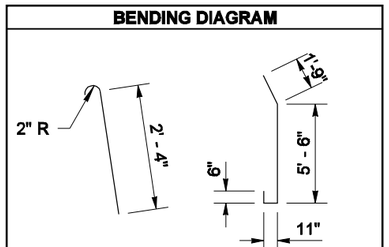

CAST-IN-PLACE W/ TRAFFIC BARRIER ON TRENCH FOOTING

BIJAN KHALEGHI
STATE OF WASHINGTON
27695
REGISTERED
PROFESSIONAL ENGINEER

EXPIRES AUGUST 23, 2006

NOTE: THIS PLAN IS NOT A LEGAL ENGINEERING DOCUMENT BUT AN ELECTRONIC DUPLICATE. THE ORIGINAL, SIGNED BY THE ENGINEER, AND APPROVED FOR PUBLICATION, IS KEPT ON FILE AT THE WASHINGTON STATE DEPARTMENT OF TRANSPORTATION. A COPY MAY BE OBTAINED UPON REQUEST.

NOISE BARRIER WALL TYPE 5

STANDARD PLAN D-2.10-00

SHEET 1 OF 1 SHEET

APPROVED FOR PUBLICATION

Harold J. Peterfeso — STATE DESIGN ENGINEER — *11-10-05* — DATE

Washington State Department of Transportation

EFFECTIVE: APRIL 2, 2007 TO JANUARY 6, 2008

EFFECTIVE: APRIL 2, 2007 TO JANUARY 6, 2008

DRAWN BY: ADAM COCHRAN

WALL HT H	TYPE 5SSA		TYPE 5SSB		TYPE 5SSC		TYPE 5SSD		WALL HT H
	BAR "B"&"C"	BAR "D"&"E"	BAR "B"&"C"	BAR "D"&"E"	BAR "B"&"C"	BAR "D"&"E"	BAR "B"&"C"	BAR "D"&"E"	
6' - 0"	#4 @ 15"	#4 @ 15"	#4 @ 15"	#4 @ 15"	#4 @ 15"	#4 @ 15"	#4 @ 15"	#4 @ 15"	6' - 0"
8' - 0"	#4 @ 15"	#4 @ 15"	#4 @ 15"	#4 @ 15"	#4 @ 15"	#4 @ 15"	#4 @ 15"	#4 @ 15"	8' - 0"
10' - 0"	#4 @ 15"	#4 @ 15"	#4 @ 15"	#4 @ 15"	#4 @ 15"	#4 @ 15"	#4 @ 15"	#4 @ 15"	10' - 0"
12' - 0"	#4 @ 15"	#4 @ 15"	#4 @ 15"	#4 @ 15"	#4 @ 15"	#4 @ 15"	#4 @ 12"	#4 @ 15"	12' - 0"
14' - 0"	#4 @ 15"	#4 @ 15"	#4 @ 11"	#4 @ 11"	#4 @ 11"	#4 @ 11"	#4 @ 10"	#4 @ 11"	14' - 0"
16' - 0"	#4 @ 14"	#4 @ 14"	#4 @ 10"	#4 @ 10"	#4 @ 10"	#4 @ 10"	#4 @ 12"	#4 @ 10"	16' - 0"
18' - 0"	#4 @ 10"	#4 @ 12"	#4 @ 10"	#5 @ 12"	#4 @ 10"	#4 @ 10"	#4 @ 9"	#4 @ 10"	18' - 0"
20' - 0"	#4 @ 10"	#4 @ 10"	#4 @ 9"	#5 @ 9"	#4 @ 10"	#4 @ 7 1/2"	#4 @ 9"	#4 @ 7 1/2"	20' - 0"
22' - 0"	#4 @ 10"	#4 @ 8"	#4 @ 9"	#5 @ 6 1/2"	#4 @ 10"	#4 @ 6"	#4 @ 9"	#4 @ 6"	22' - 0"
24' - 0"	#4 @ 10"	#4 @ 6"	#4 @ 9"	#5 @ 6"	#4 @ 10"	#4 @ 4"	#4 @ 9"	#4 @ 4"	24' - 0"

WIND EXPOSURE & VELOCITY		
NOISE BARRIER TYPE	WIND EXPOSURE	WIND VELOCITY (MPH)
5SSA	B1	80
5SSB	B1	90
5SSC	B2	80
5SSD	B2	90

SOIL TYPE	
SOIL TYPE	ANGLE OF INTERNAL FRICTION ϕ (DEGREES)
D1	32
D2	38

NOTES

1. Wall to be designated Noise Barrier Wall Type 5SSA, 5SSB, 5SSC or 5SSD. The Contract specifies actual wall designations.
2. For intermediate wall heights, use the next higher H.
3. Panels shall have at least 3 feet min. of level ground on each side.
4. Construction joints in the footing shall be spaced at 120 feet max.
5. The Contract specifies actual foundation requirements D1 or D2.

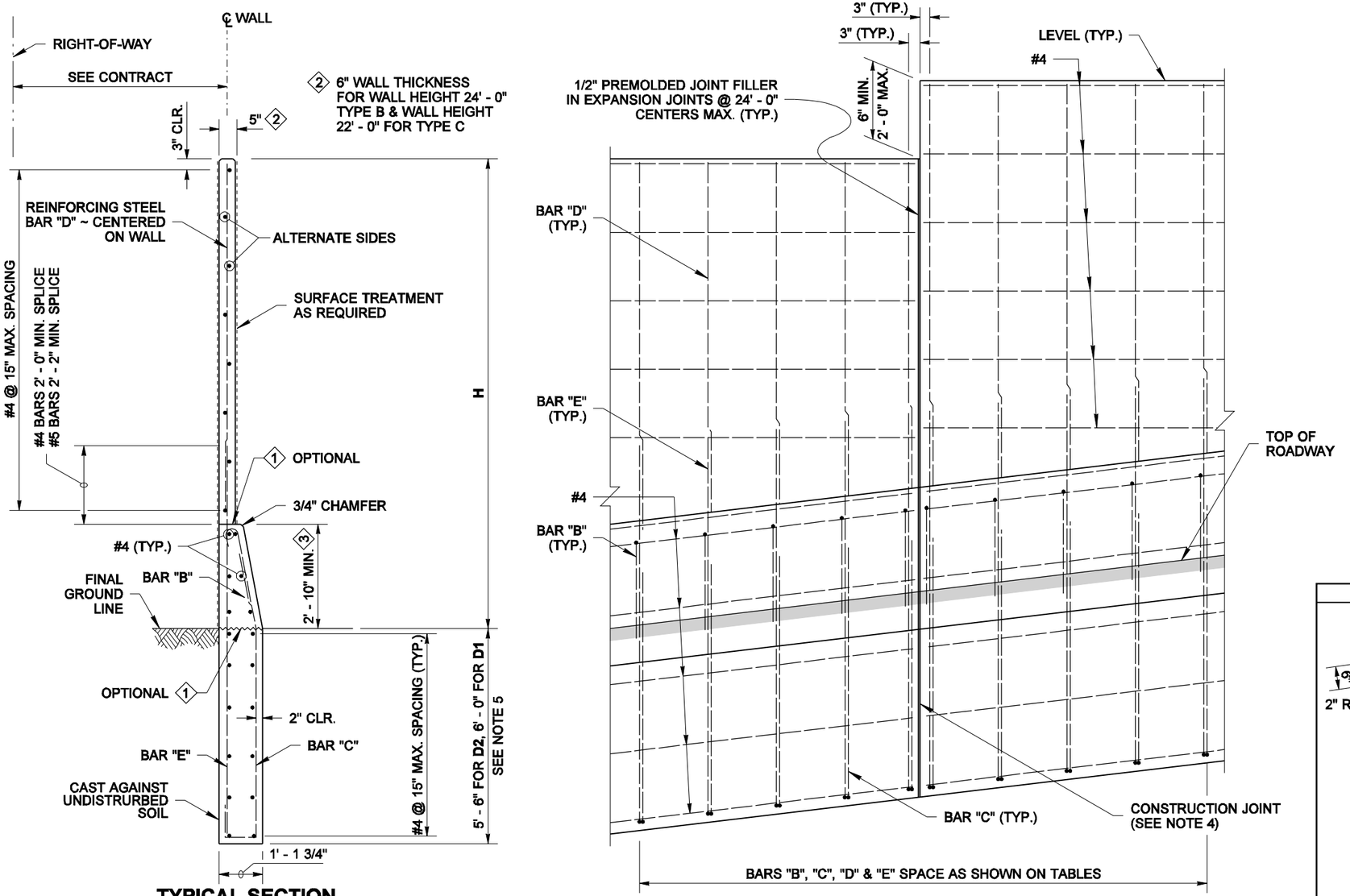

TYPICAL SECTION

3 HEIGHT MAY VARY IF REQUIRED TO PROVIDE A SMOOTH PROFILE CONSISTENT WITH THE ROADWAY PROFILE

1 CONSTRUCTION JOINT WITH ROUGHENED SURFACE

ELEVATION

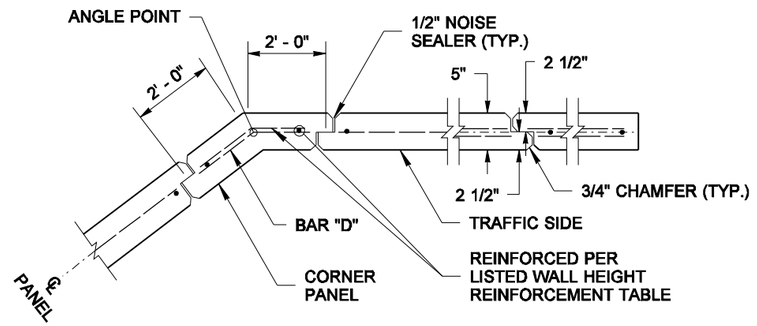

JOINT AND CORNER DETAIL

BENDING DIAGRAM

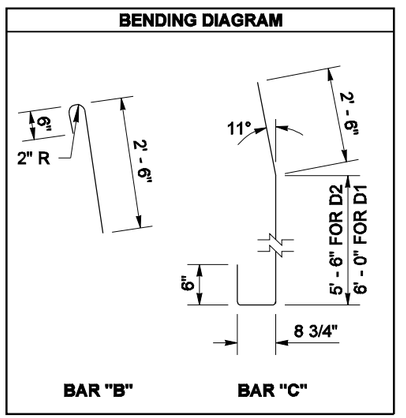

CAST-IN-PLACE W/ SINGLE SLOPE TRAFFIC BARRIER ON TRENCH FOOTING

BIJAN KHALEGHI
STATE OF WASHINGTON
27695
REGISTERED
PROFESSIONAL ENGINEER

EXPIRES AUGUST 23, 2006

NOTE: THIS PLAN IS NOT A LEGAL ENGINEERING DOCUMENT BUT AN ELECTRONIC DUPLICATE. THE ORIGINAL, SIGNED BY THE ENGINEER AND APPROVED FOR PUBLICATION, IS KEPT ON FILE AT THE WASHINGTON STATE DEPARTMENT OF TRANSPORTATION. A COPY MAY BE OBTAINED UPON REQUEST.

NOISE BARRIER WALL TYPE 5SS

STANDARD PLAN D-2.12-00

SHEET 1 OF 1 SHEET

APPROVED FOR PUBLICATION

Harold J. Peterfeso — STATE DESIGN ENGINEER — *11-10-05* — DATE

Washington State Department of Transportation

EFFECTIVE: APRIL 2, 2007 TO JANUARY 6, 2008

EFFECTIVE: APRIL 2, 2007 TO JANUARY 6, 2008
EFFECTIVE: APRIL 2, 2007 TO JANUARY 6, 2008

DRAWN BY: ADAM COCHRAN

WALL HT H	TYPE 6A W	X	BARS "B"&"C"	BARS "D"&"E"	TYPE 6B W	X	BARS "B"&"C"	BARS "D"&"E"	TYPE 6C W	X	BARS "B"&"C"	BARS "D"&"E"	TYPE 6D W	X	BARS "B"&"C"	BARS "D"&"E"	WALL HT H
6' - 0"	5' - 6"	3"	#4 @ 12"	#4 @ 12"	5' - 6"	3"	#4 @ 12"	#4 @ 12"	5' - 6"	3"	#4 @ 12"	#4 @ 12"	5' - 6"	3"	#4 @ 12"	#4 @ 12"	6' - 0"
8' - 0"	5' - 3"	3"	#4 @ 12"	#4 @ 12"	5' - 3"	3"	#4 @ 12"	#4 @ 12"	5' - 3"	3"	#4 @ 12"	#4 @ 12"	5' - 3"	3"	#4 @ 12"	#4 @ 12"	8' - 0"
10' - 0"	5' - 3"	3"	#4 @ 12"	#4 @ 12"	5' - 3"	3"	#4 @ 12"	#4 @ 12"	5' - 3"	3"	#4 @ 12"	#4 @ 12"	5' - 3"	3"	#4 @ 12"	#4 @ 12"	10' - 0"
12' - 0"	5' - 0"	3"	#4 @ 12"	#4 @ 12"	5' - 0"	3"	#4 @ 12"	#4 @ 12"	5' - 0"	3"	#4 @ 12"	#4 @ 12"	5' - 0"	3"	#4 @ 12"	#4 @ 12"	12' - 0"
14' - 0"	4' - 9"	3"	#4 @ 12"	#4 @ 12"	5' - 0"	3"	#4 @ 11"	#4 @ 11"	4' - 9"	3"	#4 @ 12"	#4 @ 12"	5' - 3"	3"	#4 @ 10"	#4 @ 10"	14' - 0"
16' - 0"	5' - 0"	3"	#4 @ 12"	#4 @ 12"	5' - 0"	3"	#4 @ 10"	#4 @ 10"	5' - 0"	3"	#4 @ 10"	#4 @ 10"	5' - 6"	3"	#4 @ 12"	#5 @ 12"	16' - 0"
18' - 0"	5' - 0"	3"	#4 @ 10"	#4 @ 10"	5' - 3"	3' - 0"	#4 @ 12"	#5 @ 12"	5' - 0"	3' - 0"	#4 @ 10"	#4 @ 10"	5' - 9"	3"	#4 @ 9"	#5 @ 9"	18' - 0"

WIND EXPOSURE & VELOCITY		
NOISE BARRIER TYPE	WIND EXPOSURE	WIND VELOCITY (MPH)
6A	B1	80
6B	B1	90
6C	B2	80
6D	B2	90

NOTES

1. Wall to be designated Noise Barrier Wall Type 6A, 6B, 6C or 6D. The Contract specifies actual wall designations.
2. For intermediate wall heights, use the next higher H.
3. Panels shall have at least 3 feet of level ground on each side.
4. Construction joints in the foundation shall be spaced at 120 feet maximum.

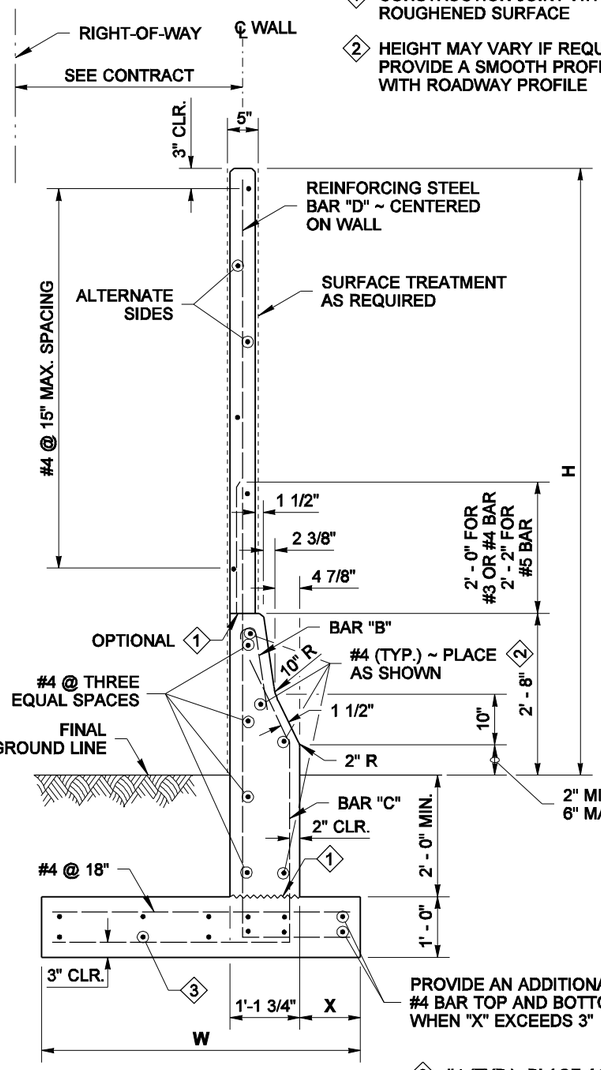

1 CONSTRUCTION JOINT WITH ROUGHENED SURFACE

2 HEIGHT MAY VARY IF REQUIRED TO PROVIDE A SMOOTH PROFILE CONSISTENT WITH ROADWAY PROFILE

TYPICAL SECTION

3 #4 (TYP.) PLACE AS SHOWN WITH 2' - 0" SPLICE AND EXTENDING THRU CONSTRUCTION JOINTS

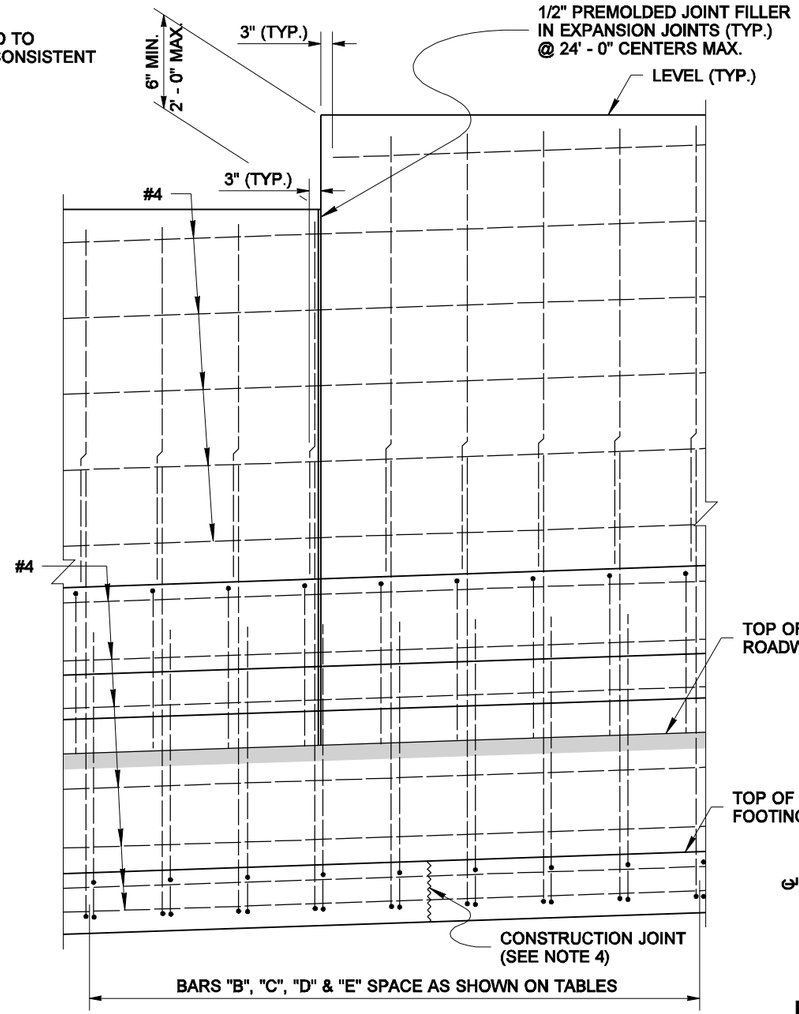

ELEVATION

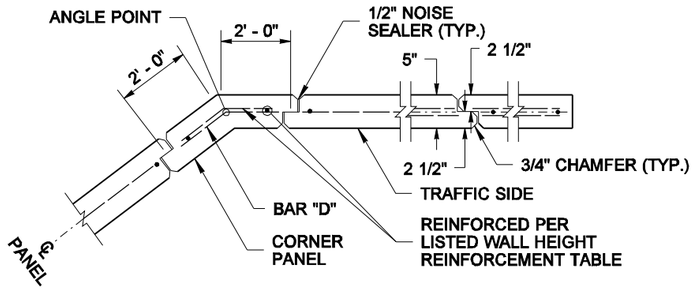

JOINT AND CORNER DETAIL

BENDING DIAGRAM

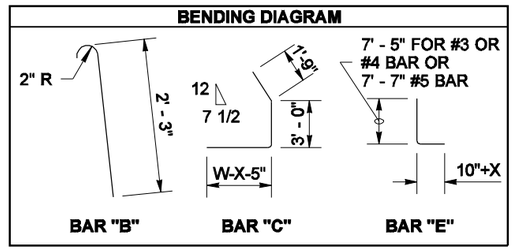

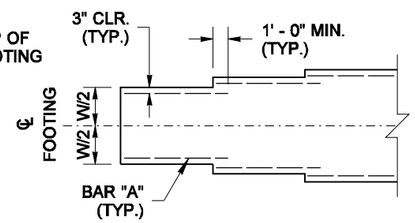

FOOTING WIDTH TRANSITION DETAIL

(FOR LOCATIONS WITHOUT FOOTING STEP)

CAST-IN-PLACE CONCRETE WALL W/ TRAFFIC BARRIER ON SPREAD FOOTING

BIJAN KHALEGHI — STATE OF WASHINGTON — 27695 — REGISTERED PROFESSIONAL ENGINEER

EXPIRES AUGUST 23, 2006

NOTE: THIS PLAN IS NOT A LEGAL ENGINEERING DOCUMENT BUT AN ELECTRONIC DUPLICATE. THE ORIGINAL, SIGNED BY THE ENGINEER, AND APPROVED FOR PUBLICATION, IS KEPT ON FILE AT THE WASHINGTON STATE DEPARTMENT OF TRANSPORTATION. A COPY MAY BE OBTAINED UPON REQUEST.

NOISE BARRIER WALL TYPE 6

STANDARD PLAN D-2.14-00

SHEET 1 OF 1 SHEET

APPROVED FOR PUBLICATION

Harold J. Peterfeso — STATE DESIGN ENGINEER — *11-10-05* — DATE

Washington State Department of Transportation

EFFECTIVE: APRIL 2, 2007 TO JANUARY 6, 2008
EFFECTIVE: APRIL 2, 2007 TO JANUARY 6, 2008

EFFECTIVE: APRIL 2, 2007 TO JANUARY 6, 2008
EFFECTIVE: APRIL 2, 2007 TO JANUARY 6, 2008

DRAWN BY: ADAM COCHRAN

WALL HT H	TYPE 6SSA W	X	BARS "B"&"C"	BARS "D"&"E"	TYPE 6SSB W	X	BARS "B"&"C"	BARS "D"&"E"	TYPE 6SSC W	X	BARS "B"&"C"	BARS "D"&"E"	TYPE 6SSD W	X	BARS "B"&"C"	BARS "D"&"E"	WALL HT H
6' - 0"	5' - 6"	3"	#4 @ 12"	#4 @ 12"	5' - 6"	3"	#4 @ 12"	#4 @ 12"	5' - 6"	3"	#4 @ 12"	#4 @ 12"	5' - 6"	3"	#4 @ 12"	#4 @ 12"	6' - 0"
8' - 0"	5' - 3"	3"	#4 @ 12"	#4 @ 12"	5' - 3"	3"	#4 @ 12"	#4 @ 12"	5' - 3"	3"	#4 @ 12"	#4 @ 12"	5' - 3"	3"	#4 @ 12"	#4 @ 12"	8' - 0"
10' - 0"	5' - 3"	3"	#4 @ 12"	#4 @ 12"	5' - 3"	3"	#4 @ 12"	#4 @ 12"	5' - 3"	3"	#4 @ 12"	#4 @ 12"	5' - 3"	3"	#4 @ 12"	#4 @ 12"	10' - 0"
12' - 0"	5' - 0"	3"	#4 @ 12"	#4 @ 12"	5' - 0"	3"	#4 @ 12"	#4 @ 12"	5' - 0"	3"	#4 @ 12"	#4 @ 12"	5' - 0"	3"	#4 @ 12"	#4 @ 12"	12' - 0"
14' - 0"	4' - 9"	3"	#4 @ 12"	#4 @ 12"	5' - 0"	3"	#4 @ 11"	#4 @ 11"	4' - 9"	3"	#4 @ 12"	#4 @ 12"	5' - 3"	3"	#4 @ 10"	#4 @ 10"	14' - 0"
16' - 0"	5' - 0"	3"	#4 @ 12"	#4 @ 12"	5' - 0"	3"	#4 @ 10"	#4 @ 10"	5' - 0"	3"	#4 @ 10"	#4 @ 10"	5' - 6"	3"	#4 @ 12"	#5 @ 12"	16' - 0"
18' - 0"	5' - 0"	3"	#4 @ 10"	#4 @ 10"	5' - 3"	3' - 0"	#4 @ 12"	#5 @ 12"	5' - 0"	3' - 0"	#4 @ 10"	#4 @ 10"	5' - 9"	3"	#4 @ 9"	#5 @ 9"	18' - 0"

WIND EXPOSURE & VELOCITY		
NOISE BARRIER TYPE	WIND EXPOSURE	WIND VELOCITY (MPH)
6SSA	B1	80
6SSB	B1	90
6SSC	B2	80
6SSD	B2	90

NOTES

1. Wall to be designated Noise Barrier Wall Type 6SSA, 6SSB, 6SSC or 6SSD. The Contract specifies actual wall designations.
2. For intermediate wall heights, use the next higher H.
3. Panels shall have at least 3 feet of level ground on each side.
4. Construction joints in the foundation shall be spaced at 120 feet maximum.

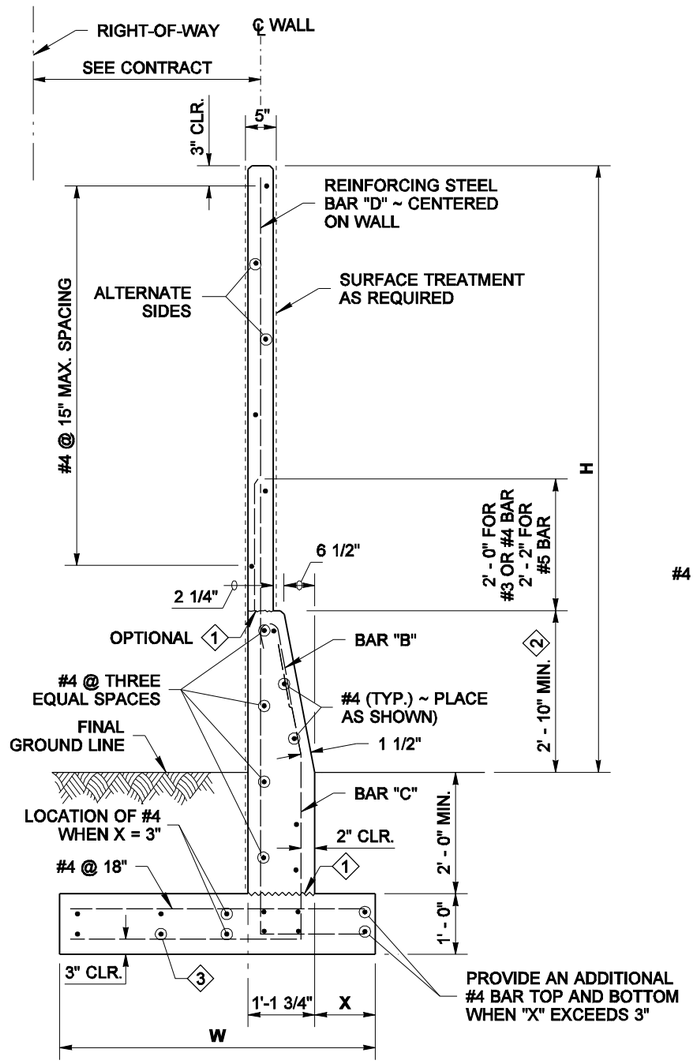

TYPICAL SECTION

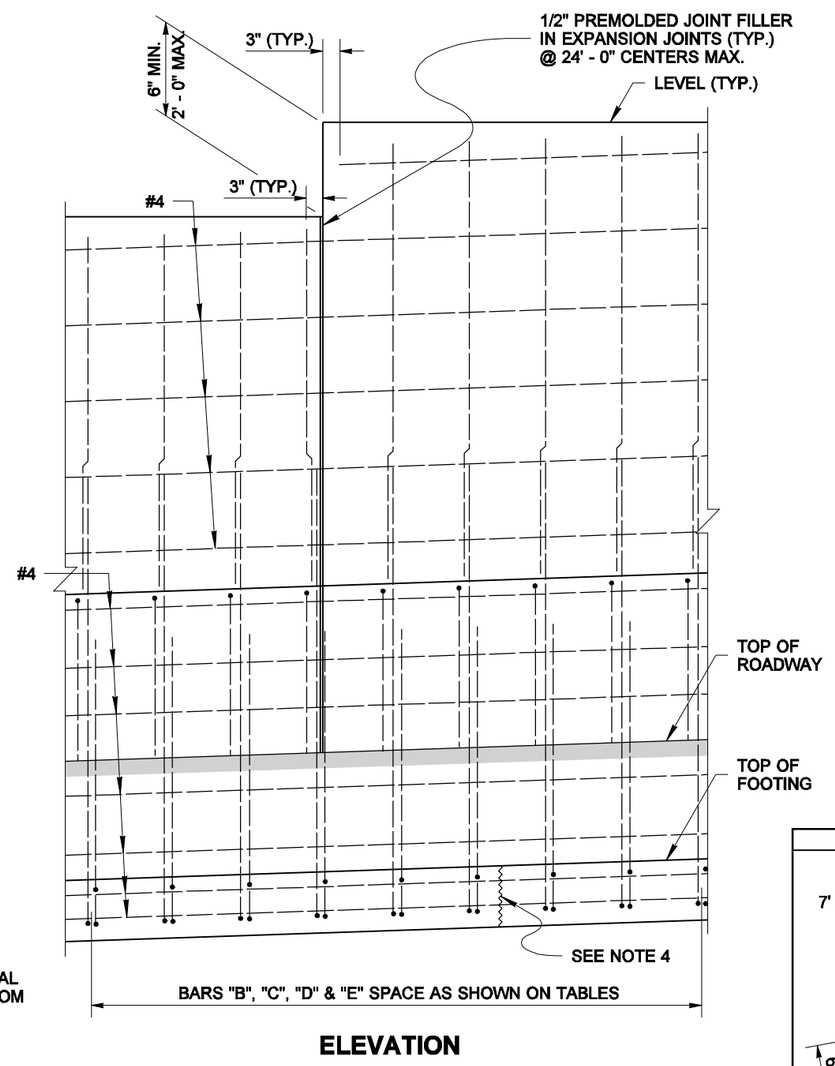

ELEVATION

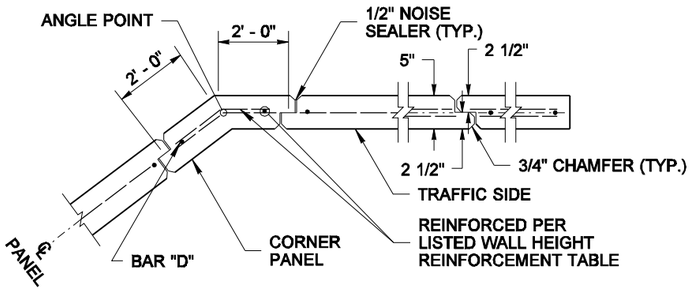

JOINT AND CORNER DETAIL

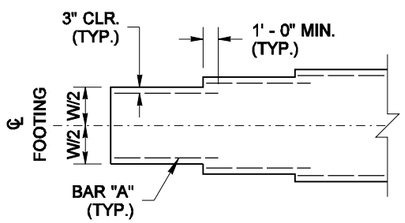

FOOTING WIDTH TRANSITION DETAIL

(FOR LOCATIONS WITHOUT FOOTING STEP)

BENDING DIAGRAM

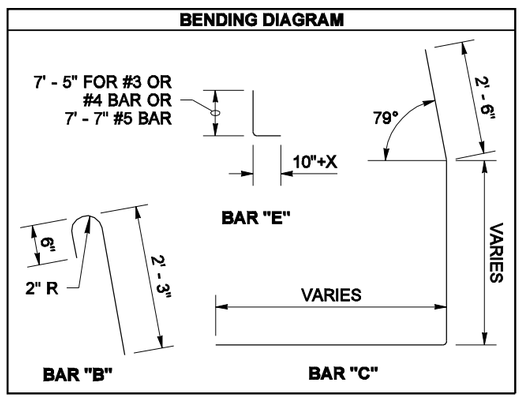

① CONSTRUCTION JOINT WITH ROUGHENED SURFACE

② HEIGHT MAY VARY IF REQUIRED TO PROVIDE A SMOOTH PROFILE CONSISTENT WITH ROADWAY PROFILE

③ #4 (TYP.) PLACE AS SHOWN WITH 2' - 0" SPLICE AND EXTENDING THRU CONSTRUCTION JOINTS

CAST-IN-PLACE CONC. WALL W/ SINGLE SLOPE TRAFFIC BARRIER ON SPREAD FOOTING

BIJAN KHALEGHI — STATE OF WASHINGTON — 27695 — REGISTERED PROFESSIONAL ENGINEER

EXPIRES AUGUST 23, 2006

NOTE: THIS PLAN IS NOT A LEGAL ENGINEERING DOCUMENT BUT AN ELECTRONIC DUPLICATE. THE ORIGINAL, SIGNED BY THE ENGINEER, AND APPROVED FOR PUBLICATION, IS KEPT ON FILE AT THE WASHINGTON STATE DEPARTMENT OF TRANSPORTATION. A COPY MAY BE OBTAINED UPON REQUEST.

NOISE BARRIER WALL TYPE 6SS

STANDARD PLAN D-2.16-00

SHEET 1 OF 1 SHEET

APPROVED FOR PUBLICATION

Harold J. Peterfeso — STATE DESIGN ENGINEER — *11-10-05* — DATE

Washington State Department of Transportation

EFFECTIVE: APRIL 2, 2007 TO JANUARY 6, 2008
EFFECTIVE: APRIL 2, 2007 TO JANUARY 6, 2008

EFFECTIVE: APRIL 2, 2007 TO JANUARY 6, 2008

DRAWN BY: ADAM COCHRAN

WALL HT H	TYPE 7A BARS "B"&"C"	TYPE 7B BARS "B"&"C"	TYPE 7C BARS "B"&"C"	TYPE 7D BARS "B"&"C"	WALL HT H
6' - 0"	#4 @ 15"	#4 @ 15"	#4 @ 15"	#4 @ 15"	6' - 0"
8' - 0"	#4 @ 15"	#4 @ 15"	#4 @ 15"	#4 @ 15"	8' - 0"
10' - 0"	#4 @ 15"	#4 @ 15"	#4 @ 15"	#4 @ 15"	10' - 0"
12' - 0"	#4 @ 15"	#4 @ 15"	#4 @ 15"	#4 @ 12"	12' - 0"
14' - 0"	#4 @ 15"	#4 @ 11"	#4 @ 14"	#4 @ 10"	14' - 0"
16' - 0"	#4 @ 14"	#4 @ 10"	#4 @ 10"	#5 @ 12"	16' - 0"
18' - 0"	#4 @ 12"	#5 @ 12"	#4 @ 10"	#5 @ 9"	18' - 0"

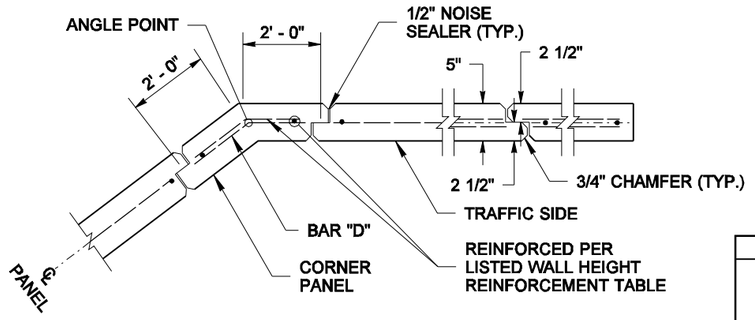

JOINT AND CORNER DETAIL

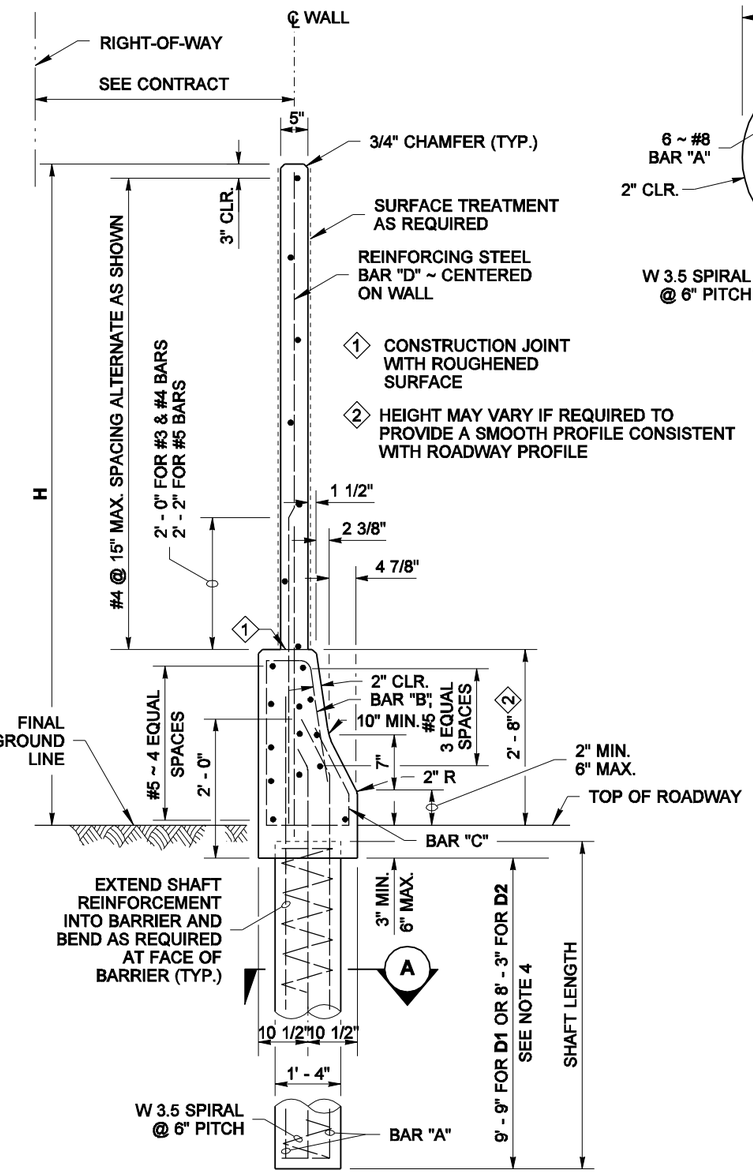

SECTION

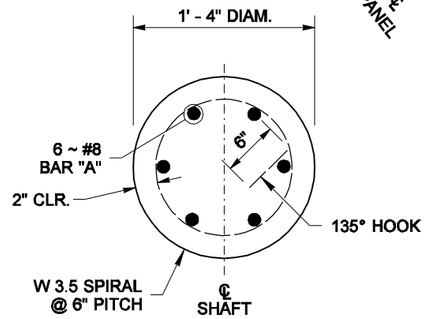

SECTION (A)

1. CONSTRUCTION JOINT WITH ROUGHENED SURFACE
2. HEIGHT MAY VARY IF REQUIRED TO PROVIDE A SMOOTH PROFILE CONSISTENT WITH ROADWAY PROFILE

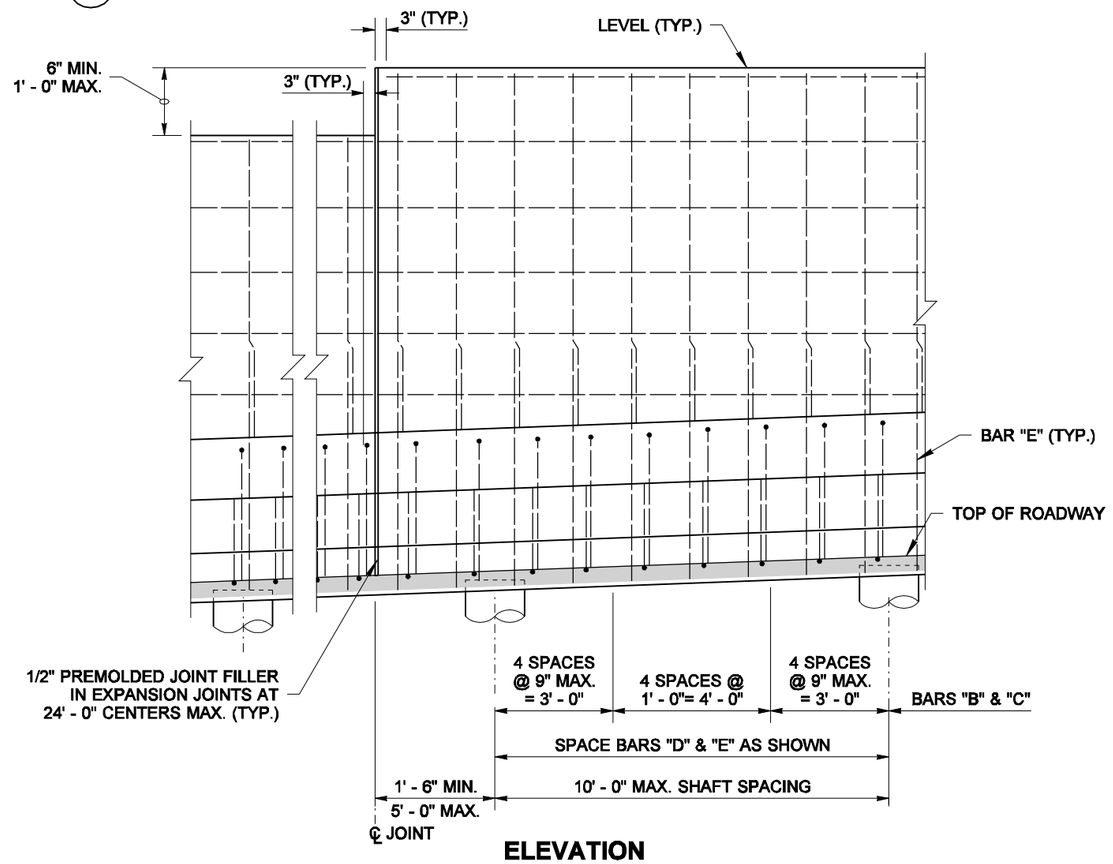

ELEVATION

NOTES

1. Wall to be designated Noise Barrier Wall Type 7A, 7B, 7C or 7D. The Contract specifies actual wall designations.
2. For intermediate wall heights, use the next higher H.
3. Panels shall have at least 3 feet of level ground on each side.
4. The Contract specifies actual foundation requirements D1 or D2.

BENDING DIAGRAM

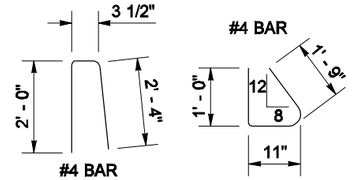

WIND EXPOSURE & VELOCITY		
NOISE BARRIER TYPE	WIND EXPOSURE	WIND VELOCITY (MPH)
7A	B1	80
7B	B1	90
7C	B2	80
7D	B2	90

SOIL TYPE	
SOIL TYPE	ANGLE OF INTERNAL FRICTION ϕ (DEGREES)
D1	32
D2	38

CAST-IN-PLACE CONCRETE WALL W/ TRAFFIC BARRIER ON SHAFT FOUNDATION

BIJAN KHALEGHI — STATE OF WASHINGTON — 27695 — REGISTERED PROFESSIONAL ENGINEER

EXPIRES AUGUST 23, 2006

NOTE: THIS PLAN IS NOT A LEGAL ENGINEERING DOCUMENT BUT AN ELECTRONIC DUPLICATE. THE ORIGINAL, SIGNED BY THE ENGINEER AND APPROVED FOR PUBLICATION, IS KEPT ON FILE AT THE WASHINGTON STATE DEPARTMENT OF TRANSPORTATION. A COPY MAY BE OBTAINED UPON REQUEST.

NOISE BARRIER WALL TYPE 7

STANDARD PLAN D-2.18-00

SHEET 1 OF 1 SHEET

APPROVED FOR PUBLICATION

Harold J. Peterfeso — STATE DESIGN ENGINEER — *11-10-05* — DATE

Washington State Department of Transportation

EFFECTIVE: APRIL 2, 2007 TO JANUARY 6, 2008

EFFECTIVE: APRIL 2, 2007 TO JANUARY 6, 2008

EFFECTIVE: APRIL 2, 2007 TO JANUARY 6, 2008

DRAWN BY: ADAM COCHRAN

WALL HT H	TYPE 7SSA BARS "B"&"C"	TYPE 7SSB BARS "B"&"C"	TYPE 7SSC BARS "B"&"C"	TYPE 7SSD BARS "B"&"C"	WALL HT H
6' - 0"	#4 @ 15"	#4 @ 15"	#4 @ 15"	#4 @ 15"	6' - 0"
8' - 0"	#4 @ 15"	#4 @ 15"	#4 @ 15"	#4 @ 15"	8' - 0"
10' - 0"	#4 @ 15"	#4 @ 15"	#4 @ 15"	#4 @ 15"	10' - 0"
12' - 0"	#4 @ 15"	#4 @ 15"	#4 @ 15"	#4 @ 12"	12' - 0"
14' - 0"	#4 @ 15"	#4 @ 11"	#4 @ 14"	#4 @ 10"	14' - 0"
16' - 0"	#4 @ 14"	#4 @ 10"	#4 @ 10"	#5 @ 12"	16' - 0"
18' - 0"	#4 @ 12"	#5 @ 12"	#4 @ 10"	#5 @ 9"	18' - 0"

BENDING DIAGRAM

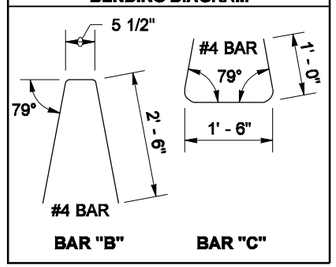

WIND EXPOSURE & VELOCITY		
NOISE BARRIER TYPE	WIND EXPOSURE	WIND VELOCITY (MPH)
7SSA	B1	80
7SSB	B1	90
7SSC	B2	80
7SSD	B2	90

SOIL TYPE	
SOIL TYPE	ANGLE OF INTERNAL FRICTION ϕ (DEGREES)
D1	32
D2	38

NOTES

1. Wall to be designated Noise Barrier Wall Type 7SSA, 7SSB, 7SSC or 7SSD. The Contract specifies actual wall designations.
2. For intermediate wall heights, use the next higher H.
3. Panels shall have at least 3 feet of level ground on each side.
4. The Contract specifies actual foundation requirements D1 or D2.

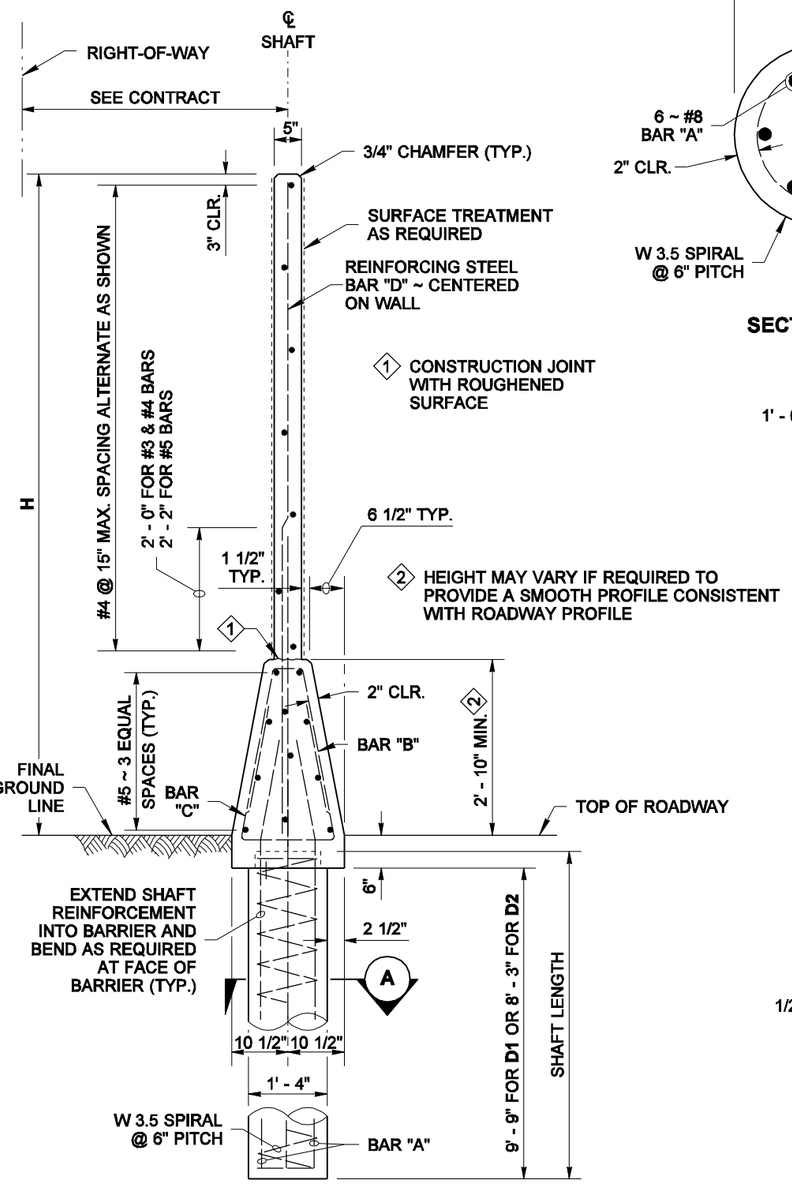

SECTION

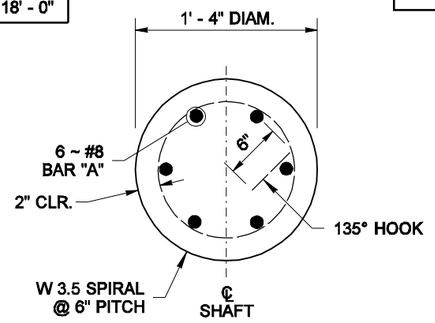

SECTION (A)

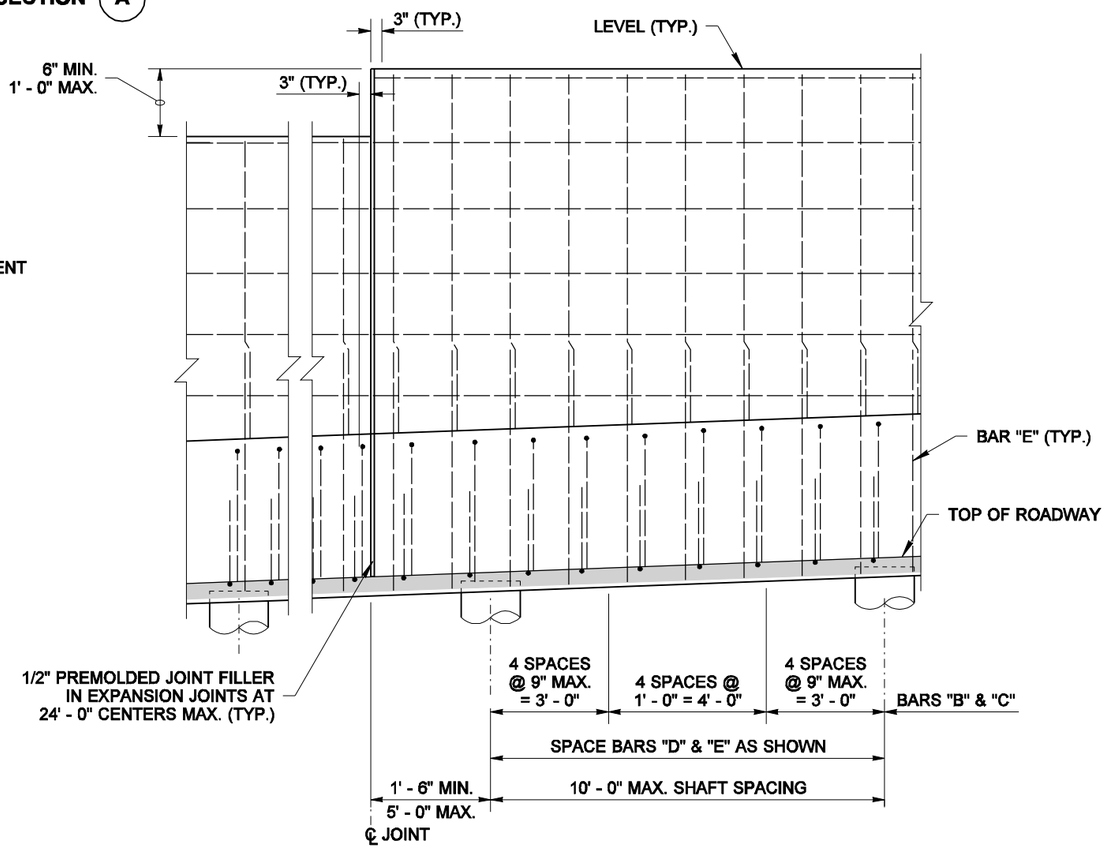

ELEVATION

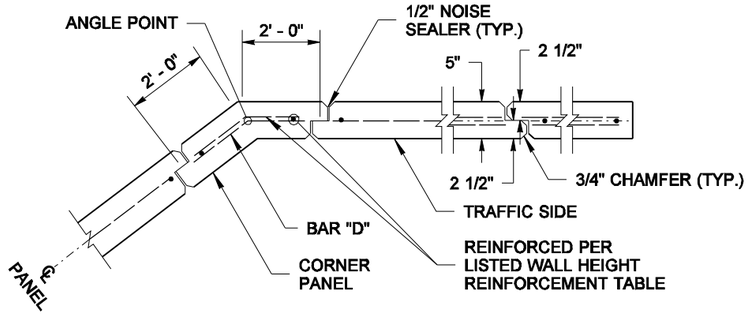

JOINT AND CORNER DETAIL

CAST-IN-PLACE CONC. WALL W/ SINGLE SLOPE TRAFFIC BARRIER ON SHAFT FOUNDATION

BIJAN KHALEGHI
STATE OF WASHINGTON
27695
REGISTERED
PROFESSIONAL ENGINEER

EXPIRES AUGUST 23, 2006

NOTE: THIS PLAN IS NOT A LEGAL ENGINEERING DOCUMENT BUT AN ELECTRONIC DUPLICATE. THE ORIGINAL, SIGNED BY THE ENGINEER AND APPROVED FOR PUBLICATION, IS KEPT ON FILE AT THE WASHINGTON STATE DEPARTMENT OF TRANSPORTATION. A COPY MAY BE OBTAINED UPON REQUEST.

NOISE BARRIER WALL TYPE 7SS

STANDARD PLAN D-2.20-00

SHEET 1 OF 1 SHEET

APPROVED FOR PUBLICATION

Harold J. Peterfeso — STATE DESIGN ENGINEER — *11-10-05* — DATE

Washington State Department of Transportation

EFFECTIVE: APRIL 2, 2007 TO JANUARY 6, 2008

EFFECTIVE: APRIL 2, 2007 TO JANUARY 6, 2008

EFFECTIVE: APRIL 2, 2007 TO JANUARY 6, 2008

EFFECTIVE: APRIL 2, 2007 TO JANUARY 6, 2008

EFFECTIVE: APRIL 2, 2007 TO JANUARY 6, 2008
EFFECTIVE: APRIL 2, 2007 TO JANUARY 6, 2008

DRAWN BY: ADAM COCHRAN

WALL HT H	TYPE 8A t	TYPE 8A DEPTH D1	TYPE 8A DEPTH D2	TYPE 8A BAR "D"	TYPE 8B t	TYPE 8B DEPTH D1	TYPE 8B DEPTH D2	TYPE 8B BAR "D"	TYPE 8C t	TYPE 8C DEPTH D1	TYPE 8C DEPTH D2	TYPE 8C BAR "D"	TYPE 8D t	TYPE 8D DEPTH D1	TYPE 8D DEPTH D2	TYPE 8D BAR "D"	WALL HT H
6' - 0"	5"	3' - 6"	3' - 3"	#3 @ 15"	5"	3' - 9"	3' - 6"	#3 @ 13 1/2"	5"	3' - 6"	3' - 3"	#3 @ 15"	5"	3' - 9"	3' - 6"	#3 @ 11"	6' - 0"
8' - 0"	5"	3' - 9"	3' - 3"	#3 @ 13"	5"	4' - 0"	3' - 9"	#3 @ 8 1/2"	5"	3' - 9"	3' - 6"	#3 @ 11"	5"	4' - 3"	3' - 9"	#4 @ 12"	8' - 0"
10' - 0"	5"	4' - 0"	3' - 6"	#3 @ 8 1/2"	5"	4' - 3"	4' - 0"	#4 @ 10 1/2"	5"	4' - 0"	3' - 9"	#3 @ 12 1/2"	5"	4' - 6"	4' - 0"	#4 @ 11"	10' - 0"
12' - 0"	5"	4' - 3"	3' - 9"	#4 @ 12"	5"	4' - 9"	4' - 3"	#4 @ 10"	5"	4' - 6"	4' - 0"	#4 @ 10 1/2"	5"	5' - 0"	4' - 6"	#5 @ 12"	12' - 0"
14' - 0"	5"	4' - 6"	4' - 0"	#4 @ 10 1/2"	5"	5' - 0"	4' - 6"	#5 @ 11"	5"	4' - 9"	4' - 3"	#4 @ 9 1/2"	5"	5' - 3"	4' - 9"	#5 @ 8 3/4"	14' - 0"
16' - 0"	5"	4' - 9"	4' - 3"	#5 @ 14"	5"	5' - 3"	4' - 9"	#5 @ 8 1/2"	5"	5' - 0"	4' - 6"	#5 @ 11"	5"	5' - 9"	5' - 0"	#6 @ 9 1/2"	16' - 0"
18' - 0"	5"	5' - 0"	4' - 6"	#5 @ 11"	5"	5' - 6"	5' - 0"	#6 @ 9 1/2"	5"	5' - 3"	4' - 9"	#5 @ 8 1/2"	6"	6' - 0"	5' - 3"	#6 @ 9"	18' - 0"
20' - 0"	5"	5' - 3"	4' - 9"	#5 @ 6"	6"	5' - 9"	5' - 3"	#6 @ 9 1/2"	5"	5' - 6"	5' - 0"	#5 @ 6"	6"	6' - 3"	5' - 6"	#6 @ 7 1/2"	20' - 0"
22' - 0"	5"	5' - 6"	5' - 0"	#5 @ 7"	6"	6' - 0"	5' - 6"	#6 @ 8"	6"	5' - 9"	5' - 3"	#5 @ 8"	7"	6' - 6"	5' - 9"	#6 @ 7"	22' - 0"
24' - 0"	5"	5' - 9"	5' - 3"	#6 @ 8"	7"	6' - 3"	5' - 9"	#6 @ 6 1/2"	6"	6' - 0"	5' - 6"	#5 @ 6"	7"	6' - 9"	6' - 0"	#6 @ 6"	24' - 0"

t = WALL THICKNESS

WIND EXPOSURE & VELOCITY		
NOISE BARRIER TYPE	WIND EXPOSURE	WIND VELOCITY (MPH)
8A	B1	80
8B	B1	90
8C	B2	80
8D	B2	90

SOIL TYPE	
SOIL TYPE	ANGLE OF INTERNAL FRICTION ϕ (DEGREES)
D1	32
D2	38

NOTES

1. Wall to be designated Noise Barrier Wall Type 8A, 8B, 8C or 8D. The Contract specifies actual wall designations.
2. For intermediate wall heights, use the next higher H.
3. Panels shall have at least 3' - 0" of level ground on each side.
4. All joints shall be in full contact and sealed.
5. The Contract specifies actual foundation requirements D1 or D2.

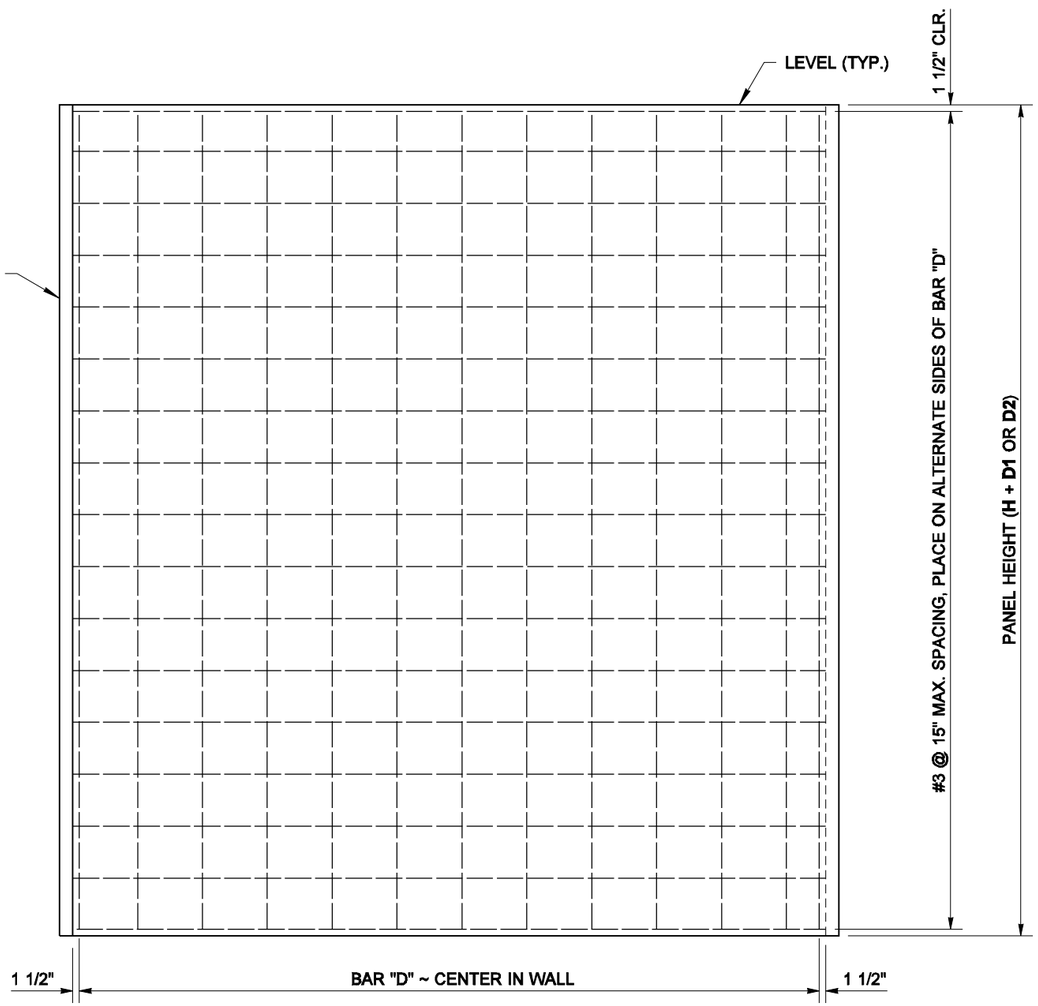

ELEVATION

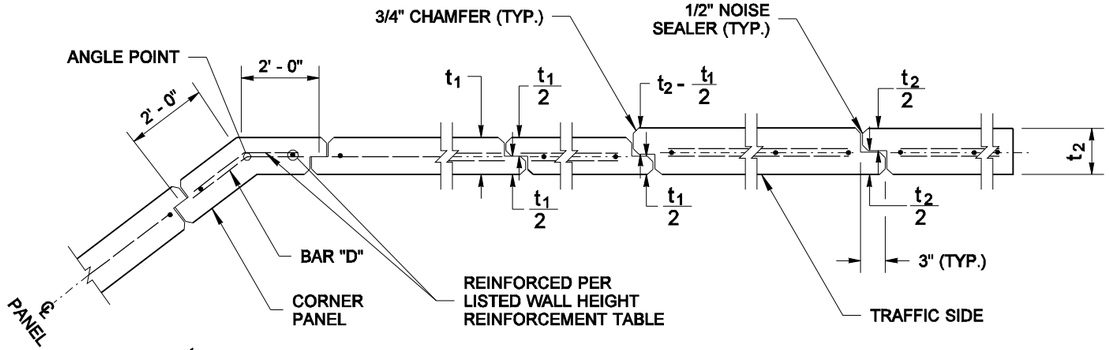

JOINT AND CORNER DETAIL

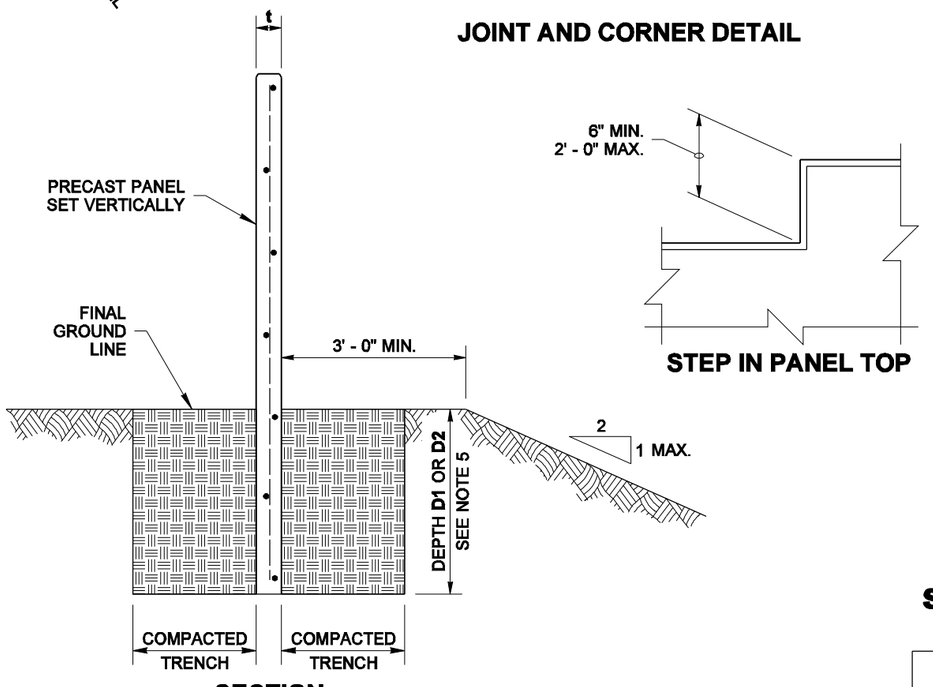

SECTION

THERE SHALL NOT BE MORE THAN 1' - 0" DIFFERENTIAL BACKFILL HEIGHT

STEP IN PANEL TOP

PRECAST CONCRETE WALL ON TRENCH FOOTING

BIJAN KHALEGHI
STATE OF WASHINGTON
27695
REGISTERED
PROFESSIONAL ENGINEER
EXPIRES AUGUST 23, 2006

NOTE: THIS PLAN IS NOT A LEGAL ENGINEERING DOCUMENT BUT AN ELECTRONIC DUPLICATE. THE ORIGINAL, SIGNED BY THE ENGINEER, AND APPROVED FOR PUBLICATION, IS KEPT ON FILE AT THE WASHINGTON STATE DEPARTMENT OF TRANSPORTATION. A COPY MAY BE OBTAINED UPON REQUEST.

NOISE BARRIER WALL TYPE 8

STANDARD PLAN D-2.30-00

SHEET 1 OF 1 SHEET

APPROVED FOR PUBLICATION

Harold J. Peterfeso — STATE DESIGN ENGINEER — *11-10-05* — DATE

Washington State Department of Transportation

EFFECTIVE: APRIL 2, 2007 TO JANUARY 6, 2008
EFFECTIVE: APRIL 2, 2007 TO JANUARY 6, 2008

EFFECTIVE: APRIL 2, 2007 TO JANUARY 6, 2008

DRAWN BY: ADAM COCHRAN

WALL HT H	TYPE 9A						TYPE 9B						TYPE 9C						TYPE 9D						WALL HT H
	W	BARS "A"&"F"	t	BAR "B"	SPIRAL BAR "G"	BARS "D"&"H"	W	BARS "A"&"F"	t	BAR "B"	SPIRAL BAR "G"	BARS "D"&"H"	W	BARS "A"&"F"	t	BAR "B"	SPIRAL BAR "G"	BARS "D"&"H"	W	BARS "A"&"F"	t	BAR "B"	SPIRAL BAR "G"	BARS D & H	
6' - 0"	2' - 0"	3 ~ #4	5"	#4 @ 18"	W2.0 @ 2"	#3 @ 15"	2' - 3"	3 ~ #4	5"	#4 @ 18"	W2.0 @ 2"	#3 @ 12"	2' - 0"	3 ~ #4	5"	#4 @ 18"	W2.0 @ 2"	#3 @ 15"	2' - 6"	3 ~ #4	5"	#4 @ 18"	W2.0 @ 2"	#3 @ 11"	6' - 0"
8' - 0"	2' - 3"	3 ~ #4	5"	#4 @ 18"	W2.0 @ 2"	#3 @ 12"	2' - 9"	3 ~ #4	5"	#4 @ 18"	W3.0 @ 2"	#4 @ 15"	2' - 6"	3 ~ #4	5"	#4 @ 18"	W2.0 @ 2"	#3 @ 10"	3' - 3"	5 ~ #4	5"	#4 @ 18"	W3.0 @ 2"	#4 @ 12"	8' - 0"
10' - 0"	2' - 6"	3 ~ #4	5"	#4 @ 18"	W2.0 @ 2"	#3 @ 9"	3' - 3"	5 ~ #4	5"	#4 @ 18"	W3.0 @ 2"	#4 @ 10"	2' - 9"	3 ~ #4	5"	#4 @ 18"	W3.0 @ 2"	#4 @ 12"	3' - 6"	5 ~ #4	5"	#4 @ 18"	W3.0 @ 2"	#4 @ 10"	10' - 0"
12' - 0"	3' - 0"	5 ~ #4	5"	#4 @ 18"	W3.0 @ 2"	#4 @ 12"	3' - 9"	5 ~ #4	5"	#4 @ 18"	W3.0 @ 2"	#4 @ 10"	3' - 3"	5 ~ #4	5"	#4 @ 18"	W3.0 @ 2"	#4 @ 10"	4' - 3"	5 ~ #4	5"	#4 @ 18"	W3.0 @ 1 3/4"	#5 @ 12"	12' - 0"
14' - 0"	3' - 3"	5 ~ #4	5"	#4 @ 18"	W3.0 @ 2"	#4 @ 10"	4' - 3"	5 ~ #4	5"	#4 @ 18"	W3.0 @ 1 3/4"	#5 @ 11"	3' - 9"	5 ~ #4	5"	#4 @ 18"	W3.0 @ 2"	#4 @ 9"	4' - 9"	5 ~ #4	5"	#4 @ 18"	W3.0 @ 1 3/4"	#5 @ 8"	14' - 0"
16' - 0"	3' - 9"	5 ~ #4	5"	#4 @ 18"	W3.0 @ 2"	#4 @ 9"	4' - 9"	5 ~ #4	5"	#4 @ 18"	W4.0 @ 2"	#6 @ 12"	4' - 3"	5 ~ #4	5"	#4 @ 18"	W3.0 @ 1 3/4"	#5 @ 11"	5' - 6"	5 ~ #4	5"	#4 @ 18"	W4.0 @ 2"	#6 @ 9"	16' - 0"
18' - 0"	4' - 0"	5 ~ #4	5"	#4 @ 18"	W3.0 @ 1 3/4"	#5 @ 11"	5' - 3"	5 ~ #4	5"	#4 @ 18"	W4.0 @ 2"	#6 @ 9"	4' - 6"	5 ~ #4	5"	#4 @ 18"	W4.0 @ 2"	#6 @ 12"	6' - 0"	5 ~ #4	6"	#4 @ 18"	W4.0 @ 2"	#6 @ 9"	18' - 0"
20' - 0"	5' - 0"	5 ~ #4	5"	#4 @ 18"	W3.0 @ 1 1/2"	#5 @ 9"	6' - 0"	5 ~ #4	6"	#4 @ 18"	W4.0 @ 2"	#6 @ 9"	5' - 3"	5 ~ #4	5"	#4 @ 18"	W4.0 @ 2"	#6 @ 10"	6' - 6"	6 ~ #4	6"	#4 @ 12"	W4.0 @ 1 3/4"	#6 @ 7"	20' - 0"
22' - 0"	5' - 6"	5 ~ #4	5"	#4 @ 18"	W3.0 @ 1 1/2"	#5 @ 7"	6' - 3"	5 ~ #4	6"	#4 @ 12"	W4.0 @ 1 3/4"	#6 @ 8"	5' - 9"	5 ~ #4	6"	#4 @ 18"	W4.0 @ 2"	#6 @ 9"	7' - 0"	6 ~ #4	7"	#4 @ 12"	W4.0 @ 1 3/4"	#6 @ 7"	22' - 0"
24' - 0"	6' - 0"	5 ~ #4	5"	#4 @ 15"	W3.0 @ 1 1/2"	#5 @ 6"	6' - 9"	5 ~ #4	7"	#4 @ 11"	W4.0 @ 1 3/4"	#6 @ 8"	6' - 3"	5 ~ #4	6"	#4 @ 12"	W4.0 @ 1 3/4"	#6 @ 8"	7' - 6"	6 ~ #4	7"	#4 @ 15"	W4.0 @ 1 1/2"	#6 @ 6"	24' - 0"

t = WALL THICKNESS

WIND EXPOSURE & VELOCITY		
NOISE BARRIER TYPE	WIND EXPOSURE	WIND VELOCITY (MPH)
9A	B1	80
9B	B1	90
9C	B2	80
9D	B2	90

BENDING DIAGRAM

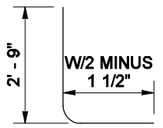

BAR "H"

NOTES

1. Wall to be designated Noise Barrier Wall Type 9A, 9B, 9C or 9D. The Contract specifies actual wall designation.
2. For intermediate wall heights, use the next higher H.
3. Panels shall have at least 3' - 0" of level ground on each side.
4. Construction joints in the footing shall be spaced at 120 feet maximum.
5. All joints shall be in full contact and sealed.

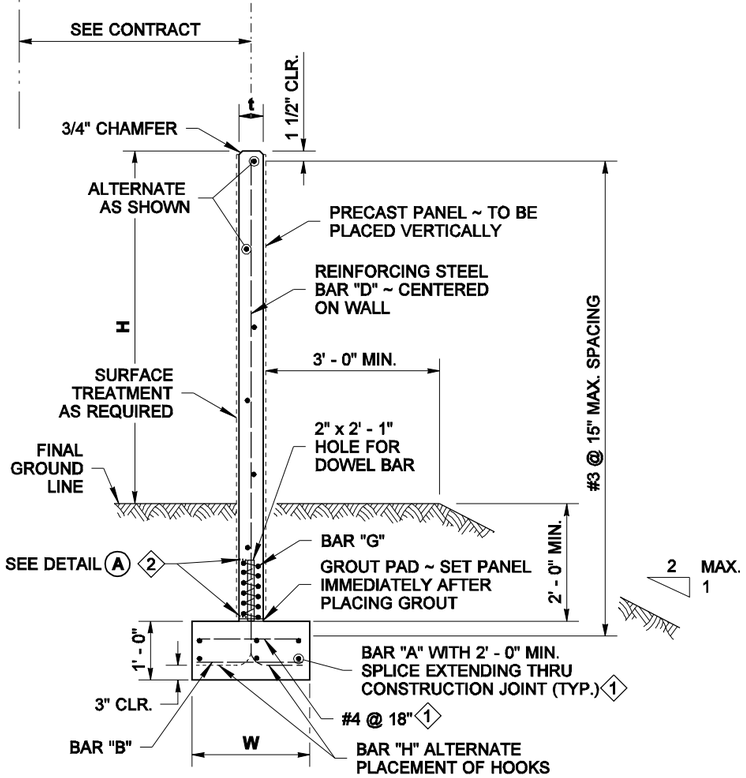

TYPICAL SECTION

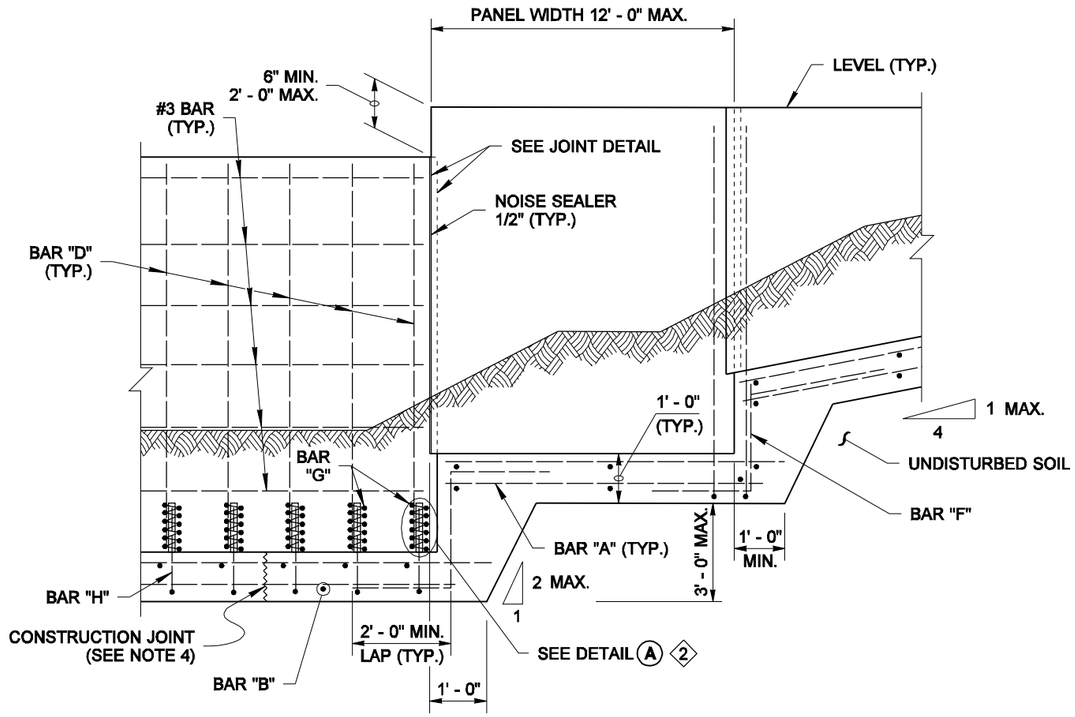

ELEVATION

1 REQUIRED FOR WALL HEIGHT 24' - 0" ~ TYPE 9C, WALLS 22' - 0" & 24' - 0" ~ TYPE 9B & WALLS 20' - 0", 22' - 0" & 24' - 0" ~ TYPE 9D.

PRECAST CONCRETE WALL ON SPREAD FOOTING

BIJAN KHALEGHI — STATE OF WASHINGTON — 27695 — REGISTERED PROFESSIONAL ENGINEER

EXPIRES AUGUST 23, 2006

NOTE: THIS PLAN IS NOT A LEGAL ENGINEERING DOCUMENT BUT AN ELECTRONIC DUPLICATE. THE ORIGINAL, SIGNED BY THE ENGINEER AND APPROVED FOR PUBLICATION, IS KEPT ON FILE AT THE WASHINGTON STATE DEPARTMENT OF TRANSPORTATION. A COPY MAY BE OBTAINED UPON REQUEST.

NOISE BARRIER WALL TYPE 9

STANDARD PLAN D-2.32-00

SHEET 1 OF 2 SHEETS

APPROVED FOR PUBLICATION

Harold J. Peterfeso — STATE DESIGN ENGINEER — *11-10-05* — DATE

Washington State Department of Transportation

EFFECTIVE: APRIL 2, 2007 TO JANUARY 6, 2008

EFFECTIVE: APRIL 2, 2007 TO JANUARY 6, 2008
EFFECTIVE: APRIL 2, 2007 TO JANUARY 6, 2008

DRAWN BY: ADAM COCHRAN

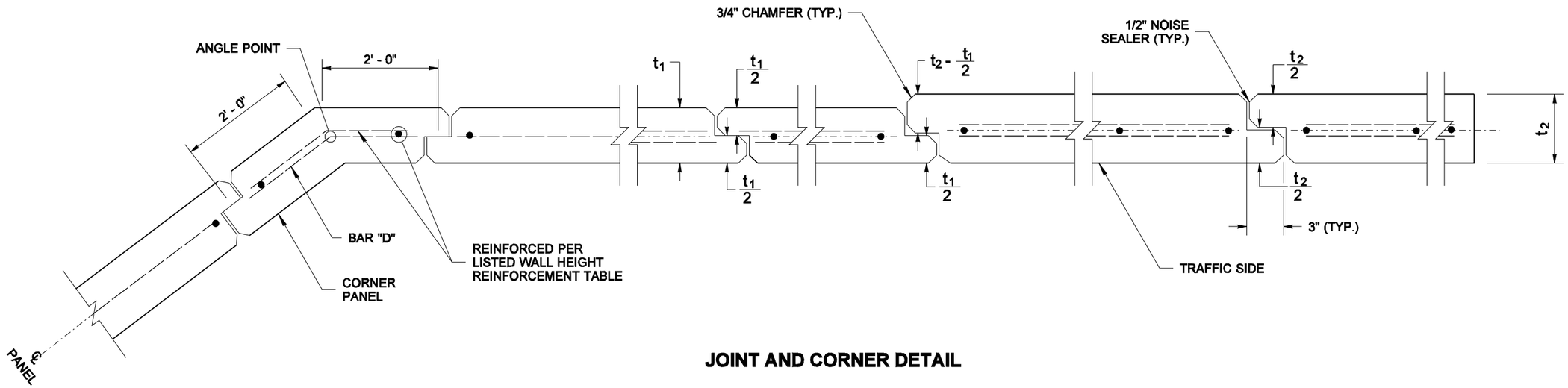

JOINT AND CORNER DETAIL

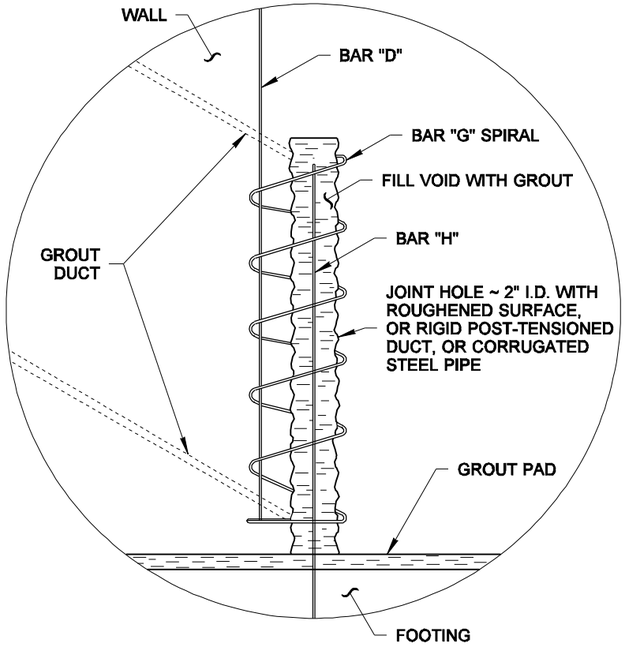

2 FILL THE JOINT HOLE WITH GROUT USING DUCTS. DUCTS SHALL BE LOCATED ON PANEL FACE OPPOSITE TRAFFIC

DETAIL A

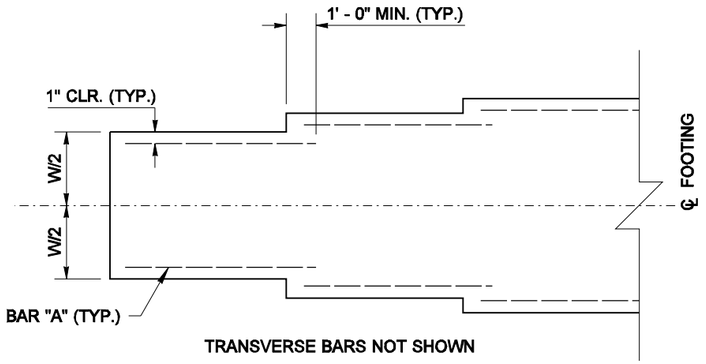

TRANSVERSE BARS NOT SHOWN

FOOTING WIDTH TRANSITION DETAIL

FOR LOCATIONS WITHOUT FOOTING STEP

PRECAST CONCRETE WALL ON SPREAD FOOTING

BIJAN KHALEGHI
STATE OF WASHINGTON
27695
REGISTERED
PROFESSIONAL ENGINEER

EXPIRES AUGUST 23, 2006

NOTE: THIS PLAN IS NOT A LEGAL ENGINEERING DOCUMENT BUT AN ELECTRONIC DUPLICATE. THE ORIGINAL, SIGNED BY THE ENGINEER AND APPROVED FOR PUBLICATION, IS KEPT ON FILE AT THE WASHINGTON STATE DEPARTMENT OF TRANSPORTATION. A COPY MAY BE OBTAINED UPON REQUEST.

NOISE BARRIER WALL TYPE 9

STANDARD PLAN D-2.32-00

SHEET 2 OF 2 SHEETS

APPROVED FOR PUBLICATION

Harold J. Peterfeso — STATE DESIGN ENGINEER
11-10-05 — DATE

Washington State Department of Transportation

EFFECTIVE: APRIL 2, 2007 TO JANUARY 6, 2008
EFFECTIVE: APRIL 2, 2007 TO JANUARY 6, 2008

EFFECTIVE: APRIL 2, 2007 TO JANUARY 6, 2008

DRAWN BY: ADAM COCHRAN

WALL HT H	TYPE 10A						TYPE 10B						TYPE 10C						TYPE 10D						WALL HT H
	W	BARS "A"&"F"	t	BAR "B"	SPIRAL BAR "G"	BARS "D"&"H"	W	BARS "A"&"F"	t	BAR "B"	SPIRAL BAR "G"	BARS "D"&"H"	W	BARS "A"&"F"	t	BAR "B"	SPIRAL BAR "G"	BARS "D"&"H"	W	BARS "A"&"F"	t	BAR "B"	SPIRAL BAR "G"	BARS "D"&"H"	
6' - 0"	2' - 0"	3 ~ #4	5"	#4 @ 18"	W2.0 @ 2"	#3 @ 15"	2' - 3"	3 ~ #4	5"	#4 @ 18"	W2.0 @ 2"	#3 @ 12"	2' - 0"	3 ~ #4	5"	#4 @ 18"	W2.0 @ 2"	#3 @ 15"	2' - 6"	3 ~ #4	5"	#4 @ 18"	W2.0 @ 2"	#3 @ 11"	6' - 0"
8' - 0"	2' - 3"	3 ~ #4	5"	#4 @ 18"	W2.0 @ 2"	#3 @ 12"	2' - 9"	3 ~ #4	5"	#4 @ 18"	W3.0 @ 2"	#4 @ 15"	2' - 6"	3 ~ #4	5"	#4 @ 18"	W2.0 @ 2"	#3 @ 10"	3' - 3"	5 ~ #4	5"	#4 @ 18"	W3.0 @ 2"	#4 @ 12"	8' - 0"
10' - 0"	2' - 6"	3 ~ #4	5"	#4 @ 18"	W2.0 @ 2"	#3 @ 9"	3' - 3"	5 ~ #4	5"	#4 @ 18"	W3.0 @ 2"	#4 @ 10"	2' - 9"	3 ~ #4	5"	#4 @ 18"	W3.0 @ 2"	#4 @ 12"	3' - 6"	5 ~ #4	5"	#4 @ 18"	W3.0 @ 2"	#4 @ 10"	10' - 0"
12' - 0"	3' - 0"	5 ~ #4	5"	#4 @ 18"	W3.0 @ 2"	#4 @ 12"	3' - 9"	5 ~ #4	5"	#4 @ 18"	W3.0 @ 2"	#4 @ 10"	3' - 3"	5 ~ #4	5"	#4 @ 18"	W3.0 @ 2"	#4 @ 10"	4' - 3"	5 ~ #4	5"	#4 @ 18"	W3.0 @ 1 3/4"	#5 @ 12"	12' - 0"
14' - 0"	3' - 3"	5 ~ #4	5"	#4 @ 18"	W3.0 @ 2"	#4 @ 10"	4' - 3"	5 ~ #4	5"	#4 @ 18"	W3.0 @ 1 3/4"	#5 @ 11"	3' - 9"	5 ~ #4	5"	#4 @ 18"	W3.0 @ 2"	#4 @ 9"	5' - 3"	5 ~ #4	5"	#4 @ 18"	W3.0 @ 1 3/4"	#5 @ 8"	14' - 0"
16' - 0"	3' - 9"	5 ~ #4	5"	#4 @ 18"	W3.0 @ 2"	#4 @ 9"	5' - 3"	5 ~ #4	5"	#4 @ 18"	W4.0 @ 2"	#6 @ 12"	4' - 3"	5 ~ #4	5"	#4 @ 18"	W3.0 @ 1 3/4"	#5 @ 11"	6' - 3"	5 ~ #4	5"	#4 @ 18"	W4.0 @ 2"	#6 @ 9"	16' - 0"
18' - 0"	4' - 0"	5 ~ #4	5"	#4 @ 18"	W3.0 @ 1 3/4"	#5 @ 11"	6' - 0"	5 ~ #4	5"	#4 @ 18"	W4.0 @ 2"	#6 @ 9"	5' - 0"	5 ~ #4	5"	#4 @ 18"	W4.0 @ 2"	#6 @ 12"	7' - 0"	5 ~ #4	6"	#4 @ 18"	W4.0 @ 2"	#6 @ 9"	18' - 0"
20' - 0"	5' - 0"	5 ~ #4	5"	#4 @ 18"	W3.0 @ 1 1/2"	#5 @ 9"	7' - 0"	5 ~ #4	6"	#4 @ 18"	W4.0 @ 2"	#6 @ 9"	5' - 9"	5 ~ #4	5"	#4 @ 18"	W4.0 @ 2"	#6 @ 10"	8' - 0"	6 ~ #4	6"	#4 @ 12"	W4.0 @ 1 3/4"	#6 @ 7"	20' - 0"
22' - 0"	5' - 6"	5 ~ #4	5"	#4 @ 18"	W3.0 @ 1 1/2"	#5 @ 7"	7' - 9"	5 ~ #4	6"	#4 @ 12"	W4.0 @ 1 3/4"	#6 @ 8"	6' - 6"	5 ~ #4	6"	#4 @ 18"	W4.0 @ 2"	#6 @ 9"	9' - 0"	6 ~ #4	7"	#4 @ 12"	W4.0 @ 1 3/4"	#6 @ 7"	22' - 0"
24' - 0"	6' - 3"	5 ~ #4	5"	#4 @ 15"	W3.0 @ 1 1/2"	#5 @ 6"	8' - 6"	5 ~ #4	7"	#4 @ 11"	W4.0 @ 1 3/4"	#6 @ 8"	7' - 6"	5 ~ #4	6"	#4 @ 12"	W4.0 @ 1 3/4"	#6 @ 8"	9' - 9"	6 ~ #4	7"	#4 @ 15"	W4.0 @ 1 3/4"	#6 @ 6"	24' - 0"

t = WALL THICKNESS

BENDING DIAGRAM

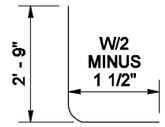

BAR "H"

WIND EXPOSURE & VELOCITY		
NOISE BARRIER TYPE	WIND EXPOSURE	WIND VELOCITY (MPH)
10A	B1	80
10B	B1	90
10C	B2	80
10D	B2	90

NOTES

1. Wall to be designated Noise Barrier Wall Type 10A, 10B, 10C or 10D. The Contract specifies actual wall designation.
2. For intermediate wall heights, use the next higher H.
3. Panels shall have at least 3' - 0" of level ground on each side.
4. Construction joints in the footing shall be spaced at 120 feet maximum.
5. All joints shall be in full contact and sealed.

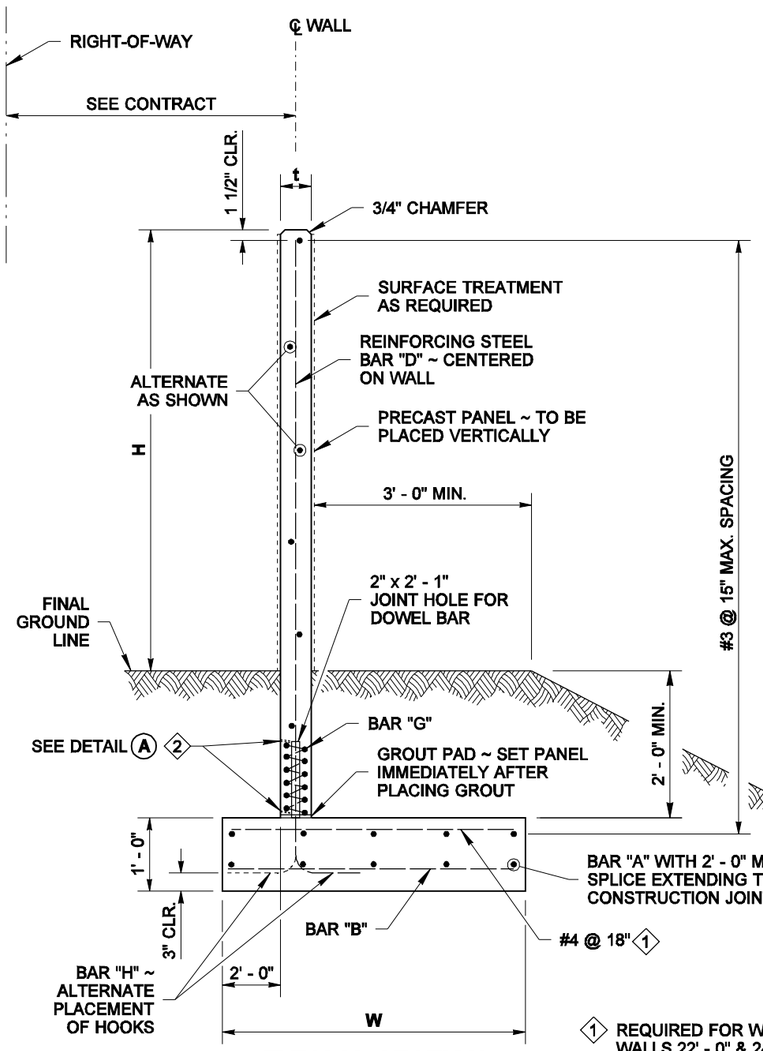

TYPICAL SECTION

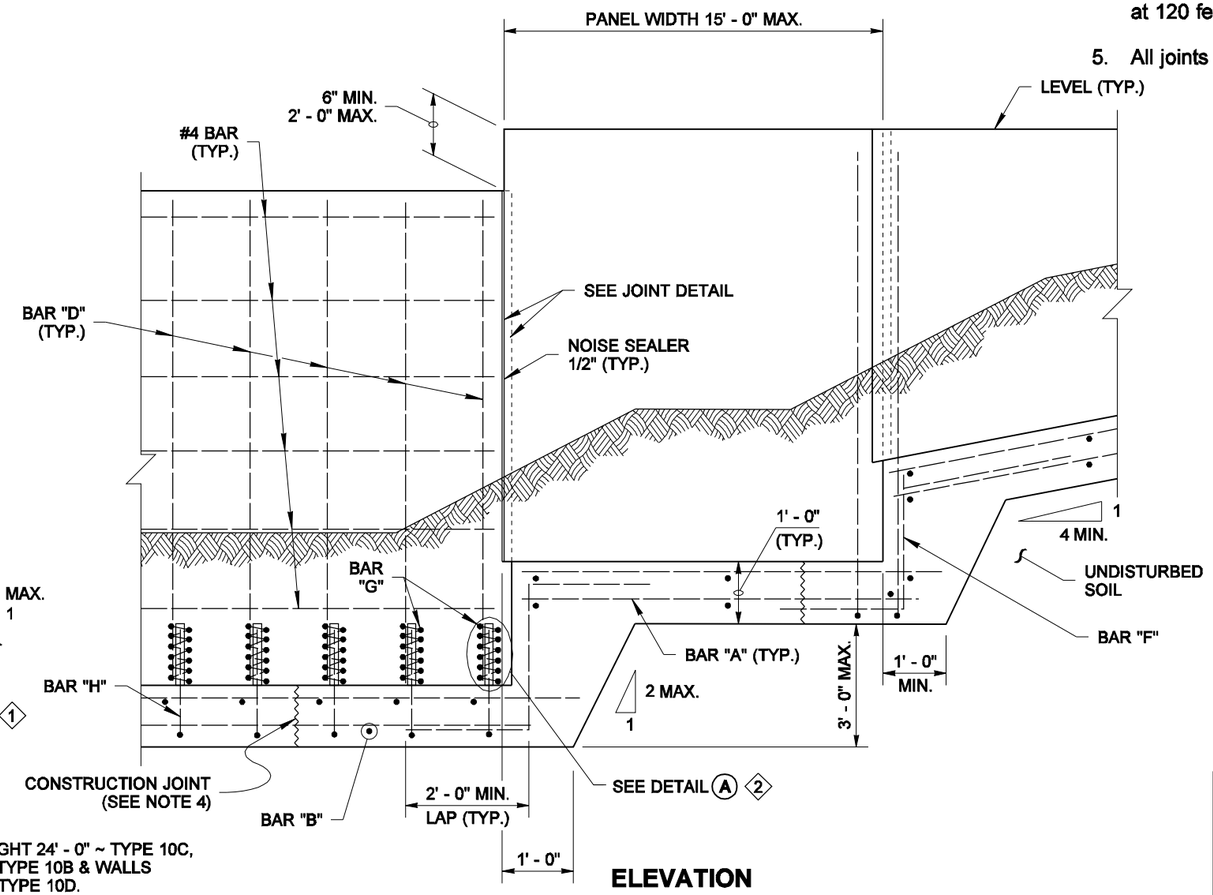

ELEVATION

1 REQUIRED FOR WALL HEIGHT 24' - 0" ~ TYPE 10C, WALLS 22' - 0" & 24' - 0" ~ TYPE 10B & WALLS 20' - 0", 22' - 0" & 24' - 0" ~ TYPE 10D.

PRECAST CONCRETE WALL ON OFFSET SPREAD FOOTING



EXPIRES AUGUST 23, 2006

NOTE: THIS PLAN IS NOT A LEGAL ENGINEERING DOCUMENT BUT AN ELECTRONIC DUPLICATE. THE ORIGINAL, SIGNED BY THE ENGINEER AND APPROVED FOR PUBLICATION, IS KEPT ON FILE AT THE WASHINGTON STATE DEPARTMENT OF TRANSPORTATION. A COPY MAY BE OBTAINED UPON REQUEST.

NOISE BARRIER WALL TYPE 10

STANDARD PLAN D-2.34-00

SHEET 1 OF 2 SHEETS

APPROVED FOR PUBLICATION

Harold J. Peterfeso — STATE DESIGN ENGINEER — *11-10-05* — DATE

Washington State Department of Transportation

EFFECTIVE: APRIL 2, 2007 TO JANUARY 6, 2008

EFFECTIVE: APRIL 2, 2007 TO JANUARY 6, 2008
EFFECTIVE: APRIL 2, 2007 TO JANUARY 6, 2008

DRAWN BY: ADAM COCHRAN

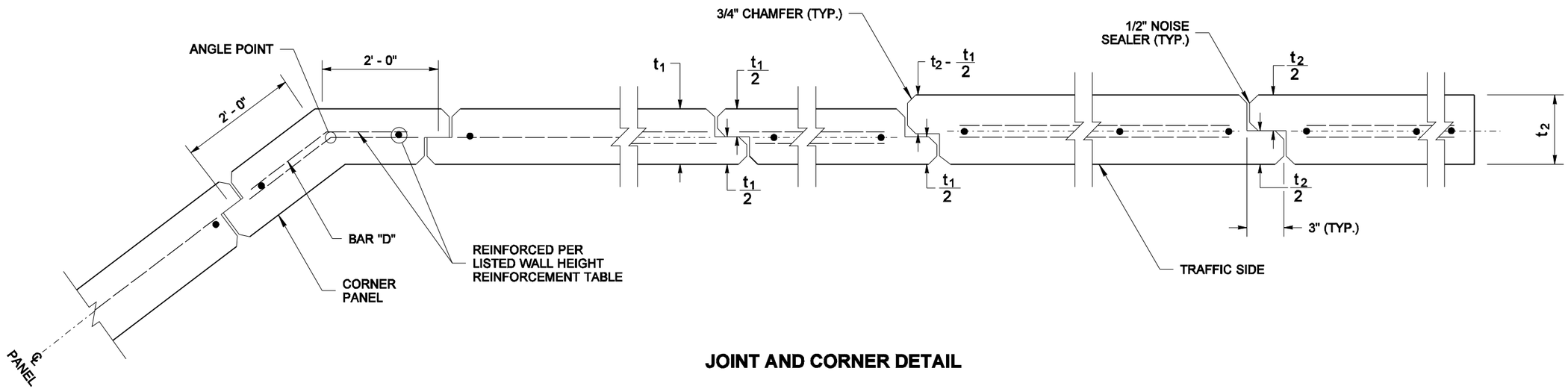

JOINT AND CORNER DETAIL

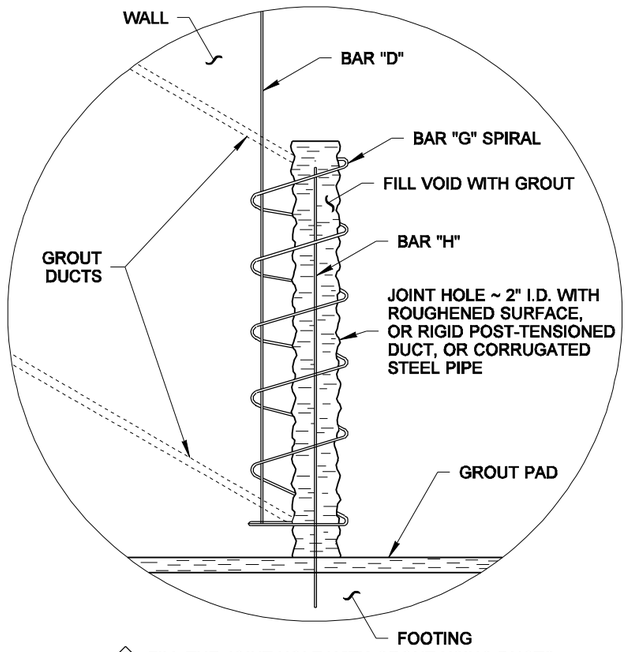

2 FILL THE JOINT HOLE WITH GROUT USING DUCTS. DUCTS SHALL BE LOCATED ON PANEL FACE OPPOSITE TRAFFIC

DETAIL A

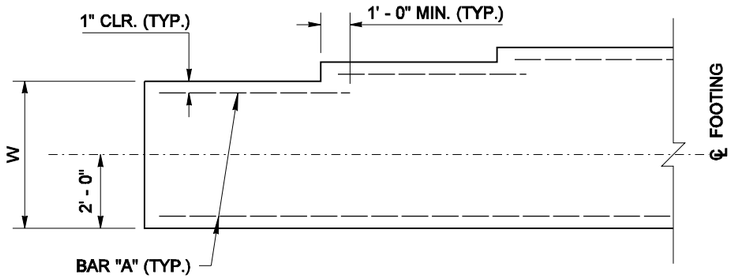

(TRANSVERSE BARS NOT SHOWN)

FOOTING WIDTH TRANSITION DETAIL

FOR LOCATIONS WITHOUT FOOTING STEP

PRECAST CONCRETE WALL ON OFFSET SPREAD FOOTING

BIJAN KHALEGHI
STATE OF WASHINGTON
27695
REGISTERED
PROFESSIONAL ENGINEER

EXPIRES AUGUST 23, 2006

NOTE: THIS PLAN IS NOT A LEGAL ENGINEERING DOCUMENT BUT AN ELECTRONIC DUPLICATE. THE ORIGINAL, SIGNED BY THE ENGINEER AND APPROVED FOR PUBLICATION, IS KEPT ON FILE AT THE WASHINGTON STATE DEPARTMENT OF TRANSPORTATION. A COPY MAY BE OBTAINED UPON REQUEST.

NOISE BARRIER WALL TYPE 10

STANDARD PLAN D-2.34-00

SHEET 2 OF 2 SHEETS

APPROVED FOR PUBLICATION

Harold J. Peterfeso — STATE DESIGN ENGINEER — *11-10-05* — DATE

Washington State Department of Transportation

EFFECTIVE: APRIL 2, 2007 TO JANUARY 6, 2008
EFFECTIVE: APRIL 2, 2007 TO JANUARY 6, 2008

EFFECTIVE: APRIL 2, 2007 TO JANUARY 6, 2008
EFFECTIVE: APRIL 2, 2007 TO JANUARY 6, 2008

DRAWN BY: ADAM COCHRAN

WALL HT H	TYPE 11A							TYPE 11B							TYPE 11C							TYPE 11D							WALL HT H
	DEPTH D1	DEPTH D2	BAR "A"	BAR "B"	Y	PLATE THICK. T	ANCHOR BOLT. DIAM.	DEPTH D1	DEPTH D2	BAR "A"	BAR "B"	Y	PLATE THICK. T	ANCHOR BOLT. DIAM.	DEPTH D1	DEPTH D2	BAR "A"	BAR "B"	Y	PLATE THICK. T	ANCHOR BOLT. DIAM.	DEPTH D1	DEPTH D2	BAR "A"	BAR "B"	Y	PLATE THICK. T	ANCHOR BOLT. DIAM.	
6' - 0"	5' - 0"	4' - 6"	4 ~ #3	4 ~ #7	2' - 0"	1/2"	1"	5' - 9"	5' - 0"	4 ~ #3	4 ~ #7	2' - 0"	1/2"	1"	5' - 3"	4' - 9"	4 ~ #3	4 ~ #7	2' - 0"	1/2"	1"	6' - 3"	5' - 3"	4 ~ #3	4 ~ #7	2' - 0"	1/2"	1"	6' - 0"
8' - 0"	5' - 6"	5' - 0"	4 ~ #3	4 ~ #7	2' - 0"	1/2"	1"	6' - 6"	5' - 9"	4 ~ #3	4 ~ #7	2' - 0"	5/8"	1"	6' - 0"	5' - 3"	4 ~ #3	4 ~ #7	2' - 0"	5/8"	1"	7' - 0"	6' - 0"	4 ~ #3	4 ~ #7	2' - 0"	3/4"	1"	8' - 0"
10' - 0"	6' - 3"	5' - 3"	4 ~ #3	4 ~ #7	2' - 0"	5/8"	1"	7' - 3"	6' - 3"	4 ~ #4	4 ~ #7	2' - 2"	3/4"	1"	6' - 9"	5' - 9"	4 ~ #3	4 ~ #7	2' - 0"	3/4"	1"	8' - 0"	6' - 9"	4 ~ #4	4 ~ #7	2' - 2"	7/8"	1"	10' - 0"
12' - 0"	6' - 9"	5' - 9"	4 ~ #3	4 ~ #7	2' - 0"	3/4"	1"	8' - 0"	6' - 9"	4 ~ #4	4 ~ #7	2' - 7"	1"	1"	7' - 6"	6' - 3"	4 ~ #4	4 ~ #7	2' - 2"	1"	1"	8' - 9"	7' - 3"	4 ~ #5	4 ~ #7	2' - 7"	1"	1"	12' - 0"
14' - 0"	7' - 3"	6' - 3"	4 ~ #4	4 ~ #7	2' - 2"	3/4"	1"	8' - 9"	7' - 6"	4 ~ #5	4 ~ #7	2' - 7"	1 1/8"	1"	8' - 0"	6' - 9"	4 ~ #4	4 ~ #7	2' - 7"	1"	1"	9' - 6"	8' - 0"	4 ~ #5	4 ~ #7	3' - 3"	1 1/4"	1"	14' - 0"
16' - 0"	7' - 9"	6' - 9"	4 ~ #4	4 ~ #7	2' - 7"	7/8"	1"	9' - 6"	8' - 0"	4 ~ #6	4 ~ #7	3' - 3"	1 1/4"	1"	8' - 9"	7' - 3"	4 ~ #5	4 ~ #7	2' - 7"	1 1/8"	1"	10' - 3"	8' - 6"	4 ~ #6	4 ~ #8	4' - 3"	1 1/4"	1"	16' - 0"
18' - 0"	8' - 6"	7' - 0"	4 ~ #5	4 ~ #7	2' - 7"	1"	1"	10' - 3"	8' - 6"	4 ~ #6	4 ~ #8	4' - 3"	1 3/8"	1"	9' - 3"	7' - 9"	4 ~ #6	4 ~ #7	3' - 3"	1 1/8"	1"	11' - 0"	9' - 3"	4 ~ #7	4 ~ #8	4' - 3"	1 3/8"	1"	18' - 0"
20' - 0"	9' - 0"	7' - 6"	4 ~ #5	4 ~ #7	3' - 3"	1 1/4"	1"	10' - 9"	9' - 0"	4 ~ #7	4 ~ #8	4' - 3"	1 3/8"	1"	10' - 0"	8' - 3"	4 ~ #6	4 ~ #8	4' - 3"	1 1/4"	1"	11' - 9"	9' - 9"	4 ~ #8	4 ~ #9	5' - 5"	1 1/2"	1 1/8"	20' - 0"
22' - 0"	9' - 6"	8' - 0"	4 ~ #6	4 ~ #7	3' - 3"	1 3/8"	1"	11' - 6"	9' - 6"	4 ~ #8	4 ~ #9	5' - 5"	1 1/2"	1"	10' - 6"	8' - 9"	4 ~ #7	4 ~ #8	4' - 3"	1 3/8"	1"	12' - 6"	10' - 3"	4 ~ #8	4 ~ #10	6' - 10"	1 5/8"	1 1/4"	22' - 0"
24' - 0"	10' - 0"	8' - 3"	4 ~ #6	4 ~ #8	4' - 3"	1 1/2"	1"	12' - 0"	10' - 0"	4 ~ #8	4 ~ #10	6' - 10"	1 5/8"	1"	11' - 3"	9' - 3"	4 ~ #7	4 ~ #9	5' - 5"	1 1/2"	1"	13' - 3"	11' - 0"	4 ~ #9	4 ~ #11	8' - 5"	1 3/4"	1 1/4"	24' - 0"

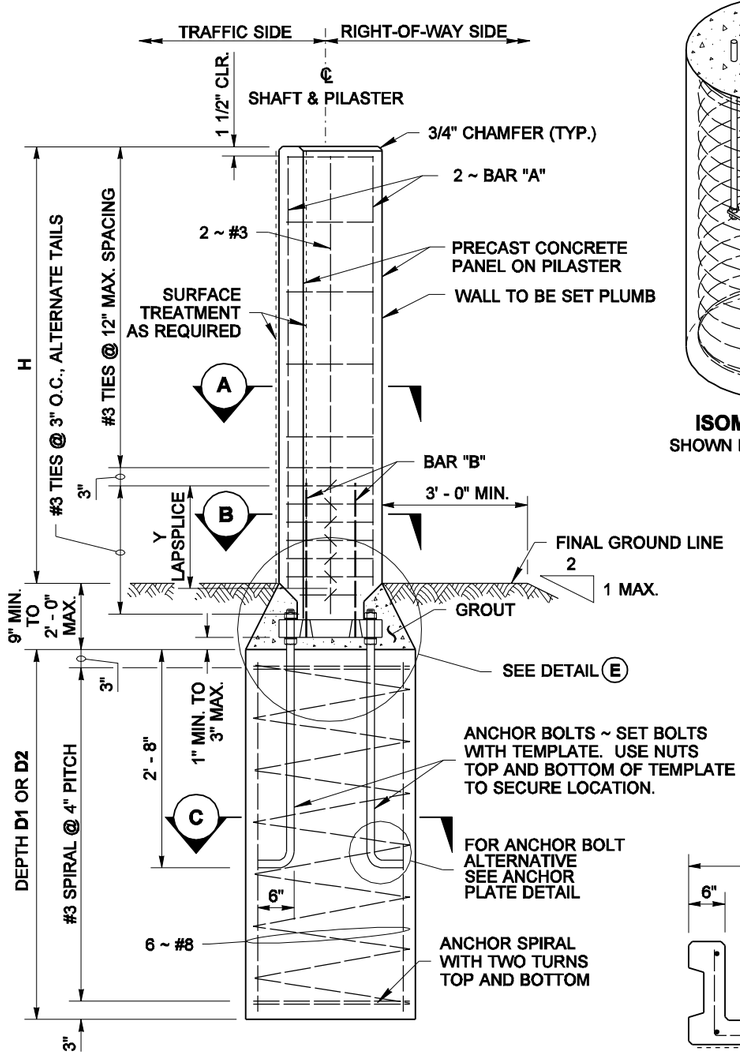

TYPICAL SECTION

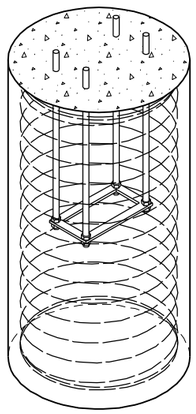

ISOMETRIC VIEW
SHOWN FOR INSTALLATION

BAR "F" ~ #3 @ 12" BOTH DIRECTIONS, OR 6 x 6-W5.5 x W5.5, OR 12 x 12-W9.5 x W6.5, OR W9.5 (D10) HORIZONTAL @ 12" O.C. WITH W6 (D6) VERTICAL @ 12" O.C. OR EQUIVALENT. CENTER HORIZONTAL BAR ON WALL. ALTERNATE VERTICAL BARS AS SHOWN.

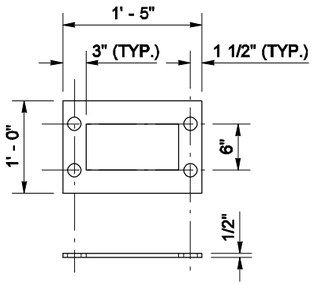

ANCHOR PLATE DETAIL
THREADED ROD WITH NUTS TOP AND BOTTOM

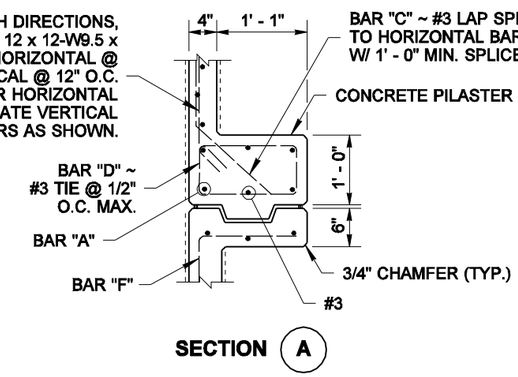

SECTION (A)

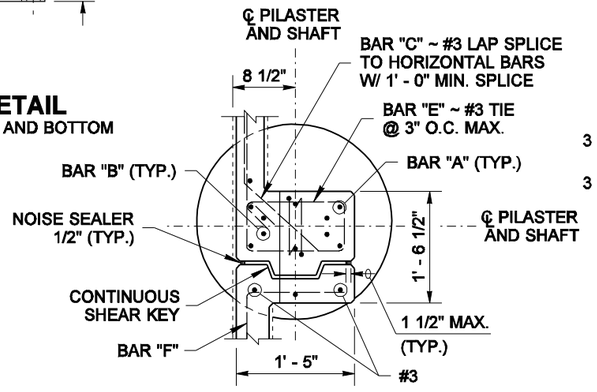

SECTION (B)

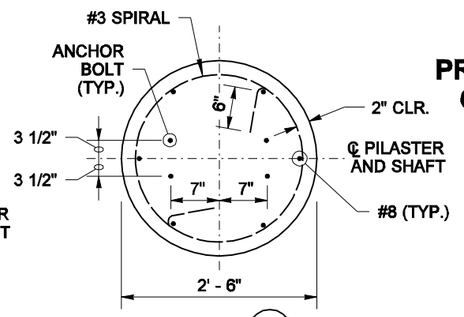

SECTION (C)

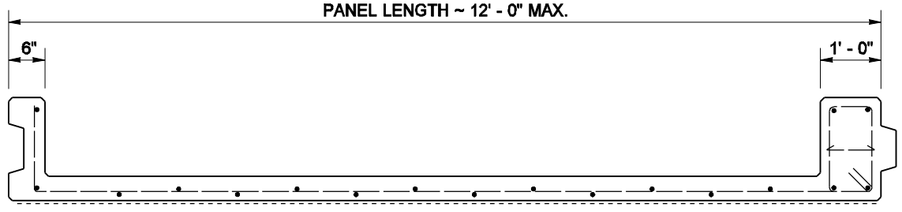

PLAN VIEW

TYPICAL PANEL

WIND EXPOSURE & VELOCITY		
NOISE BARRIER TYPE	WIND EXPOSURE	WIND VELOCITY (MPH)
11A	B1	80
11B	B1	90
11C	B2	80
11D	B2	90

SOIL TYPE	
SOIL TYPE	ANGLE OF INTERNAL FRICTION ϕ (DEGREES)
D1	32
D2	38

NOTES

1. Wall to be designated Noise Barrier Wall Type 11A, 11B, 11C or 11D. The Contract specifies actual wall dimensions.
2. For intermediate wall heights, use the next higher H.
3. Panels shall have at least 3 feet of level ground on each side.
4. The Contract specifies actual foundation requirements D1 or D2.
5. Maximum Panel length shall be 12 feet.

PRECAST CONCRETE WALL ON SHAFT FOUNDATION

BIJAN KHALEGHI
STATE OF WASHINGTON
27695
REGISTERED
PROFESSIONAL ENGINEER

EXPIRES AUGUST 23, 2006

NOTE: THIS PLAN IS NOT A LEGAL ENGINEERING DOCUMENT BUT AN ELECTRONIC DUPLICATE. THE ORIGINAL, SIGNED BY THE ENGINEER AND APPROVED FOR PUBLICATION, IS KEPT ON FILE AT THE WASHINGTON STATE DEPARTMENT OF TRANSPORTATION. A COPY MAY BE OBTAINED UPON REQUEST.

NOISE BARRIER WALL TYPE 11

STANDARD PLAN D-2.36-00

SHEET 1 OF 3 SHEETS

APPROVED FOR PUBLICATION

Harold J. Peterfeso — STATE DESIGN ENGINEER
11-10-05 — DATE

Washington State Department of Transportation

EFFECTIVE: APRIL 2, 2007 TO JANUARY 6, 2008
EFFECTIVE: APRIL 2, 2007 TO JANUARY 6, 2008

EFFECTIVE: APRIL 2, 2007 TO JANUARY 6, 2008

DRAWN BY: ADAM COCHRAN

S	A	T	F
#7	1 21/32"	1 1/2"	1 1/8"
#9	2"	1 3/4"	1 3/8"
#11	2 15/32"	2 1/4"	1 21/32"

BOLT DIAM.	DIAM. "D"	SLOT "G"
1"	1 1/8"	1 1/8" x 2 1/2"
1 1/8"	1 1/4"	1 1/4" x 2 7/8"
1 1/4"	1 3/8"	1 3/8" x 3 1/8"

NOTE:
THE BOTTOM 9" OF BAR "B" SHALL BE PAINTED WITH ONE COAT OF FORMULA A-6-86 ZINC DUST OXIDE PRIMER OR, ONE COAT OF FORMULA A-11-99 PRIMER.

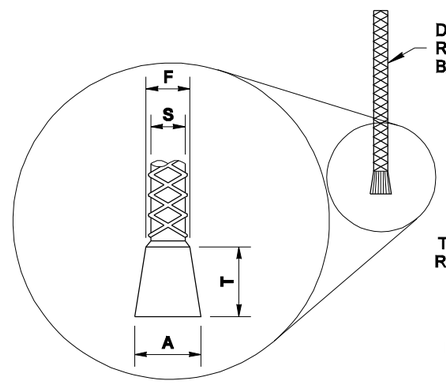

BAR "B"

WEDGE HEAD SHALL BEAR FIRMLY AND UNIFORM AGAINST BASE PLATE. BAR "B" SHALL BE HELD SECURE DURING CONCRETE PLACEMENT TO PREVENT GAPS BETWEEN WEDGE HEAD AND BASE PLATE.

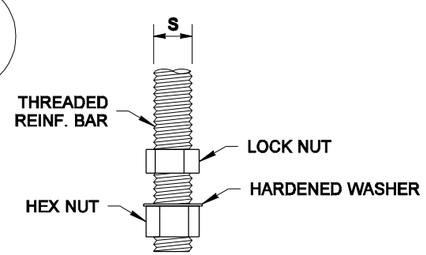

BAR "B"

THREADED BAR OPTION

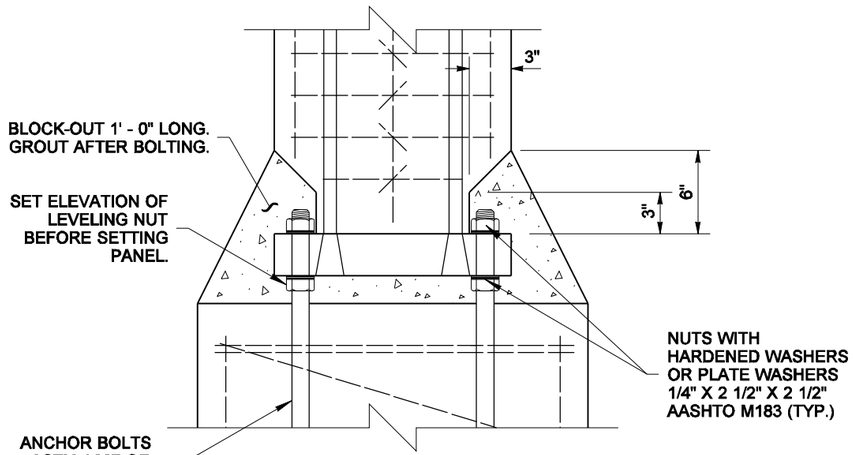

DETAIL E

ANCHOR BOLTS, NUTS, WASHERS, BASE PLATE, AND BAR "B" SHALL HAVE A PROTECTIVE COATING OF ONE OF THE FOLLOWING:
HOT DIPPED GALVANIZING AASHTO M 232 FOR HARDWARE;
AASHTO M 111 FOR WASHERS AND PLATES:
MECHANICAL GALANIZING AASHTO M 298 CL 55, OR
ZINC RICH PAINT, PAINT THREADS AND NUTS AFTER INSTALLATION.

BASE PLATE T x 1' - 0" x 1' - 5"
AASHTO M 183 GALVANIZED.
EMBEDDED WITH GROUT 3/4"
CHAMFER ALL CORNERS.

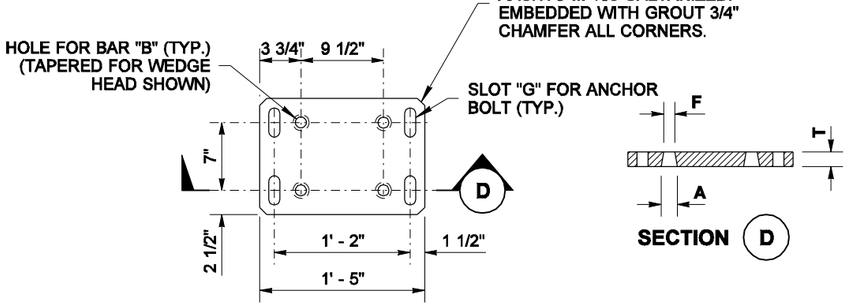

BASE PLATE DETAIL

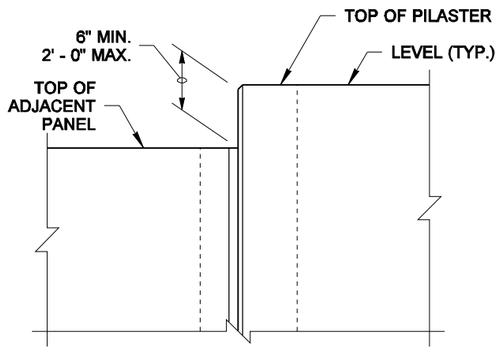

ELEVATION VIEW

STEP DETAIL

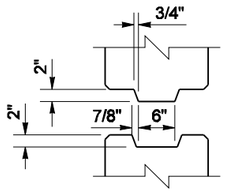

PLAN VIEW

SHEAR-KEY DETAIL

BENDING DIAGRAM

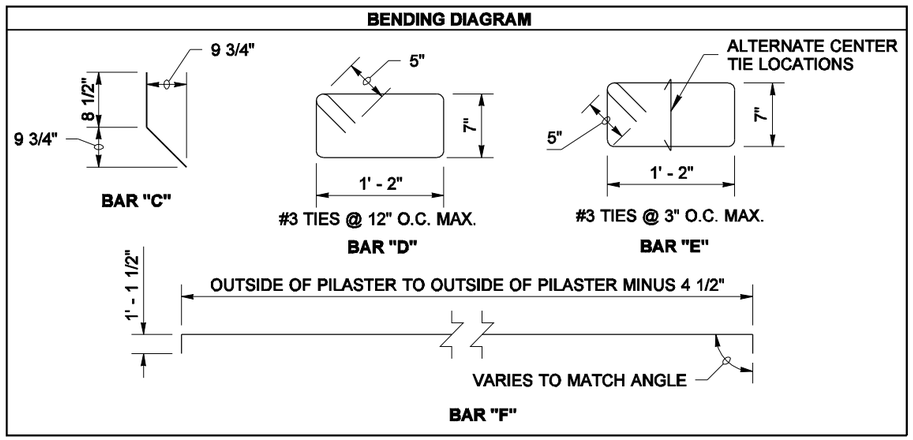

PRECAST CONCRETE WALL ON SHAFT FOUNDATION

BIJAN KHALEGHI
STATE OF WASHINGTON
27695
REGISTERED
PROFESSIONAL ENGINEER

EXPIRES AUGUST 23, 2006

NOTE: THIS PLAN IS NOT A LEGAL ENGINEERING DOCUMENT BUT AN ELECTRONIC DUPLICATE. THE ORIGINAL, SIGNED BY THE ENGINEER AND APPROVED FOR PUBLICATION, IS KEPT ON FILE AT THE WASHINGTON STATE DEPARTMENT OF TRANSPORTATION. A COPY MAY BE OBTAINED UPON REQUEST.

NOISE BARRIER WALL TYPE 11

STANDARD PLAN D-2.36-00

SHEET 2 OF 3 SHEETS

APPROVED FOR PUBLICATION

Harold J. Peterfeso — STATE DESIGN ENGINEER — *11-10-05* — DATE

Washington State Department of Transportation

EFFECTIVE: APRIL 2, 2007 TO JANUARY 6, 2008

EFFECTIVE: APRIL 2, 2007 TO JANUARY 6, 2008

DRAWN BY: ADAM COCHRAN

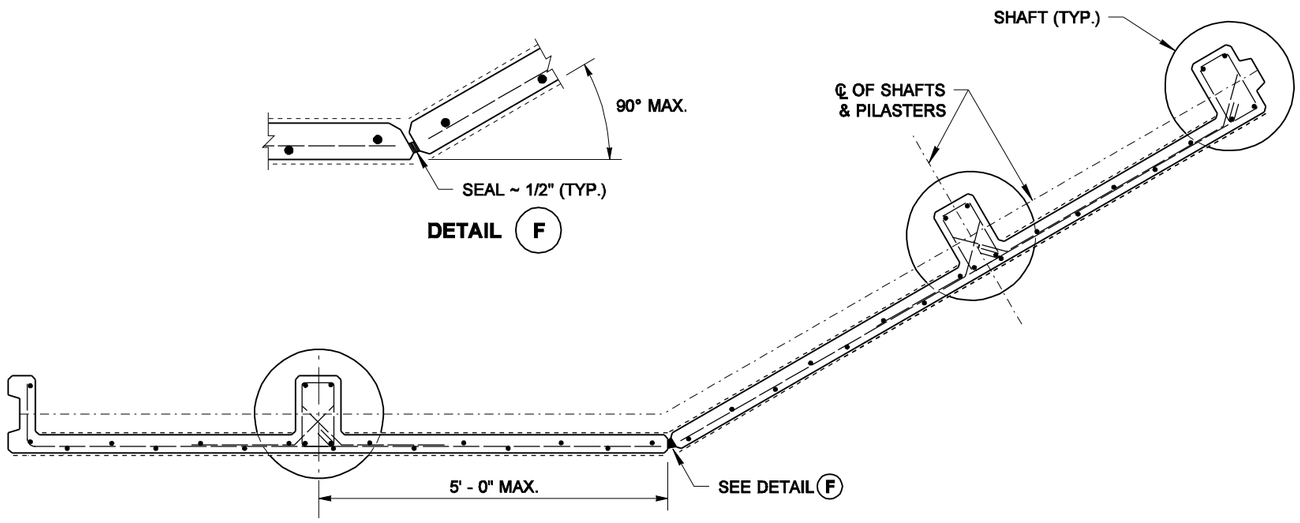

ANGLE POINT ~ CANTILEVERED

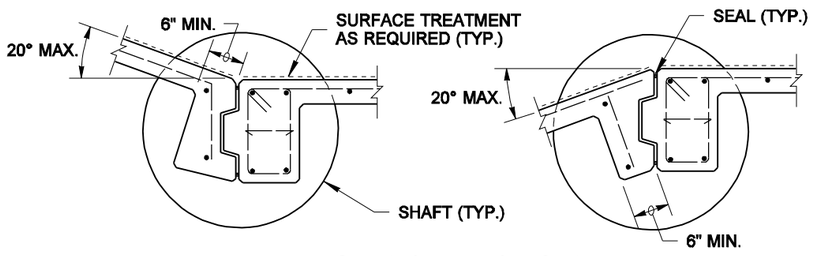

ANGLE POINT ~ ON SHAFT

ANGLE 20° OR LESS

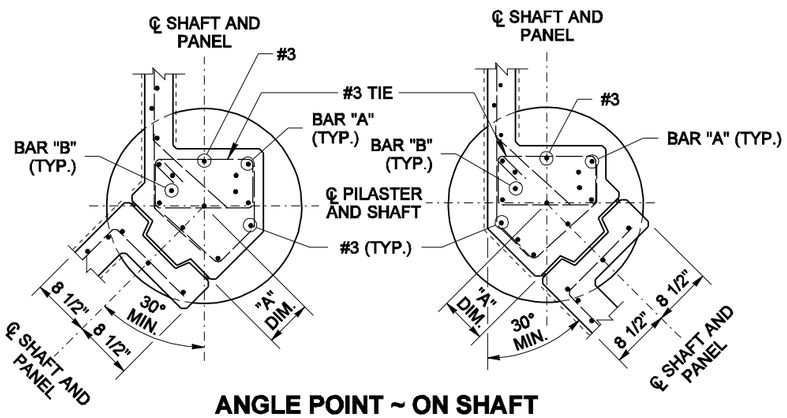

ANGLE POINT ~ ON SHAFT

ANGLE 30° TO 90°

ANGLE (DEGREE)	"A" DIMENSION
30	4 1/2"
40	5 1/2"
50	6 1/2"
60	7 1/4"
70	7 3/4"
80	8"
90	9 1/4"

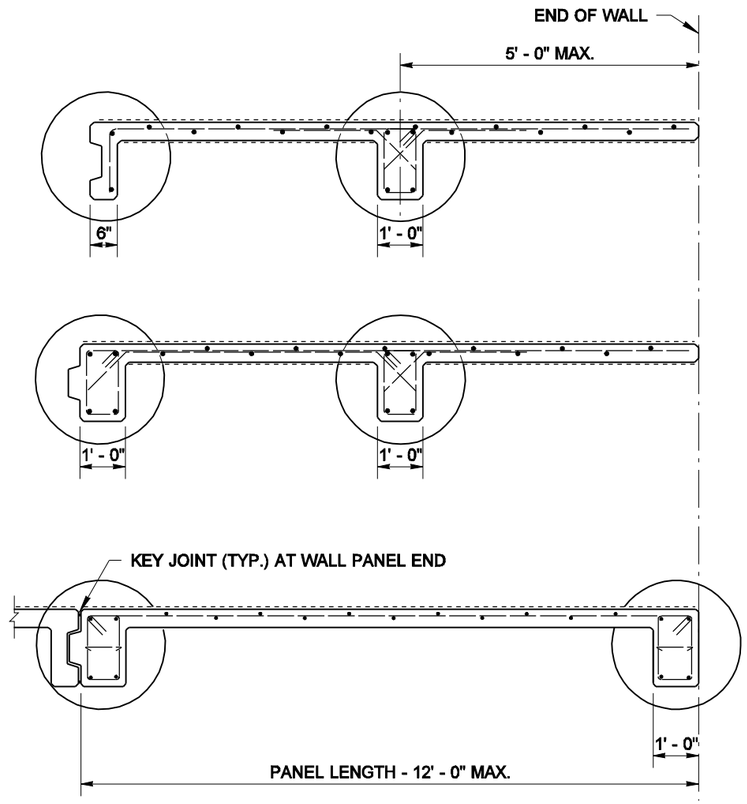

END PANEL OPTIONS

PRECAST CONCRETE WALL ON SHAFT FOUNDATION

BIJAN KHALEGHI
STATE OF WASHINGTON
27695
REGISTERED PROFESSIONAL ENGINEER

EXPIRES AUGUST 23, 2006

NOTE: THIS PLAN IS NOT A LEGAL ENGINEERING DOCUMENT BUT AN ELECTRONIC DUPLICATE. THE ORIGINAL, SIGNED BY THE ENGINEER AND APPROVED FOR PUBLICATION, IS KEPT ON FILE AT THE WASHINGTON STATE DEPARTMENT OF TRANSPORTATION. A COPY MAY BE OBTAINED UPON REQUEST.

NOISE BARRIER WALL TYPE 11

STANDARD PLAN D-2.36-00

SHEET 3 OF 3 SHEETS

APPROVED FOR PUBLICATION

Harold J. Peterfeso — STATE DESIGN ENGINEER — *11-10-05* — DATE

Washington State Department of Transportation

EFFECTIVE: APRIL 2, 2007 TO JANUARY 6, 2008

EFFECTIVE: APRIL 2, 2007 TO JANUARY 6, 2008

EFFECTIVE: APRIL 2, 2007 TO JANUARY 6, 2008

DRAWN BY: ADAM COCHRAN

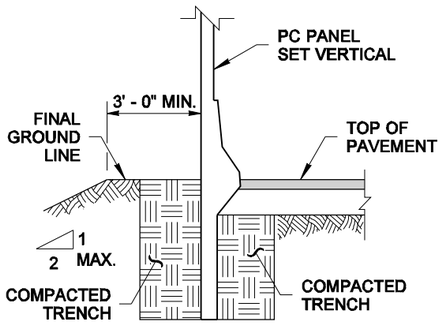

TRENCH FOOTING
SEE NOTE 3

SOIL TYPE	
SOIL TYPE	ANGLE OF INTERNAL FRICTION ϕ (DEGREES)
D1	32
D2	38

WIND EXPOSURE & VELOCITY		
NOISE BARRIER TYPE	WIND EXPOSURE	WIND VELOCITY (MPH)
12A	B1	80
12B	B1	90
12C	B2	80
12D	B2	90

NOTES

1. Wall to be designated Noise Barrier Wall Type 12A, 12B, 12C and 12D. The Contract specifies actual wall designation.
2. For intermediate wall heights, use the next higher H.
3. Compaction of trench height differential shall not exceed 1 foot.
4. Panels shall have at least 3 feet of level ground on each side.
5. All joints shall be in full contact and sealed.
6. The Contract specifies actual foundation requirements D1 or D2.

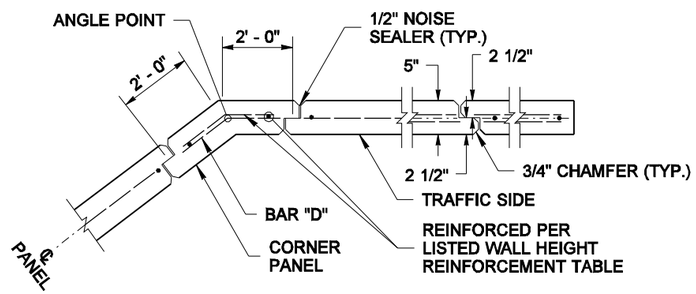

JOINT AND CORNER DETAIL

WALL HT H	TYPE 12A		TYPE 12B		TYPE 12C		TYPE 12D		WALL HT H
	BAR "B"	BAR "D"	BAR "B"	BAR "D"	BAR "B"	BAR "D"	BAR "B"	BAR "D"	
6' - 0"	#6 @ 12"	#4 @ 15"	#6 @ 12"	#4 @ 15"	#6 @ 12"	#4 @ 15"	#6 @ 12"	#4 @ 15"	6' - 0"
8' - 0"	#6 @ 12"	#4 @ 15"	#6 @ 12"	#4 @ 15"	#6 @ 12"	#4 @ 15"	#6 @ 12"	#4 @ 15"	8' - 0"
10' - 0"	#6 @ 12"	#4 @ 15"	#6 @ 12"	#4 @ 15"	#6 @ 12"	#4 @ 15"	#6 @ 12"	#4 @ 15"	10' - 0"
12' - 0"	#6 @ 12"	#4 @ 15"	#6 @ 12"	#4 @ 15"	#6 @ 12"	#4 @ 15"	#6 @ 12"	#4 @ 12"	12' - 0"
14' - 0"	#6 @ 12"	#4 @ 15"	#6 @ 12"	#4 @ 11"	#6 @ 12"	#4 @ 11"	#6 @ 12"	#4 @ 15"	14' - 0"
16' - 0"	#6 @ 12"	#4 @ 10"	#6 @ 12"	#4 @ 10"	#6 @ 12"	#4 @ 10"	#6 @ 12"	#5 @ 12"	16' - 0"
18' - 0"	#6 @ 12"	#4 @ 10"	#6 @ 12"	#4 @ 10"	#6 @ 12"	#5 @ 12"	#6 @ 9"	#5 @ 9"	18' - 0"

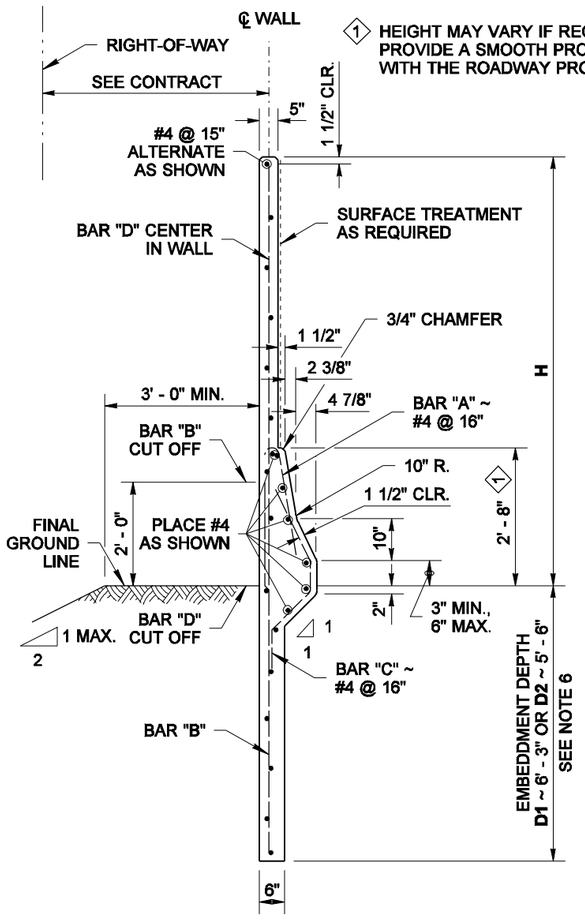

TYPICAL SECTION

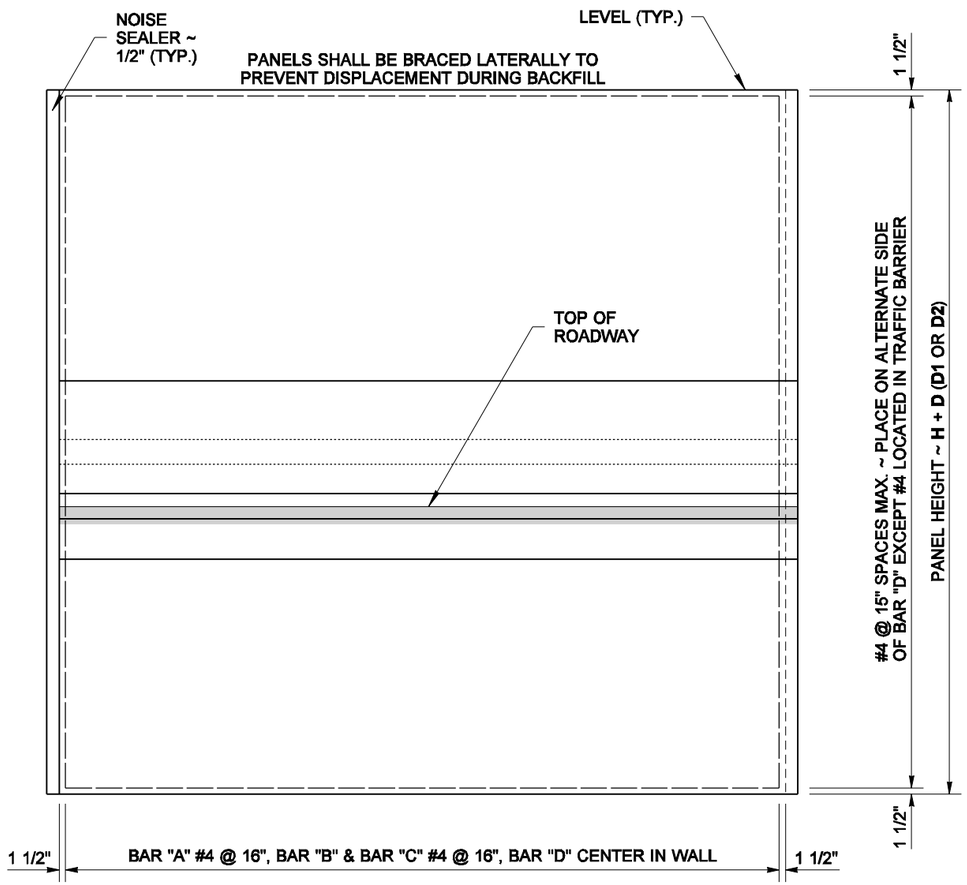

ELEVATION

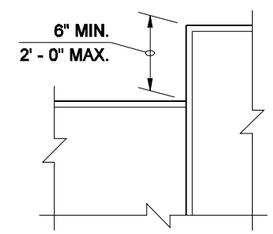

STEP IN PANEL TOP

BENDING DIAGRAM

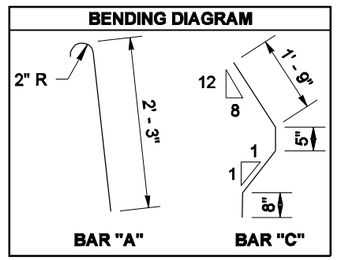

PRECAST CONCRETE WALL W/ TRAFFIC BARRIER ON TRENCH FOOTING

BIJAN KHALEGHI
STATE OF WASHINGTON
27695
REGISTERED
PROFESSIONAL ENGINEER
EXPIRES AUGUST 23, 2006

NOTE: THIS PLAN IS NOT A LEGAL ENGINEERING DOCUMENT BUT AN ELECTRONIC DUPLICATE. THE ORIGINAL, SIGNED BY THE ENGINEER AND APPROVED FOR PUBLICATION, IS KEPT ON FILE AT THE WASHINGTON STATE DEPARTMENT OF TRANSPORTATION. A COPY MAY BE OBTAINED UPON REQUEST.

NOISE BARRIER WALL TYPE 12

STANDARD PLAN D-2.38-00

SHEET 1 OF 1 SHEET

APPROVED FOR PUBLICATION

Harold J. Peterfeso — STATE DESIGN ENGINEER — *11-10-05* — DATE

Washington State Department of Transportation

EFFECTIVE: APRIL 2, 2007 TO JANUARY 6, 2008

EFFECTIVE: APRIL 2, 2007 TO JANUARY 6, 2008

EFFECTIVE: APRIL 2, 2007 TO JANUARY 6, 2008
EFFECTIVE: APRIL 2, 2007 TO JANUARY 6, 2008

DRAWN BY: ADAM COCHRAN

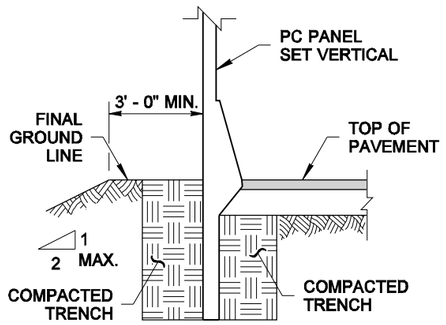

TRENCH FOOTING
SEE NOTE 3

SOIL TYPE	
SOIL TYPE	ANGLE OF INTERNAL FRICTION ϕ (DEGREES)
D1	32
D2	38

WIND EXPOSURE & VELOCITY		
NOISE BARRIER TYPE	WIND EXPOSURE	WIND VELOCITY (MPH)
12SSA	B1	80
12SSB	B1	90
12SSC	B2	80
12SSD	B2	90

NOTES

1. Wall to be designated Noise Barrier Wall Type 12SSA, 12SSB, 12SSC and 12SSD. The Contract specifies actual wall designation.
2. For intermediate wall heights, use the next higher H.
3. Compaction of trench height differential shall not exceed 1 foot.
4. Panels shall have at least 3 feet of level ground on each side.
5. All joints shall be in full contact and sealed.
6. The Contract specifies actual foundation requirements D1 or D2.

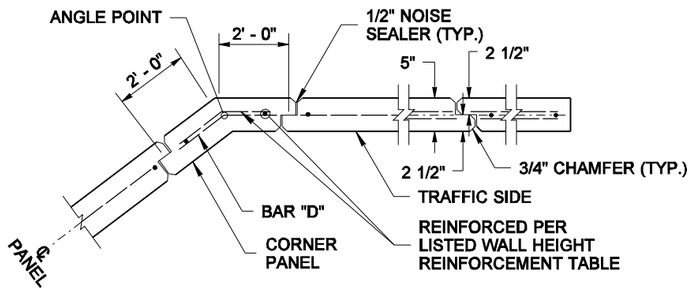

JOINT AND CORNER DETAIL

WALL HT H	TYPE 12SSA		TYPE 12SSB		TYPE 12SSC		TYPE 12SSD		WALL HT H
	BAR "B"	BAR "D"	BAR "B"	BAR "D"	BAR "B"	BAR "D"	BAR "B"	BAR "D"	
6' - 0"	#6 @ 12"	#4 @ 15"	#6 @ 12"	#4 @ 15"	#6 @ 12"	#4 @ 15"	#6 @ 12"	#4 @ 15"	6' - 0"
8' - 0"	#6 @ 12"	#4 @ 15"	#6 @ 12"	#4 @ 15"	#6 @ 12"	#4 @ 15"	#6 @ 12"	#4 @ 15"	8' - 0"
10' - 0"	#6 @ 12"	#4 @ 15"	#6 @ 12"	#4 @ 15"	#6 @ 12"	#4 @ 15"	#6 @ 12"	#4 @ 15"	10' - 0"
12' - 0"	#6 @ 12"	#4 @ 15"	#6 @ 12"	#4 @ 15"	#6 @ 12"	#4 @ 15"	#6 @ 12"	#4 @ 12"	12' - 0"
14' - 0"	#6 @ 12"	#4 @ 15"	#6 @ 12"	#4 @ 11"	#6 @ 12"	#4 @ 11"	#6 @ 12"	#4 @ 15"	14' - 0"
16' - 0"	#6 @ 12"	#4 @ 10"	#6 @ 12"	#4 @ 10"	#6 @ 12"	#4 @ 10"	#6 @ 12"	#5 @ 12"	16' - 0"
18' - 0"	#6 @ 12"	#4 @ 10"	#6 @ 12"	#4 @ 10"	#6 @ 12"	#5 @ 12"	#6 @ 9"	#5 @ 9"	18' - 0"

① HEIGHT MAY VARY IF REQUIRED TO PROVIDE A SMOOTH PROFILE CONSISTENT WITH THE ROADWAY PROFILE

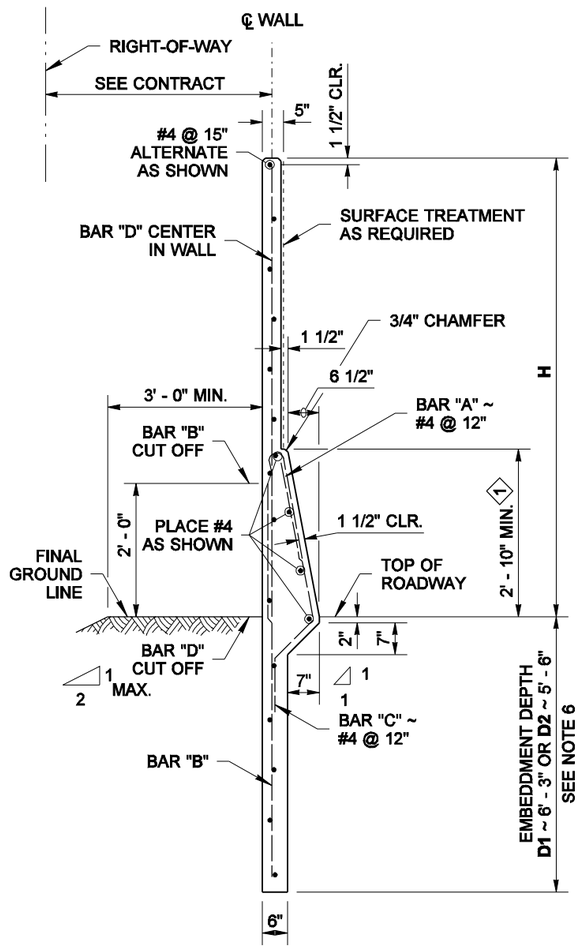

TYPICAL SECTION

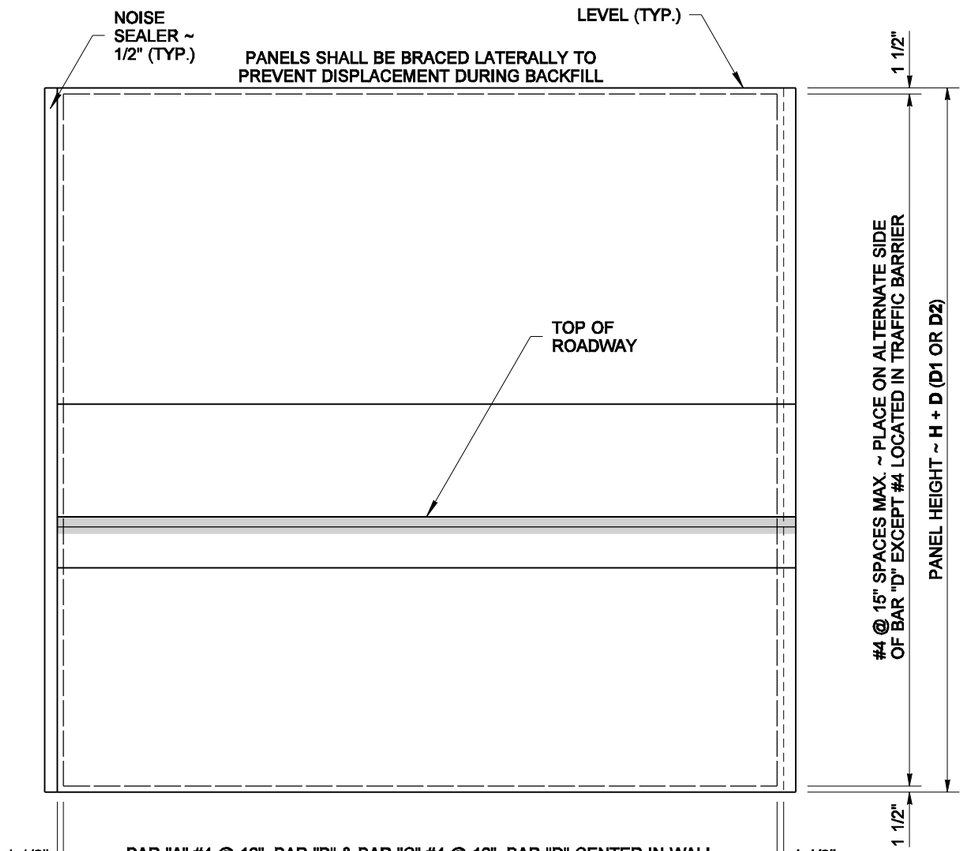

ELEVATION

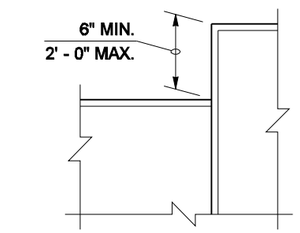

STEP IN PANEL TOP

BENDING DIAGRAM

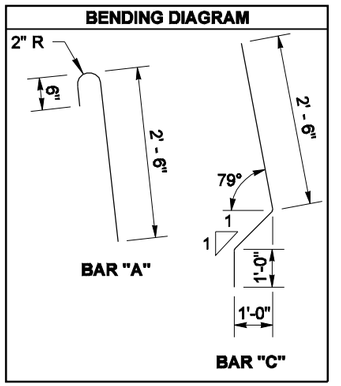

PRECAST CONCRETE WALL W/ SINGLE SLOPE TRAFFIC BARRIER ON TRENCH FOOTING

BIJAN KHALEGHI
STATE OF WASHINGTON
27695
REGISTERED
PROFESSIONAL ENGINEER

EXPIRES AUGUST 23, 2006

NOTE: THIS PLAN IS NOT A LEGAL ENGINEERING DOCUMENT BUT AN ELECTRONIC DUPLICATE. THE ORIGINAL, SIGNED BY THE ENGINEER AND APPROVED FOR PUBLICATION, IS KEPT ON FILE AT THE WASHINGTON STATE DEPARTMENT OF TRANSPORTATION. A COPY MAY BE OBTAINED UPON REQUEST.

NOISE BARRIER WALL TYPE 12SS

STANDARD PLAN D-2.40-00

SHEET 1 OF 1 SHEET

APPROVED FOR PUBLICATION

Harold J. Peterfeso — STATE DESIGN ENGINEER
11-10-05 — DATE

Washington State Department of Transportation

EFFECTIVE: APRIL 2, 2007 TO JANUARY 6, 2008
EFFECTIVE: APRIL 2, 2007 TO JANUARY 6, 2008

EFFECTIVE: APRIL 2, 2007 TO JANUARY 6, 2008

DRAWN BY: ADAM COCHRAN

WALL HT H	TYPE 13A						TYPE 13B						TYPE 13C						TYPE 13D						WALL HT H
	W	X	BARS "B"&"C"	BAR "E"	BAR "D"	BAR "J"	W	X	BARS "B"&"C"	BAR "E"	BAR "D"	BAR "J"	W	X	BARS "B"&"C"	BAR "E"	BAR "D"	BAR "J"	W	X	BARS "B"&"C"	BAR "E"	BAR "D"	BAR "J"	
6' - 0"	5' - 6"	1"	#4 @ 15"	#4 @ 15"	#3 @ 15"	#5 @ 15"	5' - 6"	1"	#4 @ 15"	#4 @ 15"	#3 @ 15"	#5 @ 15"	5' - 6"	1"	#4 @ 15"	#4 @ 15"	#3 @ 15"	#5 @ 15"	5' - 6"	1"	#4 @ 15"	#4 @ 15"	#3 @ 15"	#5 @ 15"	6' - 0"
8' - 0"	5' - 3"	1"	#4 @ 15"	#4 @ 15"	#3 @ 15"	#5 @ 15"	5' - 3"	1"	#4 @ 15"	#4 @ 15"	#3 @ 15"	#5 @ 15"	5' - 3"	1"	#4 @ 15"	#4 @ 15"	#3 @ 15"	#5 @ 15"	5' - 3"	1"	#4 @ 15"	#4 @ 15"	#3 @ 15"	#5 @ 15"	8' - 0"
10' - 0"	5' - 3"	1"	#4 @ 15"	#4 @ 15"	#3 @ 15"	#5 @ 15"	5' - 3"	1"	#4 @ 15"	#4 @ 15"	#3 @ 15"	#5 @ 15"	5' - 3"	1"	#4 @ 15"	#4 @ 15"	#3 @ 15"	#5 @ 15"	5' - 3"	1"	#4 @ 12"	#4 @ 12"	#3 @ 12"	#5 @ 12"	10' - 0"
12' - 0"	5' - 0"	1"	#4 @ 15"	#4 @ 15"	#3 @ 15"	#5 @ 15"	5' - 0"	1"	#4 @ 10"	#4 @ 10"	#3 @ 10"	#5 @ 10"	5' - 0"	1"	#4 @ 12"	#4 @ 12"	#3 @ 12"	#5 @ 15"	5' - 0"	1"	#4 @ 12"	#5 @ 12"	#4 @ 12"	#5 @ 12"	12' - 0"
14' - 0"	4' - 9"	1"	#4 @ 11"	#4 @ 11"	#3 @ 11"	#5 @ 11"	5' - 0"	1"	#4 @ 12"	#5 @ 12"	#4 @ 12"	#5 @ 12"	4' - 9"	1"	#4 @ 12"	#5 @ 12"	#4 @ 12"	#5 @ 11"	5' - 3"	10"	#4 @ 10"	#5 @ 10"	#4 @ 10"	#5 @ 10"	14' - 0"
16' - 0"	5' - 0"	10"	#4 @ 12"	#5 @ 12"	#4 @ 12"	#5 @ 12"	5' - 0"	10"	#4 @ 10"	#5 @ 10"	#4 @ 10"	#5 @ 10"	5' - 0"	10"	#4 @ 10"	#5 @ 10"	#4 @ 10"	#5 @ 12"	5' - 6"	1' - 6"	#4 @ 13"	#5 @ 13"	#5 @ 13"	#5 @ 13"	16' - 0"
18' - 0"	5' - 0"	10"	#4 @ 10"	#5 @ 10"	#4 @ 10"	#5 @ 10"	5' - 3"	1' - 6"	#4 @ 12"	#5 @ 12"	#5 @ 12"	#5 @ 12"	5' - 0"	1' - 0"	#4 @ 10"	#5 @ 10"	#4 @ 10"	#5 @ 10"	5' - 9"	1 - 9"	#4 @ 9"	#5 @ 9"	#5 @ 9"	#5 @ 9"	18' - 0"

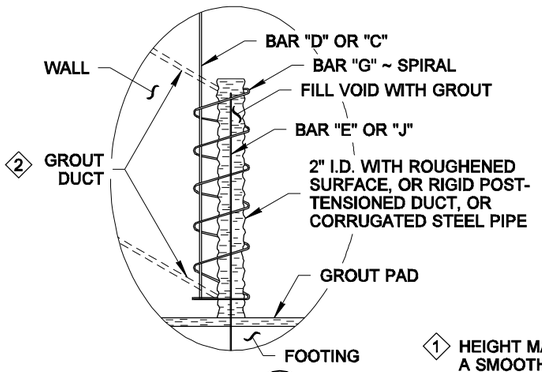

DETAIL (A)

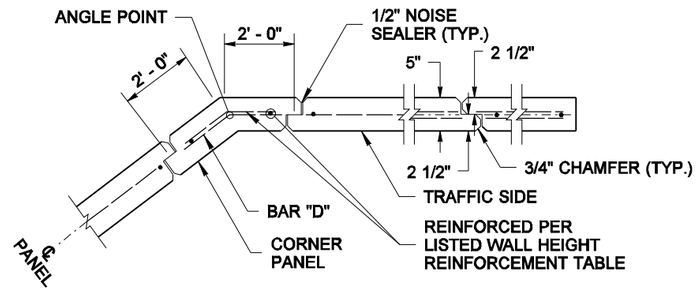

JOINT AND CORNER DETAIL

WIND EXPOSURE & VELOCITY		
NOISE BARRIER TYPE	WIND EXPOSURE	WIND VELOCITY (MPH)
13A	B1	80
13B	B1	90
13C	B2	80
13D	B2	90

NOTES

1. Wall to be designated Noise Barrier Wall Type 13A, 13B, 13C or 13D. The Contract specifies actual wall designations.
2. For intermediate wall heights, use the next higher H.
3. Panels shall have at least 3 feet of level ground on each side.
4. Construction joints in the footing shall be spaced at 120 feet max.
5. All joints shall be in full contact and sealed.
6. The Contract specifies actual foundation requirements D1 or D2.

BENDING DIAGRAM

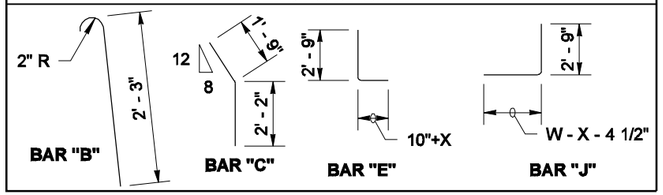

1. HEIGHT MAY VARY IF REQUIRED TO PROVIDE A SMOOTH PROFILE CONSISTENT WITH THE ROADWAY PROFILE
2. FILL THE JOINT HOLE WITH GROUT USING DUCTS. DUCTS SHALL BE LOCATED ON PANEL FACE OPPOSITE TRAFFIC

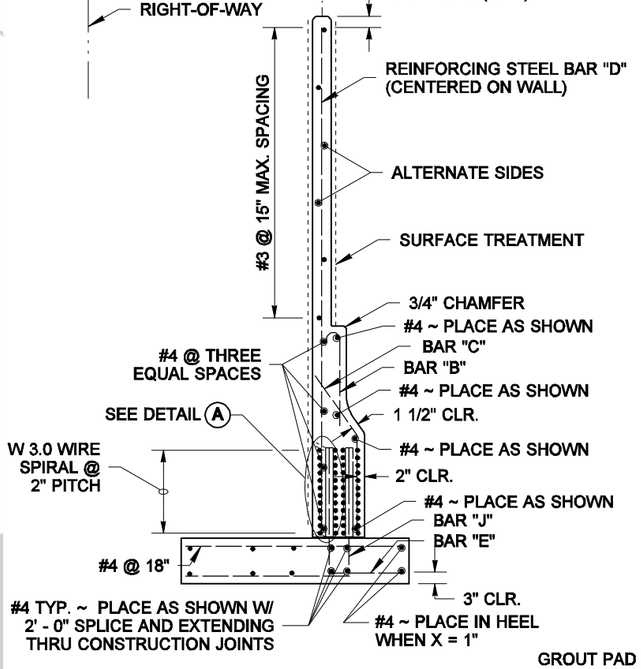

REINFORCEMENT SECTION

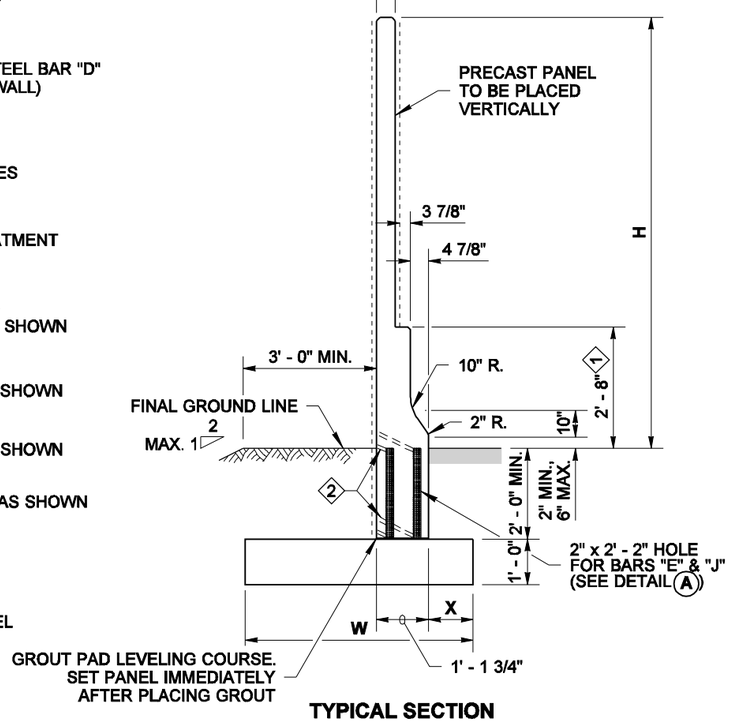

TYPICAL SECTION

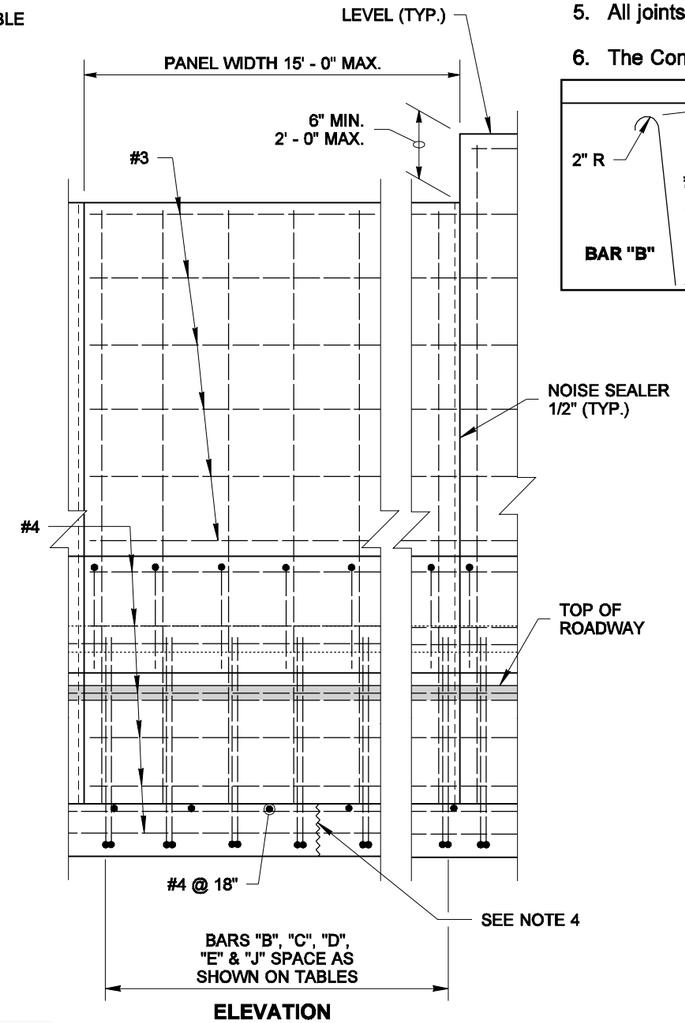

ELEVATION

PRECAST CONCRETE WALL W/ TRAFFIC BARRIER ON SPREAD FOOTING

BIJAN KHALEGHI
STATE OF WASHINGTON
27695
REGISTERED
PROFESSIONAL ENGINEER
EXPIRES AUGUST 23, 2006

NOTE: THIS PLAN IS NOT A LEGAL ENGINEERING DOCUMENT BUT AN ELECTRONIC DUPLICATE. THE ORIGINAL, SIGNED BY THE ENGINEER AND APPROVED FOR PUBLICATION, IS KEPT ON FILE AT THE WASHINGTON STATE DEPARTMENT OF TRANSPORTATION. A COPY MAY BE OBTAINED UPON REQUEST.

NOISE BARRIER WALL TYPE 13

STANDARD PLAN D-2.42-00

SHEET 1 OF 1 SHEET

APPROVED FOR PUBLICATION

Harold J. Peterfeso — STATE DESIGN ENGINEER — *11-10-05* — DATE

Washington State Department of Transportation

EFFECTIVE: APRIL 2, 2007 TO JANUARY 6, 2008

EFFECTIVE: APRIL 2, 2007 TO JANUARY 6, 2008

DRAWN BY: ADAM COCHRAN

WALL HT H	TYPE 13SSA						TYPE 13SSB						TYPE 13SSC						TYPE 13SSD						WALL HT H
	W	X	BARS "B"&"C"	BAR "E"	BAR "D"	BAR "J"	W	X	BARS "B"&"C"	BAR "E"	BAR "D"	BAR "J"	W	X	BARS "B"&"C"	BAR "E"	BAR "D"	BAR "J"	W	X	BARS "B"&"C"	BAR "E"	BAR "D"	BAR "J"	
6' - 0"	5' - 6"	1"	#4 @ 15"	#4 @ 15"	#3 @ 15"	#5 @ 15"	5' - 6"	1"	#4 @ 15"	#4 @ 15"	#3 @ 15"	#5 @ 15"	5' - 6"	1"	#4 @ 15"	#4 @ 15"	#3 @ 15"	#5 @ 15"	5' - 6"	1"	#4 @ 15"	#4 @ 15"	#3 @ 15"	#5 @ 15"	6' - 0"
8' - 0"	5' - 3"	1"	#4 @ 15"	#4 @ 15"	#3 @ 15"	#5 @ 15"	5' - 3"	1"	#4 @ 15"	#4 @ 15"	#3 @ 15"	#5 @ 15"	5' - 3"	1"	#4 @ 15"	#4 @ 15"	#3 @ 15"	#5 @ 15"	5' - 3"	1"	#4 @ 15"	#4 @ 15"	#3 @ 15"	#5 @ 15"	8' - 0"
10' - 0"	5' - 3"	1"	#4 @ 15"	#4 @ 15"	#3 @ 15"	#5 @ 15"	5' - 3"	1"	#4 @ 15"	#4 @ 15"	#3 @ 15"	#5 @ 15"	5' - 3"	1"	#4 @ 15"	#4 @ 15"	#3 @ 15"	#5 @ 15"	5' - 3"	1"	#4 @ 12"	#4 @ 12"	#3 @ 12"	#5 @ 12"	10' - 0"
12' - 0"	5' - 0"	1"	#4 @ 15"	#4 @ 15"	#3 @ 15"	#5 @ 15"	5' - 0"	1"	#4 @ 10"	#4 @ 10"	#3 @ 10"	#5 @ 10"	5' - 0"	1"	#4 @ 12"	#4 @ 12"	#3 @ 12"	#5 @ 15"	5' - 0"	1"	#4 @ 12"	#5 @ 12"	#4 @ 12"	#5 @ 12"	12' - 0"
14' - 0"	4' - 9"	1"	#4 @ 11"	#4 @ 11"	#3 @ 11"	#5 @ 11"	5' - 0"	1"	#4 @ 12"	#5 @ 12"	#4 @ 12"	#5 @ 12"	4' - 9"	1"	#4 @ 12"	#5 @ 12"	#4 @ 12"	#5 @ 11"	5' - 3"	10"	#4 @ 10"	#5 @ 10"	#4 @ 10"	#5 @ 10"	14' - 0"
16' - 0"	5' - 0"	10"	#4 @ 12"	#5 @ 12"	#4 @ 12"	#5 @ 12"	5' - 0"	10"	#4 @ 10"	#5 @ 10"	#4 @ 10"	#5 @ 10"	5' - 0"	10"	#4 @ 10"	#5 @ 10"	#4 @ 10"	#5 @ 12"	5' - 6"	1' - 6"	#4 @ 13"	#5 @ 13"	#5 @ 13"	#5 @ 13"	16' - 0"
18' - 0"	5' - 0"	10"	#4 @ 10"	#5 @ 10"	#4 @ 10"	#5 @ 10"	5' - 3"	1' - 6"	#4 @ 12"	#5 @ 12"	#5 @ 12"	#5 @ 12"	5' - 0"	1' - 0"	#4 @ 10"	#5 @ 10"	#4 @ 10"	#5 @ 10"	5' - 9"	1 - 9"	#4 @ 9"	#5 @ 9"	#5 @ 9"	#5 @ 9"	18' - 0"

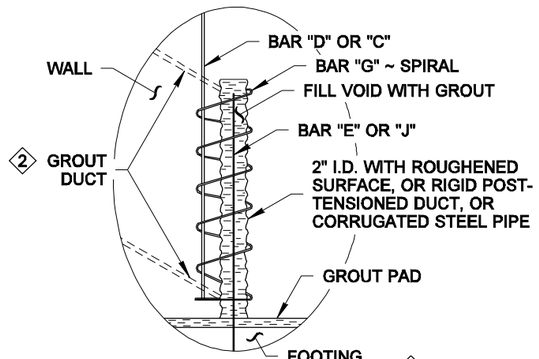

DETAIL (A)

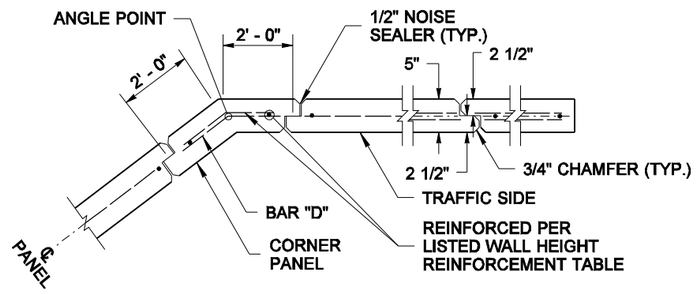

JOINT AND CORNER DETAIL

WIND EXPOSURE & VELOCITY		
NOISE BARRIER TYPE	WIND EXPOSURE	WIND VELOCITY (MPH)
13SSA	B1	80
13SSB	B1	90
13SSC	B2	80
13SSD	B2	90

NOTES

1. Wall to be designated Noise Barrier Wall Type 13SSA, 13SSB, 13SSC or 13SSD. The Contract specifies actual wall designations.
2. For intermediate wall heights, use the next higher H.
3. Panels shall have at least 3 feet of level ground on each side.
4. Construction joints in the footing shall be spaced at 120 feet maximum.
5. All joints shall be in full contact and sealed.
6. The Contract specifies actual foundation requirements D1 or D2.

BENDING DIAGRAM

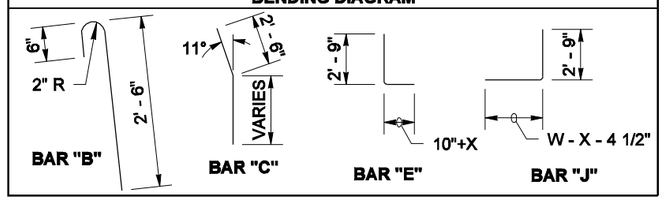

1. HEIGHT MAY VARY IF REQUIRED TO PROVIDE A SMOOTH PROFILE CONSISTENT WITH THE ROADWAY PROFILE
2. FILL THE JOINT HOLE WITH GROUT USING DUCTS. DUCTS SHALL BE LOCATED ON PANEL FACE OPPOSITE TRAFFIC

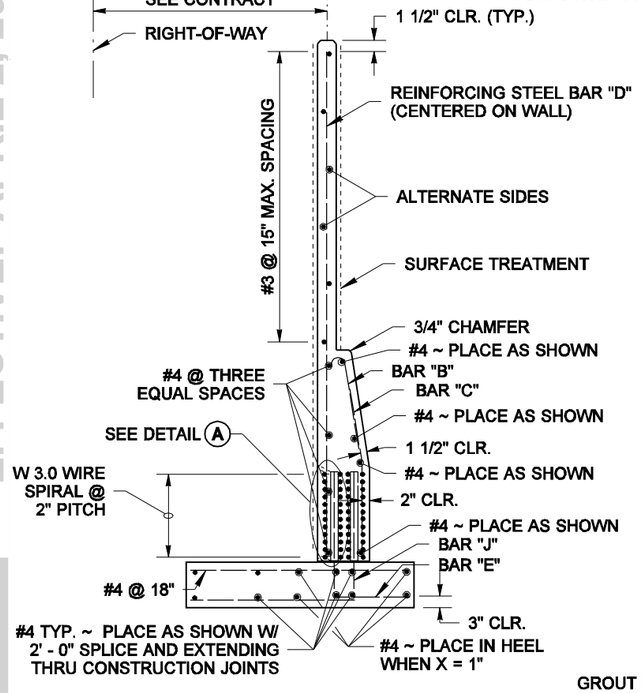

REINFORCEMENT SECTION

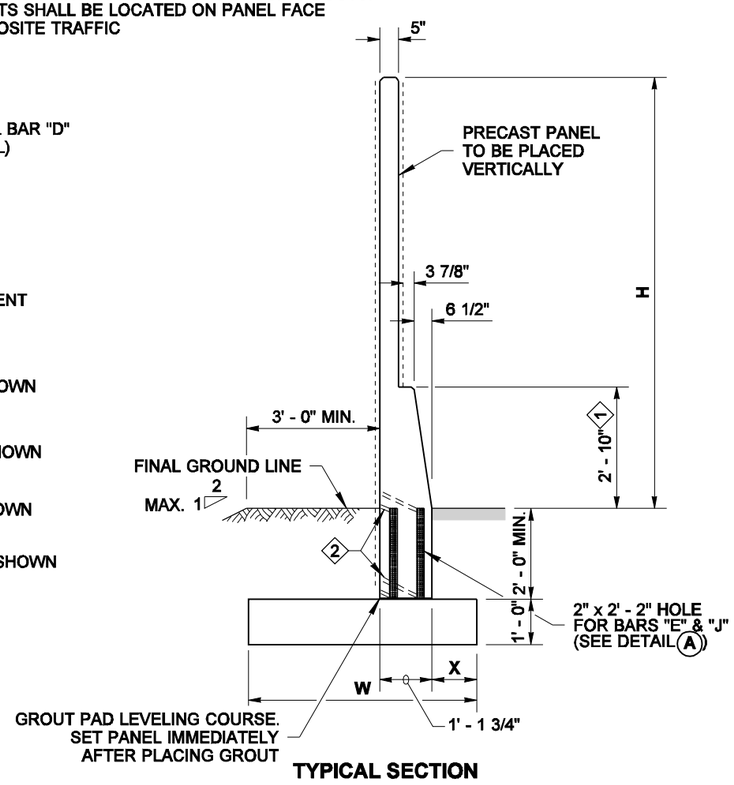

TYPICAL SECTION

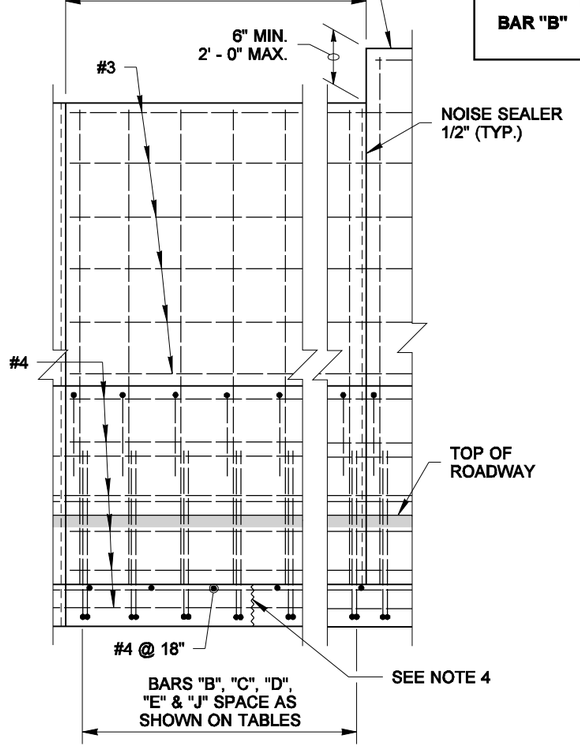

ELEVATION

PRECAST CONCRETE WALL W/ SINGLE SLOPE TRAFFIC BARRIER ON SPREAD FOOTING

BIJAN KHALEGHI
STATE OF WASHINGTON
27695
REGISTERED
PROFESSIONAL ENGINEER

EXPIRES AUGUST 23, 2006

NOTE: THIS PLAN IS NOT A LEGAL ENGINEERING DOCUMENT BUT AN ELECTRONIC DUPLICATE. THE ORIGINAL, SIGNED BY THE ENGINEER AND APPROVED FOR PUBLICATION, IS KEPT ON FILE AT THE WASHINGTON STATE DEPARTMENT OF TRANSPORTATION. A COPY MAY BE OBTAINED UPON REQUEST.

NOISE BARRIER WALL TYPE 13SS

STANDARD PLAN D-2.44-00

SHEET 1 OF 1 SHEET

APPROVED FOR PUBLICATION

Harold J. Peterfeso — STATE DESIGN ENGINEER — *11-10-05* — DATE

Washington State Department of Transportation

EFFECTIVE: APRIL 2, 2007 TO JANUARY 6, 2008

EFFECTIVE: APRIL 2, 2007 TO JANUARY 6, 2008

DRAWN BY: ADAM COCHRAN

WALL HT H	TYPE 14A BAR "A"	TYPE 14B BAR "A"	TYPE 14C BAR "A"	TYPE 14D BAR "A"	WALL HT H
6' - 0"	#4 @ 15"	#4 @ 15"	#4 @ 15"	#4 @ 15"	6' - 0"
8' - 0"	#4 @ 15"	#4 @ 15"	#4 @ 15"	#4 @ 15"	8' - 0"
10' - 0"	#4 @ 15"	#4 @ 15"	#4 @ 15"	#4 @ 15"	10' - 0"
12' - 0"	#4 @ 15"	#4 @ 15"	#4 @ 15"	#4 @ 15"	12' - 0"
14' - 0"	#4 @ 15"	#4 @ 11"	#4 @ 15"	#4 @ 10"	14' - 0"
16' - 0"	#4 @ 10"	#4 @ 10"	#4 @ 10"	#5 @ 12"	16' - 0"
18' - 0"	#4 @ 10"	#5 @ 12"	#4 @ 10"	#5 @ 12"	18' - 0"

BENDING DIAGRAM

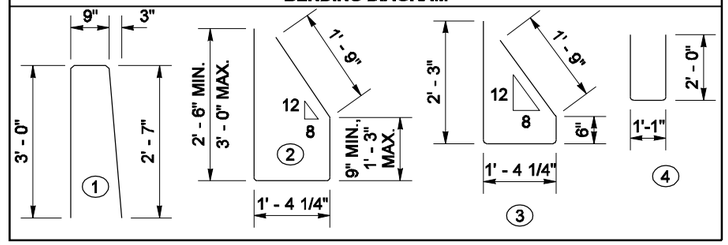

WIND EXPOSURE & VELOCITY		
NOISE BARRIER TYPE	WIND EXPOSURE	WIND VELOCITY (MPH)
14A	B1	80
14B	B1	90
14C	B2	80
14D	B2	90

NOTES

1. Wall to be designated Noise Barrier Wall Type 14A, 14B, 14C or 14D. The Contract specifies actual wall designations.
2. For intermediate wall heights, use the next higher H.
3. Panels shall have at least 3 feet level ground on each side.
4. All joints shall be in full contact and sealed.
5. Anchor Bolts, Nuts, Washers, Base Plate, and Bar "B" shall have a Protective Coating of one of the following: Hot Dipped Galvanizing AASHTO M 232 for Hardware; AASHTO M 111 for Washers and Plates: Mechanical Galvanizing AASHTO M 298 CL 55, or Zinc Rich Paint, Paint threads and nuts after installation.
6. The bottom 9" of Bar "B" shall be painted with one coat of Formula A-6-86 Zinc Dust Oxide Primer OR, one coat of Formula A-11-99 Primer.
7. The Contract specifies actual foundation requirements D1 or D2.

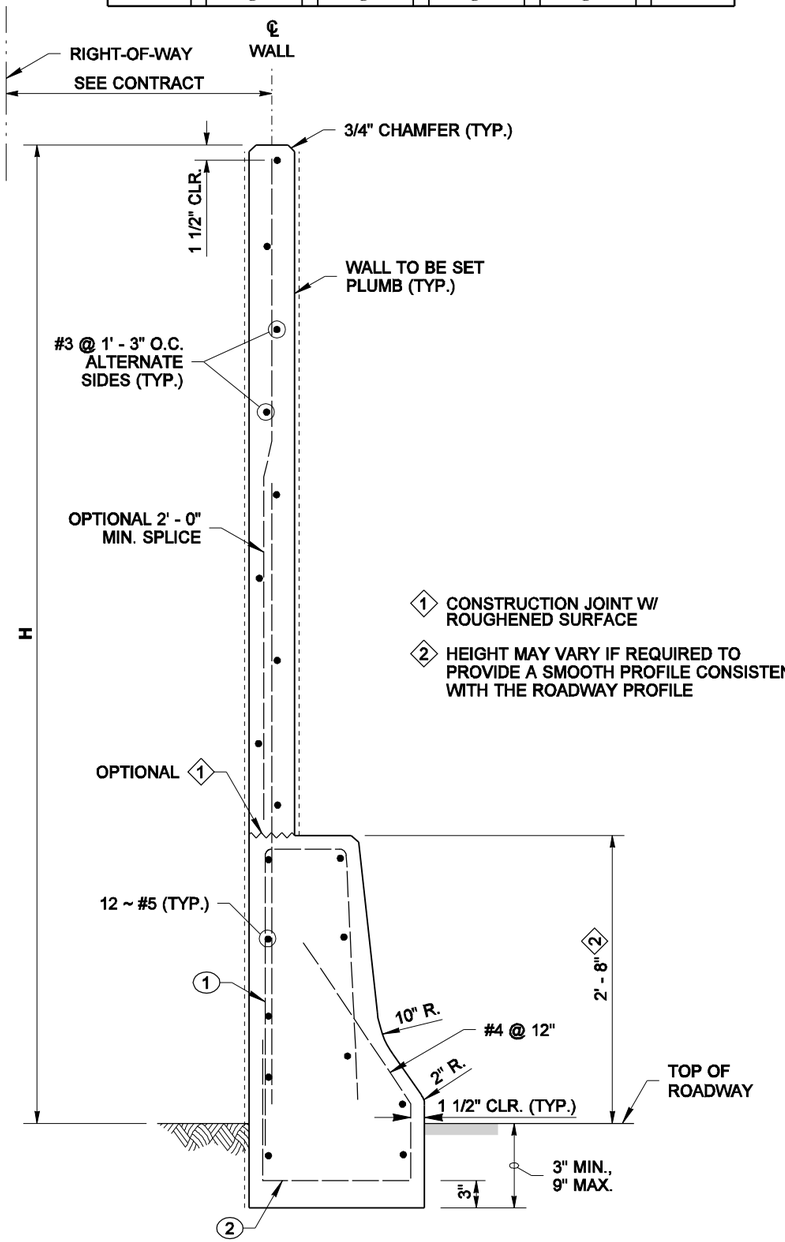

1 CONSTRUCTION JOINT W/ ROUGHENED SURFACE

2 HEIGHT MAY VARY IF REQUIRED TO PROVIDE A SMOOTH PROFILE CONSISTENT WITH THE ROADWAY PROFILE

TYPICAL SECTION

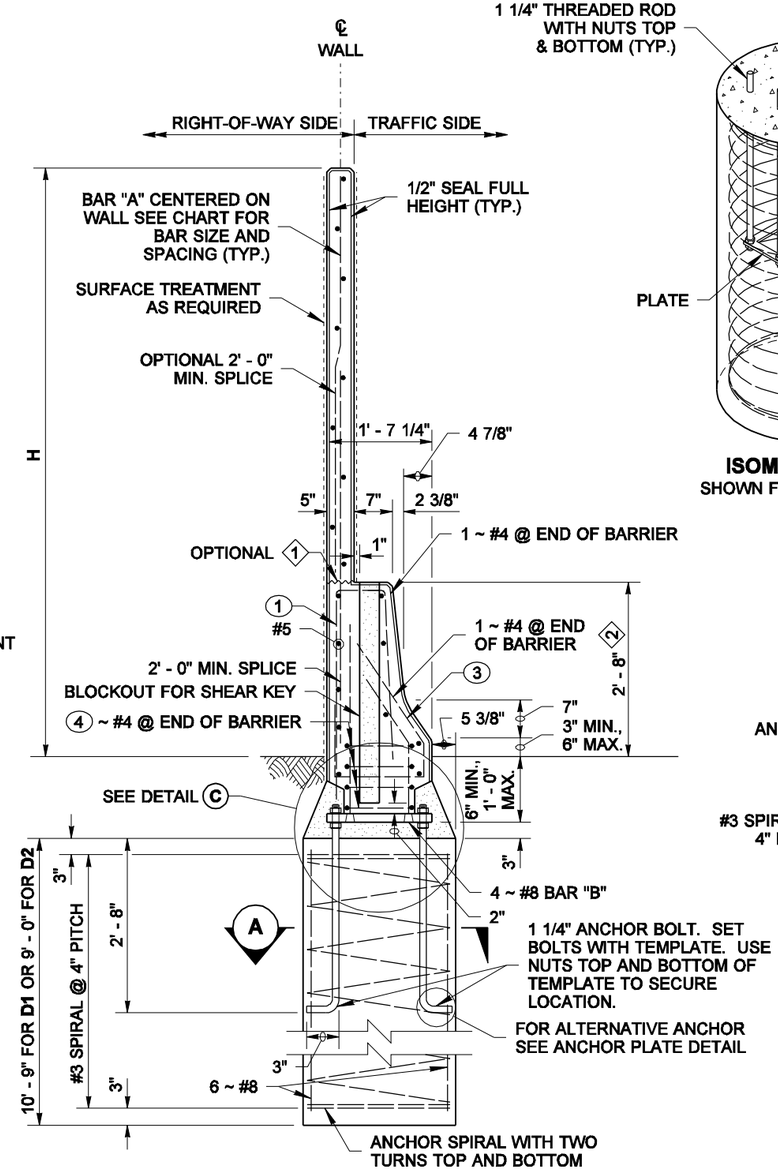

SECTION AT SHAFT SUPPORT

ISOMETRIC VIEW
SHOWN FOR INSTALLATION

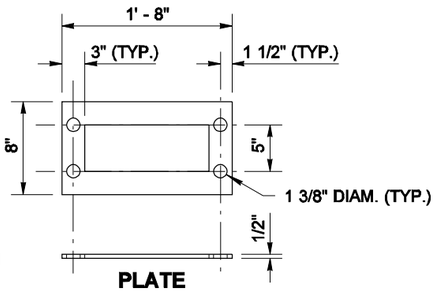

PLATE

ANCHOR PLATE DETAIL

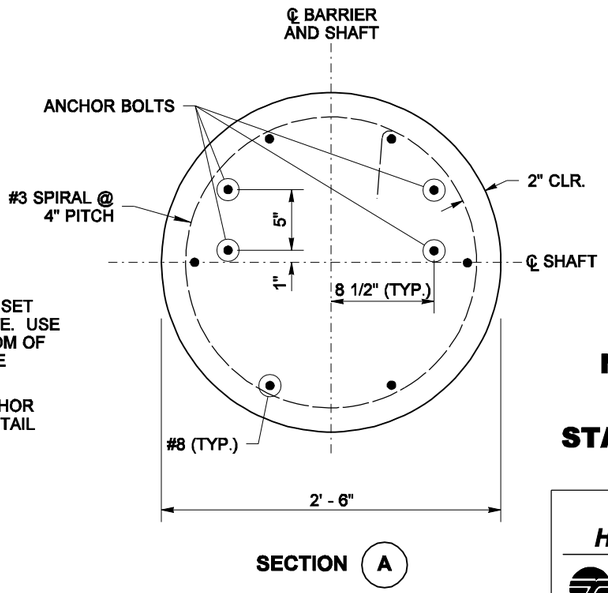

SECTION A

PRECAST CONCRETE WALL W/ TRAFFIC BARRIER ON SHAFT FOUNDATION

BIJAN KHALEGHI
STATE OF WASHINGTON
27695
REGISTERED
PROFESSIONAL ENGINEER

EXPIRES AUGUST 23, 2006

NOTE: THIS PLAN IS NOT A LEGAL ENGINEERING DOCUMENT BUT AN ELECTRONIC DUPLICATE. THE ORIGINAL, SIGNED BY THE ENGINEER AND APPROVED FOR PUBLICATION, IS KEPT ON FILE AT THE WASHINGTON STATE DEPARTMENT OF TRANSPORTATION. A COPY MAY BE OBTAINED UPON REQUEST.

NOISE BARRIER WALL TYPE 14

STANDARD PLAN D-2.46-00

SHEET 1 OF 2 SHEETS

APPROVED FOR PUBLICATION

Harold J. Peterfeso — STATE DESIGN ENGINEER — *11-10-05* — DATE

Washington State Department of Transportation

EFFECTIVE: APRIL 2, 2007 TO JANUARY 6, 2008

EFFECTIVE: APRIL 2, 2007 TO JANUARY 6, 2008

DRAWN BY: ADAM COCHRAN

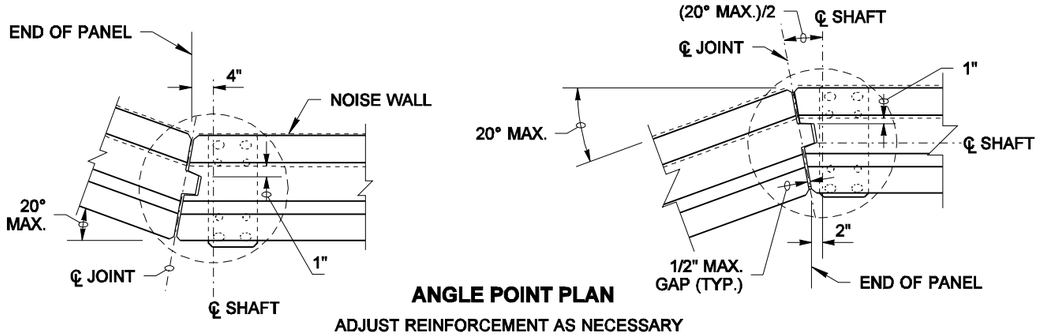

ANGLE POINT PLAN

ADJUST REINFORCEMENT AS NECESSARY TO ACCOMODATE ANGLE POINT

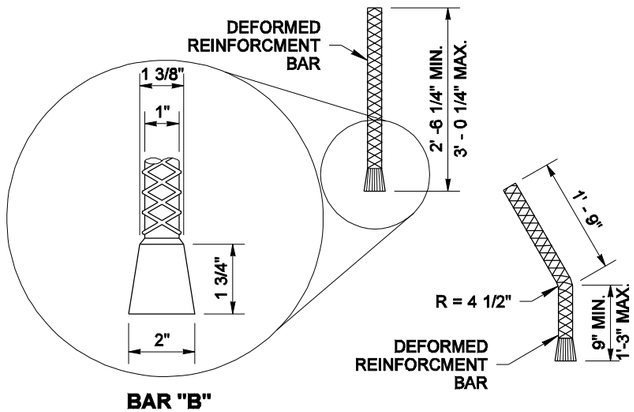

BAR "B"

WEDGE HEAD SHALL BEAR FIRMLY AND UNIFORMLY AGAINST BASE PLATE. BAR "B" SHALL BE HELD SECURE DURING CONCRETE PLACEMENT TO PREVENT GAPS BETWEEN WEDGE HEAD AND BASE PLATE.

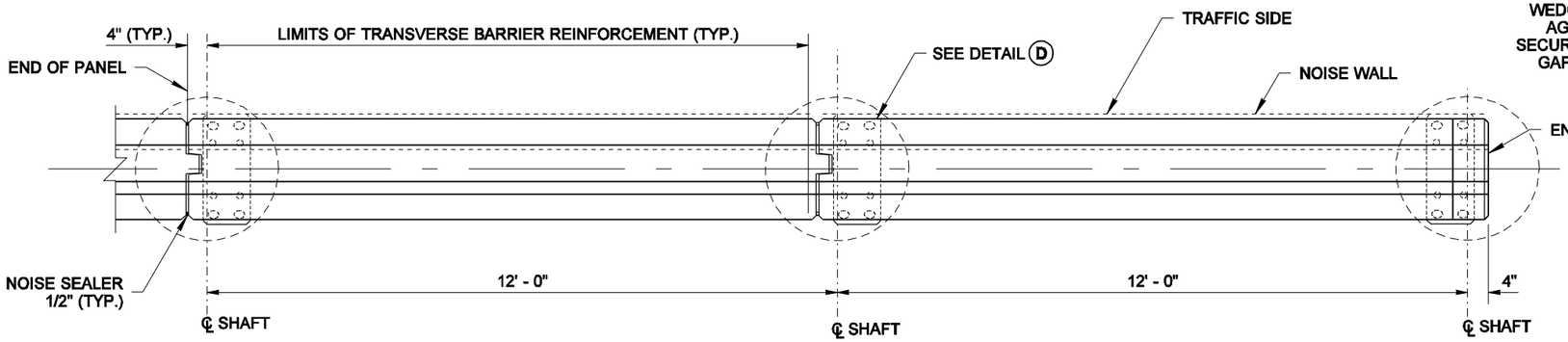

TYPICAL INTERMEDIATE AND END PANEL

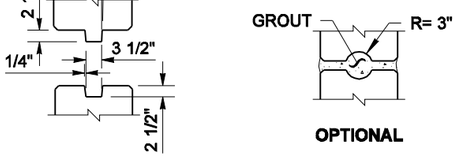

SHEAR-KEY DETAIL

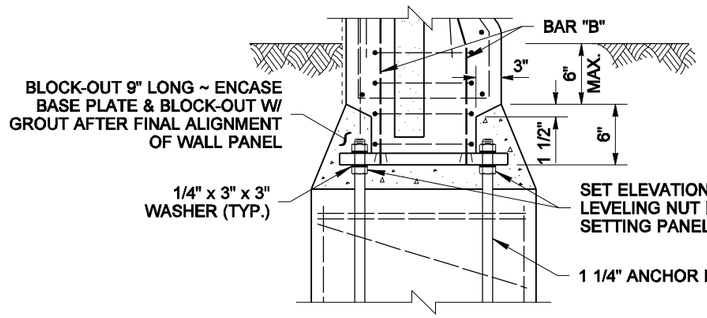

DETAIL (C)

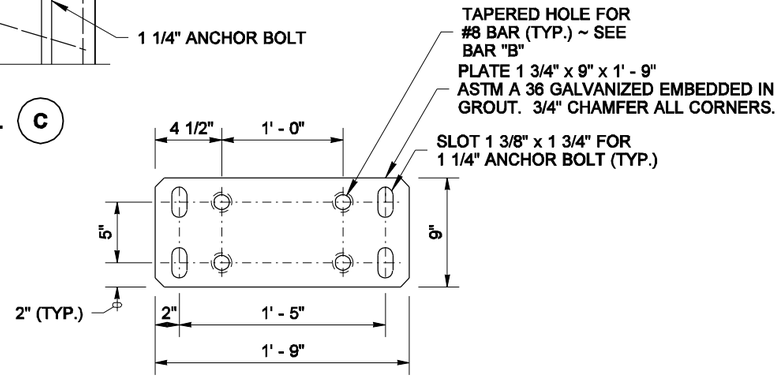

BASE PLATE DETAIL

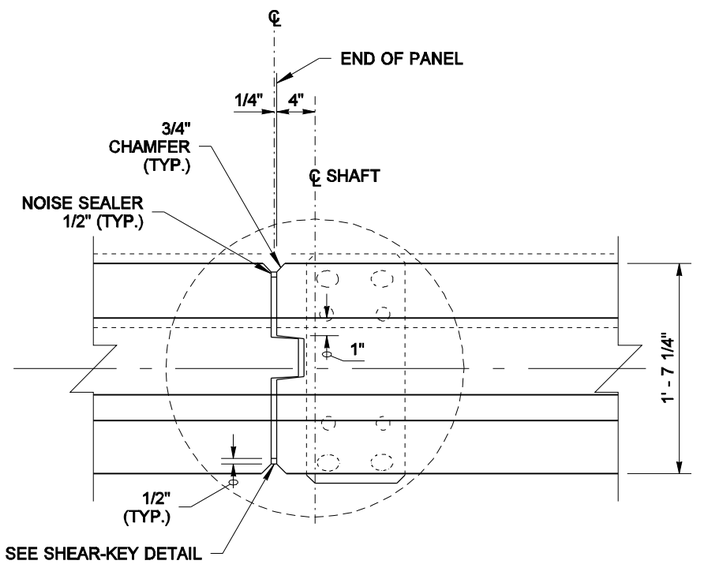

DETAIL (D)

PRECAST CONCRETE WALL W/ TRAFFIC BARRIER ON SHAFT FOUNDATION

BIJAN KHALEGHI
STATE OF WASHINGTON
27695
REGISTERED
PROFESSIONAL ENGINEER

EXPIRES AUGUST 23, 2006

NOTE: THIS PLAN IS NOT A LEGAL ENGINEERING DOCUMENT BUT AN ELECTRONIC DUPLICATE. THE ORIGINAL, SIGNED BY THE ENGINEER AND APPROVED FOR PUBLICATION, IS KEPT ON FILE AT THE WASHINGTON STATE DEPARTMENT OF TRANSPORTATION. A COPY MAY BE OBTAINED UPON REQUEST.

NOISE BARRIER WALL TYPE 14

STANDARD PLAN D-2.46-00

SHEET 2 OF 2 SHEETS

APPROVED FOR PUBLICATION

Harold J. Peterfeso — STATE DESIGN ENGINEER — *11-10-05* — DATE

Washington State Department of Transportation

EFFECTIVE: APRIL 2, 2007 TO JANUARY 6, 2008

EFFECTIVE: APRIL 2, 2007 TO JANUARY 6, 2008
EFFECTIVE: APRIL 2, 2007 TO JANUARY 6, 2008

DRAWN BY: ADAM COCHRAN

WALL HT H	TYPE 14SSA BAR "A"	TYPE 14SSB BAR "A"	TYPE 14SSC BAR "A"	TYPE 14SSD BAR "A"	WALL HT H
6' - 0"	#4 @ 15"	#4 @ 15"	#4 @ 15"	#4 @ 15"	6' - 0"
8' - 0"	#4 @ 15"	#4 @ 15"	#4 @ 15"	#4 @ 15"	8' - 0"
10' - 0"	#4 @ 15"	#4 @ 15"	#4 @ 15"	#4 @ 15"	10' - 0"
12' - 0"	#4 @ 15"	#4 @ 15"	#4 @ 15"	#4 @ 15"	12' - 0"
14' - 0"	#4 @ 15"	#4 @ 11"	#4 @ 15"	#4 @ 10"	14' - 0"
16' - 0"	#4 @ 10"	#4 @ 10"	#4 @ 10"	#5 @ 12"	16' - 0"
18' - 0"	#4 @ 10"	#5 @ 12"	#4 @ 10"	#5 @ 12"	18' - 0"

BENDING DIAGRAM

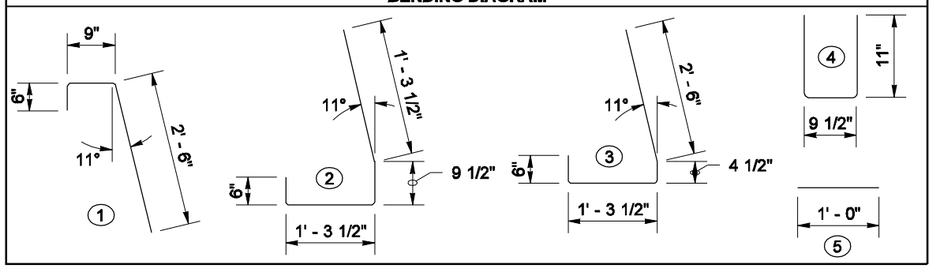

NOTES

1. Wall to be designated Noise Barrier Wall Type 14SSA, 14SSB, 14SSC or 14SSD. The Contract specifies actual wall designations.
2. For intermediate wall heights, use the next higher H.
3. Panels shall have at least 3 feet level ground on each side.
4. All joints shall be in full contact and sealed.
5. Anchor Bolts, Nuts, Washers, Base Plate, and Bar B shall have a Protective Coating of one of the following: Hot Dipped Galvanizing AASHTO M 232 for Hardware; AASHTO M 111 for Washers and Plates: Mechanical Galvanizing AASHTO M 298 CL 55, or Zinc Rich Paint, Paint threads and nuts after installation.
6. The bottom 9" of Bar "B" shall be painted with one coat of Formula A-6-86 Zinc Dust Oxide Primer OR, one coat of Formula A-11-99 Primer.
7. The Contract specifies actual foundation requirements D1 or D2.

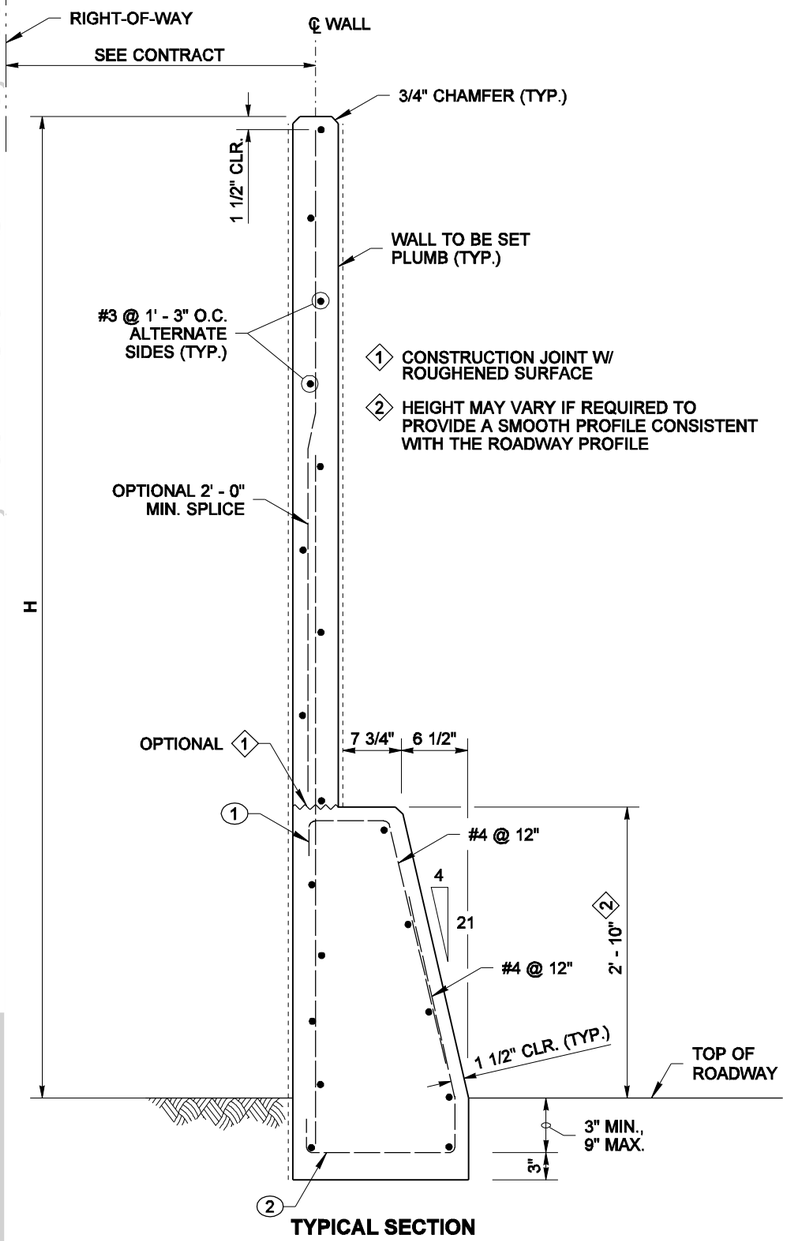

TYPICAL SECTION

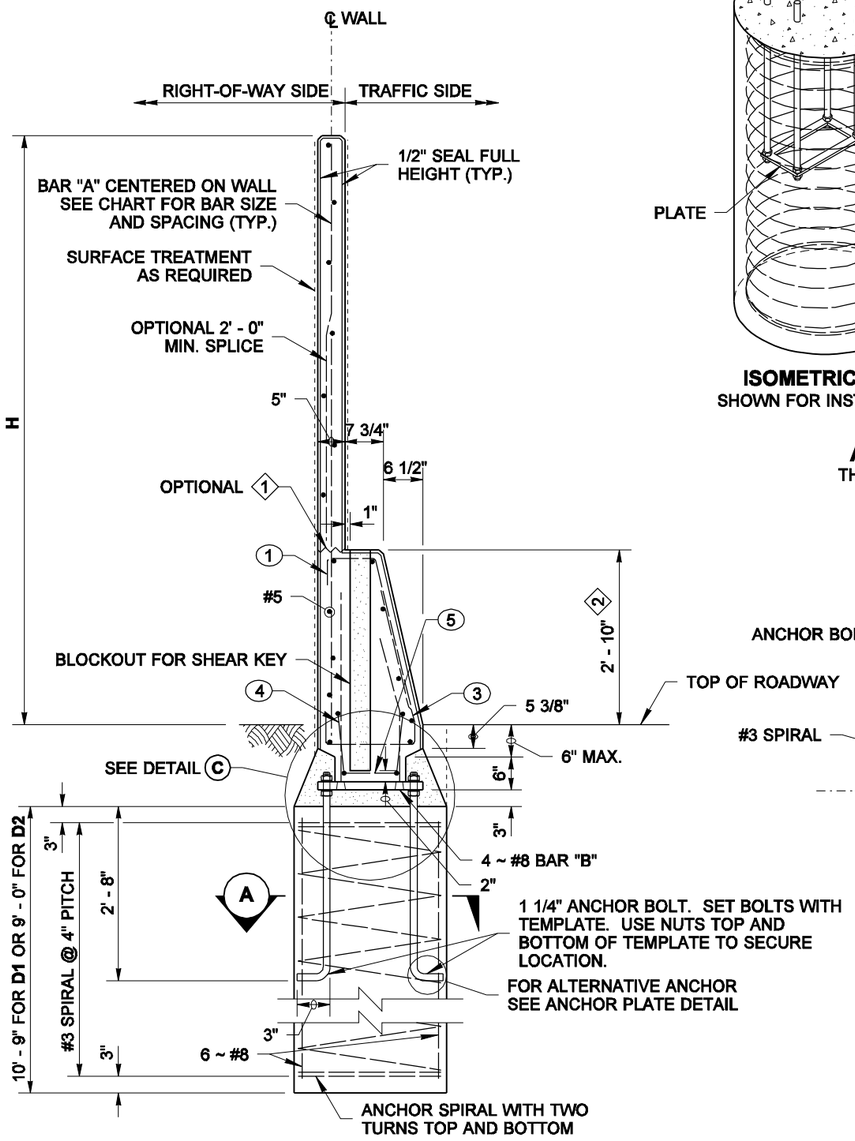

SECTION AT SHAFT SUPPORT

ISOMETRIC VIEW
SHOWN FOR INSTALLATION

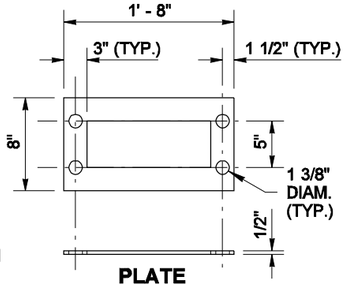

PLATE

ALTERNATE ANCHOR DETAIL
THREADED ROD WITH NUTS TOP AND BOTTOM

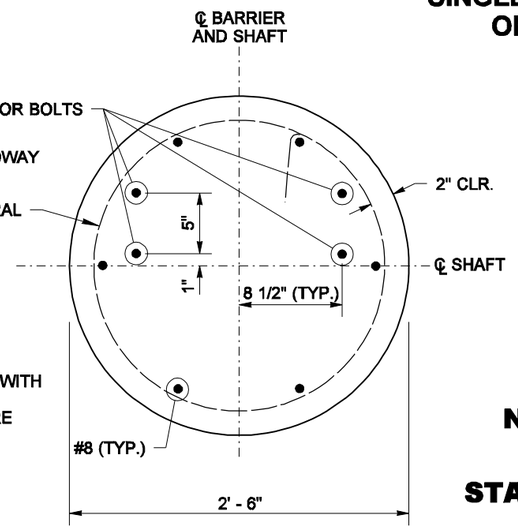

SECTION A

WIND EXPOSURE & VELOCITY		
NOISE BARRIER TYPE	WIND EXPOSURE	WIND VELOCITY (MPH)
14SSA	B1	80
14SSB	B1	90
14SSC	B2	80
14SSD	B2	90

PRECAST CONCRETE WALL W/ SINGLE SLOPE TRAFFIC BARRIER ON SHAFT FOUNDATION

BIJAN KHALEGHI
STATE OF WASHINGTON
27695
REGISTERED PROFESSIONAL ENGINEER
EXPIRES AUGUST 23, 2006

NOTE: THIS PLAN IS NOT A LEGAL ENGINEERING DOCUMENT BUT AN ELECTRONIC DUPLICATE. THE ORIGINAL, SIGNED BY THE ENGINEER AND APPROVED FOR PUBLICATION, IS KEPT ON FILE AT THE WASHINGTON STATE DEPARTMENT OF TRANSPORTATION. A COPY MAY BE OBTAINED UPON REQUEST.

NOISE BARRIER WALL TYPE 14SS

STANDARD PLAN D-2.48-00

SHEET 1 OF 2 SHEETS

APPROVED FOR PUBLICATION

Harold J. Peterfeso — STATE DESIGN ENGINEER
11-10-05 — DATE

Washington State Department of Transportation

EFFECTIVE: APRIL 2, 2007 TO JANUARY 6, 2008
EFFECTIVE: APRIL 2, 2007 TO JANUARY 6, 2008

EFFECTIVE: APRIL 2, 2007 TO JANUARY 6, 2008

DRAWN BY: ADAM COCHRAN

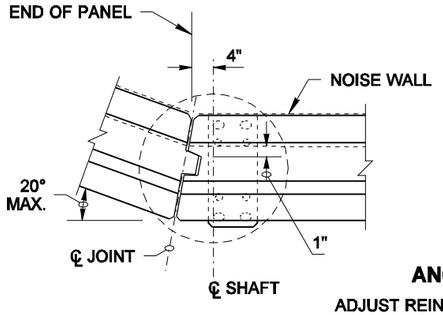

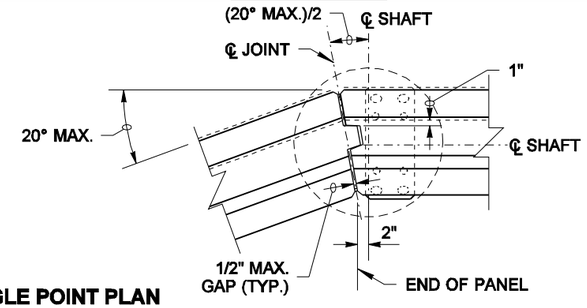

ANGLE POINT PLAN

ADJUST REINFORCEMENT AS NECESSARY
TO ACCOMODATE ANGLE POINT

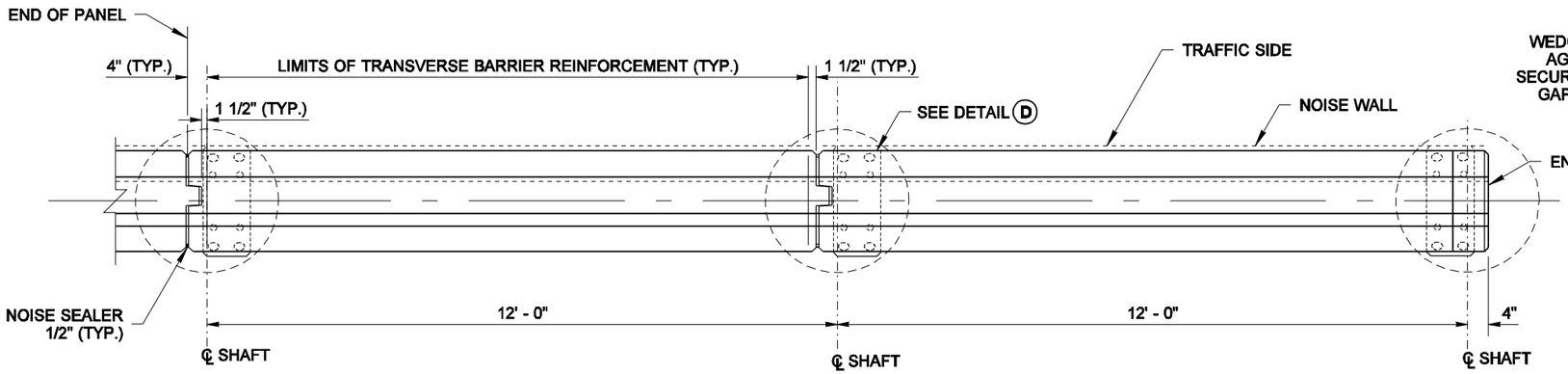

TYPICAL INTERMEDIATE AND END PANEL

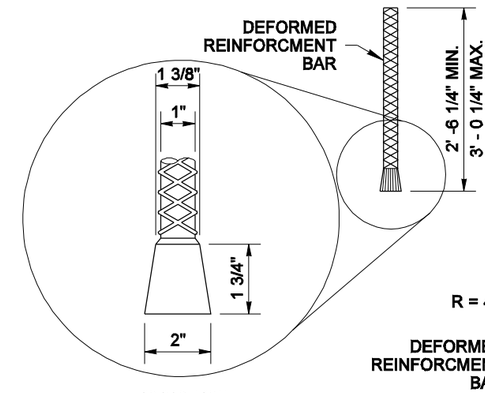

BAR "B"

WEDGE HEAD SHALL BEAR FIRMLY AND UNIFORMLY AGAINST BASE PLATE. BAR "B" SHALL BE HELD SECURE DURING CONCRETE PLACEMENT TO PREVENT GAPS BETWEEN WEDGE HEAD AND BASE PLATE.

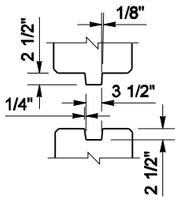

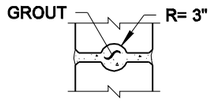

SHEAR-KEY DETAIL

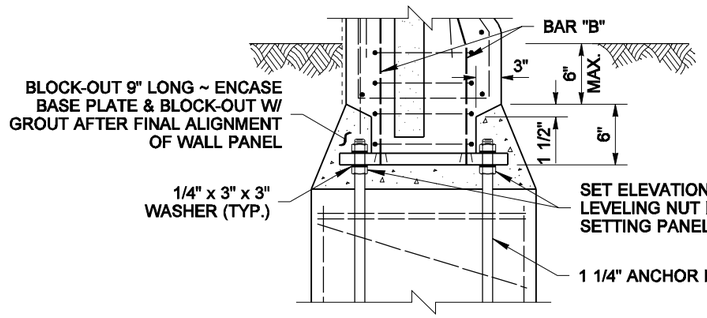

DETAIL C

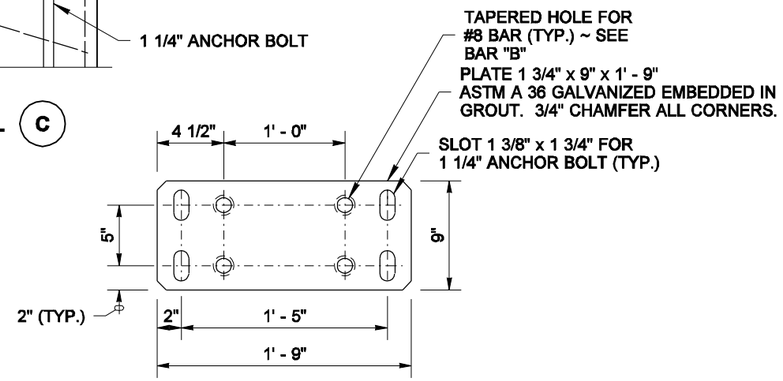

BASE PLATE DETAIL

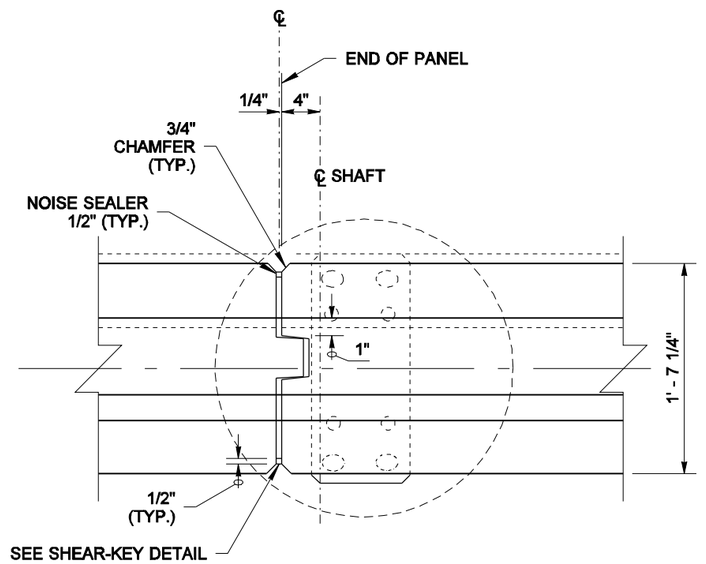

DETAIL D

PRECAST CONCRETE WALL W/ SINGLE SLOPE TRAFFIC BARRIER ON SHAFT FOUNDATION

BIJAN KHALEGHI
STATE OF WASHINGTON
27695
REGISTERED
PROFESSIONAL ENGINEER

EXPIRES AUGUST 23, 2006

NOTE: THIS PLAN IS NOT A LEGAL ENGINEERING DOCUMENT BUT AN ELECTRONIC DUPLICATE. THE ORIGINAL, SIGNED BY THE ENGINEER AND APPROVED FOR PUBLICATION, IS KEPT ON FILE AT THE WASHINGTON STATE DEPARTMENT OF TRANSPORTATION. A COPY MAY BE OBTAINED UPON REQUEST.

NOISE BARRIER WALL TYPE 14SS

STANDARD PLAN D-2.48-00

SHEET 2 OF 2 SHEETS

APPROVED FOR PUBLICATION

Harold J. Peterfeso — STATE DESIGN ENGINEER — *11-10-05* — DATE

Washington State Department of Transportation

EFFECTIVE: APRIL 2, 2007 TO JANUARY 6, 2008

EFFECTIVE: APRIL 2, 2007 TO JANUARY 6, 2008

EFFECTIVE: APRIL 2, 2007 TO JANUARY 6, 2008

DRAWN BY: ADAM COCHRAN

WIND EXPOSURE & VELOCITY		
NOISE BARRIER TYPE	WIND EXPOSURE	WIND VELOCITY (MPH)
16A	B1	80
16B	B1	90
16C	B2	80
16D	B2	90

SOIL TYPE	
SOIL TYPE	ANGLE OF INTERNAL FRICTION ϕ (DEGREES)
D1	32
D2	38

CMU = CONCRETE MASONRY UNIT

WALL HT H	TYPE 16A					
	CMU WIDTH	X	DEPTH D1	DEPTH D2	BAR "C"	BAR "D"
6' - 0"	8"	—	3' - 3"	3' - 0"	—	#6 @ 48"
8' - 0"	8"	—	3' - 6"	3' - 4"	—	#6 @ 48"
10' - 0"	8"	—	3' - 10"	3' - 6"	—	#6 @ 48"
12' - 0"	8"	—	4' - 7"	3' - 8"	—	#6 @ 48"
14' - 0"	8"	—	4' - 4"	3' - 10"	—	#6 @ 32"
16' - 0"	8"	—	4' - 7"	4' - 1"	—	#6 @ 24"
18' - 0"	10"	5' - 4"	4' - 10"	4' - 3"	#6 @ 48"	#6 @ 48"
20' - 0"	10"	6' - 0"	5' - 3"	4' - 9"	#6 @ 32"	#6 @ 32"
22' - 0"	10"	6' - 8"	5' - 6"	5' - 0"	#6 @ 24"	#6 @ 24"
24' - 0"	10"	7' - 4"	5' - 9"	5' - 3"	#6 @ 18"	#6 @ 18"

WALL HT H	TYPE 16C					
	CMU WIDTH	X	DEPTH D1	DEPTH D2	BAR "C"	BAR "D"
6' - 0"	8"	—	3' - 6"	3' - 3"	—	#6 @ 48"
8' - 0"	8"	—	3' - 9"	3' - 5"	—	#6 @ 48"
10' - 0"	8"	—	4' - 7"	3' - 8"	—	#6 @ 48"
12' - 0"	8"	—	4' - 4"	3' - 11"	—	#6 @ 32"
14' - 0"	8"	—	4' - 8"	4' - 2"	—	#6 @ 24"
16' - 0"	10"	4' - 0"	4' - 11"	4' - 5"	#6 @ 40"	#6 @ 40"
18' - 0"	10"	4' - 8"	5' - 3"	4' - 8"	#6 @ 32"	#6 @ 32"
20' - 0"	10"	5' - 4"	5' - 6"	5' - 0"	#6 @ 24"	#6 @ 24"
22' - 0"	10"	6' - 0"	5' - 9"	5' - 3"	#6 @ 16"	#6 @ 16"
24' - 0"	10"	7' - 8"	6' - 0"	5' - 6"	#7 @ 16"	#7 @ 16"

WALL HT H	TYPE 16B					
	CMU WIDTH	X	DEPTH D1	DEPTH D2	BAR "C"	BAR "D"
6' - 0"	8"	—	3' - 8"	3' - 4"	—	#6 @ 48"
8' - 0"	8"	—	4' - 0"	3' - 8"	—	#6 @ 48"
10' - 0"	8"	—	4' - 4"	3' - 10"	—	#6 @ 48"
12' - 0"	8"	—	4' - 8"	4' - 2"	—	#6 @ 40"
14' - 0"	10"	4' - 0"	4' - 11"	4' - 5"	#6 @ 40"	#6 @ 40"
16' - 0"	10"	4' - 8"	5' - 3"	4' - 8"	#6 @ 32"	#6 @ 32"
18' - 0"	10"	5' - 4"	5' - 6"	5' - 0"	#6 @ 24"	#6 @ 24"
20' - 0"	10"	6' - 0"	4' - 9"	5' - 3"	#7 @ 24"	#7 @ 24"
22' - 0"	10"	8' - 0"	6' - 0"	5' - 6"	#7 @ 16"	#7 @ 16"
24' - 0"	10"	10' - 0"	6' - 3"	5' - 9"	#8 @ 16"	#8 @ 16"

WALL HT H	TYPE 16D					
	CMU WIDTH	X	DEPTH D1	DEPTH D2	BAR "C"	BAR "D"
6' - 0"	8"	—	3' - 10"	3' - 5"	—	#6 @ 48"
8' - 0"	8"	—	4' - 2"	3' - 9"	—	#6 @ 48"
10' - 0"	8"	—	4' - 5"	4' - 0"	—	#6 @ 32"
12' - 0"	10"	4' - 0"	4' - 10"	4' - 4"	#6 @ 48"	#6 @ 48"
14' - 0"	10"	4' - 0"	5' - 3"	4' - 7"	#6 @ 32"	#6 @ 32"
16' - 0"	10"	4' - 8"	5' - 7"	4' - 11"	#6 @ 24"	#6 @ 24"
18' - 0"	10"	5' - 4"	5' - 10"	5' - 1"	#6 @ 18"	#6 @ 18"
20' - 0"	10"	7' - 4"	6' - 0"	5' - 6"	#7 @ 18"	#7 @ 18"
22' - 0"	10"	9' - 8"	6' - 6"	5' - 9"	#8 @ 18"	#8 @ 18"
24' - 0"	10"	12' - 0"	6' - 9"	6' - 0"	#9 @ 18"	#9 @ 18"

NOTES

1. Wall to be designated Noise Barrier Wall Type 16A, 16B, 16C or 16D. The Contract specifies actual wall designations.
2. For intermediate wall heights, use the next higher H.
3. All masonry shall be hollow unit and installed as running bond.
4. All masonry is to be specially inspected.
5. All Concrete Masonry Unit (CMU) cells that have vertical steel reinforcing bars or bond beam units shall be filled with grout.
6. Panels shall have at least 3 feet of level ground on each side.
7. Construction joints in the trench footing shall be spaced at 120 feet maximum.
8. See "Masonry Wall Finishes and Details" sheet for masonry block finishes, special shapes, sizes and layouts.
9. The Contract specifies actual foundation requirements D1 or D2.

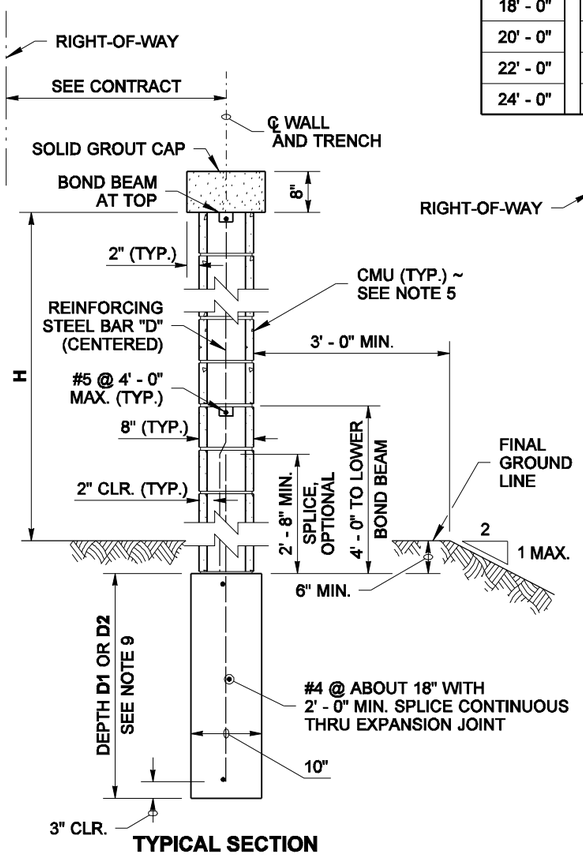

TYPICAL SECTION 8" WIDE CMU

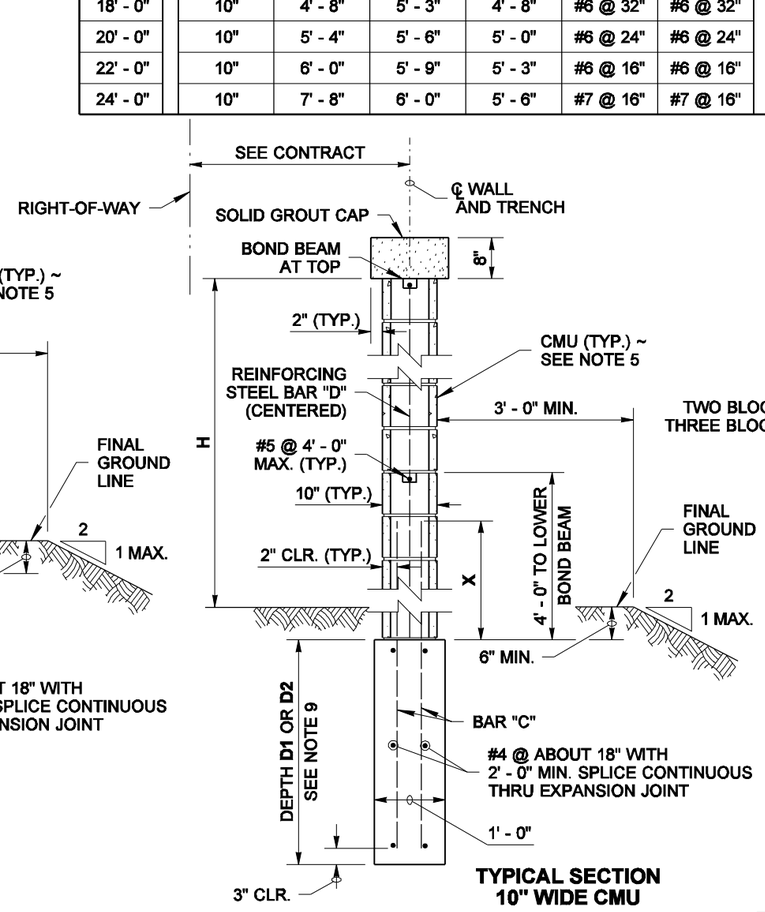

TYPICAL SECTION 10" WIDE CMU

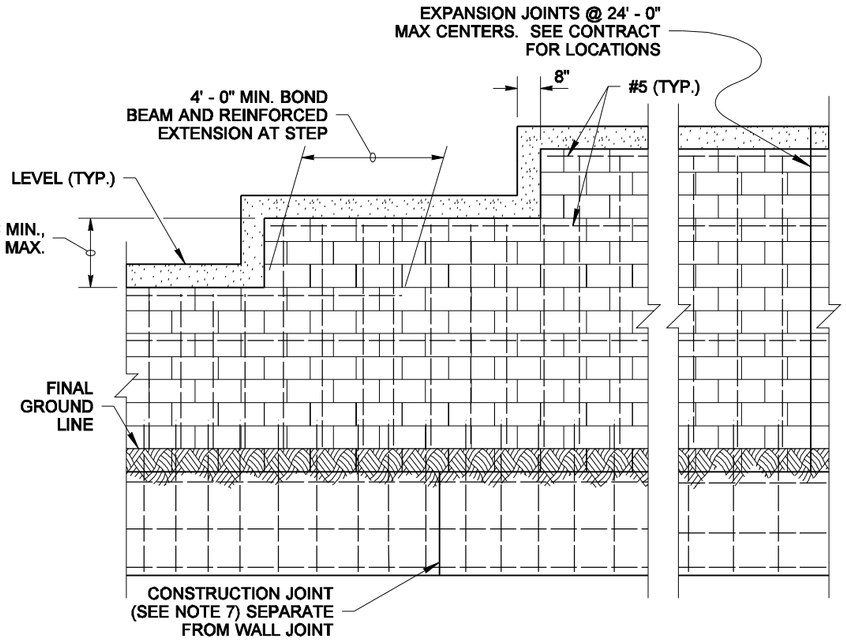

ELEVATION

MASONRY WALL ON TRENCH FOOTING

BIJAN KHALEGHI
STATE OF WASHINGTON
27695
REGISTERED
PROFESSIONAL ENGINEER

EXPIRES AUGUST 23, 2006

NOTE: THIS PLAN IS NOT A LEGAL ENGINEERING DOCUMENT BUT AN ELECTRONIC DUPLICATE. THE ORIGINAL, SIGNED BY THE ENGINEER AND APPROVED FOR PUBLICATION, IS KEPT ON FILE AT THE WASHINGTON STATE DEPARTMENT OF TRANSPORTATION. A COPY MAY BE OBTAINED UPON REQUEST.

NOISE BARRIER WALL TYPE 16

STANDARD PLAN D-2.60-00

SHEET 1 OF 2 SHEETS

APPROVED FOR PUBLICATION

Harold J. Peterfeso — STATE DESIGN ENGINEER
11-10-05 — DATE

Washington State Department of Transportation

EFFECTIVE: APRIL 2, 2007 TO JANUARY 6, 2008

EFFECTIVE: APRIL 2, 2007 TO JANUARY 6, 2008

EFFECTIVE: APRIL 2, 2007 TO JANUARY 6, 2008

DRAWN BY: ADAM COCHRAN

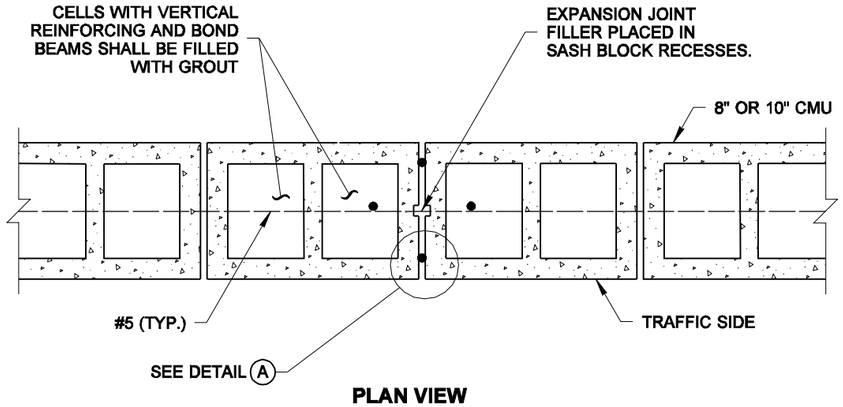

PLAN VIEW

TYPICAL EXPANSION JOINT

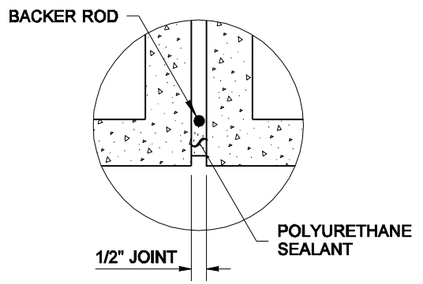

DETAIL (A)

TYPICAL BOTH SIDES OF WALL

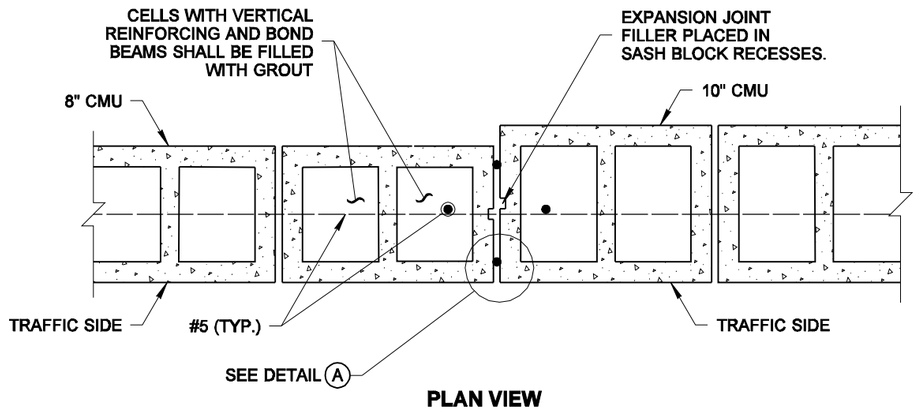

PLAN VIEW

EXPANSION JOINT AT WIDTH STEP

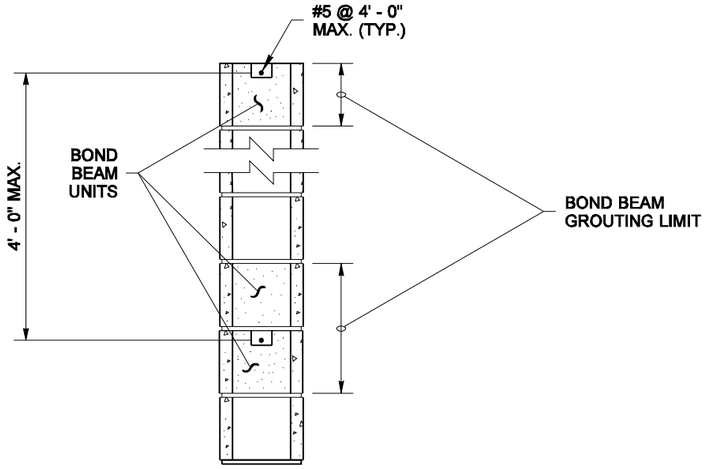

BOND BEAM DETAIL

MASONRY WALL ON TRENCH FOOTING

BIJAN KHALEGHI
STATE OF WASHINGTON
27695
REGISTERED
PROFESSIONAL ENGINEER

EXPIRES AUGUST 23, 2006

NOTE: THIS PLAN IS NOT A LEGAL ENGINEERING DOCUMENT BUT AN ELECTRONIC DUPLICATE. THE ORIGINAL, SIGNED BY THE ENGINEER AND APPROVED FOR PUBLICATION, IS KEPT ON FILE AT THE WASHINGTON STATE DEPARTMENT OF TRANSPORTATION. A COPY MAY BE OBTAINED UPON REQUEST.

NOISE BARRIER WALL TYPE 16

STANDARD PLAN D-2.60-00

SHEET 2 OF 2 SHEETS

APPROVED FOR PUBLICATION

Harold J. Peterfeso — STATE DESIGN ENGINEER

11-10-05 — DATE

Washington State Department of Transportation

EFFECTIVE: APRIL 2, 2007 TO JANUARY 6, 2008

EFFECTIVE: APRIL 2, 2007 TO JANUARY 6, 2008

EFFECTIVE: APRIL 2, 2007 TO JANUARY 6, 2008

DRAWN BY: ADAM COCHRAN

WIND EXPOSURE & VELOCITY		
NOISE BARRIER TYPE	WIND EXPOSURE	WIND VELOCITY (MPH)
17A	B1	80
17B	B1	90
17C	B2	80
17D	B2	90

CMU = CONCRETE MASONRY UNIT

WALL HT H	TYPE 17A						
	CMU WIDTH	X	W	BAR "A"	BAR "C"	BAR "D"	BAR "E"
6' - 0"	8"	—	2' - 0"	3 ~ #4	—	#6 @ 48"	#4 @ 18"
8' - 0"	8"	—	2' - 3"	3 ~ #4	—	#6 @ 48"	#4 @ 18"
10' - 0"	8"	—	2' - 6"	3 ~ #4	—	#6 @ 48"	#4 @ 18"
12' - 0"	8"	—	3' - 0"	4 ~ #4	—	#6 @ 48"	#4 @ 18"
14' - 0"	8"	—	3' - 3"	4 ~ #4	—	#6 @ 32"	#4 @ 18"
16' - 0"	10"	5' - 4"	3' - 9"	5 ~ #4	—	#6 @ 32"	#4 @ 18"
18' - 0"	10"	6' - 0"	4' - 0"	5 ~ #4	#6 @ 48"	#6 @ 48"	#4 @ 18"
20' - 0"	10"	6' - 8"	5' - 0"	5 ~ #4	#6 @ 32"	#6 @ 32"	#4 @ 18"
22' - 0"	10"	7' - 4"	5' - 6"	5 ~ #4	#6 @ 24"	#6 @ 24"	#4 @ 18"
24' - 0"	10"	8' - 0"	6' - 0"	5 ~ #4	#6 @ 24"	#6 @ 24"	#4 @ 18"

WALL HT H	TYPE 17B						
	CMU WIDTH	X	W	BAR "A"	BAR "C"	BAR "D"	BAR "E"
6' - 0"	8"	—	12' - 3"	3 ~ #4	—	#6 @ 48"	#4 @ 18"
8' - 0"	8"	—	2' - 9"	4 ~ #4	—	#6 @ 48"	#4 @ 18"
10' - 0"	8"	—	3' - 3"	4 ~ #4	—	#6 @ 48"	#4 @ 18"
12' - 0"	10"	4' - 0"	3' - 9"	4 ~ #4	—	#6 @ 40"	#4 @ 18"
14' - 0"	10"	4' - 8"	4' - 3"	5 ~ #4	#6 @ 40"	#6 @ 40"	#4 @ 18"
16' - 0"	10"	5' - 4"	4' - 9"	5 ~ #4	#6 @ 32"	#6 @ 32"	#4 @ 18"
18' - 0"	10"	6' - 0"	5' - 3"	6 ~ #4	#6 @ 24"	#6 @ 24"	#4 @ 18"
20' - 0"	10"	8' - 0"	6' - 0"	5 ~ #4	#7 @ 24"	#7 @ 24"	#4 @ 18"
22' - 0"	10"	10' - 0"	6' - 3"	5 ~ #4	#7 @ 16"	#7 @ 16"	#4 @ 12"
24' - 0"	10"	12' - 0"	6' - 9"	5 ~ #4	#8 @ 16"	#8 @ 16"	#4 @ 12"

WALL HT H	TYPE 17C						
	CMU WIDTH	X	W	BAR "A"	BAR "C"	BAR "D"	BAR "E"
6' - 0"	8"	—	2' - 0"	3 ~ #4	—	#6 @ 48"	#4 @ 18"
8' - 0"	8"	—	2' - 6"	3 ~ #4	—	#6 @ 48"	#4 @ 18"
10' - 0"	8"	—	2' - 9"	3 ~ #4	—	#6 @ 48"	#4 @ 18"
12' - 0"	8"	—	3' - 3"	3 ~ #4	—	#6 @ 40"	#4 @ 18"
14' - 0"	10"	4' - 0"	3' - 9"	5 ~ #4	—	#6 @ 16"	#4 @ 18"
16' - 0"	10"	4' - 8"	4' - 3"	5 ~ #4	#6 @ 40"	#6 @ 40"	#4 @ 18"
18' - 0"	10"	5' - 4"	4' - 6"	5 ~ #4	#6 @ 32"	#6 @ 32"	#4 @ 18"
20' - 0"	10"	6' - 0"	5' - 3"	5 ~ #4	#6 @ 24"	#6 @ 16"	#4 @ 18"
22' - 0"	10"	7' - 0"	5' - 9"	5 ~ #4	#6 @ 16"	#6 @ 16"	#4 @ 18"
24' - 0"	10"	8' - 0"	6' - 3"	5 ~ #4	#7 @ 16"	#7 @ 16"	#4 @ 12"

WALL HT H	TYPE 17D						
	CMU WIDTH	X	W	BAR "A"	BAR "C"	BAR "D"	BAR "E"
6' - 0"	8"	—	2' - 6"	3 ~ #4	—	#6 @ 48"	#4 @ 18"
8' - 0"	8"	—	3' - 3"	5 ~ #4	—	#6 @ 48"	#4 @ 18"
10' - 0"	10"	4' - 0"	3' - 6"	5 ~ #4	—	#6 @ 24"	#4 @ 18"
12' - 0"	10"	4' - 0"	4' - 3"	5 ~ #4	#6 @ 32"	#6 @ 32"	#4 @ 18"
14' - 0"	10"	4' - 8"	4' - 9"	5 ~ #4	#6 @ 24"	#6 @ 24"	#4 @ 18"
16' - 0"	10"	5' - 4"	5' - 6"	5 ~ #4	#6 @ 16"	#7 @ 16"	#4 @ 18"
18' - 0"	10"	7' - 4"	6' - 0"	5 ~ #4	#7 @ 24"	#7 @ 16"	#4 @ 18"
20' - 0"	10"	9' - 8"	6' - 6"	5 ~ #4	#7 @ 16"	#8 @ 16"	#4 @ 12"
22' - 0"	10"	12' - 0"	7' - 0"	5 ~ #4	#7 @ 16"	#8 @ 16"	#4 @ 12"
24' - 0"	10"	15' - 0"	7' - 6"	6 ~ #4	#7 @ 16"	#8 @ 16"	#4 @ 12"

NOTES

1. Wall to be designated Noise Barrier Wall Type 17A, 17B, 17C or 17D. The Contract specifies actual wall designations.
2. For intermediate wall heights, use the next higher H.
3. All masonry shall be hollow unit and installed as running bond.
4. All masonry is to be specially inspected.
5. All Concrete Masonry Unit (CMU) cells that have vertical steel reinforcing bars or bond beam units shall be filled with grout.
6. Panels shall have at least 3 feet of level ground on each side.
7. Construction joints in the footing shall be spaced at 120 feet maximum.
8. See "Masonry Wall Finishes and Details" sheets for masonry block finishes, special shapes, sizes and layout.

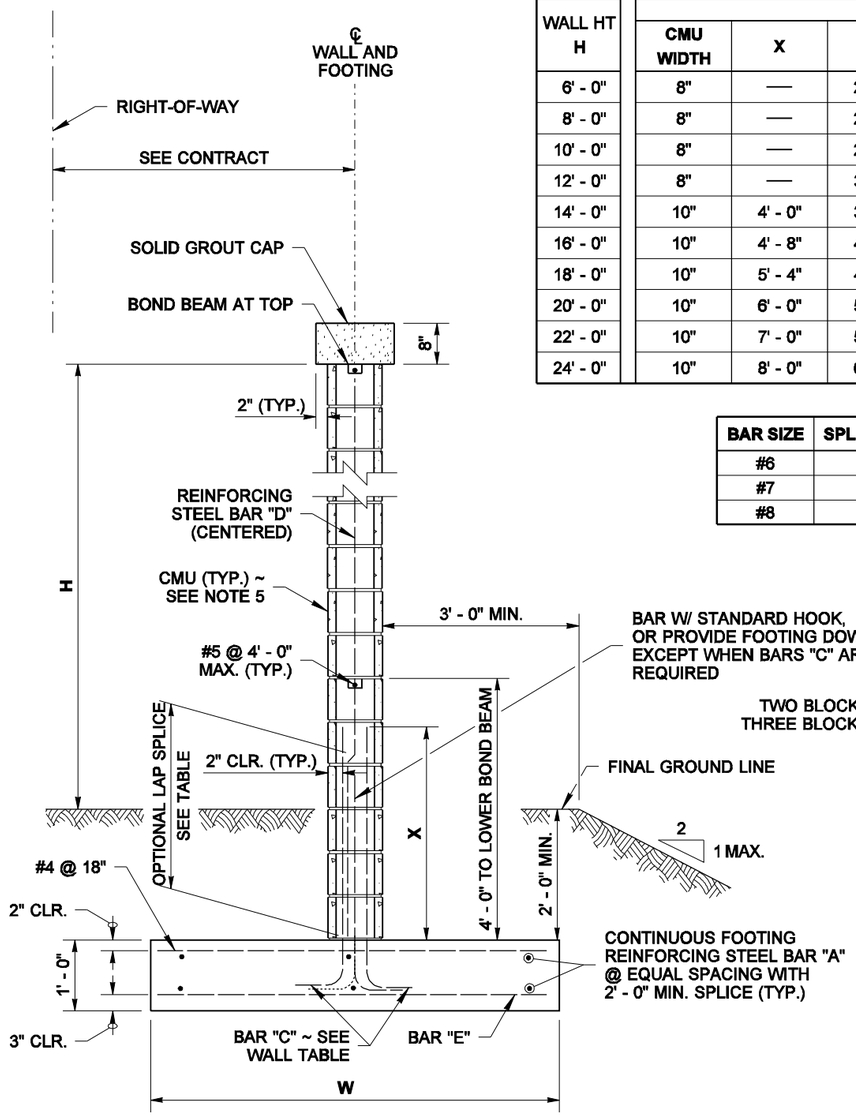

TYPICAL SECTION

BAR SIZE	SPLICE LENGTH
#6	2' - 8"
#7	3' - 8"
#8	4' - 10"

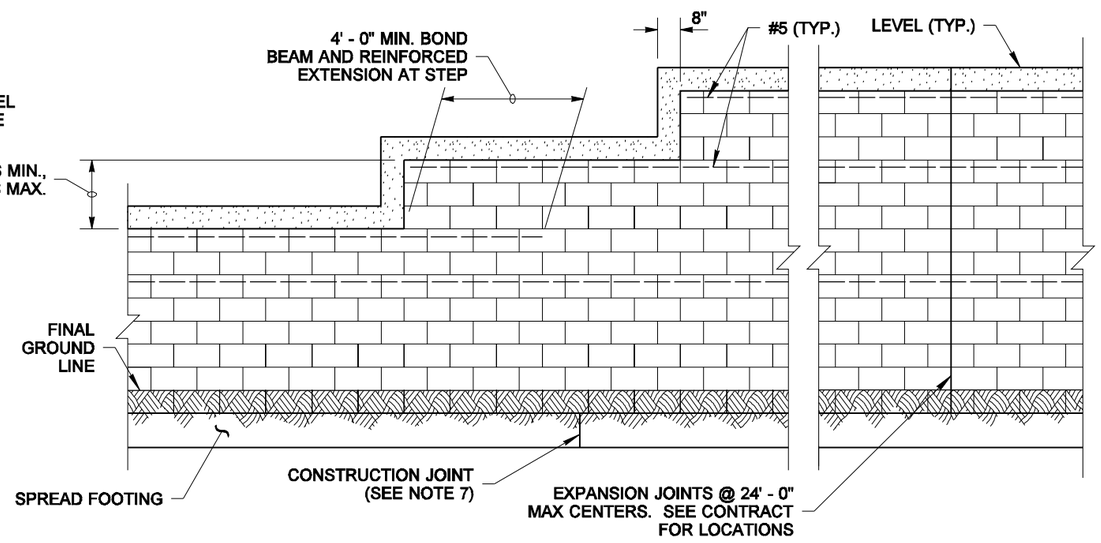

ELEVATION

MASONRY WALL ON SPREAD FOOTING

BIJAN KHALEGHI
STATE OF WASHINGTON
27695
REGISTERED
PROFESSIONAL ENGINEER

EXPIRES AUGUST 23, 2006

NOTE: THIS PLAN IS NOT A LEGAL ENGINEERING DOCUMENT BUT AN ELECTRONIC DUPLICATE. THE ORIGINAL, SIGNED BY THE ENGINEER AND APPROVED FOR PUBLICATION, IS KEPT ON FILE AT THE WASHINGTON STATE DEPARTMENT OF TRANSPORTATION. A COPY MAY BE OBTAINED UPON REQUEST.

NOISE BARRIER WALL TYPE 17

STANDARD PLAN D-2.62-00

SHEET 1 OF 2 SHEETS

APPROVED FOR PUBLICATION

Harold J. Peterfeso — STATE DESIGN ENGINEER

11-10-05 — DATE

Washington State Department of Transportation

EFFECTIVE: APRIL 2, 2007 TO JANUARY 6, 2008

EFFECTIVE: APRIL 2, 2007 TO JANUARY 6, 2008

EFFECTIVE: APRIL 2, 2007 TO JANUARY 6, 2008

DRAWN BY: ADAM COCHRAN

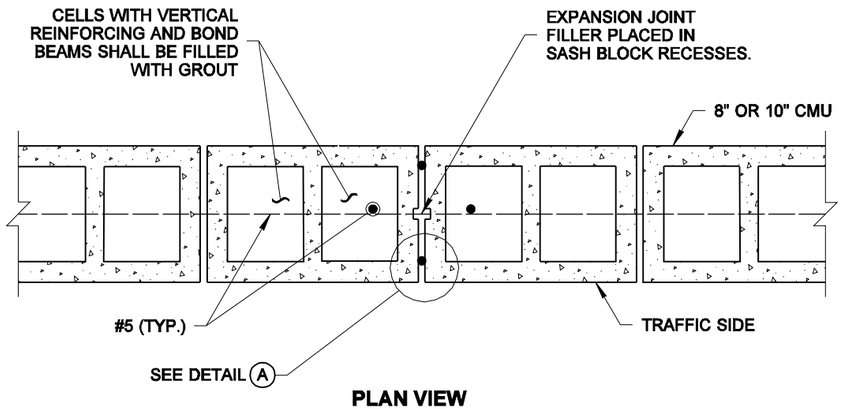

PLAN VIEW

TYPICAL EXPANSION JOINT

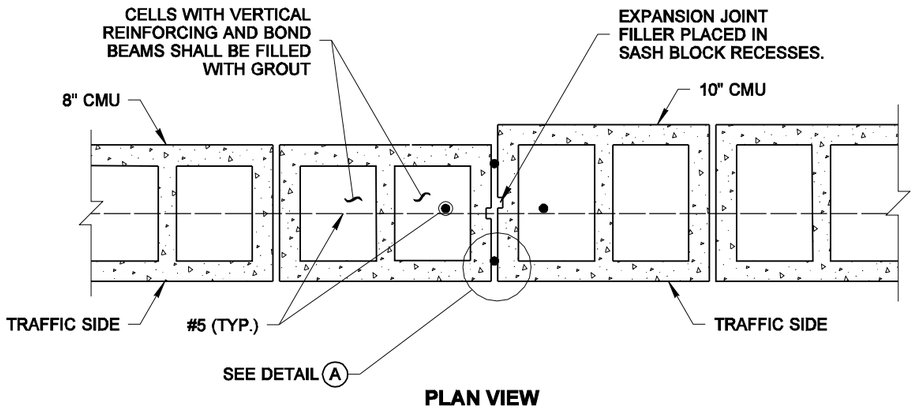

PLAN VIEW

EXPANSION JOINT AT WIDTH STEP

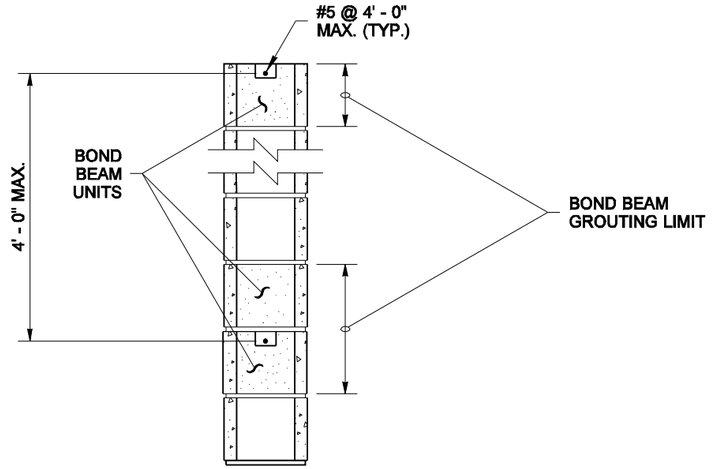

BOND BEAM DETAIL

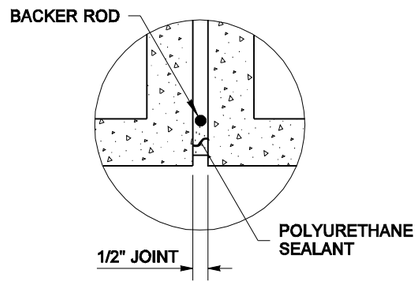

DETAIL A

TYPICAL BOTH SIDES OF WALL

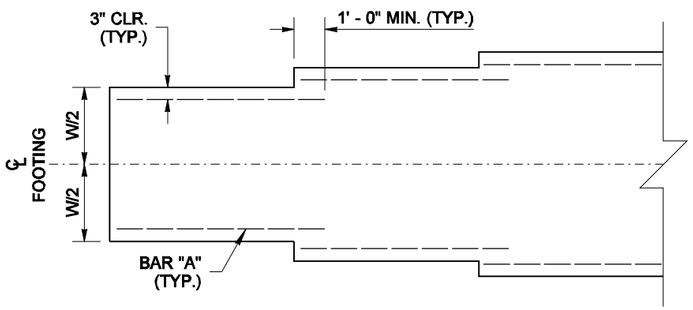

FOOTING WIDTH TRANSITION DETAIL

(FOR LOCATIONS WITHOUT FOOTING STEP)
NOTE: TRANSVERSE BARS NOT SHOWN

MASONRY WALL ON SPREAD FOOTING

BIJAN KHALEGHI
STATE OF WASHINGTON
27695
REGISTERED
PROFESSIONAL ENGINEER

EXPIRES AUGUST 23, 2006

NOTE: THIS PLAN IS NOT A LEGAL ENGINEERING DOCUMENT BUT AN ELECTRONIC DUPLICATE. THE ORIGINAL, SIGNED BY THE ENGINEER AND APPROVED FOR PUBLICATION, IS KEPT ON FILE AT THE WASHINGTON STATE DEPARTMENT OF TRANSPORTATION. A COPY MAY BE OBTAINED UPON REQUEST.

NOISE BARRIER WALL TYPE 17

STANDARD PLAN D-2.62-00

SHEET 2 OF 2 SHEETS

APPROVED FOR PUBLICATION

Harold J. Peterfeso — STATE DESIGN ENGINEER — *11-10-05* — DATE

Washington State Department of Transportation

EFFECTIVE: APRIL 2, 2007 TO JANUARY 6, 2008

EFFECTIVE: APRIL 2, 2007 TO JANUARY 6, 2008
EFFECTIVE: APRIL 2, 2007 TO JANUARY 6, 2008

DRAWN BY: ADAM COCHRAN

WIND EXPOSURE & VELOCITY		
NOISE BARRIER TYPE	WIND EXPOSURE	WIND VELOCITY (MPH)
18A	B1	80
18B	B1	90
18C	B2	80
18D	B2	90

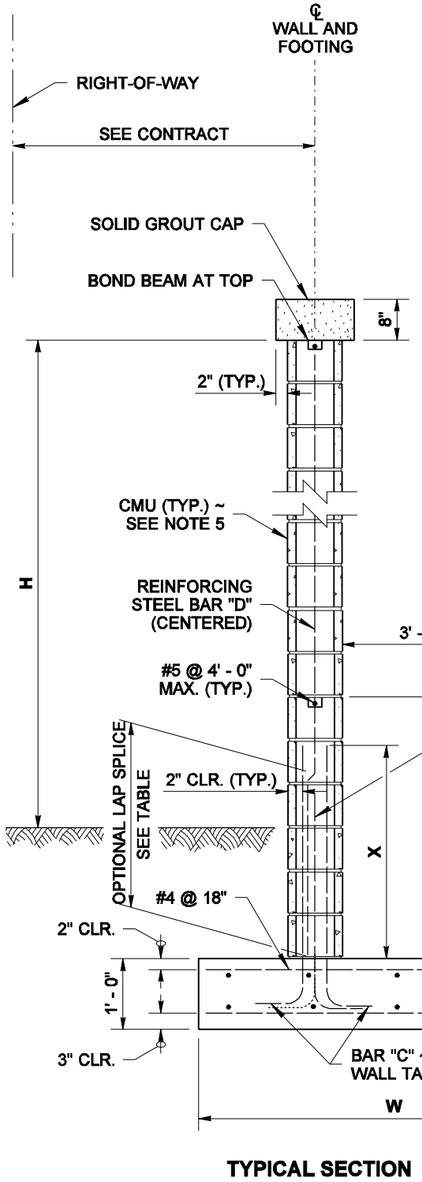

TYPICAL SECTION

WALL HT H	TYPE 18A						
	CMU WIDTH	X	W	BAR "A"	BAR "C"	BAR "D"	BAR "E"
6' - 0"	8"	—	2' - 0"	3 ~ #4	—	#6 @ 48"	#4 @ 18"
8' - 0"	8"	—	2' - 3"	3 ~ #4	—	#6 @ 48"	#4 @ 18"
10' - 0"	8"	—	2' - 6"	3 ~ #4	—	#6 @ 48"	#4 @ 18"
12' - 0"	8"	—	3' - 0"	4 ~ #4	—	#6 @ 48"	#4 @ 18"
14' - 0"	8"	—	3' - 3"	4 ~ #4	—	#6 @ 36"	#4 @ 18"
16' - 0"	10"	5' - 4"	3' - 9"	5 ~ #4	—	#6 @ 16"	#4 @ 18"
18' - 0"	10"	6' - 0"	4' - 0"	5 ~ #4	#6 @ 48"	#6 @ 48"	#4 @ 18"
20' - 0"	10"	6' - 8"	5' - 0"	5 ~ #4	#6 @ 32"	#6 @ 32"	#4 @ 18"
22' - 0"	10"	7' - 4"	5' - 6"	5 ~ #4	#6 @ 24"	#6 @ 24"	#4 @ 18"
24' - 0"	10"	8' - 0"	6' - 3"	5 ~ #4	#6 @ 16"	#6 @ 16"	#4 @ 18"

WALL HT H	TYPE 18B						
	CMU WIDTH	X	W	BAR "A"	BAR "C"	BAR "D"	BAR "E"
6' - 0"	8"	—	2' - 3"	3 ~ #4	—	#6 @ 48"	#4 @ 18"
8' - 0"	8"	—	2' - 9"	4 ~ #4	—	#6 @ 48"	#4 @ 18"
10' - 0"	8"	—	3' - 3"	4 ~ #4	—	#6 @ 48"	#4 @ 18"
12' - 0"	10"	4' - 0"	3' - 9"	4 ~ #4	—	#6 @ 40"	#4 @ 18"
14' - 0"	10"	4' - 8"	4' - 3"	5 ~ #4	#6 @ 40"	#6 @ 40"	#4 @ 18"
16' - 0"	10"	5' - 4"	5' - 3"	5 ~ #4	#6 @ 32"	#6 @ 32"	#4 @ 18"
18' - 0"	10"	6' - 0"	6' - 0"	6 ~ #4	#6 @ 24"	#6 @ 24"	#4 @ 18"
20' - 0"	10"	8' - 0"	7' - 0"	5 ~ #4	#7 @ 24"	#7 @ 24"	#4 @ 18"
22' - 0"	10"	10' - 0"	7' - 9"	5 ~ #4	#7 @ 16"	#7 @ 16"	#4 @ 12"
24' - 0"	10"	12' - 0"	8' - 6"	5 ~ #4	#8 @ 16"	#8 @ 16"	#4 @ 12"

WALL HT H	TYPE 18C						
	CMU WIDTH	X	W	BAR "A"	BAR "C"	BAR "D"	BAR "E"
6' - 0"	8"	—	2' - 0"	3 ~ #4	—	#6 @ 48"	#4 @ 18"
8' - 0"	8"	—	2' - 6"	3 ~ #4	—	#6 @ 48"	#4 @ 18"
10' - 0"	8"	—	2' - 9"	3 ~ #4	—	#6 @ 48"	#4 @ 18"
12' - 0"	8"	—	3' - 3"	3 ~ #4	—	#6 @ 40"	#4 @ 18"
14' - 0"	10"	4' - 0"	3' - 9"	5 ~ #4	—	#6 @ 16"	#4 @ 18"
16' - 0"	10"	4' - 8"	4' - 3"	5 ~ #4	#6 @ 40"	#6 @ 40"	#4 @ 18"
18' - 0"	10"	5' - 4"	5' - 0"	5 ~ #4	#6 @ 32"	#6 @ 32"	#4 @ 18"
20' - 0"	10"	6' - 0"	5' - 9"	5 ~ #4	#6 @ 24"	#6 @ 24"	#4 @ 18"
22' - 0"	10"	7' - 0"	6' - 6"	5 ~ #4	#6 @ 16"	#6 @ 16"	#4 @ 18"
24' - 0"	10"	8' - 0"	7' - 6"	5 ~ #4	#7 @ 16"	#7 @ 16"	#4 @ 12"

WALL HT H	TYPE 18D						
	CMU WIDTH	X	W	BAR "A"	BAR "C"	BAR "D"	BAR "E"
6' - 0"	8"	—	2' - 6"	3 ~ #4	—	#6 @ 48"	#4 @ 18"
8' - 0"	8"	—	3' - 3"	5 ~ #4	—	#6 @ 48"	#4 @ 18"
10' - 0"	10"	4' - 0"	3' - 6"	5 ~ #4	—	#6 @ 24"	#4 @ 18"
12' - 0"	10"	4' - 0"	4' - 3"	5 ~ #4	#6 @ 48"	#6 @ 32"	#4 @ 18"
14' - 0"	10"	4' - 8"	5' - 3"	5 ~ #4	#6 @ 32"	#6 @ 24"	#4 @ 18"
16' - 0"	10"	5' - 4"	6' - 3"	5 ~ #4	#6 @ 24"	#7 @ 16"	#4 @ 18"
18' - 0"	10"	7' - 4"	7' - 0"	5 ~ #4	#6 @ 16"	#7 @ 16"	#4 @ 18"
20' - 0"	10"	9' - 8"	8' - 0"	5 ~ #4	#7 @ 16"	#8 @ 16"	#4 @ 12"
22' - 0"	10"	12' - 0"	9' - 0"	5 ~ #4	#8 @ 16"	#8 @ 16"	#4 @ 12"
24' - 0"	10"	15' - 0"	9' - 9"	6 ~ #4	#9 @ 16"	#8 @ 16"	#4 @ 12"

CMU = CONCRETE MASONRY UNIT

BAR SIZE	SPLICE LENGTH
#6	2' - 8"
#7	3' - 8"
#8	4' - 10"

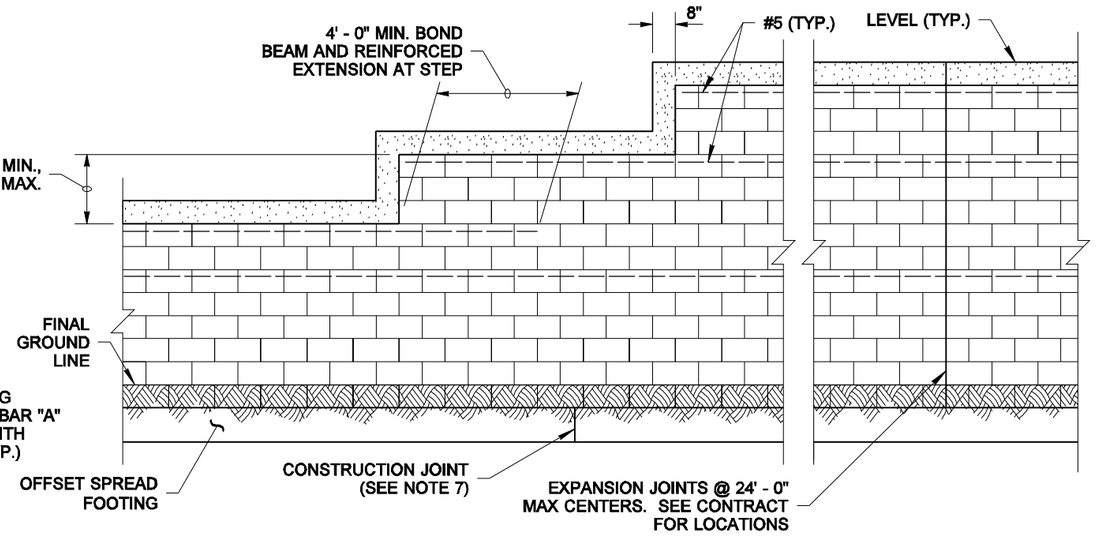

ELEVATION

NOTES

1. Wall to be designated Noise Barrier Wall Type 18A, 18B, 18C or 18D. The Contract specifies actual wall designations.
2. For intermediate wall heights, use the next higher H.
3. All masonry shall be hollow unit and installed as running bond.
4. All masonry is to be specially inspected.
5. All Concrete Masonry Unit (CMU) cells that have vertical steel reinforcing bars or bond beam units shall be filled with grout.
6. Panels shall have at least 3 feet of level ground on each side.
7. Construction joints in the footing shall be spaced at 120 feet maximum.
8. See "Masonry Wall Finishes and Details" sheets for masonry block finishes, special shapes, sizes and layout.

MASONRY WALL ON OFFSET SPREAD FOOTING

BIJAN KHALEGHI
STATE OF WASHINGTON
27695
REGISTERED
PROFESSIONAL ENGINEER

EXPIRES AUGUST 23, 2006

NOTE: THIS PLAN IS NOT A LEGAL ENGINEERING DOCUMENT BUT AN ELECTRONIC DUPLICATE. THE ORIGINAL, SIGNED BY THE ENGINEER AND APPROVED FOR PUBLICATION, IS KEPT ON FILE AT THE WASHINGTON STATE DEPARTMENT OF TRANSPORTATION. A COPY MAY BE OBTAINED UPON REQUEST.

NOISE BARRIER WALL TYPE 18

STANDARD PLAN D-2.64-00

SHEET 1 OF 2 SHEETS

APPROVED FOR PUBLICATION

Harold J. Peterfeso — STATE DESIGN ENGINEER
11-10-05 — DATE

Washington State Department of Transportation

EFFECTIVE: APRIL 2, 2007 TO JANUARY 6, 2008
EFFECTIVE: APRIL 2, 2007 TO JANUARY 6, 2008

EFFECTIVE: APRIL 2, 2007 TO JANUARY 6, 2008

EFFECTIVE: APRIL 2, 2007 TO JANUARY 6, 2008

DRAWN BY: ADAM COCHRAN

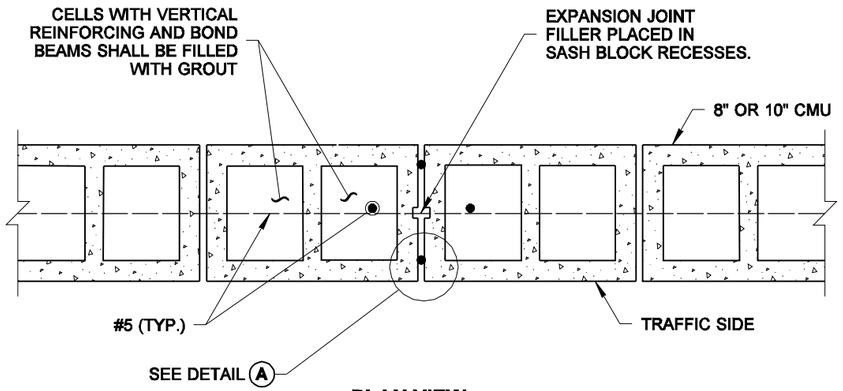

PLAN VIEW

TYPICAL EXPANSION JOINT

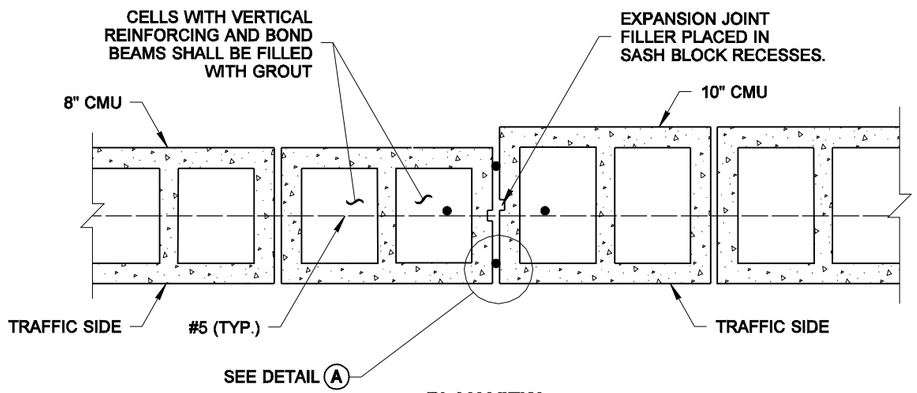

PLAN VIEW

EXPANSION JOINT AT WIDTH STEP

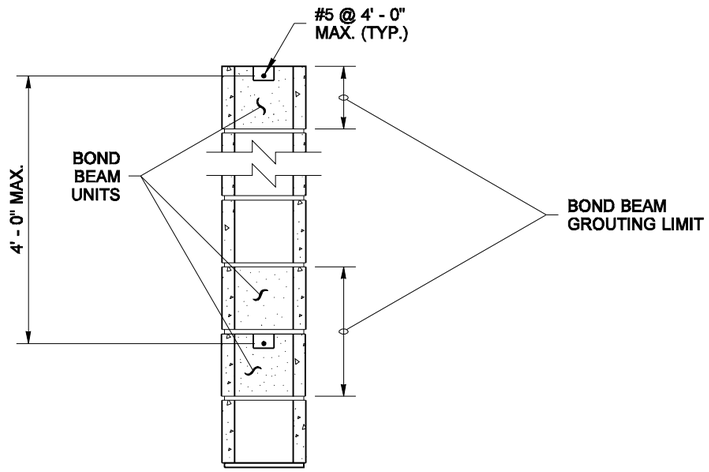

BOND BEAM DETAIL

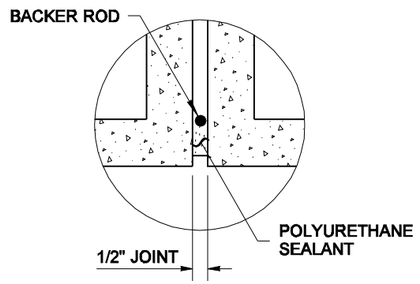

DETAIL A

TYPICAL BOTH SIDES OF WALL

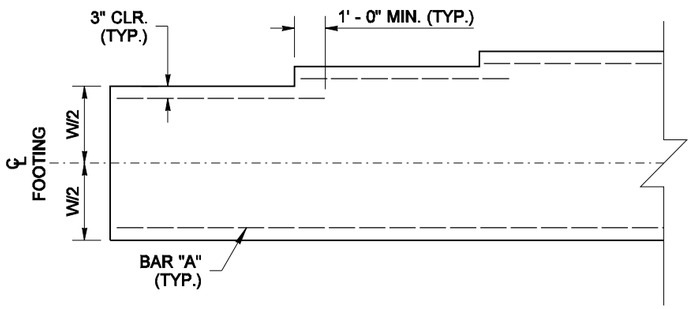

FOOTING WIDTH TRANSITION DETAIL

(FOR LOCATIONS WITHOUT FOOTING STEP)
NOTE: TRANSVERSE BARS NOT SHOWN

MASONRY WALL ON OFFSET SPREAD FOOTING

BIJAN KHALEGHI
STATE OF WASHINGTON
27695
REGISTERED
PROFESSIONAL ENGINEER

EXPIRES AUGUST 23, 2006

NOTE: THIS PLAN IS NOT A LEGAL ENGINEERING DOCUMENT BUT AN ELECTRONIC DUPLICATE. THE ORIGINAL, SIGNED BY THE ENGINEER AND APPROVED FOR PUBLICATION, IS KEPT ON FILE AT THE WASHINGTON STATE DEPARTMENT OF TRANSPORTATION. A COPY MAY BE OBTAINED UPON REQUEST.

NOISE BARRIER WALL TYPE 18

STANDARD PLAN D-2.64-00

SHEET 2 OF 2 SHEETS

APPROVED FOR PUBLICATION

Harold J. Peterfeso — STATE DESIGN ENGINEER

11-10-05 — DATE

Washington State Department of Transportation

EFFECTIVE: APRIL 2, 2007 TO JANUARY 6, 2008

EFFECTIVE: APRIL 2, 2007 TO JANUARY 6, 2008

EFFECTIVE: APRIL 2, 2007 TO JANUARY 6, 2008
EFFECTIVE: APRIL 2, 2007 TO JANUARY 6, 2008

DRAWN BY: ADAM COCHRAN

WALL HT H	TYPE 19A							
	CMU WIDTH	X	BAR "D"	BAR "C"	DIAM.	BAR "P"	DEPTH D1	DEPTH D2
6' - 0"	8"	—	#6 @ 48"	—	12"	6 ~ #5	5' - 3"	4' - 9"
8' - 0"	8"	—	#6 @ 48"	—	12"	6 ~ #5	6' - 0"	5' - 3"
10' - 0"	8"	—	#6 @ 48"	—	12"	6 ~ #5	6' - 9"	5' - 9"
12' - 0"	8"	—	#6 @ 48"	—	12"	6 ~ #5	7' - 3"	6' - 3"
14' - 0"	8"	—	#6 @ 32"	—	12"	6 ~ #6	7' - 9"	6' - 9"
16' - 0"	10"	5' - 4"	#6 @ 32"	—	12"	6 ~ #7	8' - 3"	7' - 0"
18' - 0"	10"	6' - 0"	#6 @ 48"	#6 @ 48"	12"	6 ~ #8	8' - 9"	7' - 6"
20' - 0"	10"	6' - 8"	#6 @ 32"	#6 @ 32"	12"	6 ~ #9	9' - 3"	7' - 9"
22' - 0"	10"	7' - 4"	#6 @ 24"	#6 @ 24"	14"	8 ~ #7	9' - 3"	7' - 9"
24' - 0"	10"	8' - 0"	#6 @ 24"	#6 @ 24"	14"	8 ~ #8	9' - 9"	8' - 3"

WALL HT H	TYPE 19B							
	CMU WIDTH	X	BAR "D"	BAR "C"	DIAM.	BAR "P"	DEPTH D1	DEPTH D2
6' - 0"	8"	—	#6 @ 48"	—	12"	6 ~ #5	6' - 0"	5' - 3"
8' - 0"	8"	—	#6 @ 48"	—	12"	6 ~ #5	7' - 0"	6' - 0"
10' - 0"	8"	—	#6 @ 48"	—	12"	6 ~ #6	7' - 9"	6' - 9"
12' - 0"	10"	4' - 0"	#6 @ 40"	—	12"	6 ~ #7	8' - 6"	7' - 3"
14' - 0"	10"	4' - 8"	#6 @ 32"	#6 @ 32"	14"	8 ~ #7	8' - 6"	7' - 3"
16' - 0"	10"	5' - 4"	#6 @ 24"	#6 @ 24"	14"	8 ~ #7	9' - 3"	8' - 0"
18' - 0"	10"	6' - 0"	#6 @ 16"	#6 @ 16"	16"	6 ~ #8	9' - 3"	8' - 0"
20' - 0"	10"	8' - 0"	#7 @ 16"	#7 @ 32"	16"	8 ~ #7	10' - 0"	8' - 6"
22' - 0"	10"	10' - 0"	#7 @ 16"	#7 @ 24"	16"	8 ~ #8	10' - 6"	9' - 0"
24' - 0"	10"	12' - 0"	#8 @ 16"	#7 @ 16"	16"	8 ~ #8	11' - 3"	9' - 6"

WALL HT H	TYPE 19C							
	CMU WIDTH	X	BAR "D"	BAR "C"	DIAM.	BAR "P"	DEPTH D1	DEPTH D2
6' - 0"	8"	—	#6 @ 48"	—	12"	6 ~ #5	5' - 9"	5' - 0"
8' - 0"	8"	—	#6 @ 48"	—	12"	6 ~ #5	6' - 6"	5' - 6"
10' - 0"	8"	—	#6 @ 48"	—	12"	6 ~ #5	7' - 3"	6' - 3"
12' - 0"	8"	—	#6 @ 40"	—	12"	6 ~ #6	7' - 9"	6' - 9"
14' - 0"	8"	5' - 4"	#6 @ 40"	—	12"	6 ~ #7	8' - 6"	7' - 3"
16' - 0"	10"	5' - 4"	#6 @ 32"	#6 @ 32"	14"	8 ~ #6	8' - 6"	7' - 3"
18' - 0"	10"	6' - 0"	#6 @ 24"	#6 @ 24"	14"	8 ~ #7	9' - 0"	7' - 9"
20' - 0"	10"	6' - 8"	#6 @ 24"	#6 @ 16"	14"	8 ~ #8	9' - 9"	8' - 3"
22' - 0"	10"	7' - 4"	#6 @ 16"	#6 @ 16"	14"	8 ~ #9	10' - 3"	8' - 9"
24' - 0"	10"	8' - 0"	#6 @ 16"	#6 @ 16"	16"	8 ~ #8	10' - 3"	8' - 9"

WALL HT H	TYPE 19D							
	CMU WIDTH	X	BAR "D"	BAR "C"	DIAM.	BAR "P"	DEPTH D1	DEPTH D2
6' - 0"	8"	—	#6 @ 48"	—	12"	6 ~ #5	6' - 6"	5' - 9"
8' - 0"	8"	—	#6 @ 48"	—	12"	6 ~ #6	7' - 6"	6' - 6"
10' - 0"	10"	4' - 0"	#6 @ 24"	—	12"	6 ~ #7	8' - 3"	7' - 0"
12' - 0"	10"	4' - 8"	#6 @ 32"	#6 @ 32"	14"	8 ~ #7	8' - 6"	7' - 3"
14' - 0"	10"	4' - 8"	#6 @ 24"	#6 @ 24"	14"	8 ~ #7	9' - 3"	8' - 0"
16' - 0"	10"	5' - 4"	#6 @ 16"	#6 @ 16"	16"	6 ~ #8	9' - 6"	8' - 0"
18' - 0"	10"	7' - 4"	#7 @ 16"	#7 @ 24"	16"	8 ~ #8	10' - 0"	8' - 6"
20' - 0"	10"	9' - 8"	#8 @ 16"	#7 @ 16"	16"	8 ~ #9	10' - 9"	9' - 3"
22' - 0"	10"	12' - 0"	#8 @ 16"	#7 @ 16"	16"	8 ~ #10	11' - 6"	9' - 9"
24' - 0"	10"	15' - 0"	#8 @ 16"	#7 @ 16"	18"	8 ~ #10	11' - 6"	9' - 9"

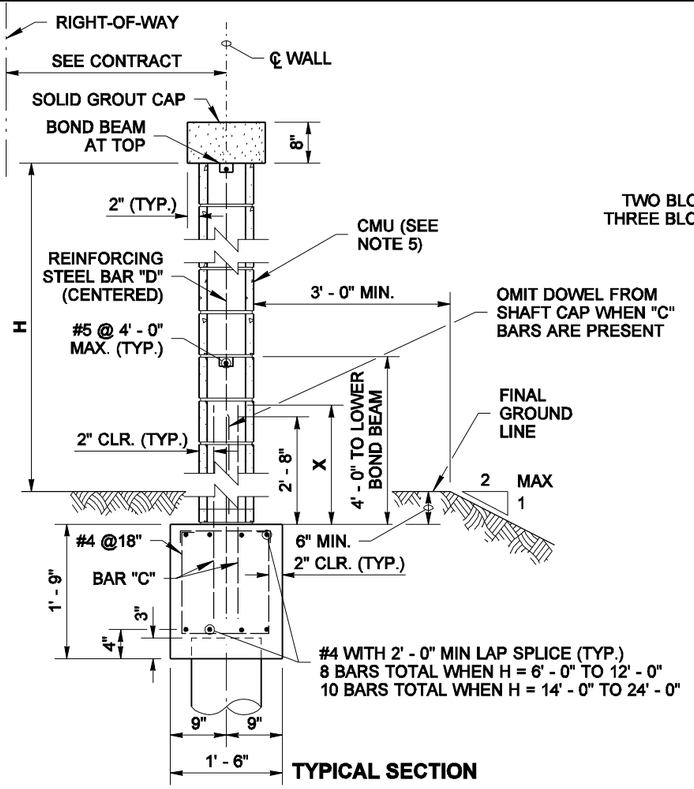

TYPICAL SECTION

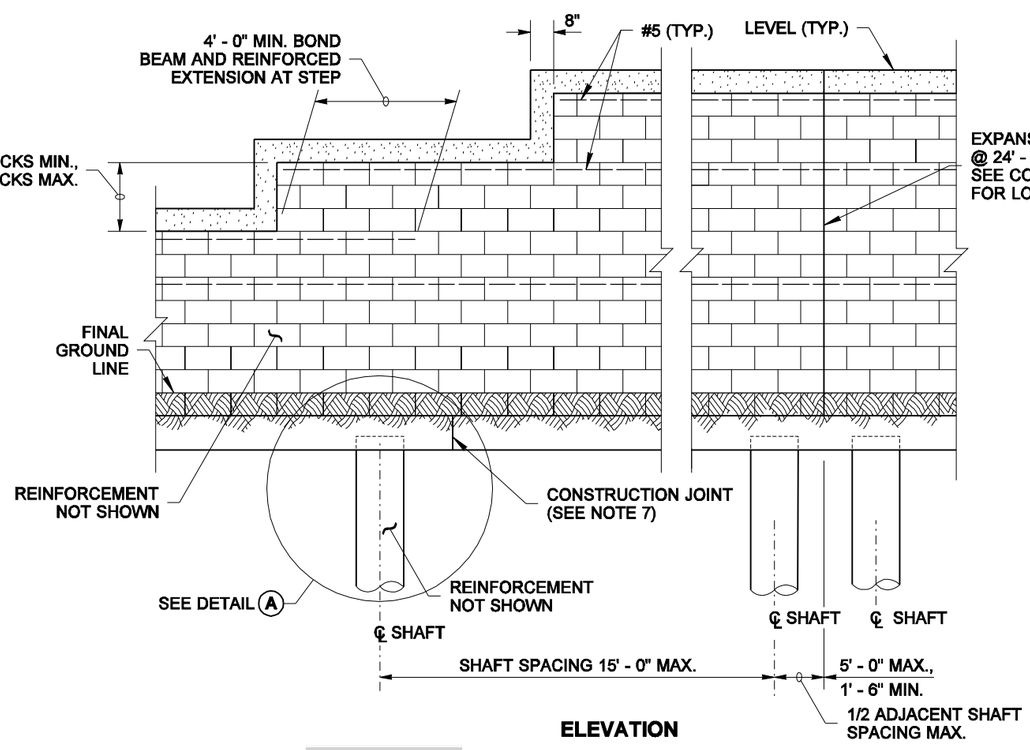

ELEVATION

NOTES

1. Wall to be designated Noise Barrier Wall Type 19A, 19B, 19C, or 19D. The Contract specifies actual wall designations.
2. For intermediate wall heights, use the next higher H.
3. All masonry shall be hollow unit and installed as running bond.
4. All masonry is to be specially inspected.
5. All Concrete Masonry Unit (CMU) cells the have vertical steel reinforcing bars or bond beam units shall be filled with grout.
6. Panels shall have at least 3 feet of level ground on each side.
7. Construction joints in the shaft cap shall be spaced 120 feet maximum.
8. See "Masonry Wall Finishes and Details" sheet for masonry block finishes, special shapes, sizes and layouts.
9. The Contract specifies actual foundation requirements D1 or D2.

SOIL TYPE	
SOIL TYPE	ANGLE OF INTERNAL FRICTION ϕ (DEGREES)
D1	32
D2	38

WIND EXPOSURE & VELOCITY		
NOISE BARRIER TYPE	WIND EXPOSURE	WIND VELOCITY (MPH)
19A	B1	80
19B	B1	90
19C	B2	80
19D	B2	90

MASONRY WALL ON SHAFT W/ GRADE BEAM FOUNDATION

BIJAN KHALEGHI
STATE OF WASHINGTON
27695
REGISTERED
PROFESSIONAL ENGINEER
EXPIRES AUGUST 23, 2006

NOTE: THIS PLAN IS NOT A LEGAL ENGINEERING DOCUMENT BUT AN ELECTRONIC DUPLICATE. THE ORIGINAL, SIGNED BY THE ENGINEER AND APPROVED FOR PUBLICATION, IS KEPT ON FILE AT THE WASHINGTON STATE DEPARTMENT OF TRANSPORTATION. A COPY MAY BE OBTAINED UPON REQUEST.

NOISE BARRIER WALL TYPE 19

STANDARD PLAN D-2.66-00

SHEET 1 OF 2 SHEETS

APPROVED FOR PUBLICATION

Harold J. Peterfeso — STATE DESIGN ENGINEER
11-10-05 — DATE

Washington State Department of Transportation

EFFECTIVE: APRIL 2, 2007 TO JANUARY 6, 2008
EFFECTIVE: APRIL 2, 2007 TO JANUARY 6, 2008

EFFECTIVE: APRIL 2, 2007 TO JANUARY 6, 2008

DRAWN BY: ADAM COCHRAN

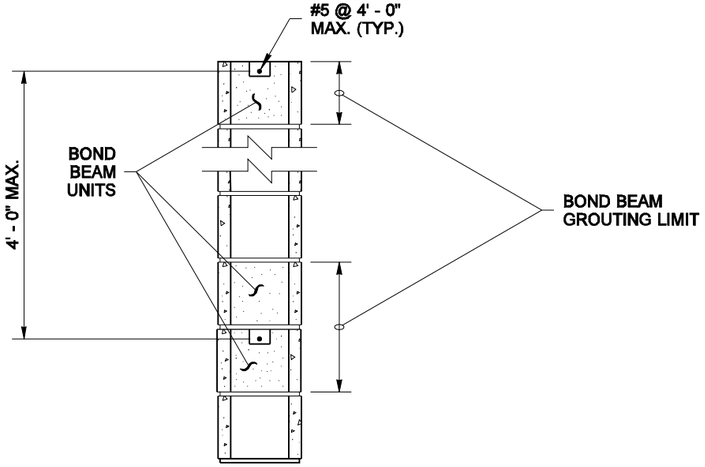

BOND BEAM DETAIL

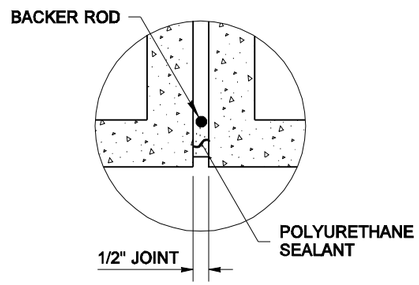

DETAIL (B)

TYPICAL BOTH SIDES OF WALL

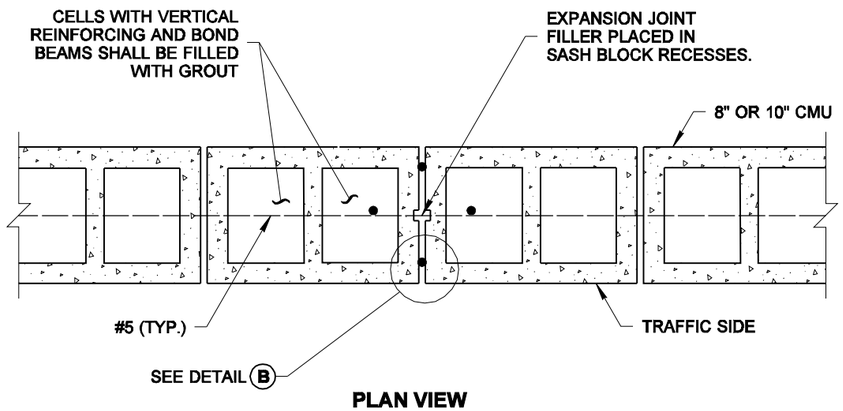

PLAN VIEW

TYPICAL EXPANSION JOINT

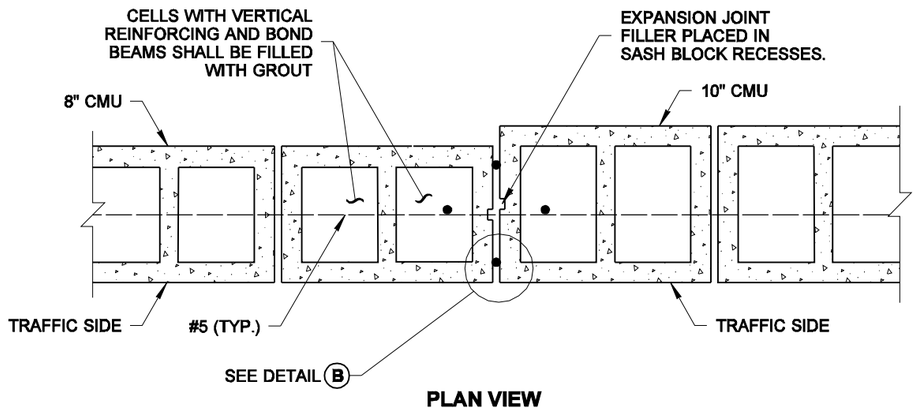

PLAN VIEW

EXPANSION JOINT AT WIDTH STEP

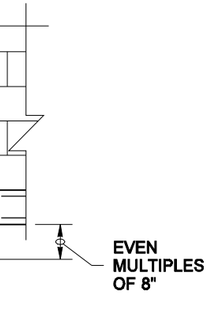

STEP DETAIL

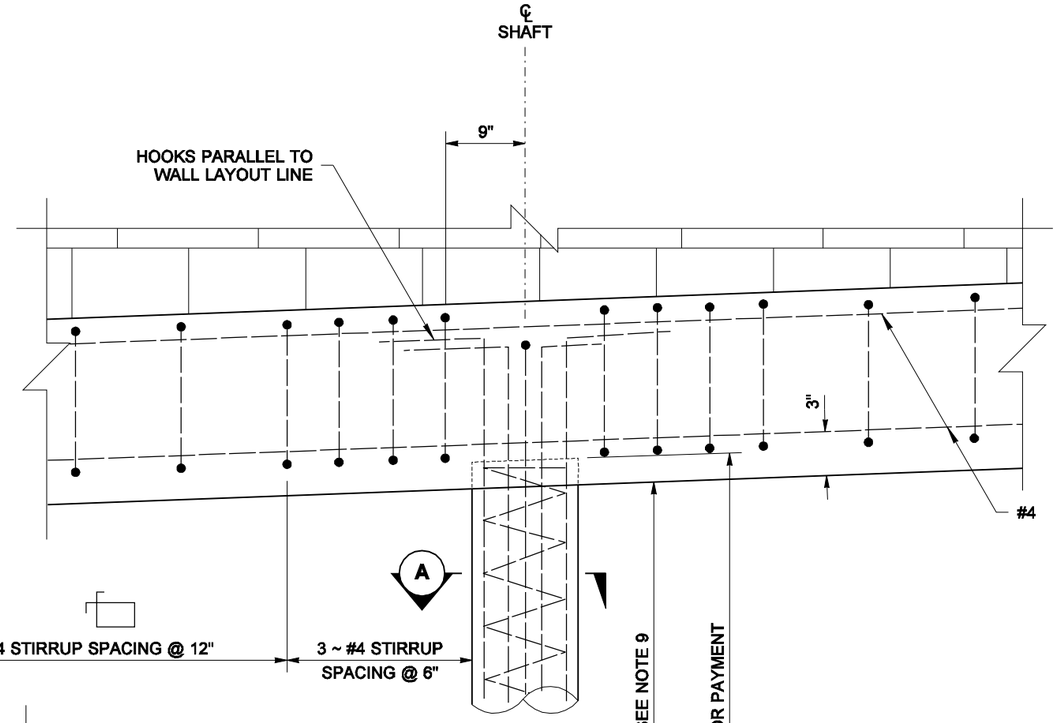

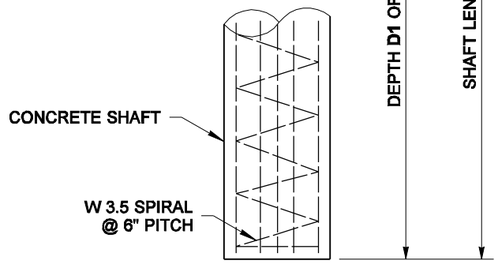

DETAIL (A)

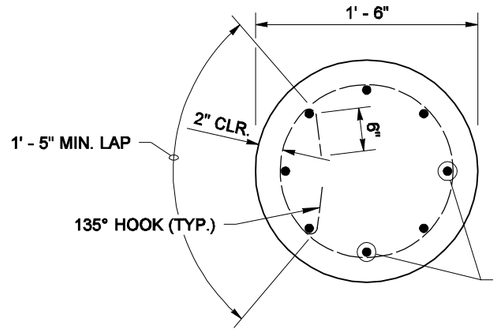

SECTION (A)

NOTE
SPIRAL REINFORCEMENT SHALL BE LAPPED AS SHOWN TO TERMINATE THE ENDS OF THE SPIRAL REINFORCEMENT (TOP AND BOTTOM).

MASONRY WALL ON SHAFT W/ GRADE BEAM FOUNDATION

BIJAN KHALEGHI
STATE OF WASHINGTON
27695
REGISTERED
PROFESSIONAL ENGINEER

EXPIRES AUGUST 23, 2006

NOTE: THIS PLAN IS NOT A LEGAL ENGINEERING DOCUMENT BUT AN ELECTRONIC DUPLICATE. THE ORIGINAL, SIGNED BY THE ENGINEER AND APPROVED FOR PUBLICATION, IS KEPT ON FILE AT THE WASHINGTON STATE DEPARTMENT OF TRANSPORTATION. A COPY MAY BE OBTAINED UPON REQUEST.

NOISE BARRIER WALL TYPE 19

STANDARD PLAN D-2.66-00

SHEET 2 OF 2 SHEETS

APPROVED FOR PUBLICATION

Harold J. Peterfeso — STATE DESIGN ENGINEER
11-10-05 — DATE

Washington State Department of Transportation

EFFECTIVE: APRIL 2, 2007 TO JANUARY 6, 2008

EFFECTIVE: APRIL 2, 2007 TO JANUARY 6, 2008

EFFECTIVE: APRIL 2, 2007 TO JANUARY 6, 2008

DRAWN BY: ADAM COCHRAN

WIND EXPOSURE & VELOCITY		
NOISE BARRIER TYPE	WIND EXPOSURE	WIND VELOCITY (MPH)
20A	B1	80
20B	B1	90
20C	B2	80
20D	B2	90

SOIL TYPE	
SOIL TYPE	ANGLE OF INTERNAL FRICTION ϕ (DEGREES)
D1	32
D2	38

TIE SPACING	
BAR "A" SIZE	SPACING
#4	6" O.C.
#5	6" O.C.
#6	5" O.C.
#7, #8, #9, #10	4" O.C.

TYPE 20A						
WALL HT H	DEPTH D1	DEPTH D2	BAR "A"	BAR "B"	BAR "C"	PILASTER SPACING L
6' - 0"	5' - 6"	5' - 0"	6 ~ #6	4 ~ #4	#5 @ 32"	16' - 0"
8' - 0"	6' - 6"	5' - 6"	6 ~ #6	4 ~ #4	#5 @ 32"	16' - 0"
10' - 0"	7' - 0"	6' - 0"	6 ~ #6	4 ~ #4	#5 @ 32"	16' - 0"
12' - 0"	7' - 9"	6' - 6"	6 ~ #6	4 ~ #5	#5 @ 32"	16' - 0"
14' - 0"	8' - 3"	7' - 0"	6 ~ #6	4 ~ #5	#5 @ 32"	16' - 0"
16' - 0"	9' - 0"	7' - 6"	6 ~ #6	4 ~ #6	#5 @ 32"	16' - 0"
18' - 0"	9' - 6"	8' - 0"	6 ~ #6	4 ~ #7	#5 @ 32"	16' - 0"
20' - 0"	10' - 3"	8' - 6"	6 ~ #6	6 ~ #7	#5 @ 32"	16' - 0"
22' - 0"	10' - 9"	9' - 0"	6 ~ #6	6 ~ #8	#5 @ 32"	16' - 0"
24' - 0"	11' - 3"	9' - 6"	6 ~ #6	6 ~ #9	#5 @ 32"	16' - 0"

TYPE 20B						
WALL HT H	DEPTH D1	DEPTH D2	BAR "A"	BAR "B"	BAR "C"	PILASTER SPACING L
6' - 0"	6' - 6"	5' - 9"	6 ~ #6	4 ~ #4	#5 @ 32"	16' - 0"
8' - 0"	7' - 6"	6' - 6"	6 ~ #6	4 ~ #4	#5 @ 32"	16' - 0"
10' - 0"	8' - 6"	7' - 0"	6 ~ #6	4 ~ #5	#5 @ 32"	16' - 0"
12' - 0"	9' - 3"	7' - 9"	6 ~ #6	4 ~ #6	#5 @ 32"	16' - 0"
14' - 0"	10' - 0"	8' - 6"	6 ~ #6	4 ~ #7	#5 @ 32"	16' - 0"
16' - 0"	11' - 0"	9' - 0"	6 ~ #6	6 ~ #8	#5 @ 32"	16' - 0"
18' - 0"	11' - 9"	9' - 9"	6 ~ #6	6 ~ #9	#5 @ 32"	16' - 0"
20' - 0"	12' - 6"	10' - 3"	6 ~ #7	6 ~ #10	#5 @ 32"	16' - 0"
22' - 0"	12' - 6"	10' - 3"	6 ~ #7	6 ~ #10	#5 @ 32"	16' - 0"
24' - 0"	12' - 6"	10' - 3"	6 ~ #7	6 ~ #10	#5 @ 32"	12' - 0"

TYPE 20C						
WALL HT H	DEPTH D1	DEPTH D2	BAR "A"	BAR "B"	BAR "C"	PILASTER SPACING L
6' - 0"	6' - 3"	5' - 3"	6 ~ #6	4 ~ #4	#6 @ 32"	16' - 0"
8' - 0"	7' - 0"	6' - 0"	6 ~ #6	4 ~ #4	#6 @ 32"	16' - 0"
10' - 0"	7' - 9"	6' - 6"	6 ~ #6	4 ~ #5	#6 @ 32"	16' - 0"
12' - 0"	8' - 6"	7' - 3"	6 ~ #6	4 ~ #5	#6 @ 32"	16' - 0"
14' - 0"	9' - 3"	7' - 9"	6 ~ #6	4 ~ #6	#6 @ 32"	16' - 0"
16' - 0"	10' - 0"	8' - 3"	6 ~ #6	4 ~ #7	#6 @ 32"	16' - 0"
18' - 0"	10' - 9"	9' - 0"	6 ~ #6	6 ~ #7	#6 @ 32"	16' - 0"
20' - 0"	11' - 3"	9' - 6"	6 ~ #6	6 ~ #8	#6 @ 32"	16' - 0"
22' - 0"	12' - 0"	10' - 0"	6 ~ #7	6 ~ #9	#6 @ 32"	16' - 0"
24' - 0"	12' - 9"	10' - 6"	6 ~ #7	6 ~ #10	#6 @ 32"	16' - 0"

TYPE 20D						
WALL HT H	DEPTH D1	DEPTH D2	BAR "A"	BAR "B"	BAR "C"	PILASTER SPACING L
6' - 0"	7' - 0"	6' - 0"	6 ~ #6	4 ~ #4	#6 @ 32"	16' - 0"
8' - 0"	8' - 3"	7' - 0"	6 ~ #6	4 ~ #5	#6 @ 32"	16' - 0"
10' - 0"	9' - 3"	7' - 9"	6 ~ #6	4 ~ #6	#6 @ 32"	16' - 0"
12' - 0"	10' - 3"	8' - 6"	6 ~ #6	4 ~ #7	#6 @ 32"	16' - 0"
14' - 0"	11' - 0"	9' - 3"	6 ~ #6	6 ~ #8	#6 @ 32"	16' - 0"
16' - 0"	12' - 0"	9' - 9"	6 ~ #6	6 ~ #9	#6 @ 32"	16' - 0"
18' - 0"	12' - 9"	10' - 6"	6 ~ #7	6 ~ #10	#6 @ 32"	16' - 0"
20' - 0"	13' - 0"	10' - 6"	6 ~ #7	6 ~ #10	#6 @ 32"	14' - 0"
22' - 0"	13' - 0"	10' - 6"	6 ~ #8	6 ~ #10	#6 @ 32"	12' - 0"
24' - 0"	13' - 6"	11' - 3"	6 ~ #8	6 ~ #10	#6 @ 32"	12' - 0"

CMU = CONCRETE MASONRY UNIT

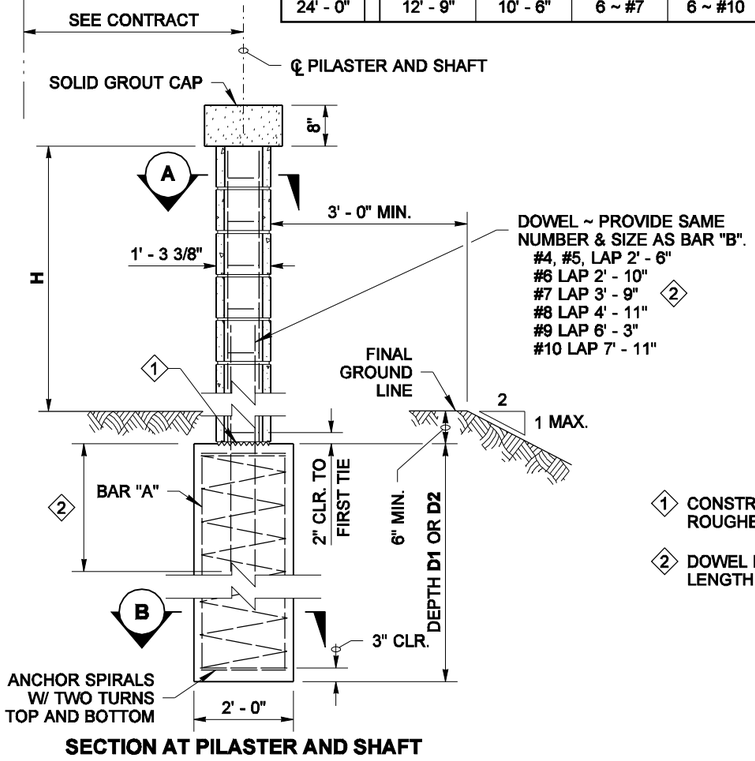

SECTION AT PILASTER AND SHAFT

1. CONSTRUCTION JOINT WITH ROUGHENED SURFACE
2. DOWEL EMBEDMENT LENGTH = 40 x BAR "B" DIAM.

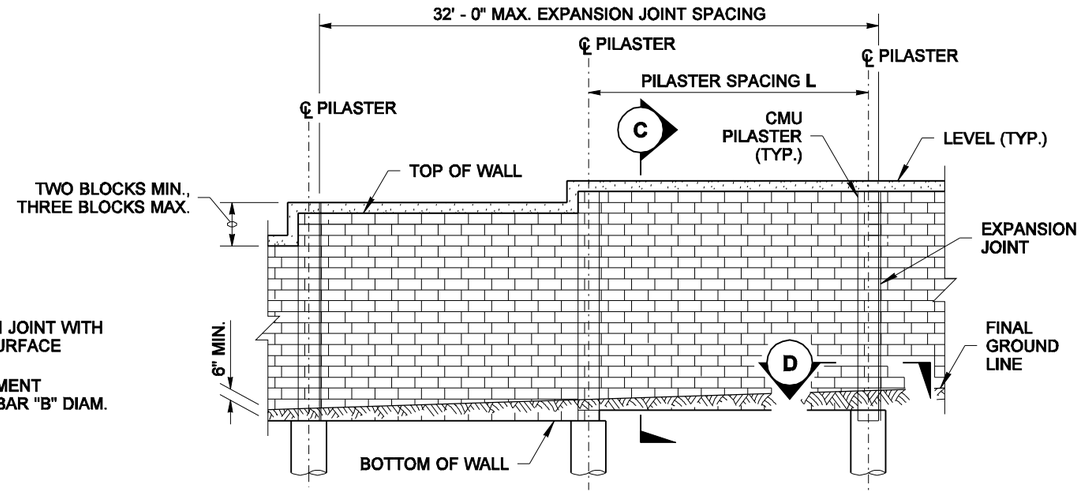

ELEVATION

NOTES

1. Wall to be designated Noise Barrier Wall Type 20A, 20B, 20C, or 20D. The Contract specifies actual wall designations.
2. For intermediate wall heights, use the next higher H.
3. All masonry shall be hollow unit and installed as running bond.
4. All masonry is to be specially inspected.
5. All Concrete Masonry Unit (CMU) cells that have vertical steel reinforcing bars or bond beam units shall be filled with grout.
6. Panels shall have at least 3 feet of level ground on each side.
7. See "Masonry Wall Finishes and Details" sheet for masonry block finishes, special shapes, sizes and layouts.
8. The Contract specifies actual foundation requirements D1 or D2.

MASONRY WALL ON SHAFT FOUNDATION

BIJAN KHALEGHI
STATE OF WASHINGTON
27695
REGISTERED
PROFESSIONAL ENGINEER

EXPIRES AUGUST 23, 2006

NOTE: THIS PLAN IS NOT A LEGAL ENGINEERING DOCUMENT BUT AN ELECTRONIC DUPLICATE. THE ORIGINAL, SIGNED BY THE ENGINEER AND APPROVED FOR PUBLICATION, IS KEPT ON FILE AT THE WASHINGTON STATE DEPARTMENT OF TRANSPORTATION. A COPY MAY BE OBTAINED UPON REQUEST.

NOISE BARRIER WALL TYPE 20

STANDARD PLAN D-2.68-00

SHEET 1 OF 2 SHEETS

APPROVED FOR PUBLICATION

Harold J. Peterfeso — STATE DESIGN ENGINEER

11-10-05 — DATE

Washington State Department of Transportation

EFFECTIVE: APRIL 2, 2007 TO JANUARY 6, 2008

EFFECTIVE: APRIL 2, 2007 TO JANUARY 6, 2008

EFFECTIVE: APRIL 2, 2007 TO JANUARY 6, 2008

DRAWN BY: ADAM COCHRAN

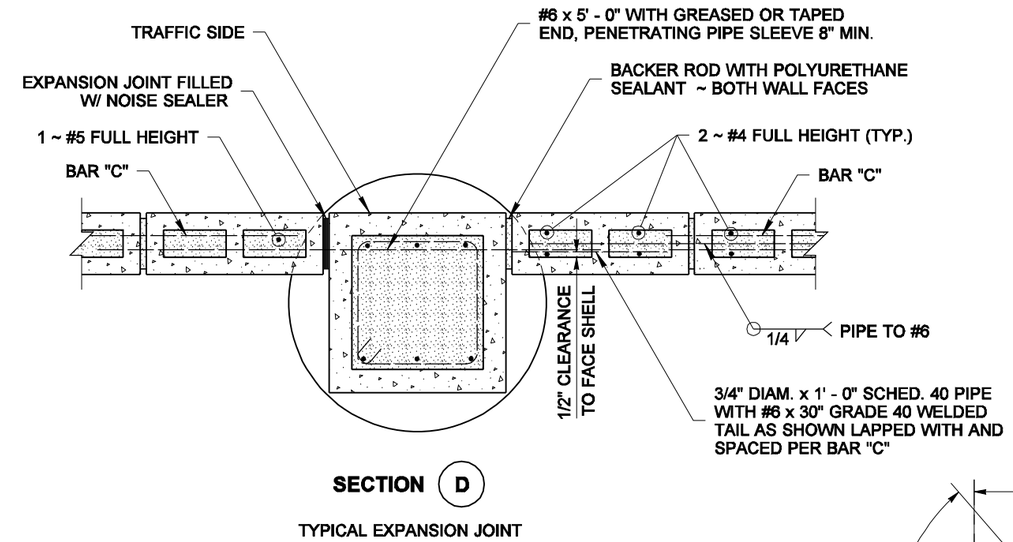

SECTION (D)

TYPICAL EXPANSION JOINT

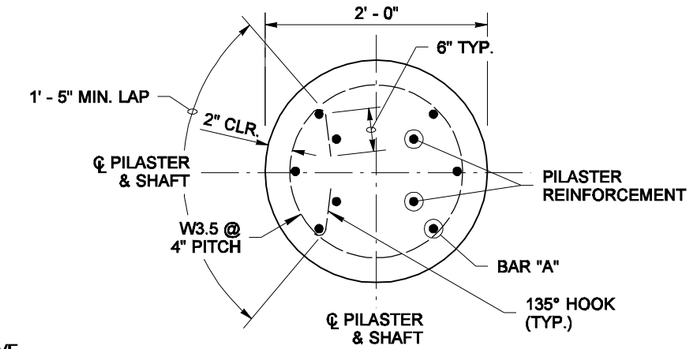

SECTION (B)

NOTE
SPIRAL REINFORCEMENT SHALL BE LAPPED 17" MIN. A 135° HOOK THAT IS HOOKED AROUND A LONGITUDINAL BAR SHALL BE USED TO TERMINATE THE ENDS OF THE SPIRAL REINFORCEMENT AT LAPPED SPLICES AND AT THE TOP AND BOTTOM OF SHAFT.

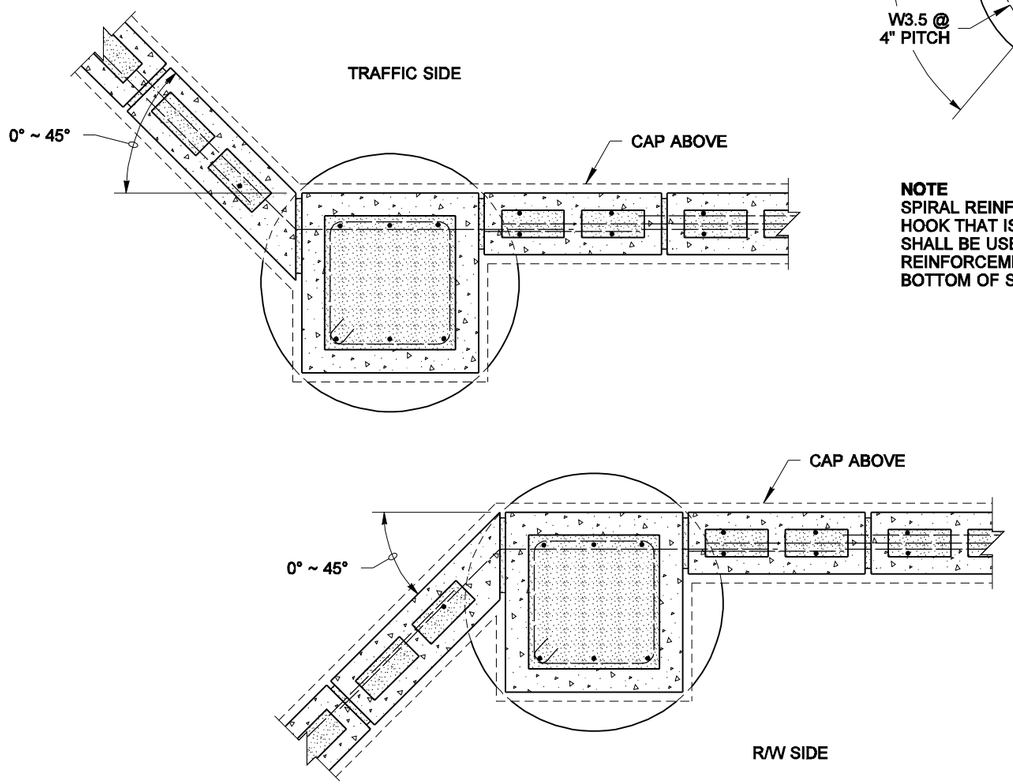

ANGLE POINT PLAN

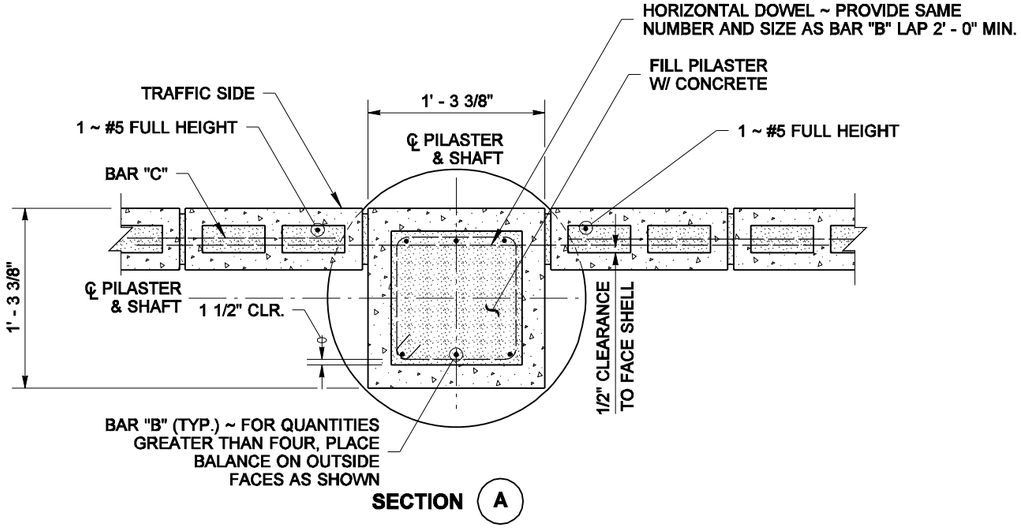

SECTION (A)

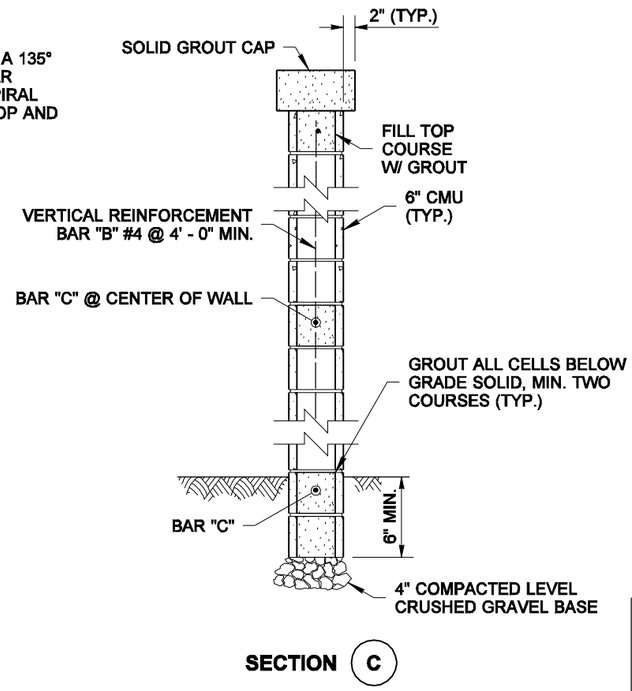

SECTION (C)

MASONRY WALL ON SHAFT FOUNDATION

BIJAN KHALEGHI
STATE OF WASHINGTON
27695
REGISTERED
PROFESSIONAL ENGINEER

EXPIRES AUGUST 23, 2006

NOTE: THIS PLAN IS NOT A LEGAL ENGINEERING DOCUMENT BUT AN ELECTRONIC DUPLICATE. THE ORIGINAL, SIGNED BY THE ENGINEER AND APPROVED FOR PUBLICATION, IS KEPT ON FILE AT THE WASHINGTON STATE DEPARTMENT OF TRANSPORTATION. A COPY MAY BE OBTAINED UPON REQUEST.

NOISE BARRIER WALL TYPE 20

STANDARD PLAN D-2.68-00

SHEET 2 OF 2 SHEETS

APPROVED FOR PUBLICATION

Harold J. Peterfeso — STATE DESIGN ENGINEER — *11-10-05* — DATE

Washington State Department of Transportation

EFFECTIVE: APRIL 2, 2007 TO JANUARY 6, 2008

EFFECTIVE: APRIL 2, 2007 TO JANUARY 6, 2008
EFFECTIVE: APRIL 2, 2007 TO JANUARY 6, 2008

DRAWN BY: ADAM COCHRAN

WALL HT H	TYPE 15A				TYPE 15B				TYPE 15C				TYPE 15D			
	DEPTH D1	DEPTH D2	GLULAM t	PLYWOOD t	DEPTH D1	DEPTH D2	GLULAM t	PLYWOOD t	DEPTH D1	DEPTH D2	GLULAM t	PLYWOOD t	DEPTH D1	DEPTH D2	GLULAM t	PLYWOOD t
6' - 0"	3' - 3"	3' - 0"	1"	1 1/4"	3' - 9"	3' - 6"	1 1/4"	1 1/2"	3' - 6"	3' - 3"	1 1/8"	1 3/8"	4' - 0"	3' - 6"	1 1/2"	1 5/8"
8' - 0"	3' - 6"	3' - 3"	1 1/4"	1 3/8"	4' - 0"	3' - 9"	1 5/8"	1 7/8"	3' - 9"	3' - 6"	1 3/8"	1 5/8"	4' - 3"	3' - 9"	1 7/8"	2 1/8"
10' - 0"	4' - 0"	3' - 6"	1 1/2"	1 5/8"	4' - 6"	4' - 0"	1 7/8"	2 1/4"	4' - 0"	3' - 9"	1 5/8"	2"	4' - 6"	4' - 0"	2 1/4"	2 1/2"
12' - 0"	4' - 3"	3' - 9"	1 5/8"	2"	4' - 9"	4' - 3"	2 1/4"	2 5/8"	4' - 6"	4' - 0"	2"	2 1/4"	4' - 9"	4' - 3"	2 1/2"	3"
14' - 0"	4' - 6"	4' - 0"	2"	2 1/4"	5' - 0"	4' - 6"	2 1/2"	3"	4' - 9"	4' - 3"	2 1/4"	2 5/8"	5' - 3"	4' - 9"	2 7/8"	3 3/8"
16' - 0"	4' - 9"	4' - 0"	2 1/4"	2 1/2"	5' - 3"	4' - 9"	2 7/8"	3 1/4"	5' - 0"	4' - 6"	2 1/2"	3"	5' - 6"	5' - 0"	3 1/4"	3 3/4"
18' - 0"	5' - 0"	4' - 3"	2 1/2"	2 7/8"	5' - 6"	5' - 0"	3 1/4"	3 5/8"	5' - 3"	4' - 9"	2 7/8"	3 1/4"	6' - 0"	5' - 3"	3 5/8"	4 1/4"

NOTES

1. Wall to be designated Noise Barrier Wall Type 15A, 15B, 15C or 15D. The Contract specifies actual wall designations.
2. For intermediate wall heights not listed use the next higher H.
3. Panels shall have at least 3 feet of level ground on each side.
4. Plywood and Glulam panels and all lumber shall be pressure preservative treated.
5. The Contract shall specify actual foundation requirements D1 or D2.

WIND EXPOSURE & VELOCITY		
NOISE BARRIER TYPE	WIND EXPOSURE	WIND VELOCITY (MPH)
15A	B1	80
15B	B1	90
15C	B2	80
15D	B2	90

SOIL TYPE	
SOIL TYPE	ANGLE OF INTERNAL FRICTION ϕ (DEGREES)
D1	32
D2	38

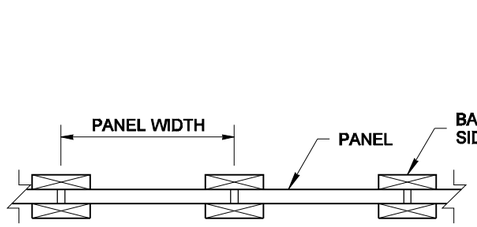

PLAN

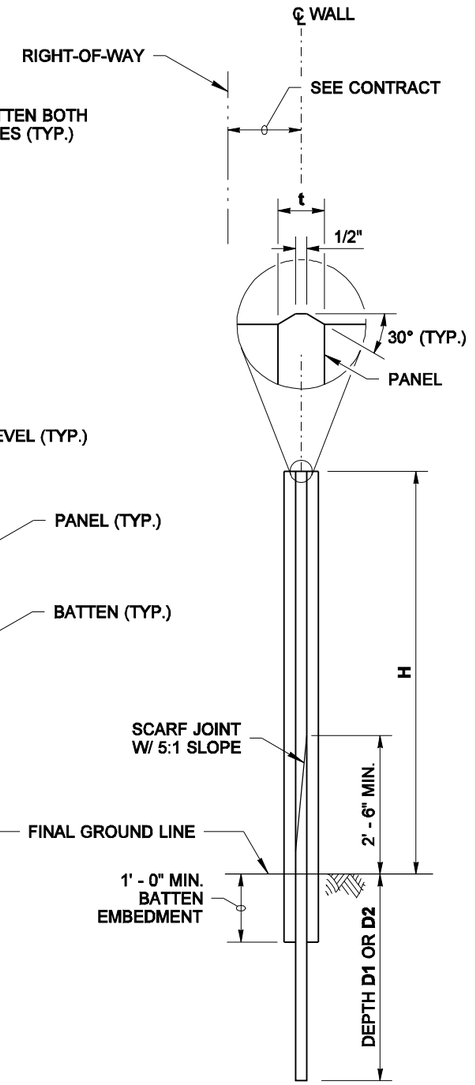

ELEVATION **TYPICAL SECTION**

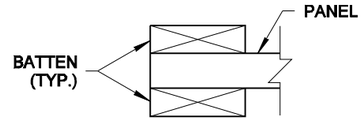

SECTION (A)

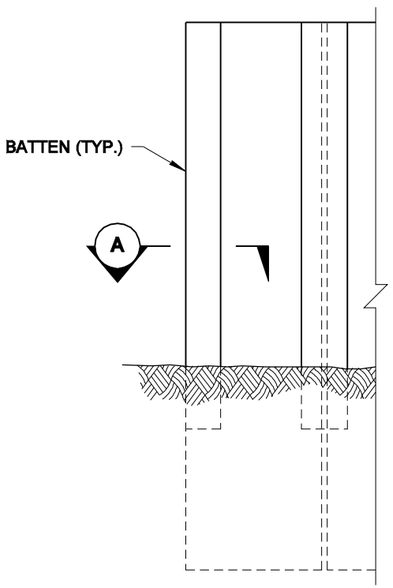

ELEVATION END DETAIL

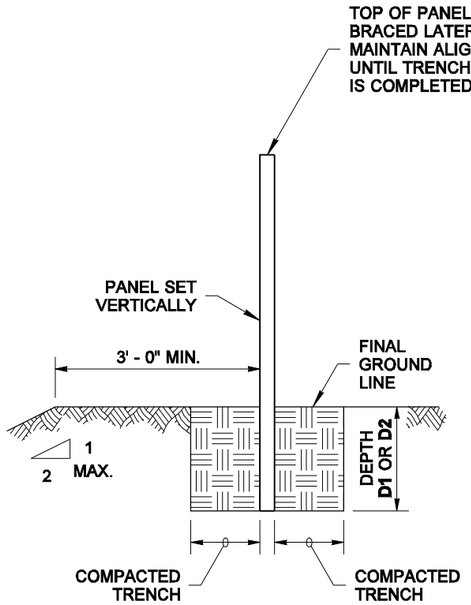

TRENCH FOOTING

TIMBER PANEL WALL ON TRENCH FOOTING

BIJAN KHALEGHI
STATE OF WASHINGTON
27695
REGISTERED
PROFESSIONAL ENGINEER

EXPIRES AUGUST 23, 2006

NOTE: THIS PLAN IS NOT A LEGAL ENGINEERING DOCUMENT BUT AN ELECTRONIC DUPLICATE. THE ORIGINAL, SIGNED BY THE ENGINEER AND APPROVED FOR PUBLICATION, IS KEPT ON FILE AT THE WASHINGTON STATE DEPARTMENT OF TRANSPORTATION. A COPY MAY BE OBTAINED UPON REQUEST.

NOISE BARRIER WALL TYPE 15

STANDARD PLAN D-2.78-00

SHEET 1 OF 1 SHEET

APPROVED FOR PUBLICATION

Harold J. Peterfeso — STATE DESIGN ENGINEER — *11-10-05* — DATE

Washington State Department of Transportation

EFFECTIVE: APRIL 2, 2007 TO JANUARY 6, 2008
EFFECTIVE: APRIL 2, 2007 TO JANUARY 6, 2008

EFFECTIVE: APRIL 2, 2007 TO JANUARY 6, 2008

DRAWN BY: ADAM COCHRAN

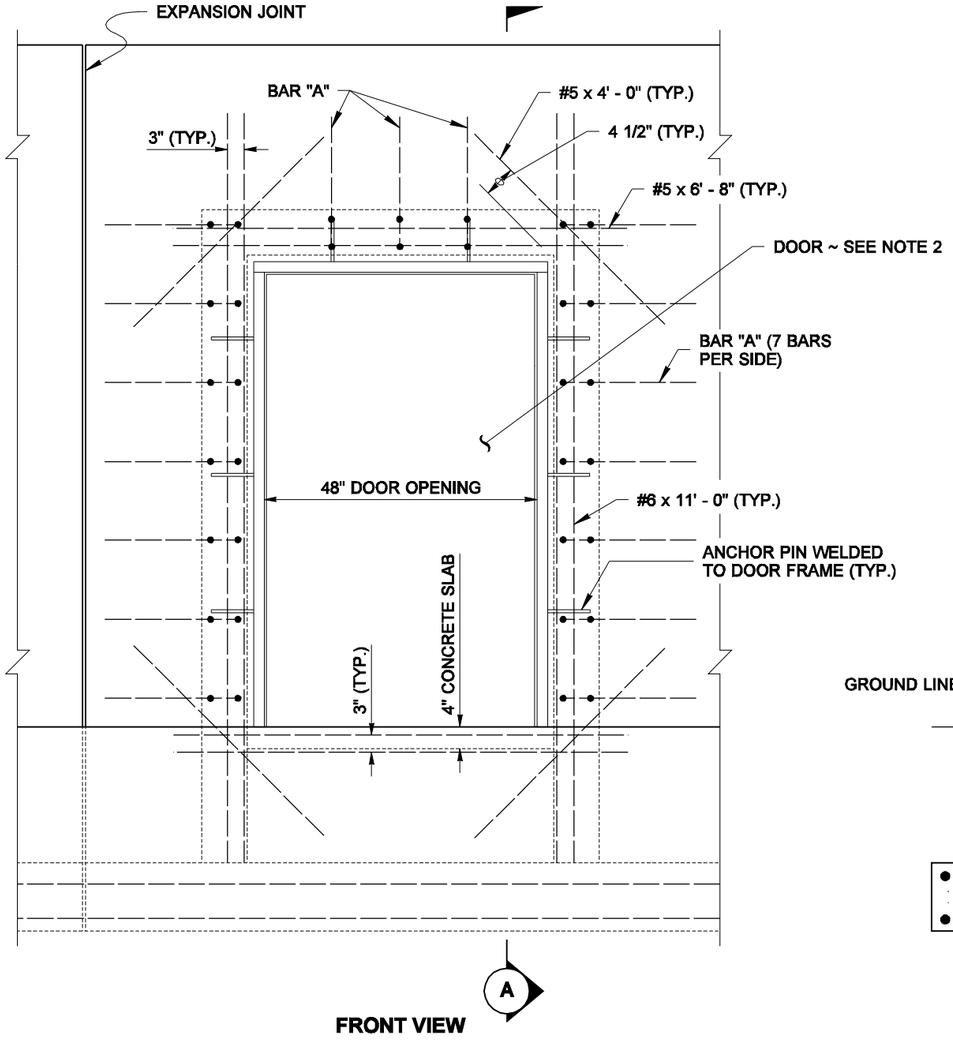

FRONT VIEW

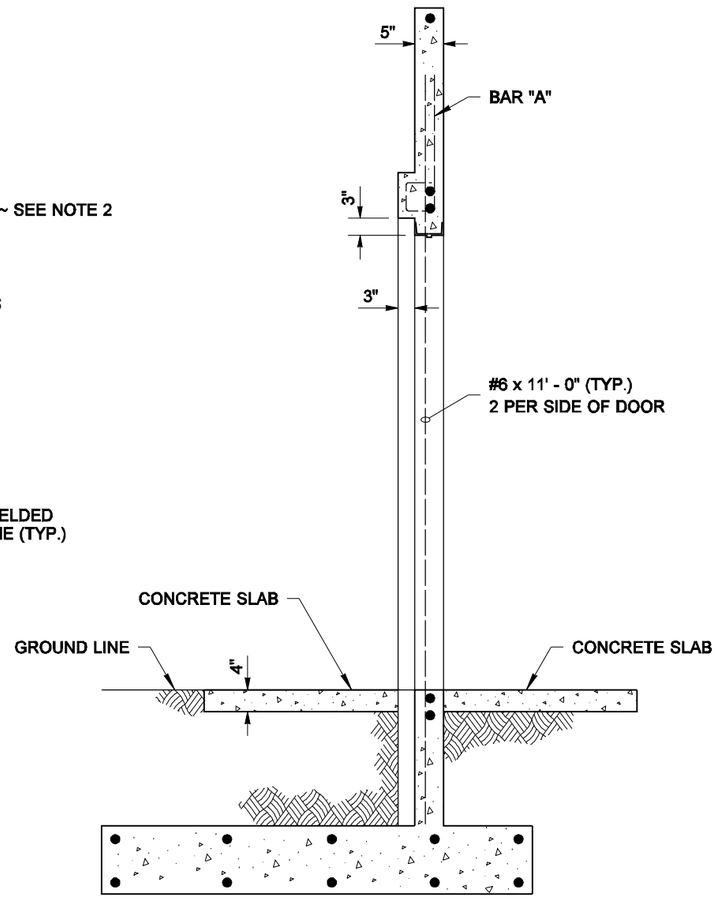

A SECTION

ISOMETRIC CUTAWAY VIEW

NOTES

1. All rebar shall have a minimum 1 1/2" cover.
2. See Standard Plan D-2.92 for door and frame details.
3. See Standard Plan D-2.06 for wall reinforcement not shown.

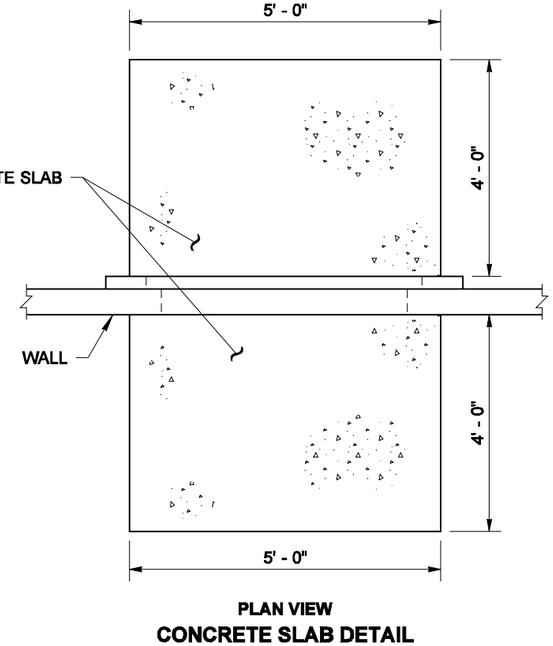

PLAN VIEW

CONCRETE SLAB DETAIL

BENDING DIAGRAM

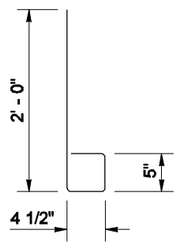

BAR "A"

FOR CAST-IN-PLACE WALL ON OFFSET SPREAD FOOTING

BIJAN KHALEGHI
STATE OF WASHINGTON
27695
REGISTERED
PROFESSIONAL ENGINEER
EXPIRES AUGUST 23, 2006

NOTE: THIS PLAN IS NOT A LEGAL ENGINEERING DOCUMENT BUT AN ELECTRONIC DUPLICATE. THE ORIGINAL, SIGNED BY THE ENGINEER AND APPROVED FOR PUBLICATION, IS KEPT ON FILE AT THE WASHINGTON STATE DEPARTMENT OF TRANSPORTATION. A COPY MAY BE OBTAINED UPON REQUEST.

NOISE BARRIER WALL ACCESS DOOR TYPE 1

STANDARD PLAN D-2.80-00

SHEET 1 OF 1 SHEET

APPROVED FOR PUBLICATION

Harold J. Peterfeso — STATE DESIGN ENGINEER — *11-10-05* — DATE

Washington State Department of Transportation

EFFECTIVE: APRIL 2, 2007 TO JANUARY 6, 2008

EFFECTIVE: APRIL 2, 2007 TO JANUARY 6, 2008

DRAWN BY: ADAM COCHRAN

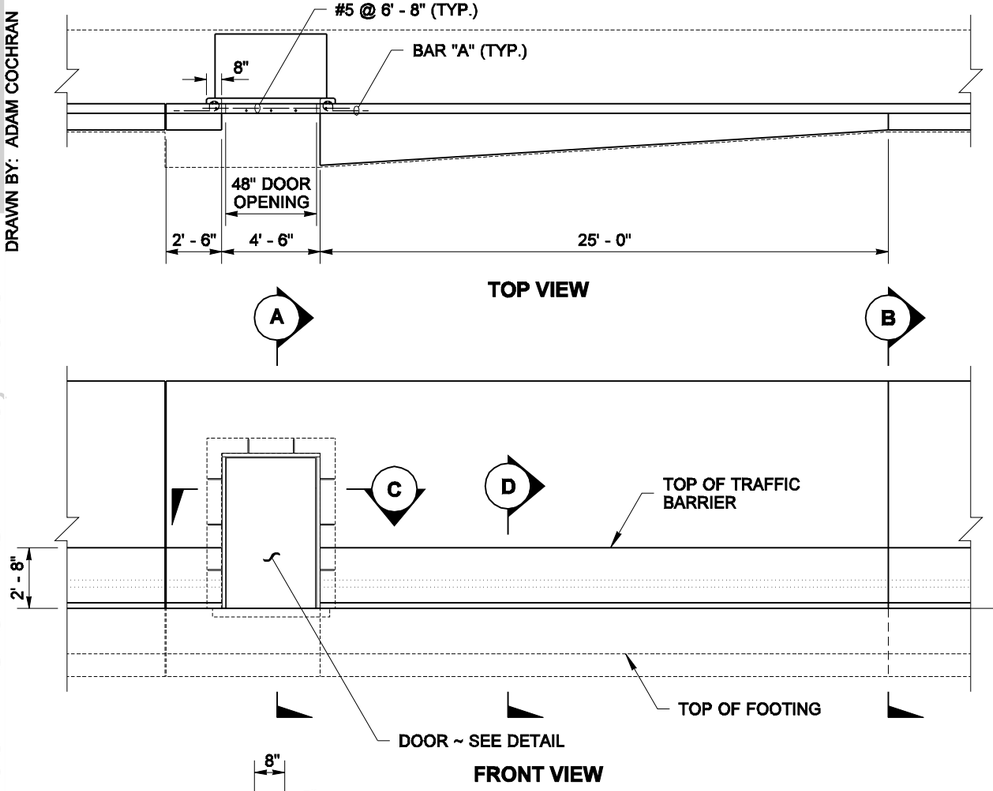

TOP VIEW

FRONT VIEW

SECTION A

1 USE SPACING IN WALL PLAN PER WALL HEIGHT

SECTION B

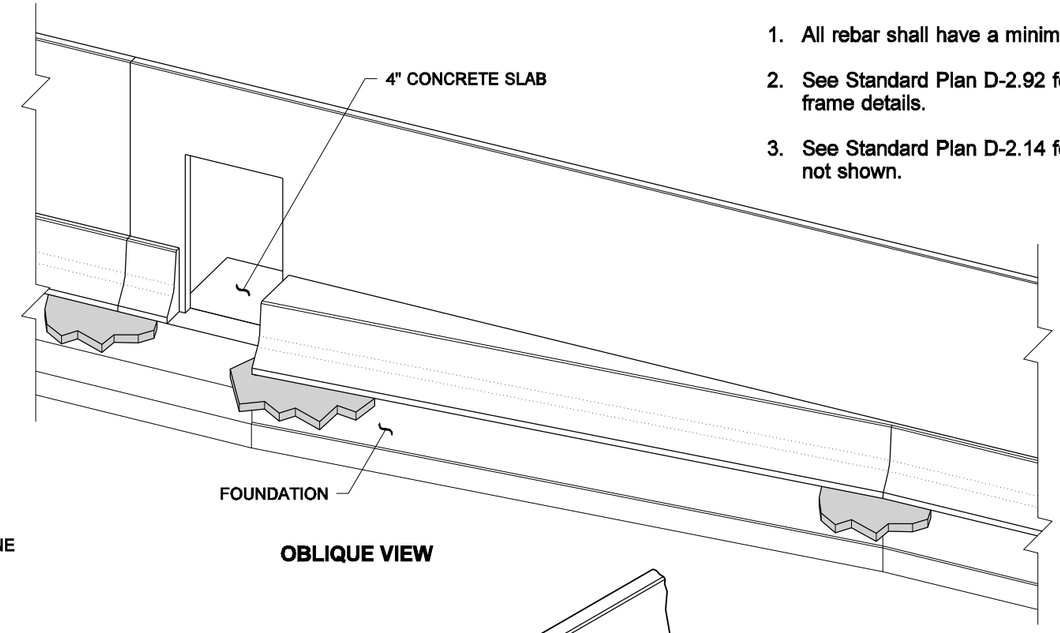

OBLIQUE VIEW

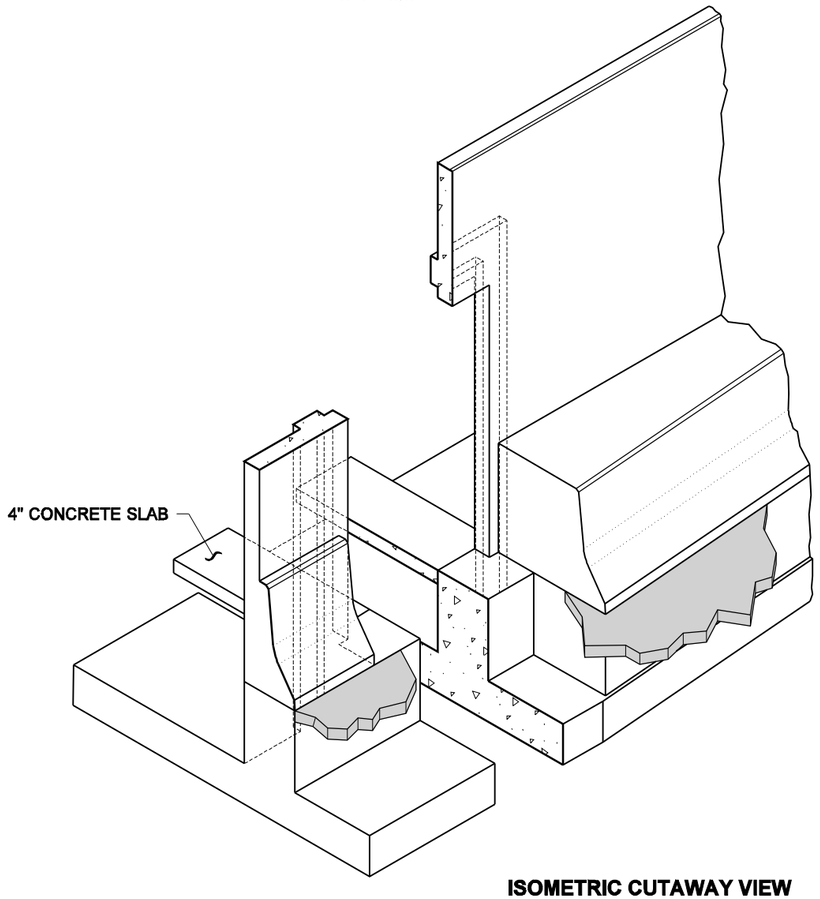

ISOMETRIC CUTAWAY VIEW

NOTES

1. All rebar shall have a minimum 1 1/2" cover.
2. See Standard Plan D-2.92 for door and frame details.
3. See Standard Plan D-2.14 for wall reinforcement not shown.

FOR CAST-IN-PLACE WALL W/ TRAFFIC BARRIER

BIJAN KHALEGHI
STATE OF WASHINGTON
27695
REGISTERED
PROFESSIONAL ENGINEER

EXPIRES AUGUST 23, 2006

NOTE: THIS PLAN IS NOT A LEGAL ENGINEERING DOCUMENT BUT AN ELECTRONIC DUPLICATE. THE ORIGINAL, SIGNED BY THE ENGINEER AND APPROVED FOR PUBLICATION, IS KEPT ON FILE AT THE WASHINGTON STATE DEPARTMENT OF TRANSPORTATION. A COPY MAY BE OBTAINED UPON REQUEST.

NOISE BARRIER WALL ACCESS DOOR TYPE 2

STANDARD PLAN D-2.82-00

SHEET 1 OF 2 SHEETS

APPROVED FOR PUBLICATION

Harold J. Peterfeso — STATE DESIGN ENGINEER

11-10-05 — DATE

Washington State Department of Transportation

EFFECTIVE: APRIL 2, 2007 TO JANUARY 6, 2008

EFFECTIVE: APRIL 2, 2007 TO JANUARY 6, 2008

DRAWN BY: ADAM COCHRAN

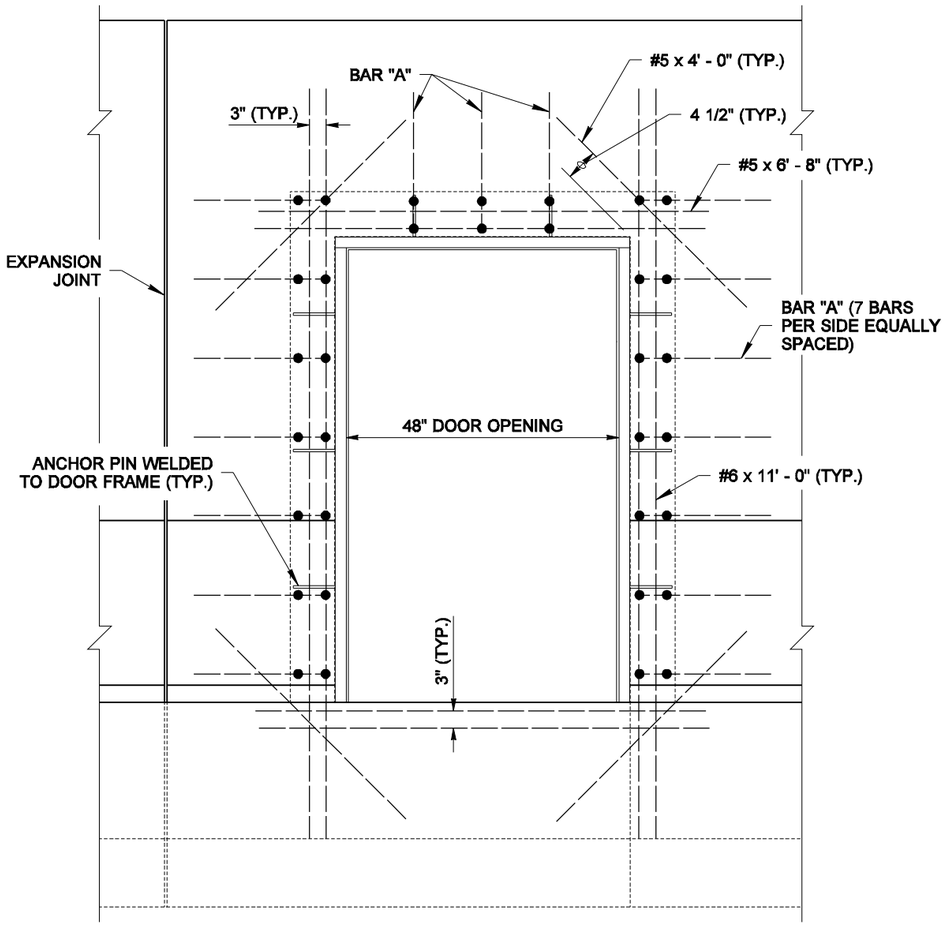

DOOR DETAIL
(SEE NOTE 2)

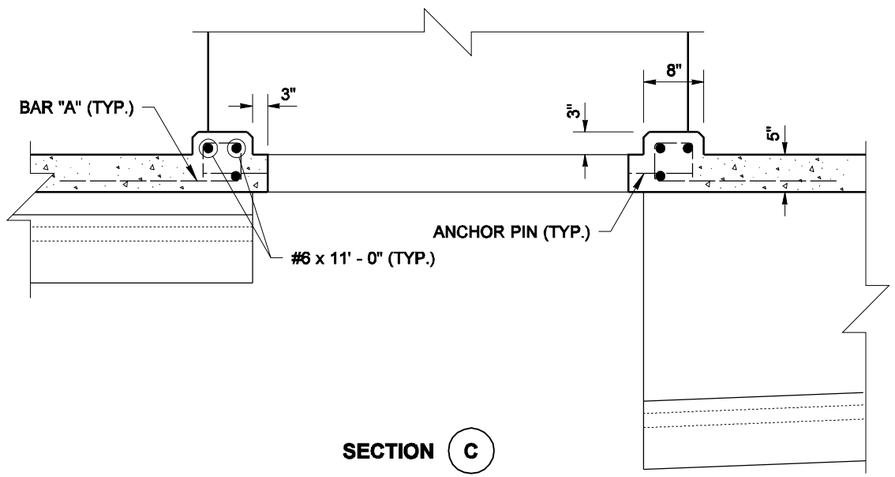

SECTION C

BENDING DIAGRAM

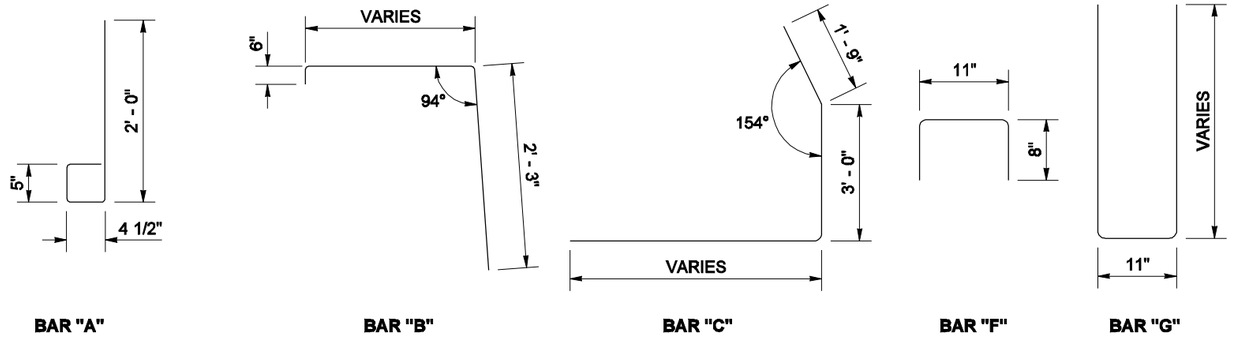

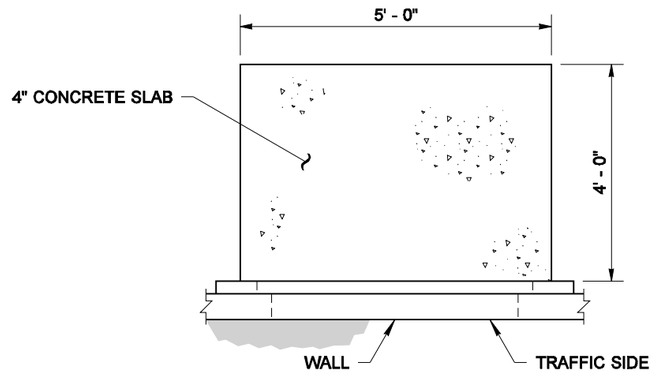

CONCRETE SLAB DETAIL

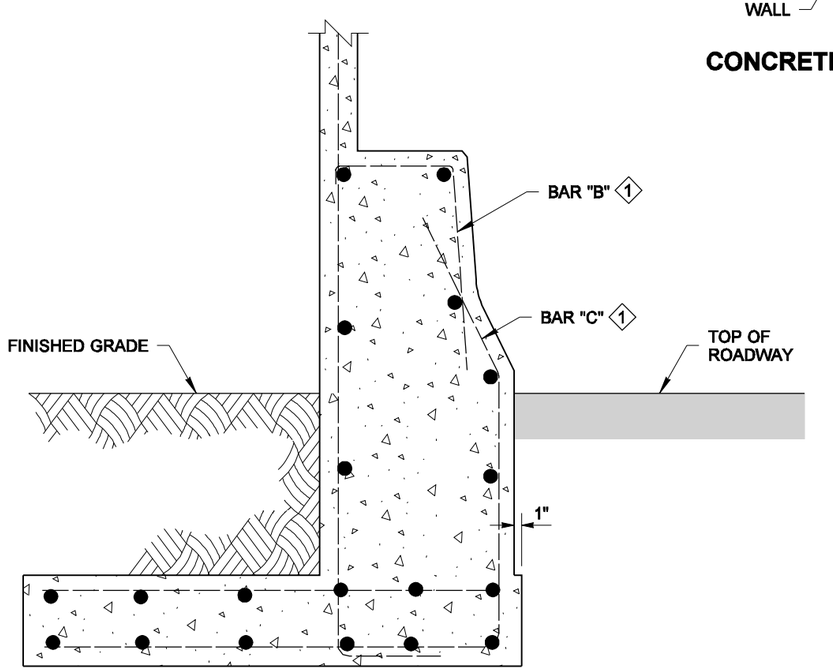

SECTION D

FOR CAST-IN-PLACE WALL W/ TRAFFIC BARRIER

BIJAN KHALEGHI
STATE OF WASHINGTON
27695
REGISTERED
PROFESSIONAL ENGINEER

EXPIRES AUGUST 23, 2006

NOTE: THIS PLAN IS NOT A LEGAL ENGINEERING DOCUMENT BUT AN ELECTRONIC DUPLICATE. THE ORIGINAL, SIGNED BY THE ENGINEER AND APPROVED FOR PUBLICATION, IS KEPT ON FILE AT THE WASHINGTON STATE DEPARTMENT OF TRANSPORTATION. A COPY MAY BE OBTAINED UPON REQUEST.

NOISE BARRIER WALL ACCESS DOOR TYPE 2

STANDARD PLAN D-2.82-00

SHEET 2 OF 2 SHEETS

APPROVED FOR PUBLICATION

Harold J. Peterfeso — STATE DESIGN ENGINEER

11-10-05 — DATE

Washington State Department of Transportation

EFFECTIVE: APRIL 2, 2007 TO JANUARY 6, 2008

EFFECTIVE: APRIL 2, 2007 TO JANUARY 6, 2008

DRAWN BY: ADAM COCHRAN

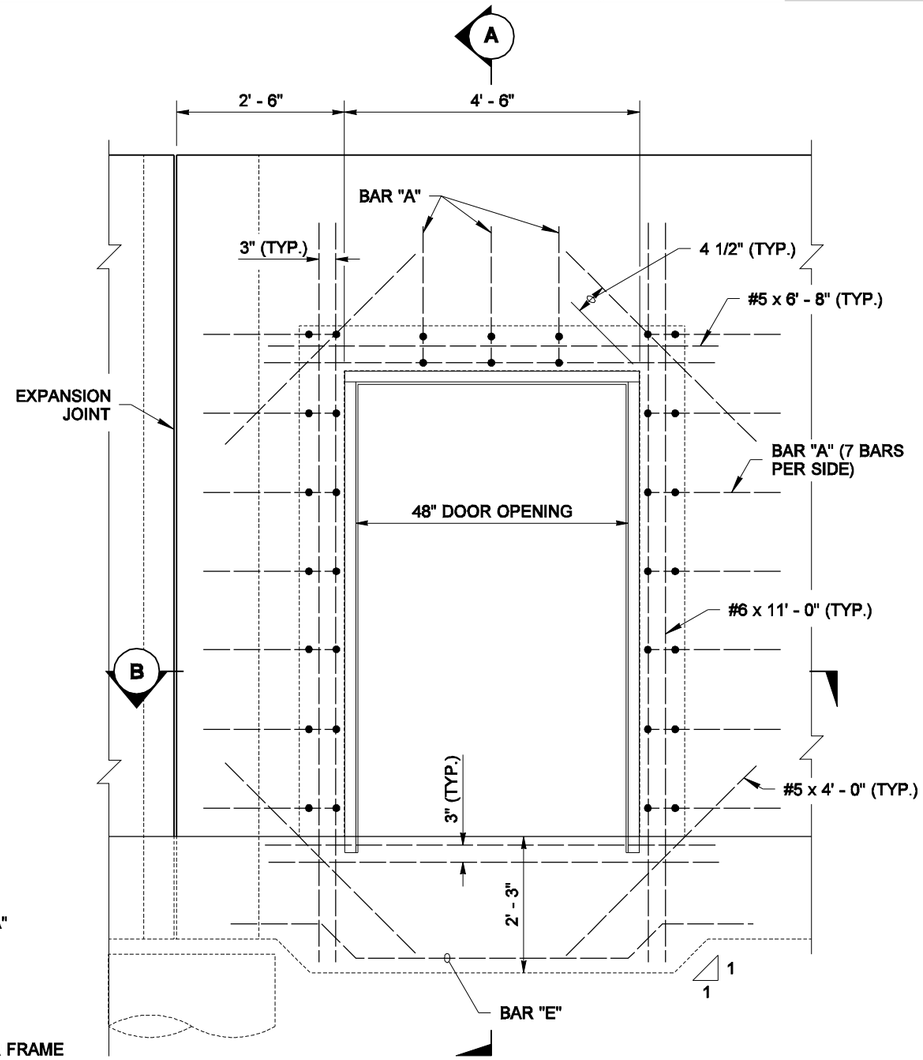

CONCRETE SLAB NOT SHOWN

DOOR DETAIL
(SEE NOTE 2)

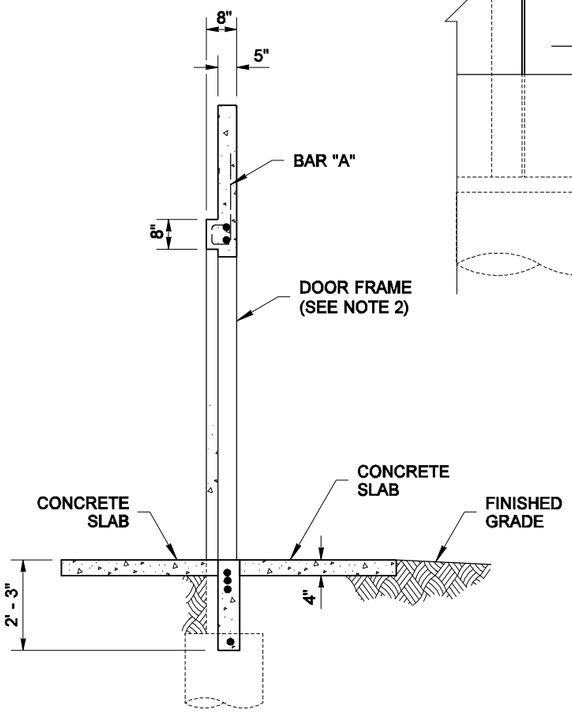

SECTION (A)

BENDING DIAGRAM

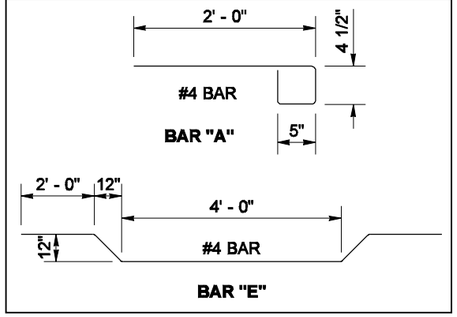

NOTES

1. All rebar shall have a minimum 1 1/2" cover.
2. See Standard Plan D-2.92 for door and frame details.
3. See Standard Plan D-2.36 for wall reinforcement not shown.

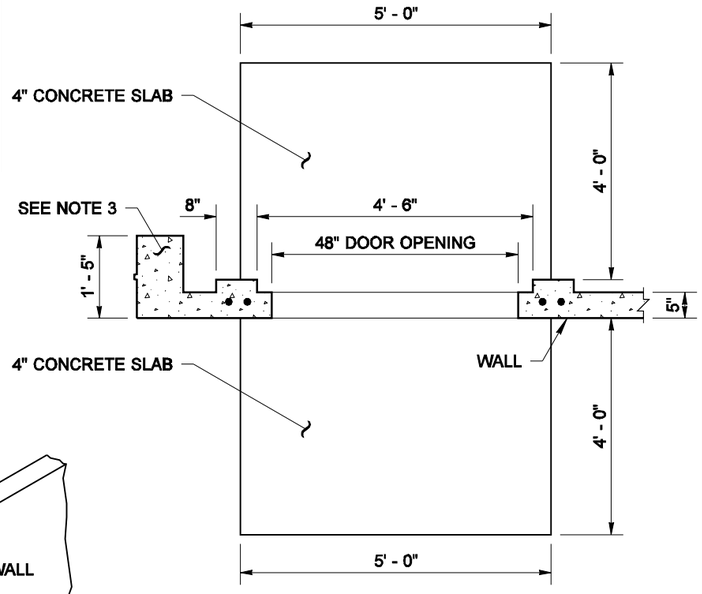

SECTION (B)

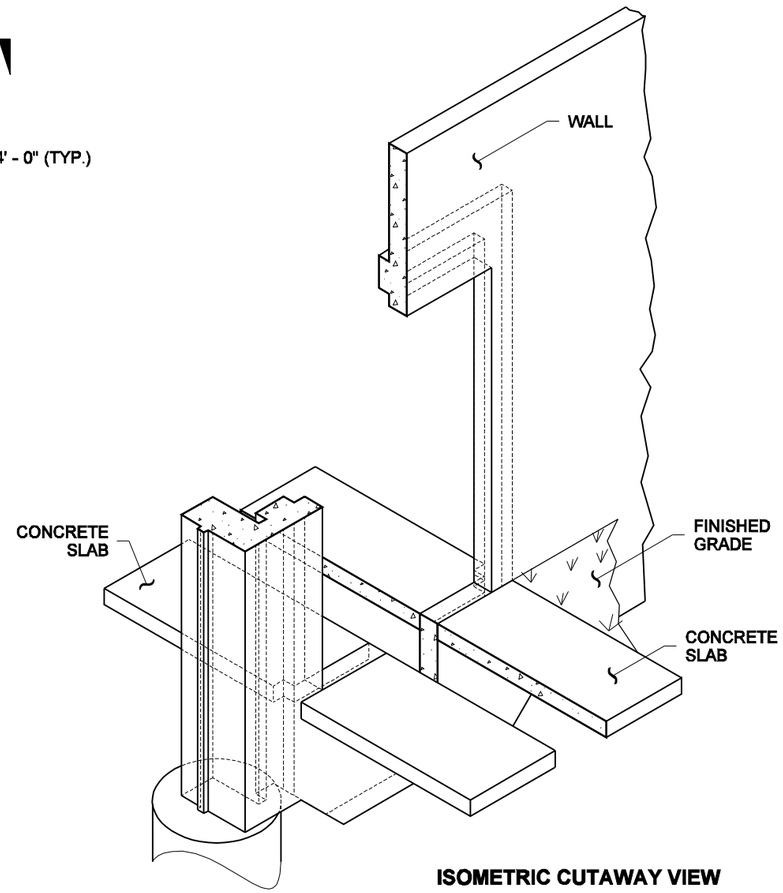

ISOMETRIC CUTAWAY VIEW

FOR PRECAST WALL ON SHAFT FOUNDATION

BIJAN KHALEGHI
STATE OF WASHINGTON
27695
REGISTERED
PROFESSIONAL ENGINEER

EXPIRES AUGUST 23, 2006

NOTE: THIS PLAN IS NOT A LEGAL ENGINEERING DOCUMENT BUT AN ELECTRONIC DUPLICATE. THE ORIGINAL, SIGNED BY THE ENGINEER AND APPROVED FOR PUBLICATION, IS KEPT ON FILE AT THE WASHINGTON STATE DEPARTMENT OF TRANSPORTATION. A COPY MAY BE OBTAINED UPON REQUEST.

NOISE BARRIER WALL ACCESS DOOR TYPE 3

STANDARD PLAN D-2.84-00

SHEET 1 OF 1 SHEET

APPROVED FOR PUBLICATION

Harold J. Peterfeso — STATE DESIGN ENGINEER — *11-10-05* — DATE

Washington State Department of Transportation

EFFECTIVE: APRIL 2, 2007 TO JANUARY 6, 2008

EFFECTIVE: APRIL 2, 2007 TO JANUARY 6, 2008

DRAWN BY: ADAM COCHRAN

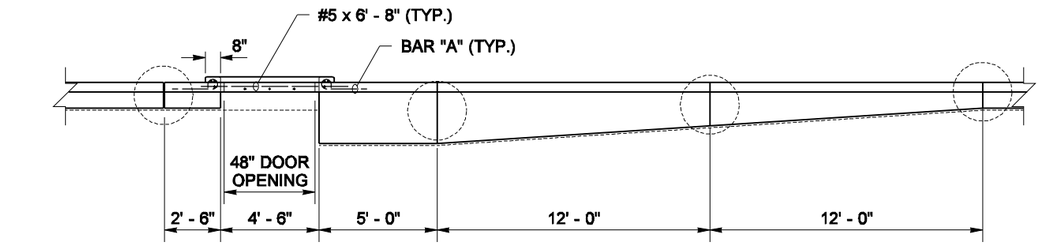

TOP VIEW

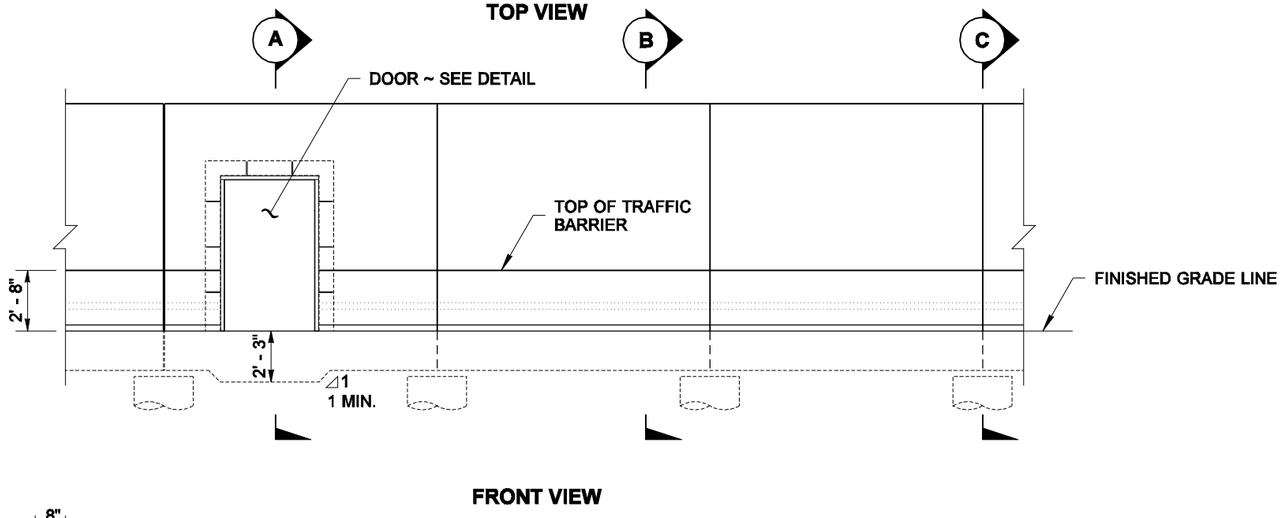

FRONT VIEW

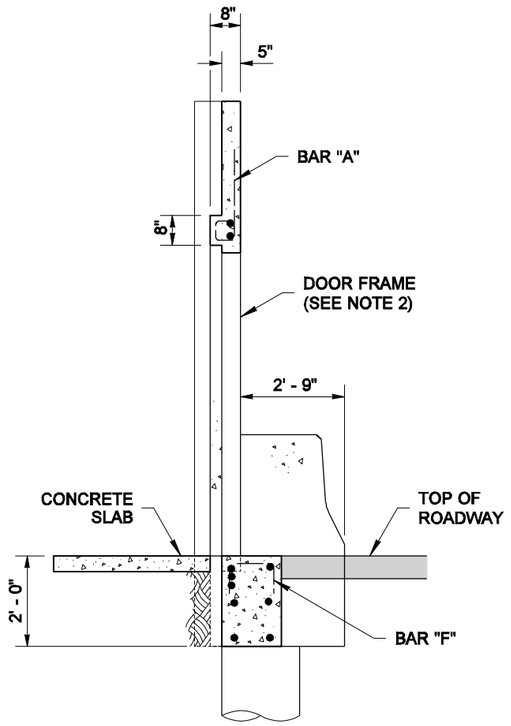

SECTION A

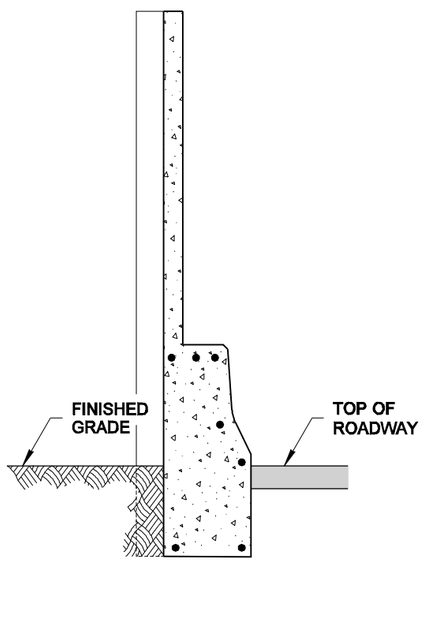

SECTION B

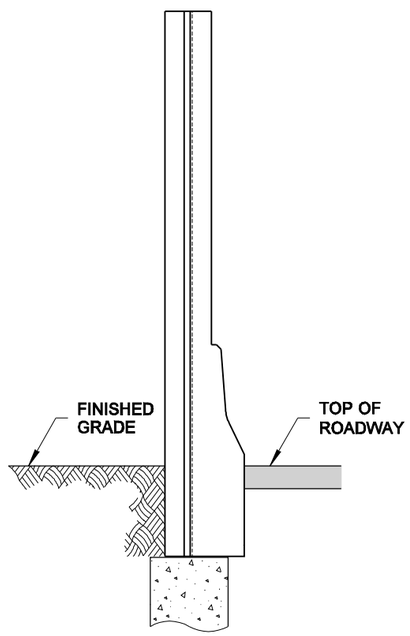

SECTION C

NOTES

1. All rebar shall have a minimum 1 1/2" cover.
2. See Standard Plan D-2.92 for door and frame details.
3. See Standard Plan D-2.44 for wall reinforcement not shown.

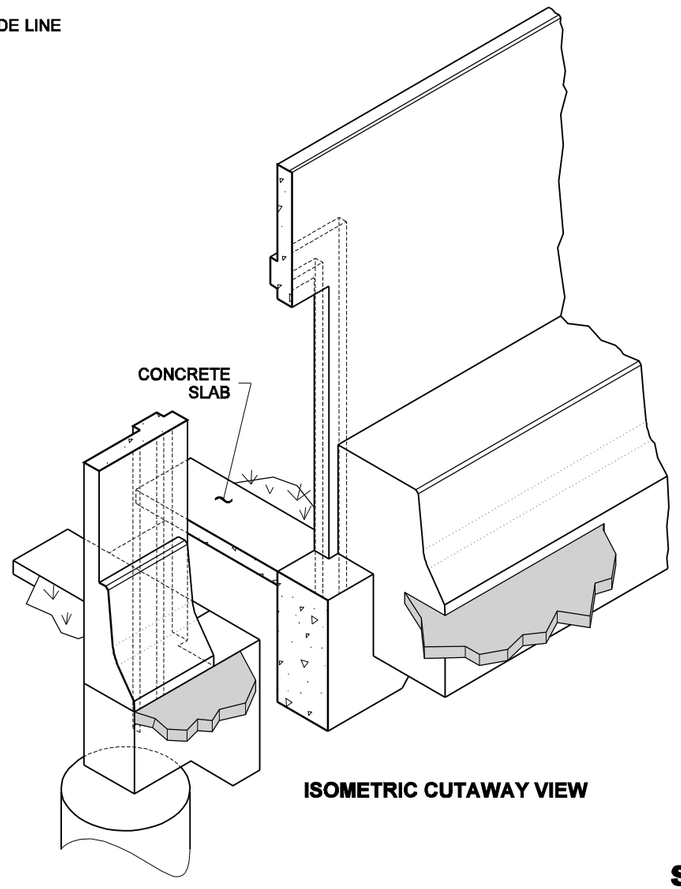

ISOMETRIC CUTAWAY VIEW

FOR PRECAST WALL W/ TRAFFIC BARRIER ON SHAFT FOUNDATION

BIJAN KHALEGHI
STATE OF WASHINGTON
27695
REGISTERED
PROFESSIONAL ENGINEER

EXPIRES AUGUST 23, 2006

NOTE: THIS PLAN IS NOT A LEGAL ENGINEERING DOCUMENT BUT AN ELECTRONIC DUPLICATE. THE ORIGINAL, SIGNED BY THE ENGINEER AND APPROVED FOR PUBLICATION, IS KEPT ON FILE AT THE WASHINGTON STATE DEPARTMENT OF TRANSPORTATION. A COPY MAY BE OBTAINED UPON REQUEST.

NOISE BARRIER WALL ACCESS DOOR TYPE 4

STANDARD PLAN D-2.86-00

SHEET 1 OF 2 SHEETS

APPROVED FOR PUBLICATION

Harold J. Peterfeso — STATE DESIGN ENGINEER

11-10-05 — DATE

Washington State Department of Transportation

EFFECTIVE: APRIL 2, 2007 TO JANUARY 6, 2008

EFFECTIVE: APRIL 2, 2007 TO JANUARY 6, 2008

DRAWN BY: ADAM COCHRAN

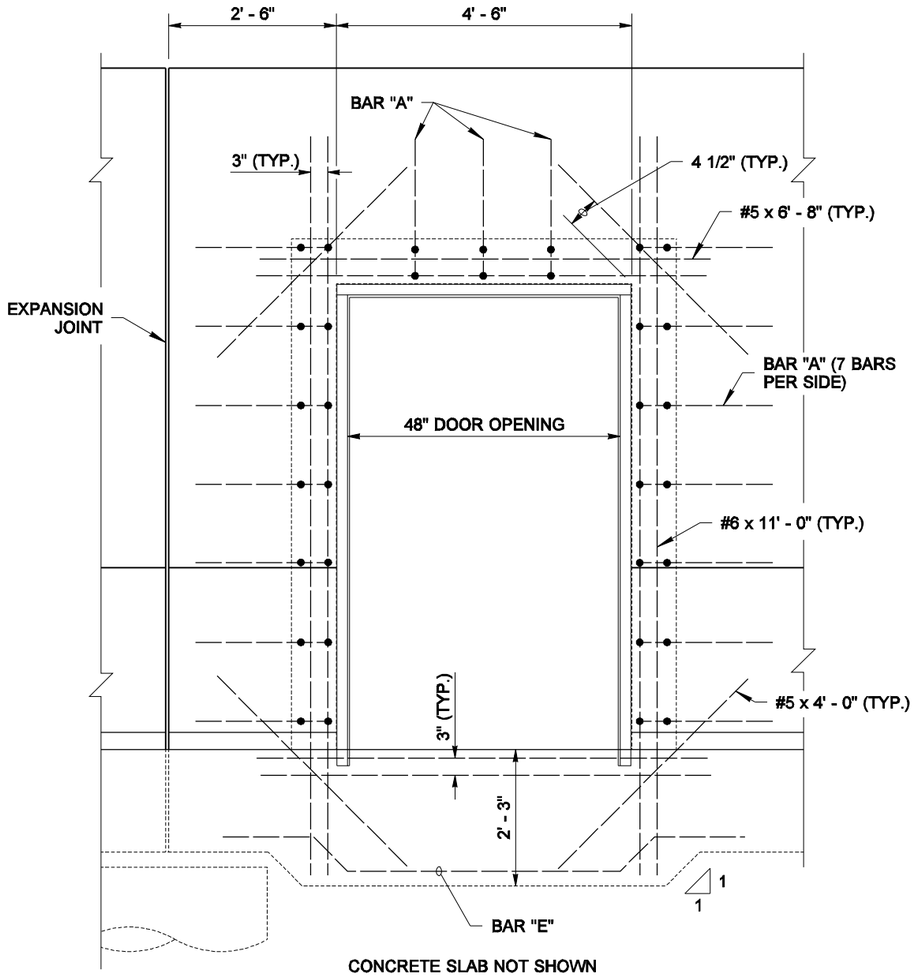

CONCRETE SLAB NOT SHOWN

DOOR DETAIL

(SEE NOTE 2)

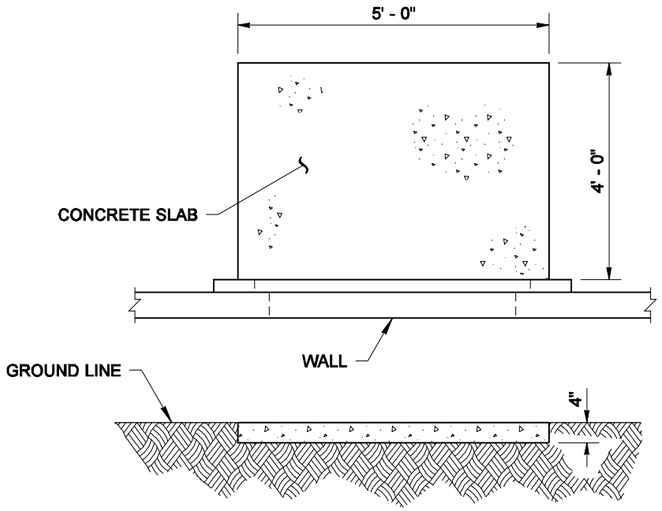

CONCRETE SLAB DETAIL

BENDING DIAGRAM

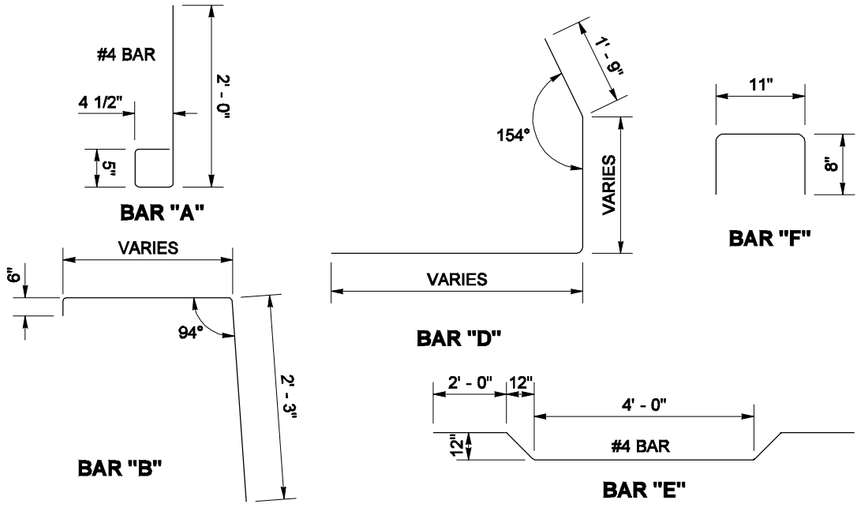

FOR PRECAST WALL W/ TRAFFIC BARRIER ON SHAFT FOUNDATION

BIJAN KHALEGHI
STATE OF WASHINGTON
27695
REGISTERED
PROFESSIONAL ENGINEER

EXPIRES AUGUST 23, 2006

NOTE: THIS PLAN IS NOT A LEGAL ENGINEERING DOCUMENT BUT AN ELECTRONIC DUPLICATE. THE ORIGINAL, SIGNED BY THE ENGINEER, AND APPROVED FOR PUBLICATION, IS KEPT ON FILE AT THE WASHINGTON STATE DEPARTMENT OF TRANSPORTATION. A COPY MAY BE OBTAINED UPON REQUEST.

NOISE BARRIER WALL ACCESS DOOR TYPE 4

STANDARD PLAN D-2.86-00

SHEET 2 OF 2 SHEETS

APPROVED FOR PUBLICATION

Harold J. Peterfeso — STATE DESIGN ENGINEER

11-10-05 — DATE

Washington State Department of Transportation

EFFECTIVE: APRIL 2, 2007 TO JANUARY 6, 2008

EFFECTIVE: APRIL 2, 2007 TO JANUARY 6, 2008

DRAWN BY: ADAM COCHRAN

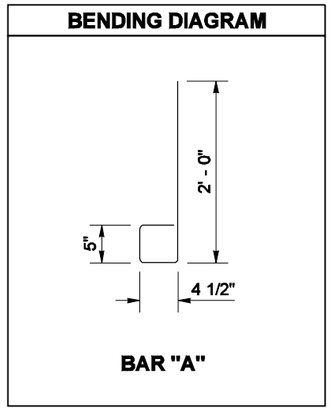

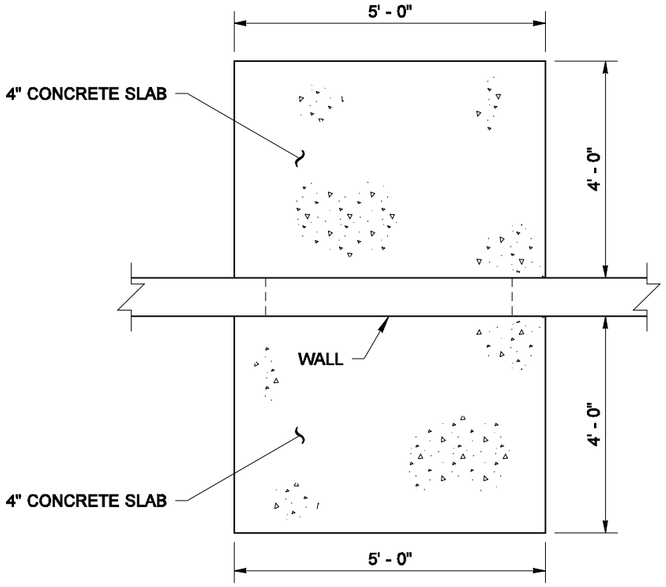

CONCRETE SLAB DETAIL

NOTES

1. All rebar shall have a minimum 1 1/2" cover.
2. See Standard Plan D-2.92 for door and frame details.
3. See Standard Plan D-2.68 for wall reinforcement not shown.

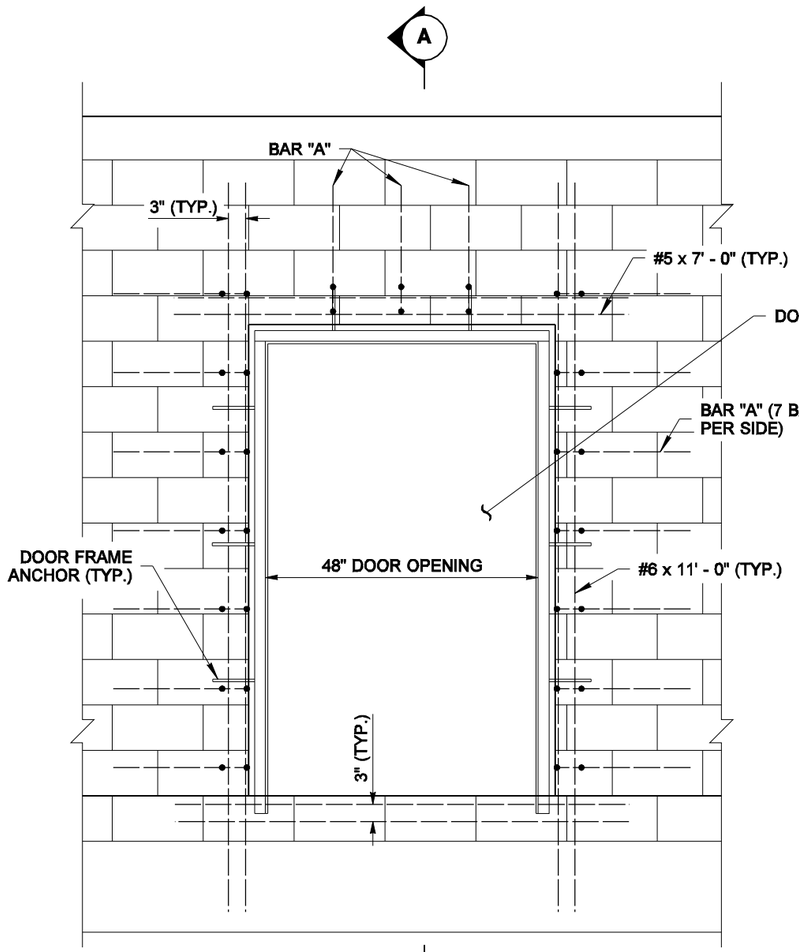

FRONT VIEW

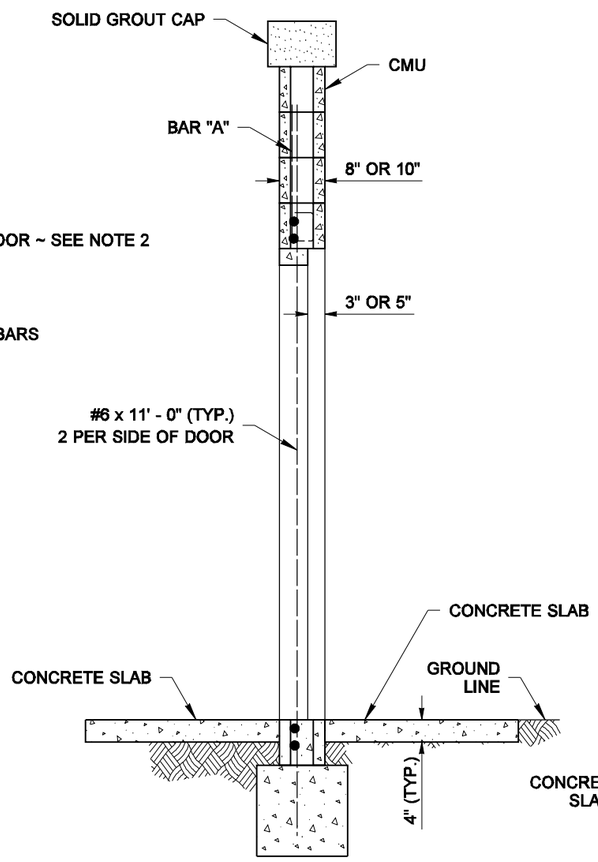

SECTION (A)

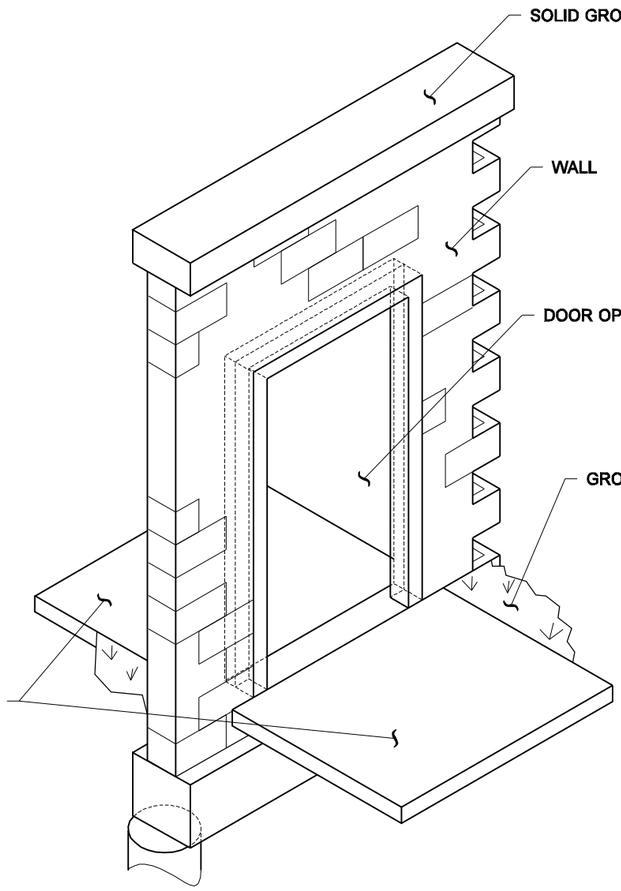

FOR MASONRY WALL (SHAFT FOUNDATION SHOWN)

BIJAN KHALEGHI
STATE OF WASHINGTON
27695
REGISTERED
PROFESSIONAL ENGINEER

EXPIRES AUGUST 23, 2006

NOTE: THIS PLAN IS NOT A LEGAL ENGINEERING DOCUMENT BUT AN ELECTRONIC DUPLICATE. THE ORIGINAL, SIGNED BY THE ENGINEER AND APPROVED FOR PUBLICATION, IS KEPT ON FILE AT THE WASHINGTON STATE DEPARTMENT OF TRANSPORTATION. A COPY MAY BE OBTAINED UPON REQUEST.

NOISE BARRIER WALL ACCESS DOOR TYPE 5

STANDARD PLAN D-2.88-00

SHEET 1 OF 1 SHEET

APPROVED FOR PUBLICATION

Harold J. Peterfeso — STATE DESIGN ENGINEER

11-10-05 — DATE

Washington State Department of Transportation

EFFECTIVE: APRIL 2, 2007 TO JANUARY 6, 2008

EFFECTIVE: APRIL 2, 2007 TO JANUARY 6, 2008

DRAWN BY: ADAM COCHRAN

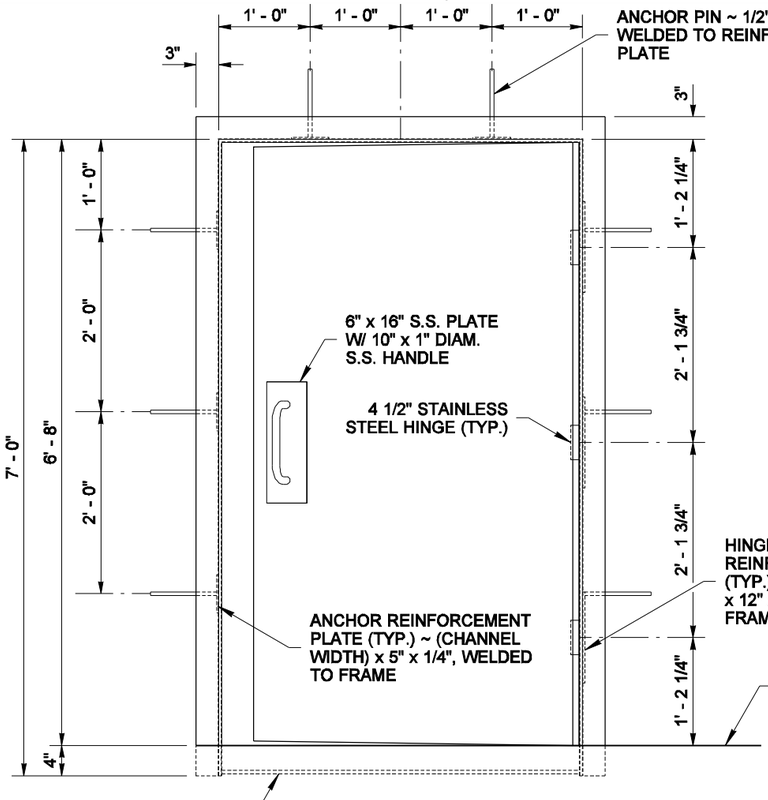

FRONT VIEW

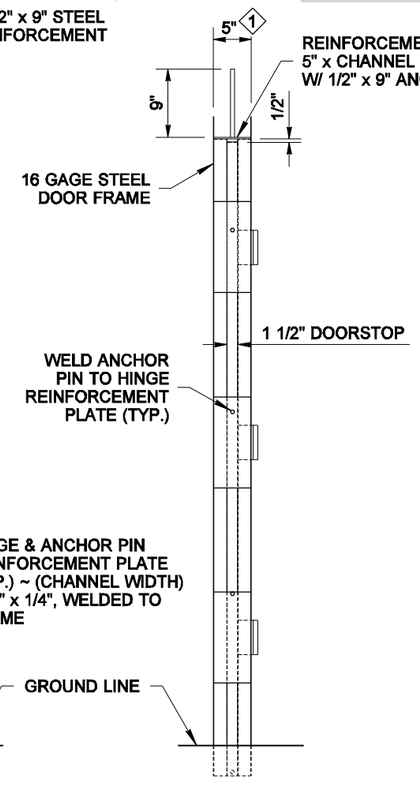

SIDE VIEW

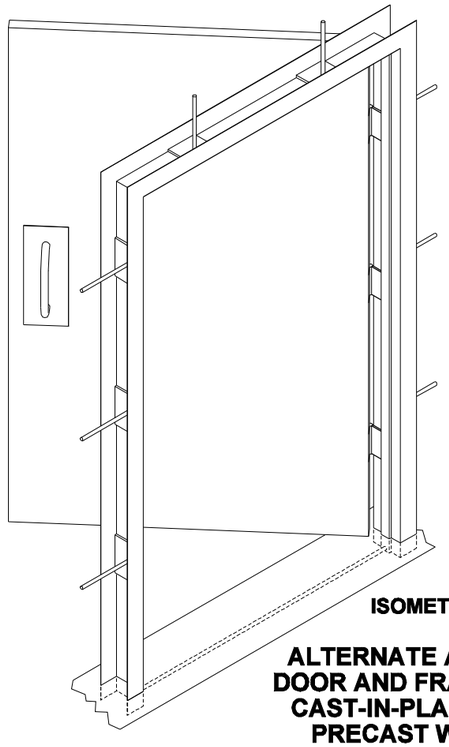

ISOMETRIC VIEW

ALTERNATE ACCESS DOOR AND FRAME FOR CAST-IN-PLACE AND PRECAST WALLS

EFFECTIVE: APRIL 2, 2007 TO JANUARY 6, 2008

EFFECTIVE: APRIL 2, 2007 TO JANUARY 6, 2008

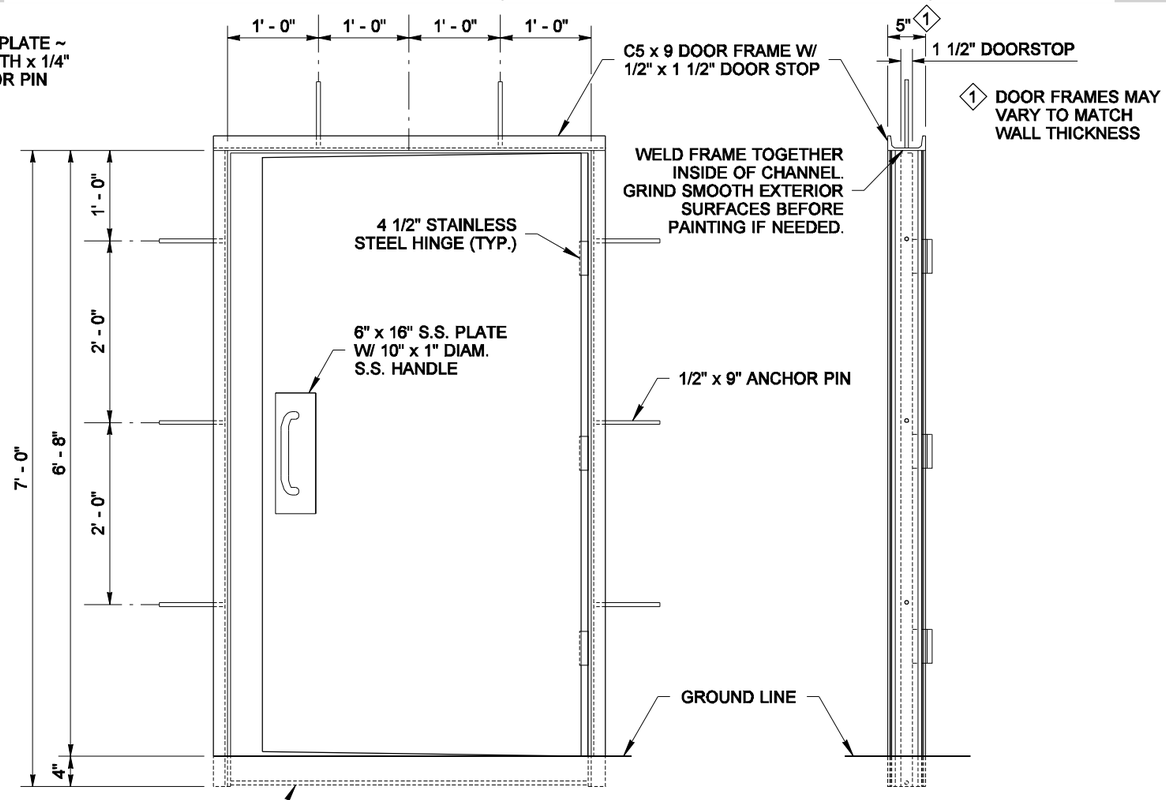

FRONT VIEW

SIDE VIEW

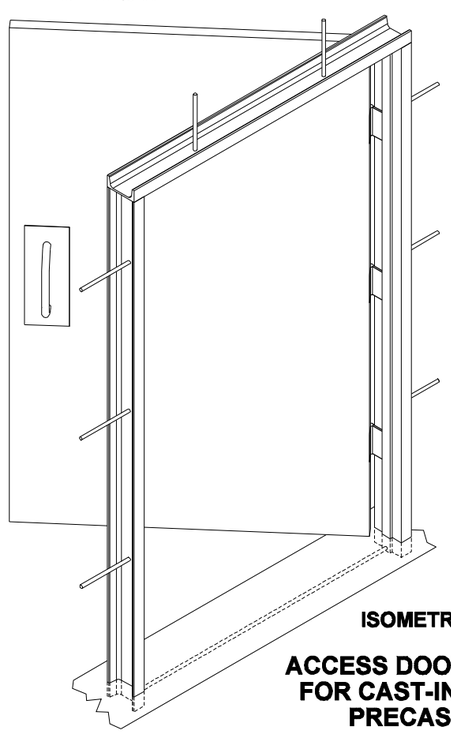

ISOMETRIC VIEW

ACCESS DOOR AND FRAME FOR CAST-IN-PLACE AND PRECAST WALLS

NOTE

All exposed metal surfaces shall be painted with paint conforming to the requirements in the Standard Specifications, Section 9.

BIJAN KHALEGHI
STATE OF WASHINGTON
27695
REGISTERED
PROFESSIONAL ENGINEER

EXPIRES AUGUST 23, 2006

NOTE: THIS PLAN IS NOT A LEGAL ENGINEERING DOCUMENT BUT AN ELECTRONIC DUPLICATE. THE ORIGINAL, SIGNED BY THE ENGINEER AND APPROVED FOR PUBLICATION, IS KEPT ON FILE AT THE WASHINGTON STATE DEPARTMENT OF TRANSPORTATION. A COPY MAY BE OBTAINED UPON REQUEST.

NOISE BARRIER WALL ACCESS DOOR & FRAME

STANDARD PLAN D-2.92-00

SHEET 1 OF 2 SHEETS

APPROVED FOR PUBLICATION

Harold J. Peterfeso — STATE DESIGN ENGINEER

11-10-05 — DATE

Washington State Department of Transportation

EFFECTIVE: APRIL 2, 2007 TO JANUARY 6, 2008

EFFECTIVE: APRIL 2, 2007 TO JANUARY 6, 2008

DRAWN BY: ADAM COCHRAN

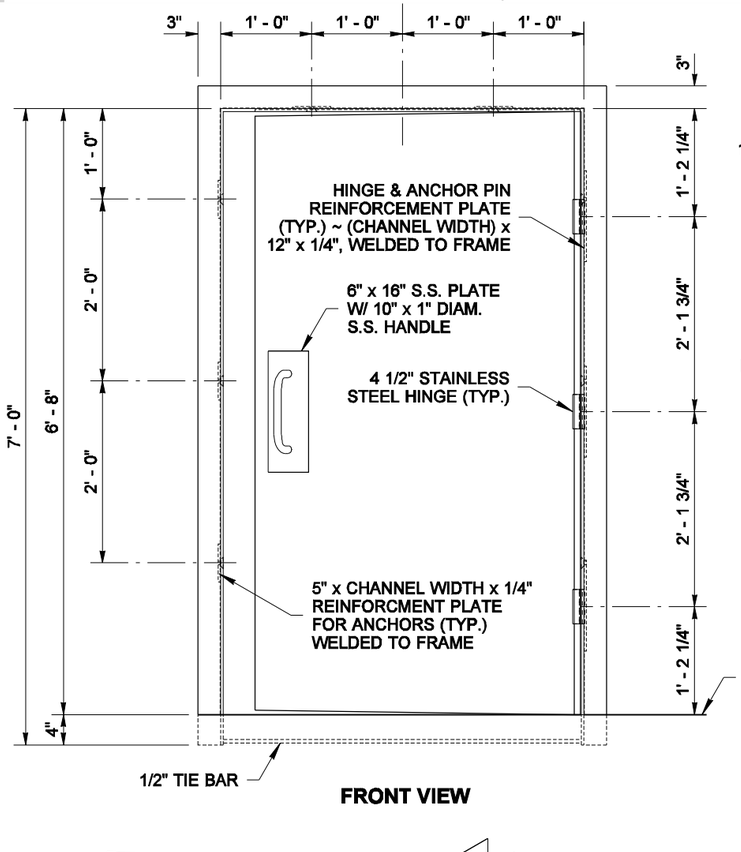

FRONT VIEW

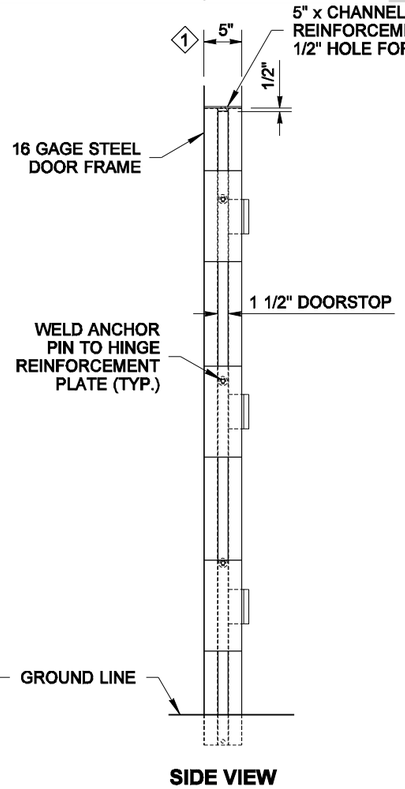

SIDE VIEW

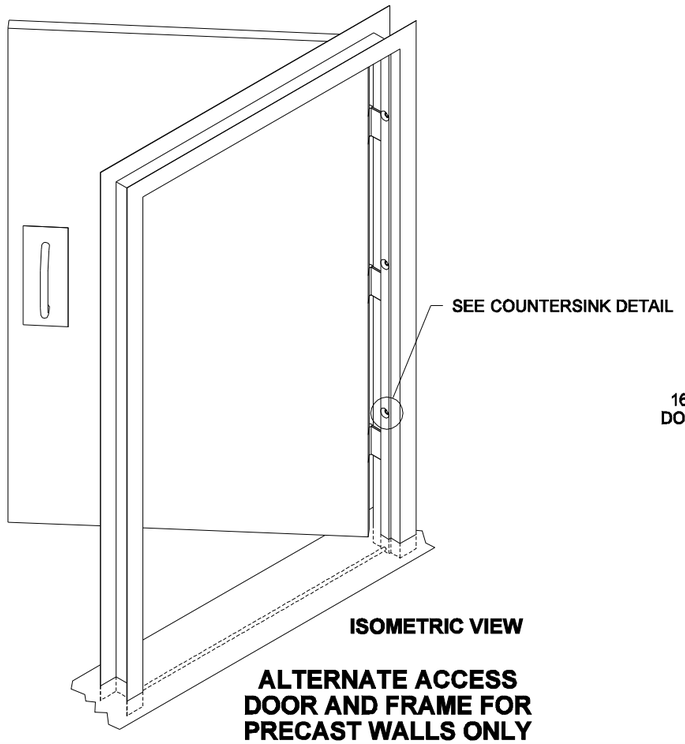

ISOMETRIC VIEW

ALTERNATE ACCESS DOOR AND FRAME FOR PRECAST WALLS ONLY

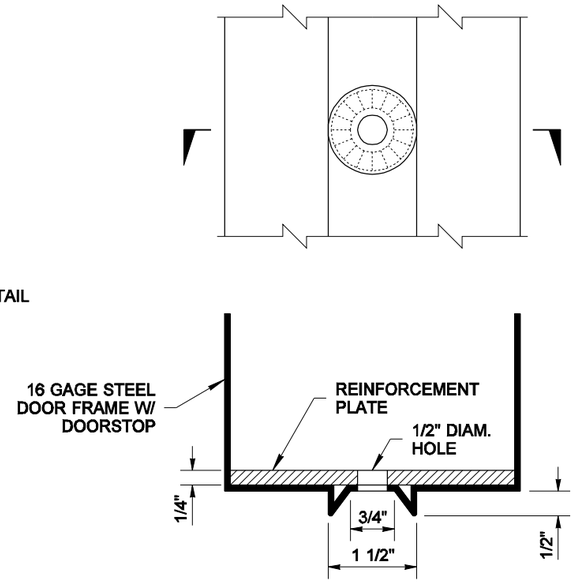

COUNTERSINK DETAIL

EFFECTIVE: APRIL 2, 2007 TO JANUARY 6, 2008

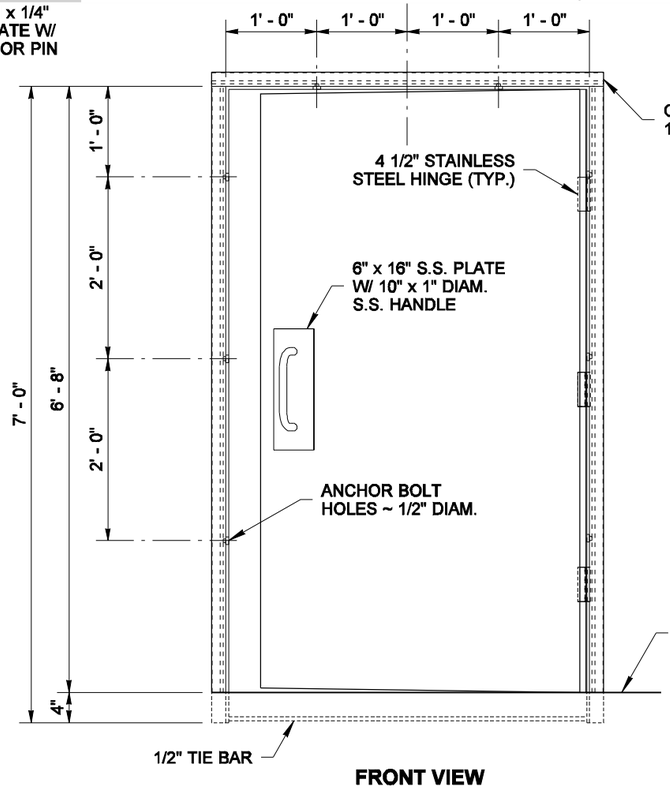

FRONT VIEW

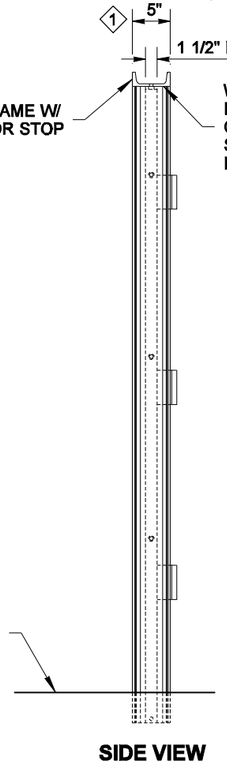

SIDE VIEW

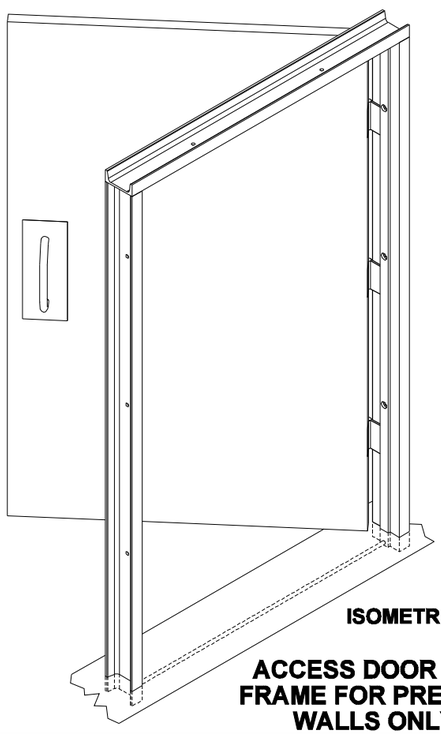

ISOMETRIC VIEW

ACCESS DOOR AND FRAME FOR PRECAST WALLS ONLY

BIJAN KHALEGHI
STATE OF WASHINGTON
27695
REGISTERED
PROFESSIONAL ENGINEER

EXPIRES AUGUST 23, 2006

NOTE: THIS PLAN IS NOT A LEGAL ENGINEERING DOCUMENT BUT AN ELECTRONIC DUPLICATE. THE ORIGINAL, SIGNED BY THE ENGINEER AND APPROVED FOR PUBLICATION, IS KEPT ON FILE AT THE WASHINGTON STATE DEPARTMENT OF TRANSPORTATION. A COPY MAY BE OBTAINED UPON REQUEST.

NOISE BARRIER WALL ACCESS DOOR & FRAME

STANDARD PLAN D-2.92-00

SHEET 2 OF 2 SHEETS

APPROVED FOR PUBLICATION

Harold J. Peterfeso — STATE DESIGN ENGINEER

11-10-05 — DATE

Washington State Department of Transportation

EFFECTIVE: APRIL 2, 2007 TO JANUARY 6, 2008

EFFECTIVE: APRIL 2, 2007 TO JANUARY 6, 2008

EFFECTIVE: APRIL 2, 2007 TO JANUARY 6, 2008

DRAWN BY: MARK SUJKA

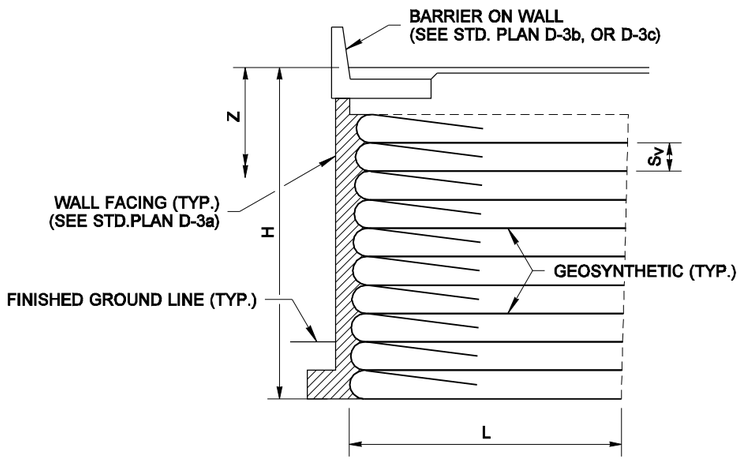

GEOSYNTHETIC WALL, TYPE 1
INCLUDES SEISMIC DESIGN
GROUND ACCELERATION COEFFICIENT, A=0.16g TO 0.30g.
HORIZONTAL BACKSLOPE WITH 2 FT. TRAFFIC SURCHARGE

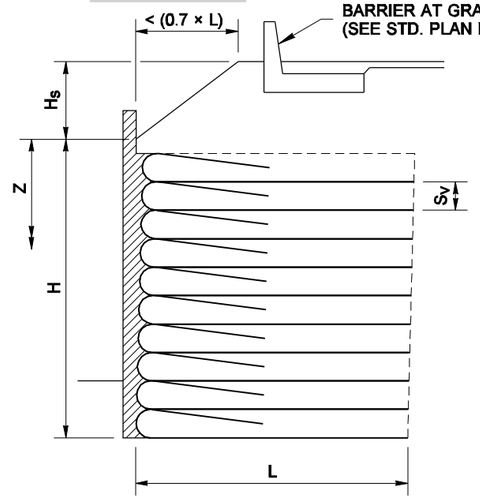

GEOSYNTHETIC WALL, TYPE 4
STATIC DESIGN ONLY
GROUND ACCELERATION COEFFICIENT, A=0.15g OR LESS.
HORIZONTAL BACKSLOPE WITH 2 FT. TRAFFIC SURCHARGE

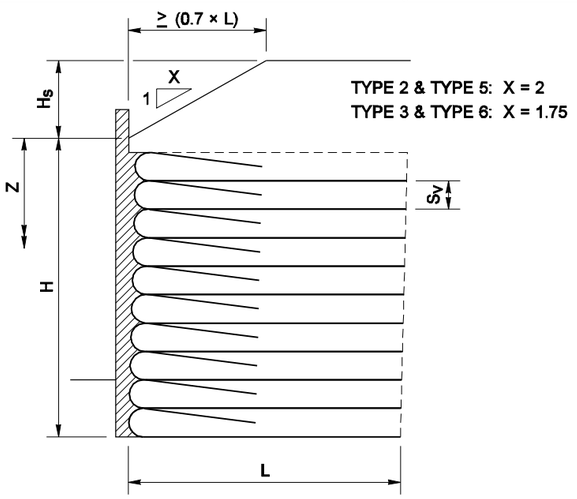

GEOSYNTHETIC WALL, TYPES 2 & 3
INCLUDES SEISMIC DESIGN
GROUND ACCELERATION COEFFICIENT, A=0.16g TO 0.30g.

PERMANENT GEOSYNTHETIC WALLS
TYPICAL CROSS SECTIONS

GEOSYNTHETIC WALL, TYPES 5 & 6
STATIC DESIGN ONLY
GROUND ACCELERATION COEFFICIENT, A=0.15g OR LESS.

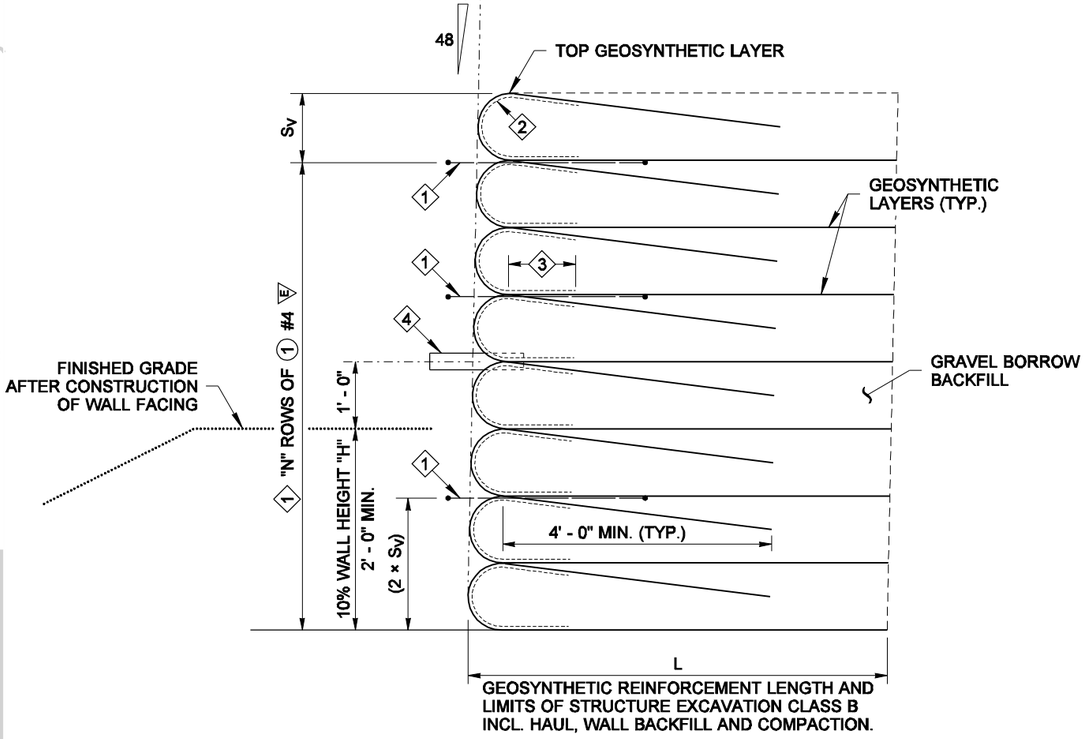

SECTION DETAIL

NOTES

FOR THE VALUES OF "L", "N", AND "S_V", SEE SHEET 2.

FOR GEOSYNTHETIC WALL CONSTRUCTION SEQUENCE, SEE SHEET 3.

E = EPOXY COATED

KEY NOTES

① "N" ROWS OF ① #4 E DOWEL REINFORCEMENT PLACED BETWEEN GEOSYNTHETIC LAYERS @ 5' - 0" O.C. HORIZONTAL SPACING, SEE TABLE, SHEET 2. VERTICAL SPACING BETWEEN ROWS TO BE EQUAL, AS MULTIPLES OF "Sv" ALLOW. ROWS MAY BE STAGGERED.

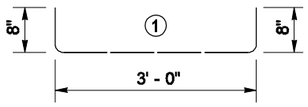

② GEOTEXTILE FOR UNDERGROUND DRAINAGE CLASS A, LOW SURVIVABILITY (ONLY NEEDED IF A GEOGRID IS USED FOR GEOSYNTHETIC REINFORCEMENT)

③ 1' - 0" MIN. GEOTEXTILE OVERLAP, TOP & BOTTOM

④ 3" I.D. PVC PIPE FOR WEEP HOLE IN WALL FACING ~ PLACE BETWEEN GEOSYNTHETIC LAYERS APPROX. 9" DEEP AT 10' - 0" HORIZONTAL SPACING, LENGTH TO EXTEND TO OUTER SURFACE OF SPECIFIED WALL FACING.

TONY M. ALLEN
STATE OF WASHINGTON
25339
REGISTERED
PROFESSIONAL ENGINEER

EXPIRES JULY 1, 2007

NOTE: THIS PLAN IS NOT A LEGAL ENGINEERING DOCUMENT BUT AN ELECTRONIC DUPLICATE. THE ORIGINAL, SIGNED BY THE ENGINEER AND APPROVED FOR PUBLICATION, IS KEPT ON FILE AT THE WASHINGTON STATE DEPARTMENT OF TRANSPORTATION. A COPY MAY BE OBTAINED UPON REQUEST.

PERMANENT GEOSYNTHETIC WALL TYPES 1 ~ 6
STANDARD PLAN D-3

SHEET 1 OF 3 SHEETS

APPROVED FOR PUBLICATION

Harold J. Peterfeso — STATE DESIGN ENGINEER — *07-13-05* — DATE

Washington State Department of Transportation

EFFECTIVE: APRIL 2, 2007 TO JANUARY 6, 2008

EFFECTIVE: APRIL 2, 2007 TO JANUARY 6, 2008

EFFECTIVE: APRIL 2, 2007 TO JANUARY 6, 2008

DRAWN BY: MARK SUJKA

GEOSYNTHETIC REINFORCEMENT LENGTH AND DOWELS

TOTAL WALL HEIGHT $H+H_S$ (ft)	FASCIA FOOTING WIDTH B (ft - in)	GEOSYNTHETIC REINFORCEMENT LENGTH L (ft)						ROWS OF #4 (E) DOWEL BARS REQUIRED N (No.)
		TYPE 1	TYPE 2	TYPE 3	TYPE 4	TYPE 5	TYPE 6	
≤ 5'	1' - 0"	6.0	6.0	6.5	6.0	6.0	6.0	2
6'	1' - 0"	6.0	6.0	7.9	6.0	6.0	6.0	3
7'	1' - 0"	6.4	6.9	9.3	6.4	6.4	6.4	3
8'	1' - 0"	6.9	7.9	10.7	6.9	6.9	7.1	3
9'	1' - 0"	7.4	8.9	12.1	7.4	7.4	8.1	3
10'	1' - 0"	7.9	10.0	13.5	7.9	7.9	9.0	4
11'	1' - 0 1/2"	8.4	11.0	14.7	8.4	8.4	10.0	4
12'	1' - 0 1/2"	8.8	12.0	16.1	8.8	8.8	10.9	4
13'	1' - 1"	9.3	13.0	17.5	9.3	9.3	11.9	4
14'	1' - 1"	9.8	13.9	18.9	9.8	9.8	12.8	4
15'	1' - 2"	10.5	14.9	20.3	10.5	10.5	13.7	6
16'	1' - 2"	11.2	16.0	21.7	11.2	11.2	14.7	6
17'	1' - 2 1/2"	11.9	17.0	22.9	11.9	11.9	15.6	8
18'	1' - 2 1/2"	12.6	18.0	24.3	12.6	12.6	16.6	8
19'	1' - 3"	13.3	19.0	25.7	13.3	13.4	17.5	8
20'	1' - 3"	14.0	20.1	27.1	14.0	14.1	18.5	10
21'	1' - 3 1/2"	14.7	21.1	28.5	14.7	14.8	19.4	10
22'	1' - 3 1/2"	15.4	22.2	29.9	15.4	15.5	20.4	10
23'	1' - 4"	16.1	23.2	31.1	16.1	16.2	21.3	10
24'	1' - 4"	16.8	24.2	32.5	16.8	16.9	22.3	10
25'	1' - 5"	17.5	25.2	33.9	17.5	17.7	23.2	10
26'	1' - 5"	18.2	26.3	35.3	18.2	18.4	24.2	10
27'	1' - 5 1/2"	18.9	27.3	36.7	18.9	19.1	25.1	10
28'	1' - 5 1/2"	19.6	28.2	38.1	19.6	19.9	26.1	10
29'	1' - 6"	20.3	29.2	39.5	20.3	20.6	27.0	10
30'	1' - 6"	21.0	30.3	40.7	21.0	21.3	28.0	10
31'	1' - 6 1/2"	21.7	31.4	42.1	21.7	22.0	28.9	10
32'	1' - 6 1/2"	22.4	32.3	43.5	22.4	22.8	29.9	10
33'	1' - 7"	23.1	33.3	44.9	23.1	23.4	30.8	10
34'	1' - 7"	23.8	34.3	46.3	23.8	24.2	31.8	10
35'	1' - 8"	24.5	35.4	47.7	24.5	24.9	32.7	10

NOTE: THIS PLAN IS NOT A LEGAL ENGINEERING DOCUMENT BUT AN ELECTRONIC DUPLICATE. THE ORIGINAL, SIGNED BY THE ENGINEER AND APPROVED FOR PUBLICATION, IS KEPT ON FILE AT THE WASHINGTON STATE DEPARTMENT OF TRANSPORTATION. A COPY MAY BE OBTAINED UPON REQUEST.

GEOSYNTHETIC REINFORCEMENT SPACING AND STRENGTH

TOTAL WALL HEIGHT $H+H_S$ (ft)	DEPTH BELOW TOP OF SURCHARGE $Z+H_S$ (ft)	GEOSYNTHETIC REINFORCEMENT VERTICAL SPACING S_V (ft)	LONG-TERM GEOSYNTHETIC REINFORCEMENT STRENGTH REQUIRED T_{al} (lb/ft)					
			TYPE 1	TYPE 2	TYPE 3	TYPE 4	TYPE 5	TYPE 6
UP TO 5	5	0.75	244	220	228	244	220	228
	5	1.00	325	294	305	325	294	305
	5	1.25	406	367	380	406	367	380
$5 < H+H_S \leq 10$	0 to 10	0.75	418	415	438	418	415	438
	0 to 10	1.00	557	553	584	557	553	584
	0 to 10	1.25	696	691	731	696	691	731
$10 < H+H_S \leq 20$	0 to 10	0.75	418	498	580	418	467	534
	10.1 to 20	0.75	766	815	882	766	815	882
	0 to 10	1.00	557	665	774	557	623	712
	10.1 to 20	1.00	1020	1087	1176	1020	1087	1176
	0 to 10	1.25	696	830	967	696	779	889
	10.1 to 20	1.25	1272	1356	1464	1272	1356	1464
$20 < H+H_S \leq 30$	0 to 10	0.75	442	620	744	418	528	629
	10.1 to 20	0.75	766	876	1000	766	876	977
	20.1 to 30	0.75	1114	1224	1320	1114	1224	1320
	0 to 10	1.00	589	828	991	557	704	839
	10.1 to 20	1.00	1020	1169	1332	1020	1168	1308
	20.1 to 30	1.00	1488	1632	1764	1488	1632	1764
	0 to 10	1.25	736	1034	1236	696	881	1048
	10.1 to 20	1.25	1272	1464	1668	1272	1464	1632
	20.1 to 30	1.25	1860	2040	2208	1860	2040	2208
$30 < H+H_S \leq 35$	0 to 10	0.75	464	683	826	418	559	677
	10.1 to 20	0.75	766	937	1081	766	907	1025
	20.1 to 30	0.75	1114	1254	1368	1114	1254	1368
	30.1 to 35	0.75	1284	1428	1548	1284	1428	1548
	0 to 10	1.00	619	910	1102	557	745	902
	10.1 to 20	1.00	1020	1248	1440	1020	1212	1368
	20.1 to 30	1.00	1488	1668	1824	1488	1668	1824
	30.1 to 35	1.00	1716	1908	2064	1716	1908	2064
	0 to 10	1.25	773	1138	1380	696	931	1127
	10.1 to 20	1.25	1272	1560	1800	1272	1512	1704
	20.1 to 30	1.25	1860	2088	2292	1860	2088	2292
	30.1 to 35	1.25	2148	2376	2580	2148	2376	2580

NOTES

THE LONG-TERM GEOSYNTHETIC DESIGN STRENGTH "T_{al}" SHALL BE DETERMINED IN ACCORDANCE WITH WSDOT STANDARD PRACTICE T925. SEE QUALIFIED PRODUCTS LIST FOR PRODUCTS IN WHICH "T_{al}" HAS BEEN DETERMINED.

"H", "H_S", "L", AND "Z" ARE GRAPHICALLY DEFINED ON SHEET 1.

"Z" IS THE DISTANCE FROM THE TOP OF WALL (AS SHOWN) TO A GEOSYNTHETIC LAYER, AND IS USED TO DETERMINE "T_{al}" FOR THAT LAYER.

COLUMN "B" IS A REFERENCE FOR STANDARD PLAN D-3a.

TONY M. ALLEN
STATE OF WASHINGTON
25339
REGISTERED
PROFESSIONAL ENGINEER

EXPIRES JULY 1, 2007

PERMANENT GEOSYNTHETIC WALL TYPES 1 ~ 6 STANDARD PLAN D-3

SHEET 2 OF 3 SHEETS

APPROVED FOR PUBLICATION

Harold J. Peterfeso — STATE DESIGN ENGINEER — *07-13-05* — DATE

Washington State Department of Transportation

EFFECTIVE: APRIL 2, 2007 TO JANUARY 6, 2008

EFFECTIVE: APRIL 2, 2007 TO JANUARY 6, 2008

DRAWN BY: MARK SUJKA

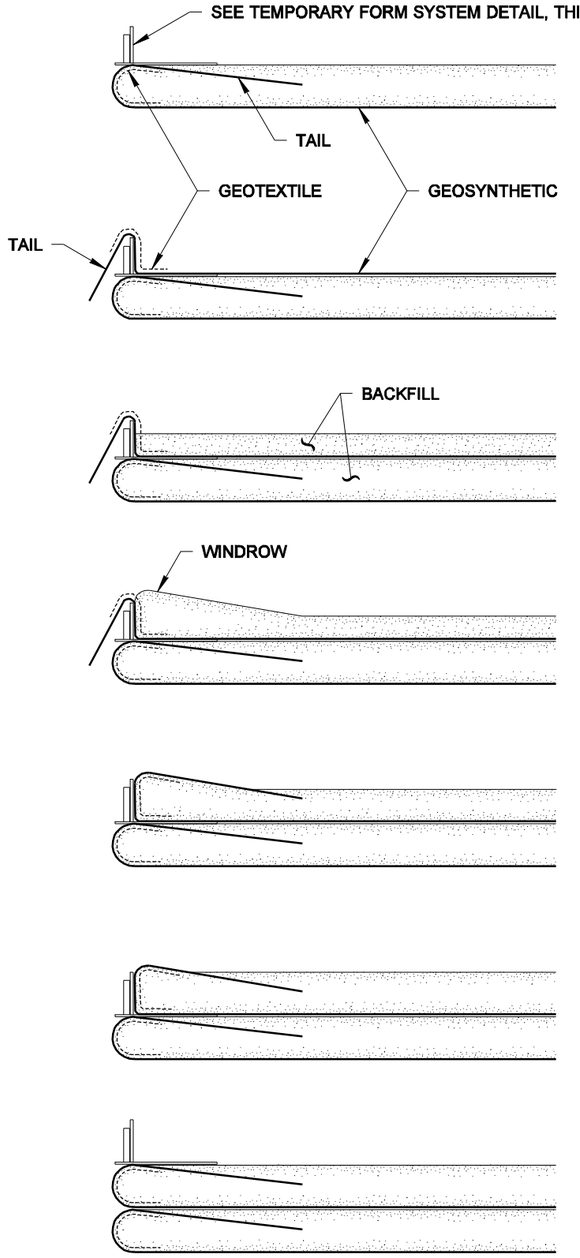

1. SET FORM ON COMPLETED LIFT.
2. UNROLL GEOSYNTHETIC AND POSITION IT SO THAT A 4' - 0" WIDE "TAIL" DRAPES OVER THE FORM. IF A GEOGRID IS USED FOR THE GEOSYNTHETIC REINFORCEMENT, POSITION GEOTEXTILE TO PREVENT BACKFILL FROM SPILLING THROUGH GEOGRID OPENINGS.
3. PLACE THE BACKFILL UNTIL THE BACKFILL IS UP TO HALF OF THE REQUIRED VERTICAL GEOSYNTHETIC LAYER SPACING.
4. PLACE A WINDROW TO SLIGHTLY GREATER THAN FULL LIFT HEIGHT AGAINST THE FORM.
5. PLACE THE GEOSYNTHETIC "TAIL" OVER THE WINDROW AND LOCK INTO PLACE WITH BACKFILL.
6. COMPLETE BACKFILLING UNTIL THE COMPACTED BACKFILL LAYER THICKNESS IS EQUAL TO THE REQUIRED VERTICAL GEOSYNTHETIC LAYER SPACING.
7. THE FORM MAY BE LEFT IN PLACE WHILE CONSTRUCTING THE NEXT LAYER (SEE NOTE 2), OTHERWISE, RESET THE FORM AND REPEAT THE SEQUENCE.

GEOSYNTHETIC WALL CONSTRUCTION SEQUENCE

(SECTION VIEW)

EFFECTIVE: APRIL 2, 2007 TO JANUARY 6, 2008

EFFECTIVE: APRIL 2, 2007 TO JANUARY 6, 2008

NOTES

1. USE OF THE TEMPORARY FORM SYSTEM, AS DETAILED IN THIS PLAN, IS OPTIONAL.
2. TO HELP MAINTAIN THE WALL FACE BATTER, LEAVE THE FORM SYSTEM FOR THE PRECEDING LAYER IN PLACE WHILE CONSTRUCTING THE NEXT LAYER. WHEN THE UPPER LAYER IS COMPLETE, REMOVE THE FORM SYSTEM FROM THE LOWER LAYER AND RESET IT FOR THE NEXT LAYER. SEE BELOW.

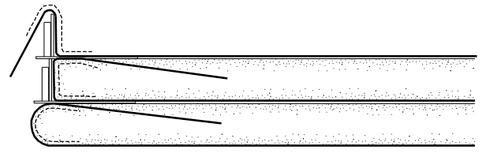

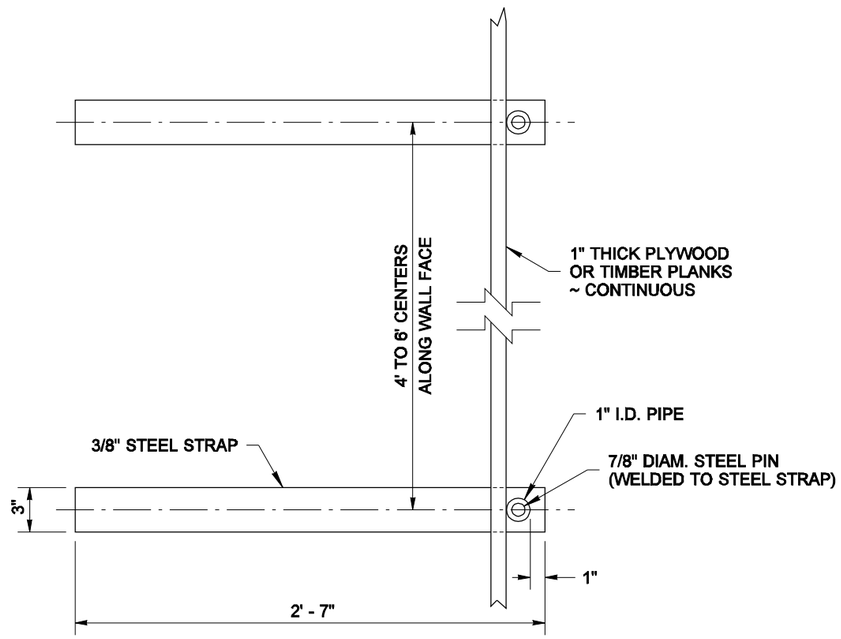

PLAN

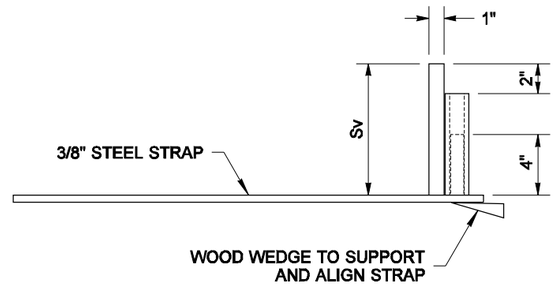

ELEVATION

TEMPORARY FORM SYSTEM DETAIL

TONY M. ALLEN
STATE OF WASHINGTON
25339
REGISTERED
PROFESSIONAL ENGINEER

EXPIRES JULY 1, 2007

NOTE: THIS PLAN IS NOT A LEGAL ENGINEERING DOCUMENT BUT AN ELECTRONIC DUPLICATE. THE ORIGINAL, SIGNED BY THE ENGINEER AND APPROVED FOR PUBLICATION, IS KEPT ON FILE AT THE WASHINGTON STATE DEPARTMENT OF TRANSPORTATION. A COPY MAY BE OBTAINED UPON REQUEST.

PERMANENT GEOSYNTHETIC WALL TYPES 1 ~ 6 STANDARD PLAN D-3

SHEET 3 OF 3 SHEETS

APPROVED FOR PUBLICATION

Harold J. Peterfeso — STATE DESIGN ENGINEER

07-13-05 — DATE

Washington State Department of Transportation

EFFECTIVE: APRIL 2, 2007 TO JANUARY 6, 2008

EFFECTIVE: APRIL 2, 2007 TO JANUARY 6, 2008

EFFECTIVE: APRIL 2, 2007 TO JANUARY 6, 2008

DRAWN BY: MARK SUJKA

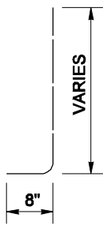

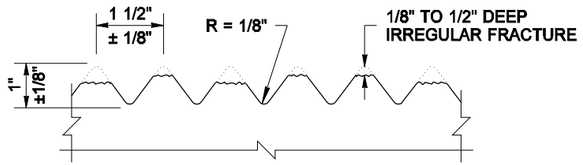

PLAN VIEW

FRACTURED FIN FINISH DETAIL

FOR CAST-IN-PLACE FASCIA ONLY

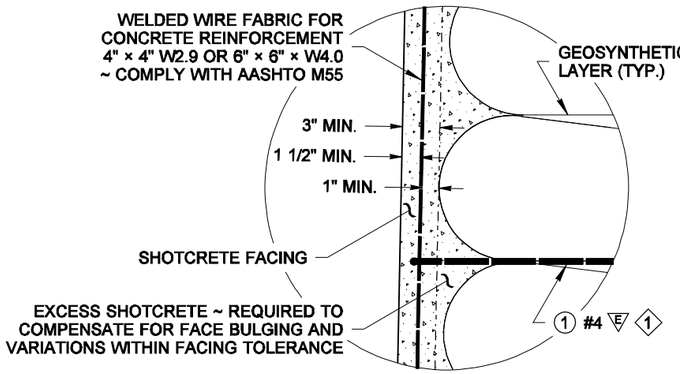

SHOTCRETE DETAIL

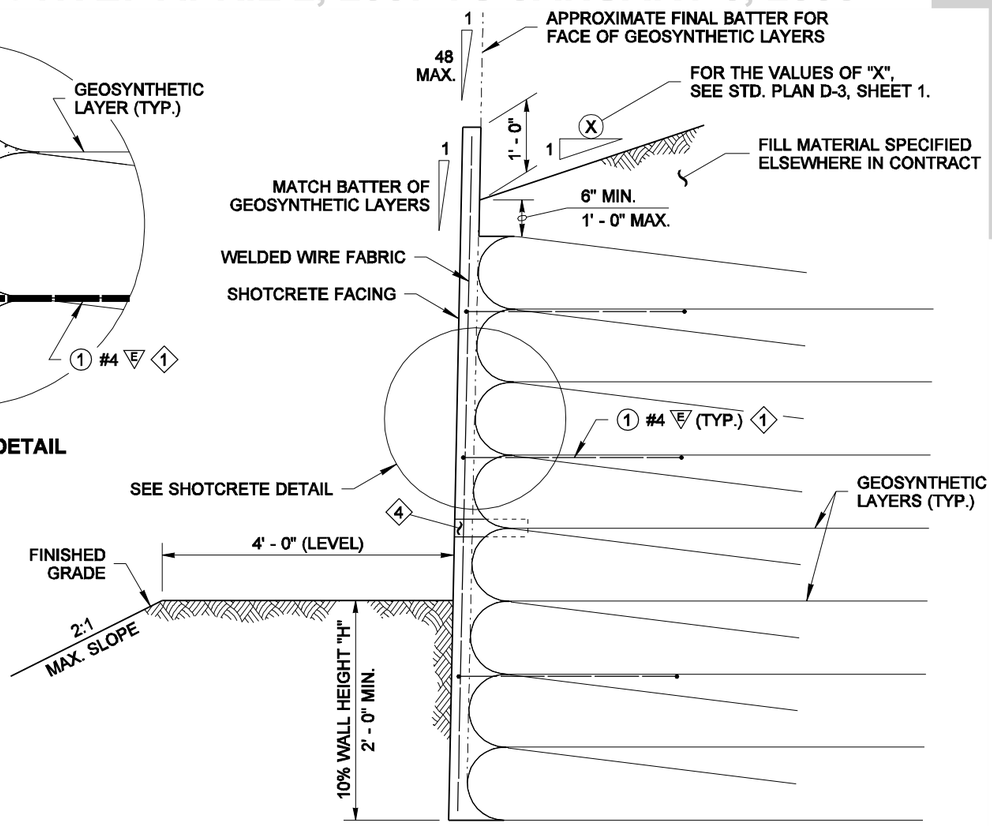

TYPICAL SECTION

PERMANENT GEOSYNTHETIC RETAINING WALL WITH SHOTCRETE FACING

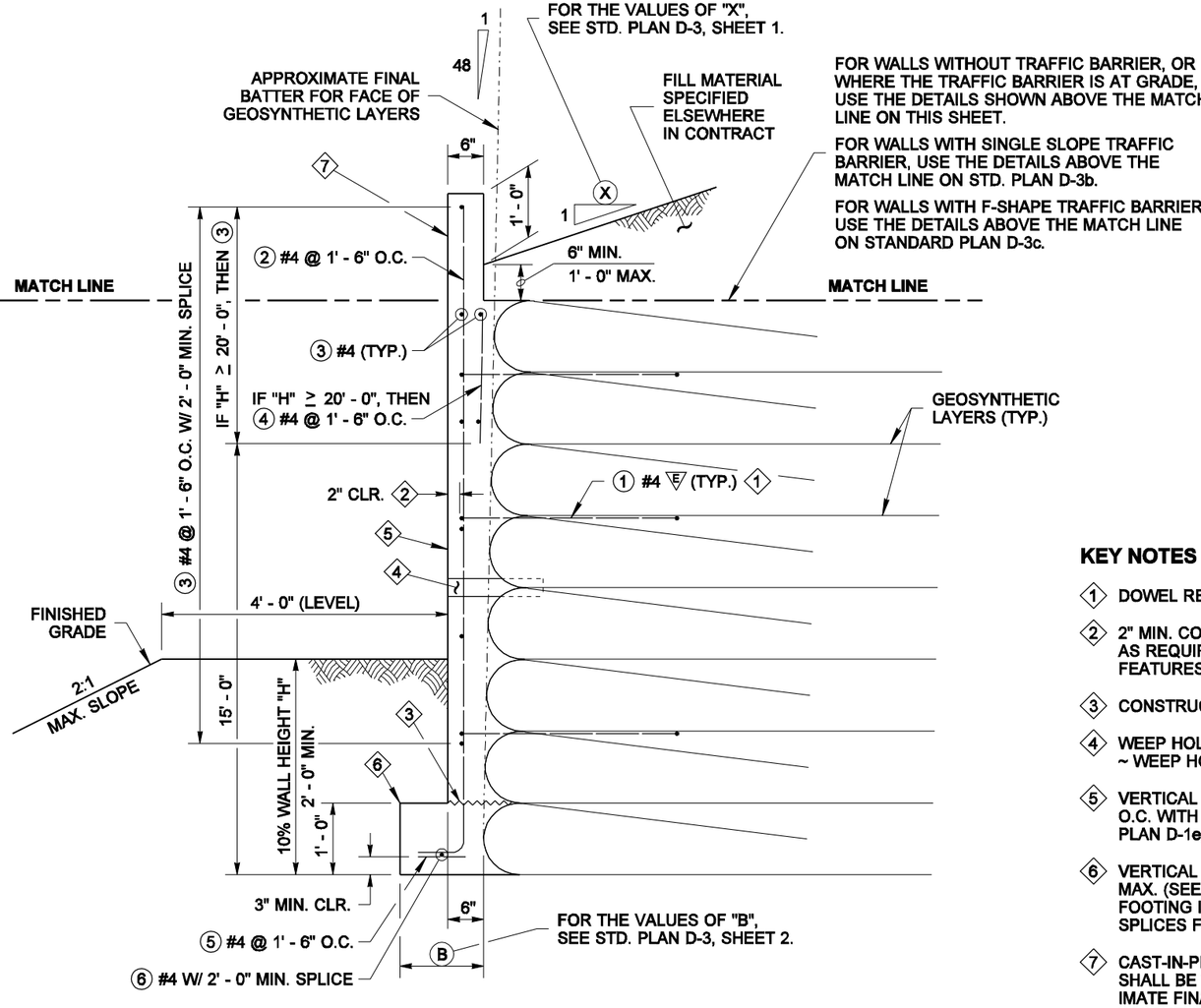

FOR WALLS WITHOUT TRAFFIC BARRIER, OR WHERE THE TRAFFIC BARRIER IS AT GRADE, USE THE DETAILS SHOWN ABOVE THE MATCH LINE ON THIS SHEET.

FOR WALLS WITH SINGLE SLOPE TRAFFIC BARRIER, USE THE DETAILS ABOVE THE MATCH LINE ON STD. PLAN D-3b.

FOR WALLS WITH F-SHAPE TRAFFIC BARRIER, USE THE DETAILS ABOVE THE MATCH LINE ON STANDARD PLAN D-3c.

TYPICAL SECTION

PERMANENT GEOSYNTHETIC RETAINING WALL WITH CAST-IN-PLACE CONCRETE FASCIA

KEY NOTES

◇1 DOWEL REINFORCEMENT (SEE STANDARD PLAN D-3)

◇2 2" MIN. CONCRETE COVER ~ INCREASE THE COVER AS REQUIRED TO ACCOMMODATE ARCHITECTURAL FEATURES AND FINISH.

◇3 CONSTRUCTION JOINT WITH ROUGHENED SURFACE

◇4 WEEP HOLE IN WALL FACING (SEE STANDARD PLAN D-3) ~ WEEP HOLES SHALL BE KEPT CLEAR OF CONCRETE.

◇5 VERTICAL CONSTRUCTION JOINTS IN FASCIA @ 24' - 0" O.C. WITH 1/2" PREMOLDED JOINT FILLER (SEE STD. PLAN D-1e, SHEET 1, "ELEVATION")

◇6 VERTICAL CONSTRUCTION JOINTS IN FOOTING @ 120' O.C. MAX. (SEE STD. PLAN D-1e, SHEET 1, "ELEVATION"). IF THE FOOTING IS STEPPED, PROVIDE 2' - 0" NON-CONTACT LAP SPLICES FOR THE ⑥ #4 BARS AT EACH STEP.

◇7 CAST-IN-PLACE CONCRETE FASCIA ~ THE FASCIA FACE SHALL BE VERTICAL OR SHALL MATCH THE APPROXIMATE FINAL BATTER OF THE GEOSYNTHETIC LAYERS, WHICHEVER IS SPECIFIED IN THE CONTRACT. THE ④ BARS AND INTERIOR ③ BARS SHALL BE USED ONLY IF THE FACE IS VERTICAL. THE FASCIA FACE SHALL HAVE A FRACTURED FIN FINISH (SEE DETAIL) UNLESS SPECIFIED OTHERWISE IN THE CONTRACT.

NOTES

ALL BARS SHOWN ON THIS PLAN SHALL BE AASHTO M-31 UNLESS OTHERWISE SPECIFIED IN THE CONTRACT.

E = EPOXY COATED

JUGESH KAPUR
STATE OF WASHINGTON
25400
REGISTERED
PROFESSIONAL ENGINEER

EXPIRES MAY 19, 2006

NOTE: THIS PLAN IS NOT A LEGAL ENGINEERING DOCUMENT BUT AN ELECTRONIC DUPLICATE. THE ORIGINAL, SIGNED BY THE ENGINEER AND APPROVED FOR PUBLICATION, IS KEPT ON FILE AT THE WASHINGTON STATE DEPARTMENT OF TRANSPORTATION. A COPY MAY BE OBTAINED UPON REQUEST.

PERMANENT GEOSYNTHETIC WALL FASCIA AND FACING
STANDARD PLAN D-3a

SHEET 1 OF 1 SHEET

APPROVED FOR PUBLICATION

Harold J. Peterfeso — STATE DESIGN ENGINEER

06-30-04 — DATE

Washington State Department of Transportation

EFFECTIVE: APRIL 2, 2007 TO JANUARY 6, 2008

EFFECTIVE: APRIL 2, 2007 TO JANUARY 6, 2008

DRAWN BY: MARK SUJKA

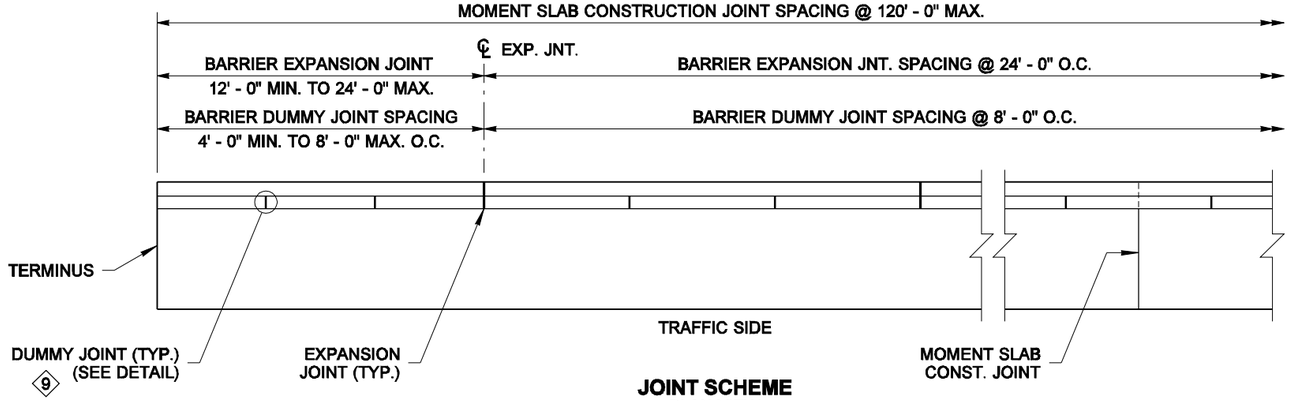

JOINT SCHEME
PLAN VIEW

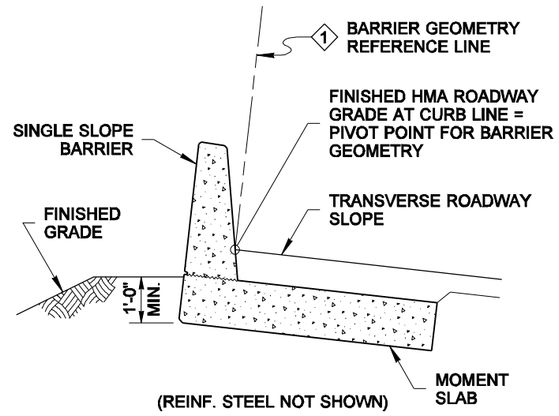

(REINF. STEEL NOT SHOWN)

TYPICAL SECTION
SHOWN AT GRADE

KEY NOTES

1. THE BARRIER GEOMETRY REFERENCE LINE (B.G.R.L.) IS PERPENDICULAR TO THE TRANSVERSE ROADWAY SLOPE (T.R.S.). FOR SUPERELEVATED TRANSVERSE ROADWAY SLOPES, THE B.G.R.L. ON THE LOW SIDE OF THE ROADWAY SHALL BE PERPENDICULAR TO THE T.R.S. UP TO A MAXIMUM OF 8% SUPERELEVATION; THE B.G.R.L. ON THE HIGH SIDE SHALL ALWAYS BE PERPENDICULAR TO THE T.R.S.
2. JUNCTION BOX & PULL BOX ~ 8" × 8" × 1' - 6" NEMA 4 X S.S. (TYP.). JUNCTION BOX CAN BE RECESSED 1/2" MAX. SEE SPECIAL PROVISIONS. SIZE CONDUIT PER WIRING SCHEDULE, SEE ELECTRICAL PLANS.
3. 1 1/2" MIN. CONCRETE COVER ~ INCREASE THE COVER AS REQUIRED TO ACCOMMODATE ARCHITECTURAL FEATURES AND FINISH.
4. CONSTRUCTION JOINT WITH ROUGHENED SURFACE
5. THE NOTCH, DETAILED BY THESE DIMENSIONS AND SPECIFICATIONS, IS REQUIRED ONLY IF THE BARRIER IS ON WALL FACING.
6. RUSTICATION ~ SEE RUSTICATION DETAIL
7. FOR STRUCTURAL DETAILS BELOW THE MATCH LINE, SEE STANDARD PLANS D-3 AND D-3a.
8. 1/2" EXPANSION JOINT WITH PREMOLDED JOINT FILLER
9. INSTALL BARRIER DUMMY JOINTS ON TRAFFIC SIDE ONLY WHEN ARCHITECTURAL FEATURES ARE SPECIFIED.

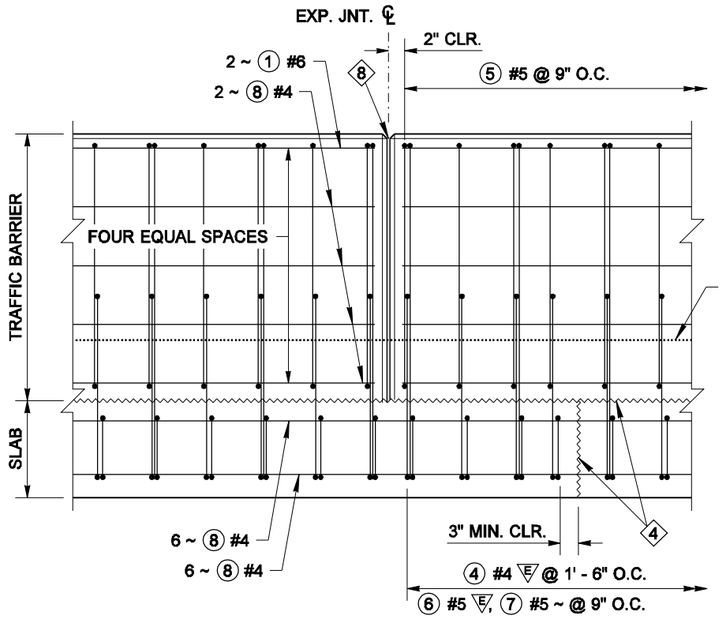

ELEVATION

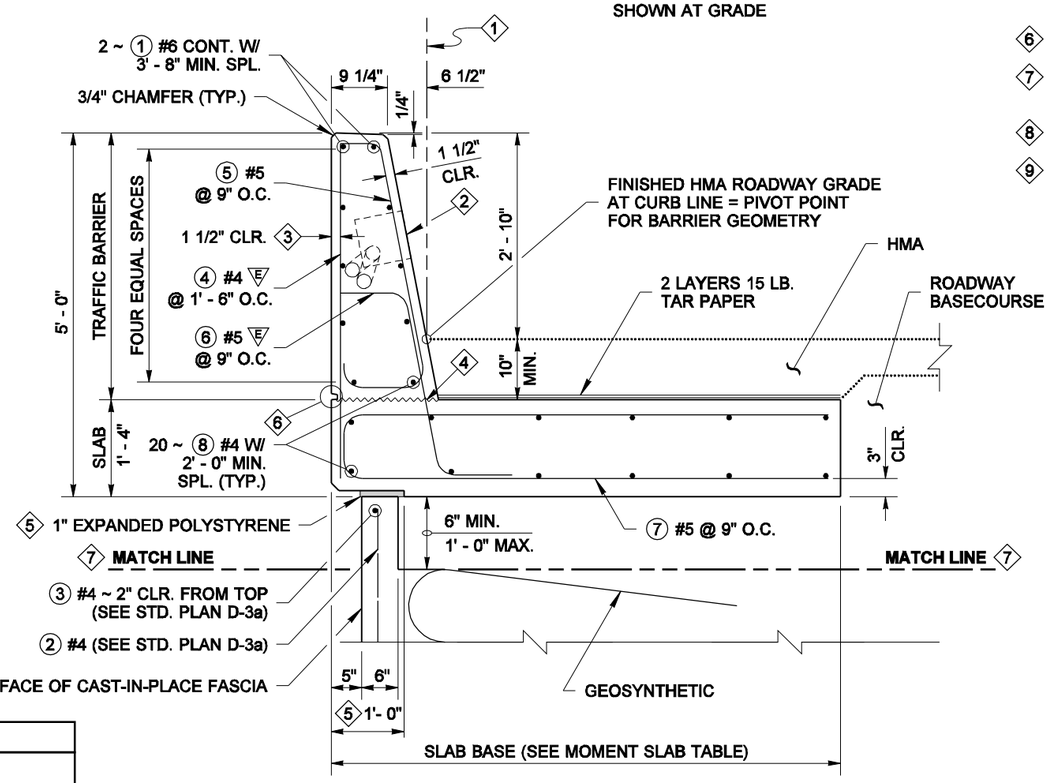

TYPICAL SECTION
SHOWN ON WALL

MOMENT SLAB TABLE		
SLAB LENGTH	SLAB BASE	
	ON WALL	AT GRADE
GREATER THAN 80' - 0"	7' - 0"	5' - 0"
BETWEEN 60' - 0" & 80' - 0"	8' - 0"	6' - 0"
BETWEEN 40' - 0" & 60' - 0"	9' - 0"	7' - 0"
LESS THAN 40' - 0"	CONTACT BRIDGE OFFICE	

REINFORCING STEEL BENDING DIAGRAM

ALL REINFORCING BARS SHOWN ON THIS PLAN SHALL BE AASHTO M 31 UNLESS OTHERWISE NOTED.

ALL DIMENSIONS ARE OUT TO OUT

E = EPOXY COATED

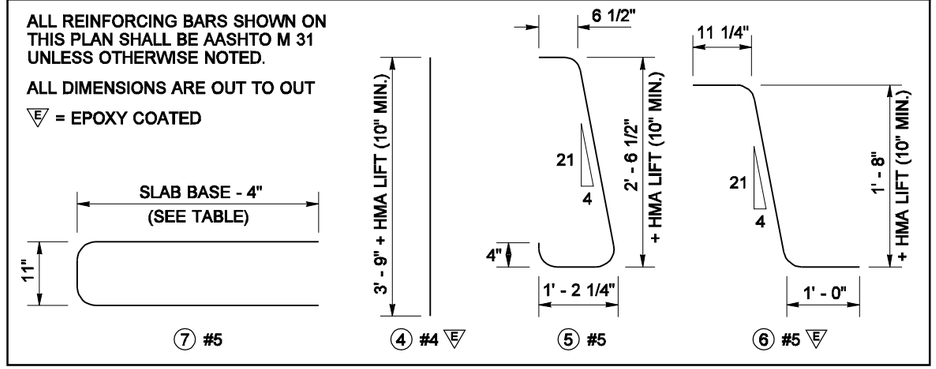

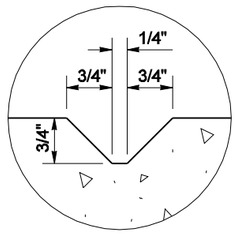

DUMMY JOINT DETAIL

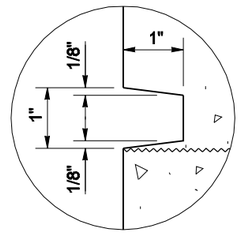

RUSTICATION DETAIL



EXPIRES MAY 19, 2006

NOTE: THIS PLAN IS NOT A LEGAL ENGINEERING DOCUMENT BUT AN ELECTRONIC DUPLICATE. THE ORIGINAL, SIGNED BY THE ENGINEER AND APPROVED FOR PUBLICATION, IS KEPT ON FILE AT THE WASHINGTON STATE DEPARTMENT OF TRANSPORTATION. A COPY MAY BE OBTAINED UPON REQUEST.

PERMANENT GEOSYNTHETIC WALL SINGLE SLOPE BARRIER STANDARD PLAN D-3b

SHEET 1 OF 1 SHEET

APPROVED FOR PUBLICATION

Harold J. Peterfeso — STATE DESIGN ENGINEER — *06-30-04* — DATE

Washington State Department of Transportation

EFFECTIVE: APRIL 2, 2007 TO JANUARY 6, 2008

EFFECTIVE: APRIL 2, 2007 TO JANUARY 6, 2008

DRAWN BY: MARK SUJKA

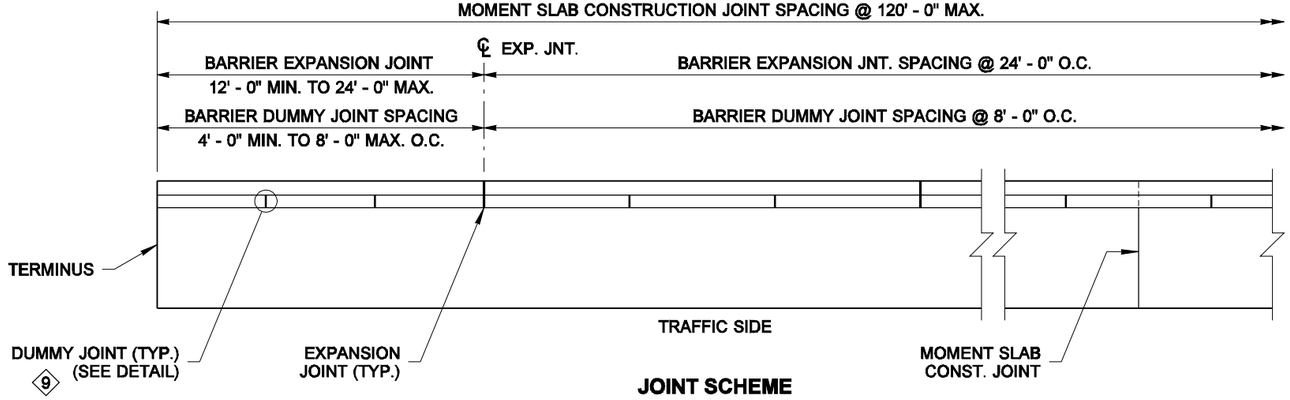

JOINT SCHEME
PLAN VIEW

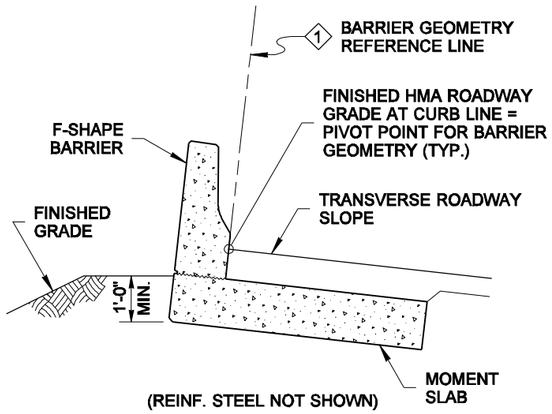

(REINF. STEEL NOT SHOWN)

TYPICAL SECTION
SHOWN AT GRADE

KEY NOTES

1. THE BARRIER GEOMETRY REFERENCE LINE (B.G.R.L.) IS PERPENDICULAR TO THE TRANSVERSE ROADWAY SLOPE (T.R.S.). FOR SUPERELEVATED TRANSVERSE ROADWAY SLOPES, THE B.G.R.L. ON THE LOW SIDE OF THE ROADWAY SHALL BE PERPENDICULAR TO THE T.R.S. UP TO A MAXIMUM OF 8% SUPERELEVATION; THE B.G.R.L. ON THE HIGH SIDE SHALL ALWAYS BE PERPENDICULAR TO THE T.R.S.
2. JUNCTION BOX & PULL BOX ~ 8" × 8" × 1' - 6" NEMA 4 X S.S. (TYP.). JUNCTION BOX CAN BE RECESSED 1/2" MAX. SEE SPECIAL PROVISIONS. SIZE CONDUIT PER WIRING SCHEDULE, SEE ELECTRICAL PLANS.
3. 1 1/2" MIN. CONCRETE COVER ~ INCREASE THE COVER AS REQUIRED TO ACCOMMODATE ARCHITECTURAL FEATURES AND FINISH.
4. CONSTRUCTION JOINT WITH ROUGHENED SURFACE
5. THE NOTCH, DETAILED BY THESE DIMENSIONS AND SPECIFICATIONS, IS REQUIRED ONLY IF THE BARRIER IS ON WALL FACING.
6. RUSTICATION ~ SEE RUSTICATION DETAIL
7. FOR STRUCTURAL DETAILS BELOW THE MATCH LINE, SEE STANDARD PLANS D-3 AND D-3a.
8. 1/2" EXPANSION JOINT WITH PREMOLDED JOINT FILLER
9. INSTALL BARRIER DUMMY JOINTS ON TRAFFIC SIDE ONLY WHEN ARCHITECTURAL FEATURES ARE SPECIFIED.

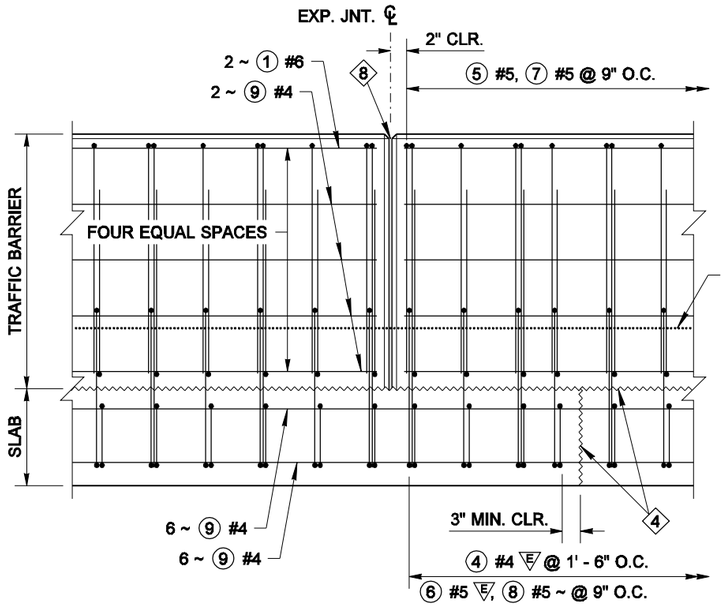

ELEVATION

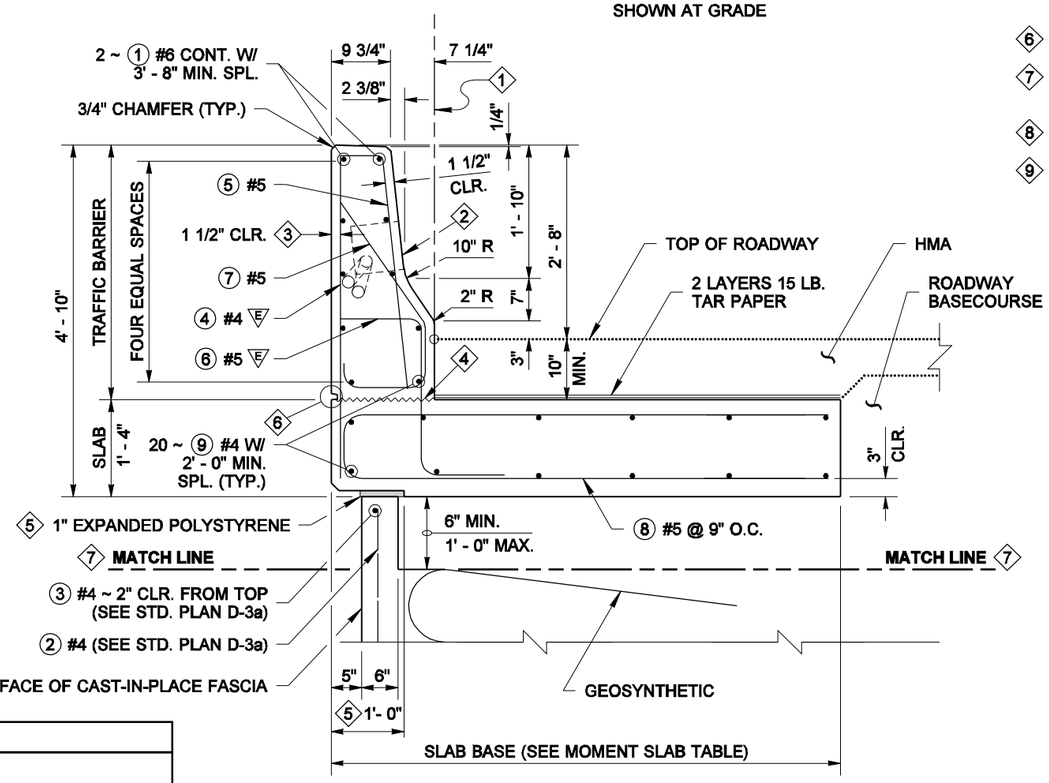

TYPICAL SECTION
SHOWN ON WALL

MOMENT SLAB TABLE

SLAB LENGTH	SLAB BASE	
	ON WALL	AT GRADE
GREATER THAN 80' - 0"	7' - 0"	5' - 0"
BETWEEN 60' - 0" & 80' - 0"	8' - 0"	6' - 0"
BETWEEN 40' - 0" & 60' - 0"	9' - 0"	7' - 0"
LESS THAN 40' - 0"	CONTACT BRIDGE OFFICE	

REINFORCING STEEL BENDING DIAGRAM

ALL REINFORCING BARS SHOWN ON THIS PLAN SHALL BE AASHTO M 31 UNLESS OTHERWISE NOTED.

ALL DIMENSIONS ARE OUT TO OUT

E = EPOXY COATED

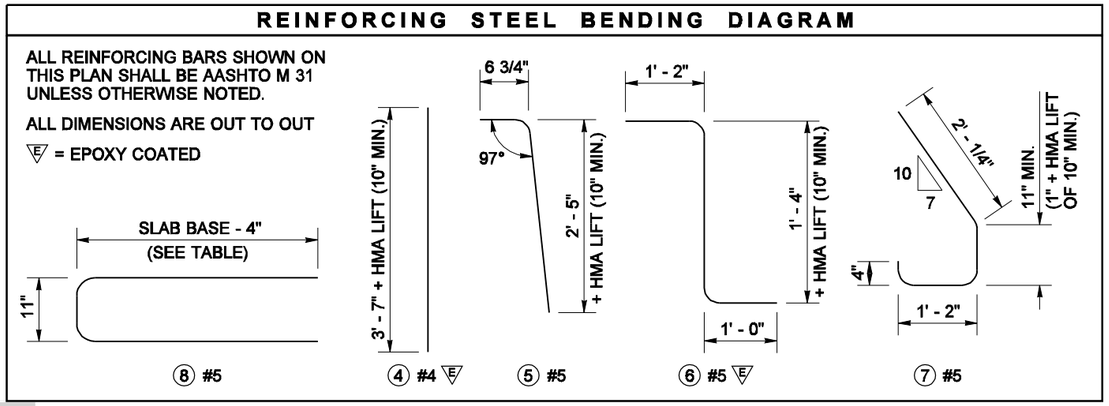

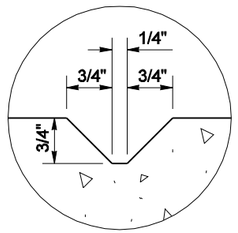

DUMMY JOINT DETAIL

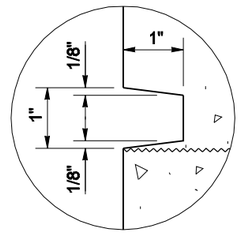

RUSTICATION DETAIL

JUGESH KAPUR
STATE OF WASHINGTON
25400
REGISTERED
PROFESSIONAL ENGINEER

EXPIRES MAY 19, 2006

NOTE: THIS PLAN IS NOT A LEGAL ENGINEERING DOCUMENT BUT AN ELECTRONIC DUPLICATE. THE ORIGINAL, SIGNED BY THE ENGINEER AND APPROVED FOR PUBLICATION, IS KEPT ON FILE AT THE WASHINGTON STATE DEPARTMENT OF TRANSPORTATION. A COPY MAY BE OBTAINED UPON REQUEST.

PERMANENT GEOSYNTHETIC WALL F - SHAPE BARRIER STANDARD PLAN D-3c

SHEET 1 OF 1 SHEET

APPROVED FOR PUBLICATION

Harold J. Peterfeso — STATE DESIGN ENGINEER — *06-30-04* — DATE

Washington State Department of Transportation

EFFECTIVE: APRIL 2, 2007 TO JANUARY 6, 2008

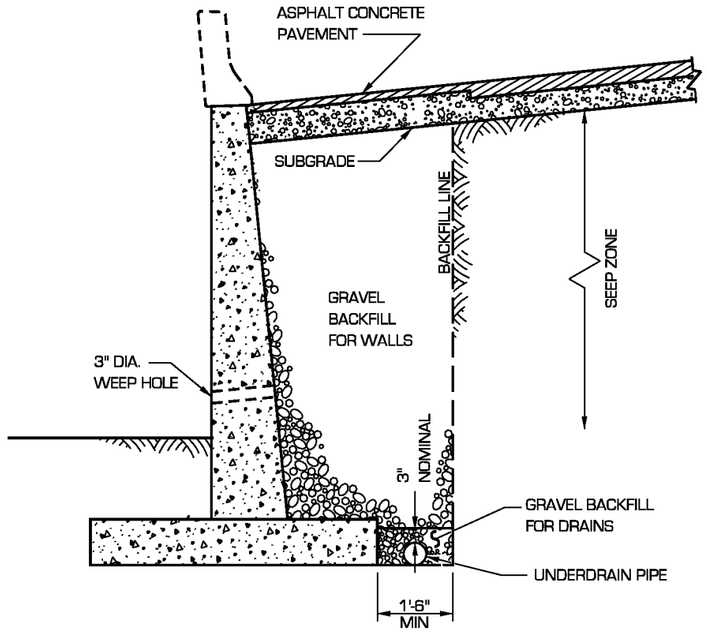

CONDITION A

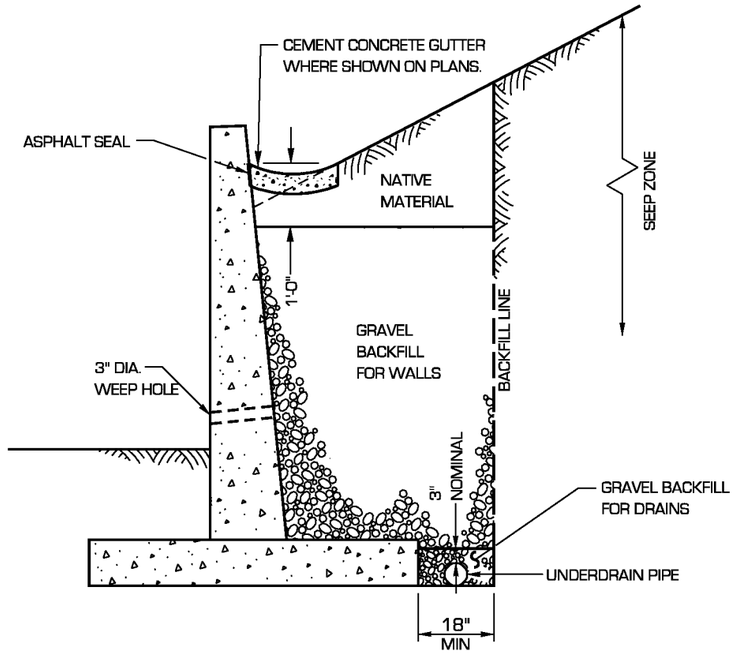

CONDITION B

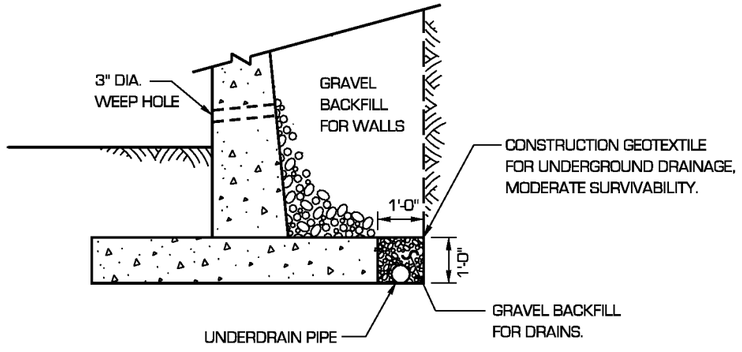

CONDITION A OR CONDITION B WITH GEOTEXTILE

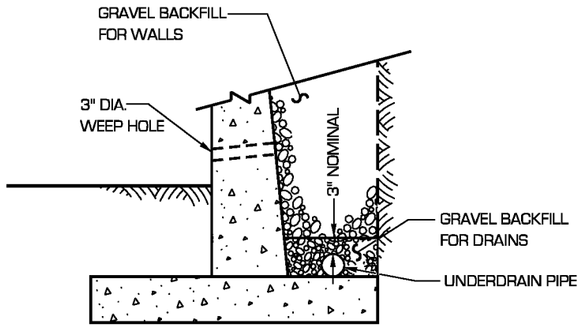

ALTERNATE DETAIL

TYPICAL FOR CONSTRUCTION WITH SHORING.

NOTES

1. SEE CONTRACT FOR BACKFILL LIMITS AND GEOTEXTILE CLASS.

M. MYINT LWIN
STATE OF WASHINGTON
10536
REGISTERED
PROFESSIONAL ENGINEER

EXPIRES JANUARY 17, 1999

BACKFILL AND DRAINAGE FOR RETAINING WALLS

STANDARD PLAN D-4

NOTE: THIS PLAN IS NOT A LEGAL ENGINEERING DOCUMENT BUT AN ELECTRONIC DUPLICATE. THE ORIGINAL, SIGNED BY THE ENGINEER AND APPROVED FOR PUBLICATION, IS KEPT ON FILE AT THE WASHINGTON STATE DEPARTMENT OF TRANSPORTATION. A COPY MAY BE OBTAINED UPON REQUEST.

DATE	REVISION	BY
10/98	REMOVED GUARDRAIL, CURB & METAL CRIB WALLS.	MT

APPROVED FOR PUBLICATION

Clifford E. Mansfield — DEPUTY STATE DESIGN ENGINEER — *12/11/98* DATE

WASHINGTON STATE DEPARTMENT OF TRANSPORTATION
OLYMPIA, WASHINGTON

EFFECTIVE: APRIL 2, 2007 TO JANUARY 6, 2008

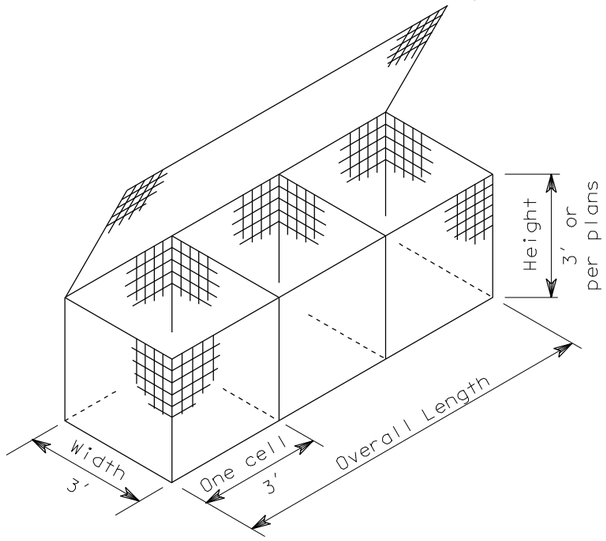

Unit A - 2 cell gabion = 6'
Unit B - 3 cell gabion = 9'
Unit C - 4 cell gabion = 12'

TYPICAL GABION

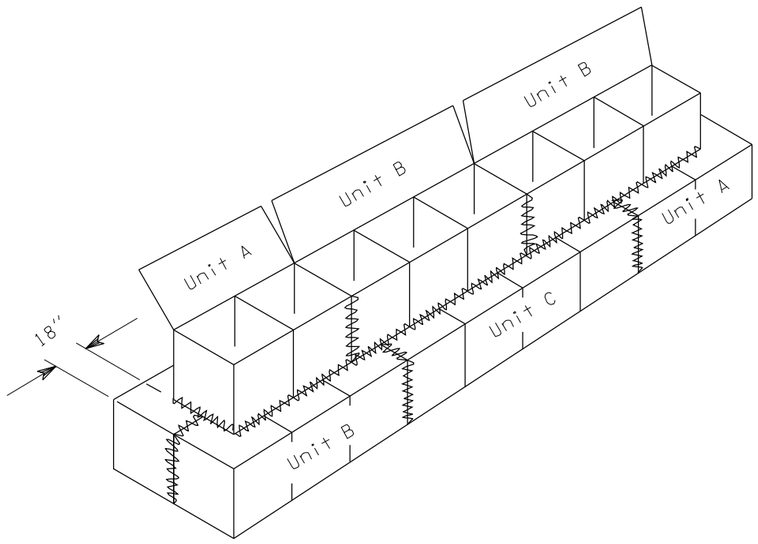

FASTENING ADJACENT BASKETS

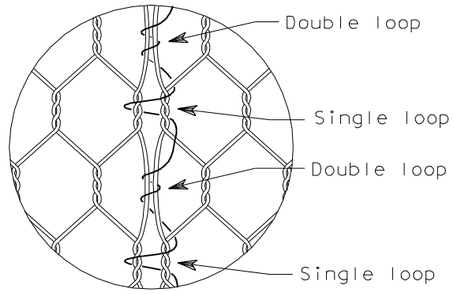

LACING DETAIL

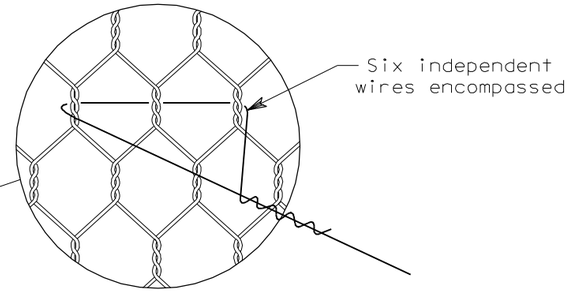

TWISTED FABRIC

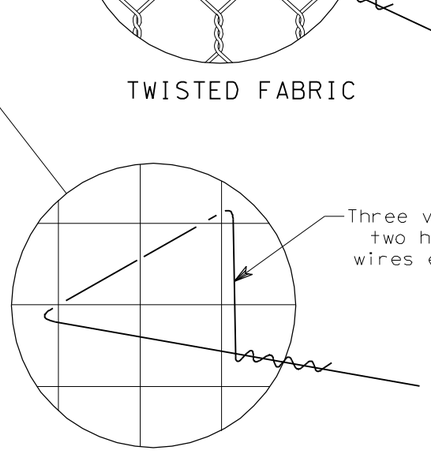

WELDED FABRIC

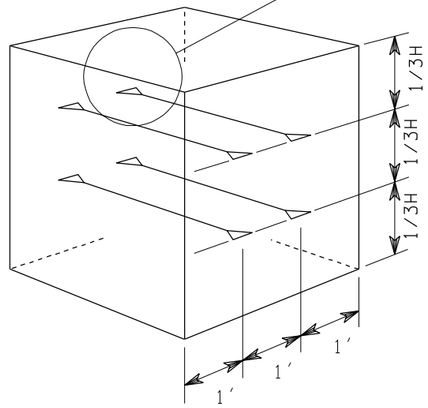

CROSS CONNECTING WIRE
PLACMENT, INTERIOR CELLS
OF FRONT GABIONS

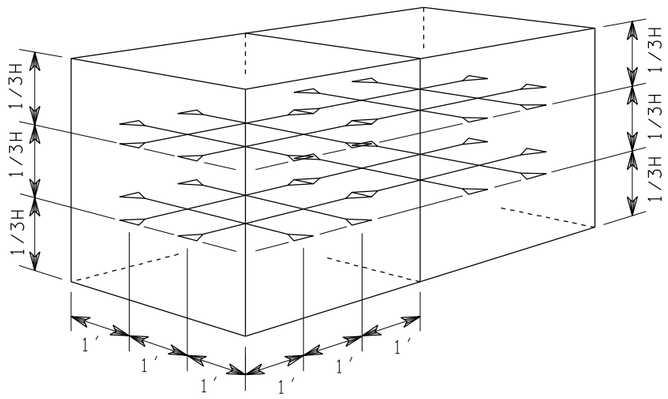

CROSS-CONNECTING WIRE
PLACEMENT, END CELLS

TONY M. ALLEN
STATE OF WASHINGTON
25339
REGISTERED
PROFESSIONAL ENGINEER

EXPIRES JULY 1, 1999

NOTE: THIS PLAN IS NOT A LEGAL ENGINEERING DOCUMENT BUT AN ELECTRONIC DUPLICATE. THE ORIGINAL, SIGNED BY THE ENGINEER AND APPROVED FOR PUBLICATION, IS KEPT ON FILE AT THE WASHINGTON STATE DEPARTMENT OF TRANSPORTATION. A COPY MAY BE OBTAINED UPON REQUEST.

GABIONS

STANDARD PLAN D-6

APPROVED FOR PUBLICATION

Clifford E. Mansfield — DEPUTY STATE DESIGN ENGINEER

6/19/98 — DATE

WASHINGTON STATE DEPARTMENT OF TRANSPORTATION
OLYMPIA, WASHINGTON

EFFECTIVE: APRIL 2, 2007 TO JANUARY 6, 2008

EFFECTIVE: APRIL 2, 2007 TO JANUARY 6, 2008

NOTE:
1. The Contractor may provide two twin base wire rope clips at 3'' O.C. in lieu of three u-bolt type wire rope clips as shown.

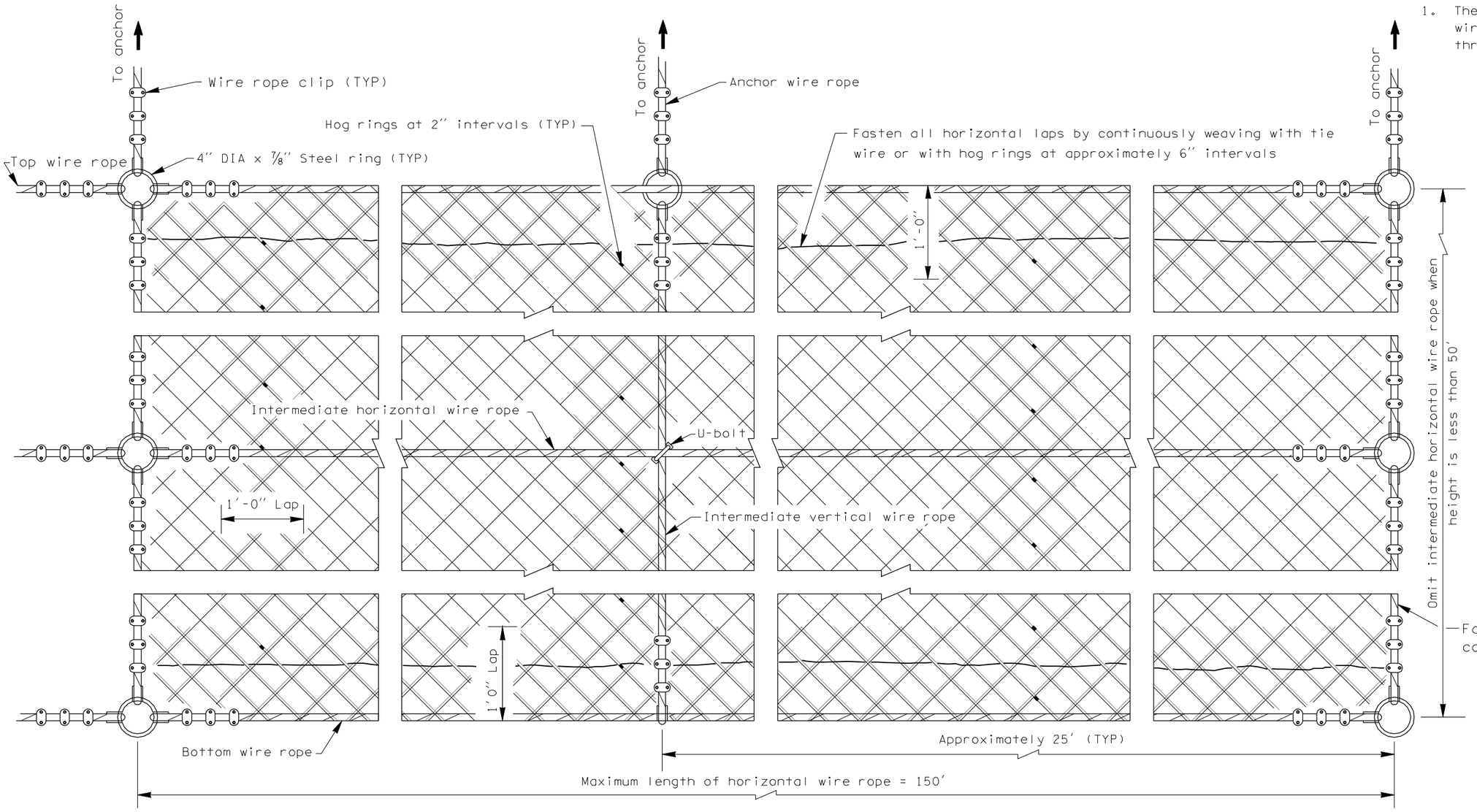

ASSEMBLY DETAILS

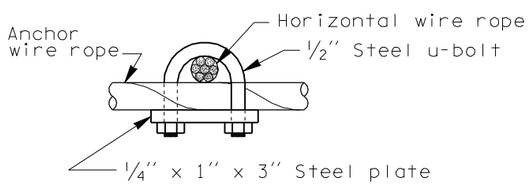

U-BOLT

Use to clamp intermediate horizontal wire ropes to vertical wire ropes

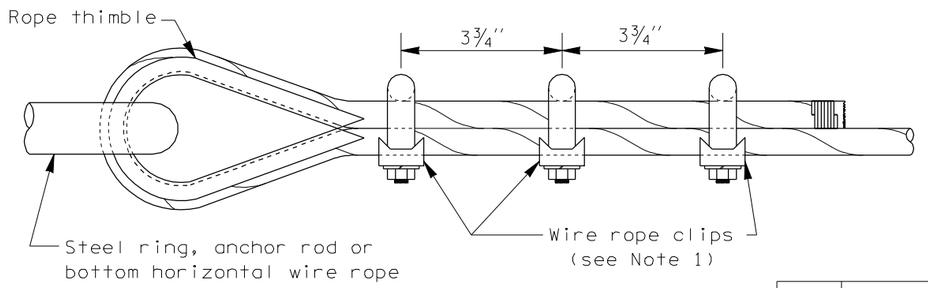

WIRE ROPE CONNECTION

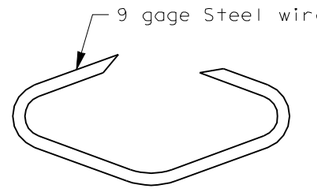

HOG RING

Use for lap connections of netting

TONY M. ALLEN
STATE OF WASHINGTON
25339
REGISTERED
PROFESSIONAL ENGINEER

EXPIRES JULY 1, 2001

NOTE: THIS PLAN IS NOT A LEGAL ENGINEERING DOCUMENT BUT AN ELECTRONIC DUPLICATE. THE ORIGINAL, SIGNED BY THE ENGINEER AND APPROVED, IS ON FILE AT THE WASHINGTON STATE DEPARTMENT OF TRANSPORTATION. A COPY MAY BE OBTAINED UPON REQUEST.

WIRE MESH SLOPE PROTECTION

STANDARD PLAN D-7

APPROVED FOR PUBLICATION

Clifford E. Mansfield 10/06/99

DEPUTY STATE DESIGN ENGINEER — DATE

WASHINGTON STATE DEPARTMENT OF TRANSPORTATION
OLYMPIA, WASHINGTON

DATE	REVISION	BY
9/99	Title changed; cable references changed to wire rope.	JR

EFFECTIVE: APRIL 2, 2007 TO JANUARY 6, 2008

EFFECTIVE: APRIL 2, 2007 TO JANUARY 6, 2008

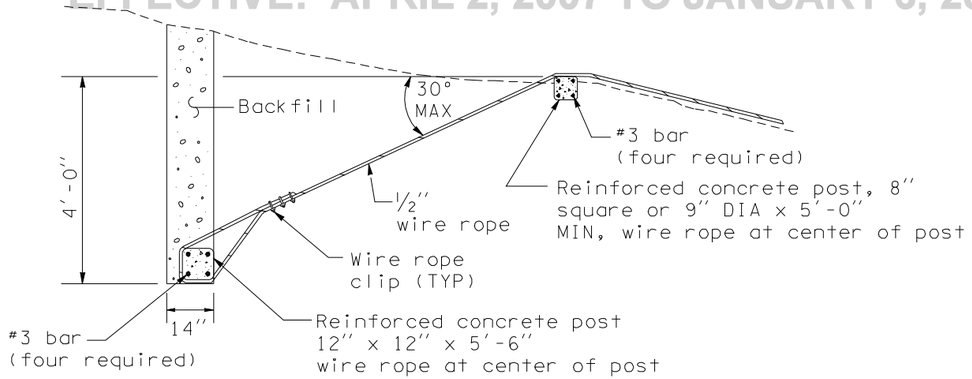

TYPE 1 ANCHOR
(FOR USE IN EARTH)

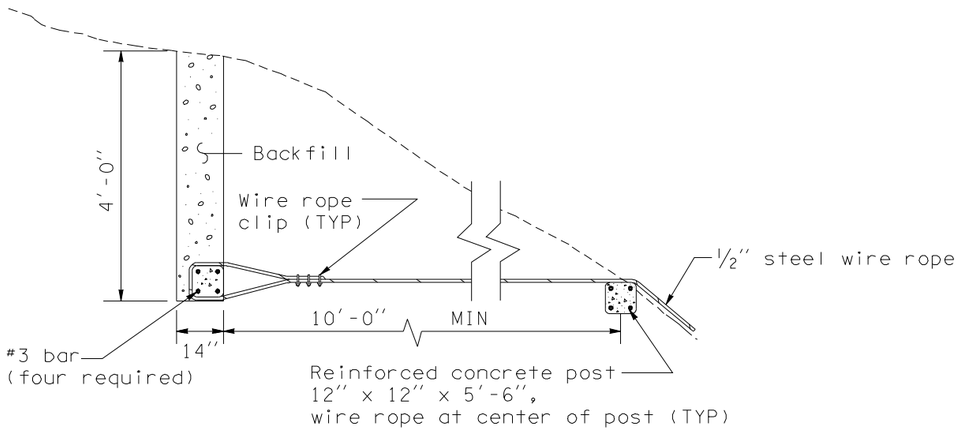

TYPE 2 ANCHOR
(FOR USE IN COMBINED EARTH AND ROCK)

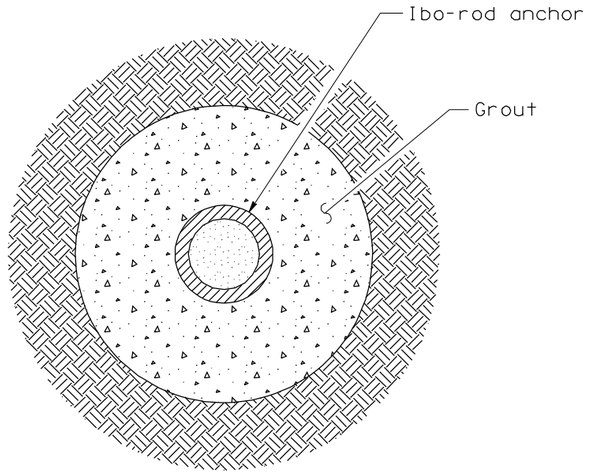

SECTION A-A

NOTE:

1. Two twin base wire rope clips at 3" centers may be substituted for three u-bolted wire rope clips shown.

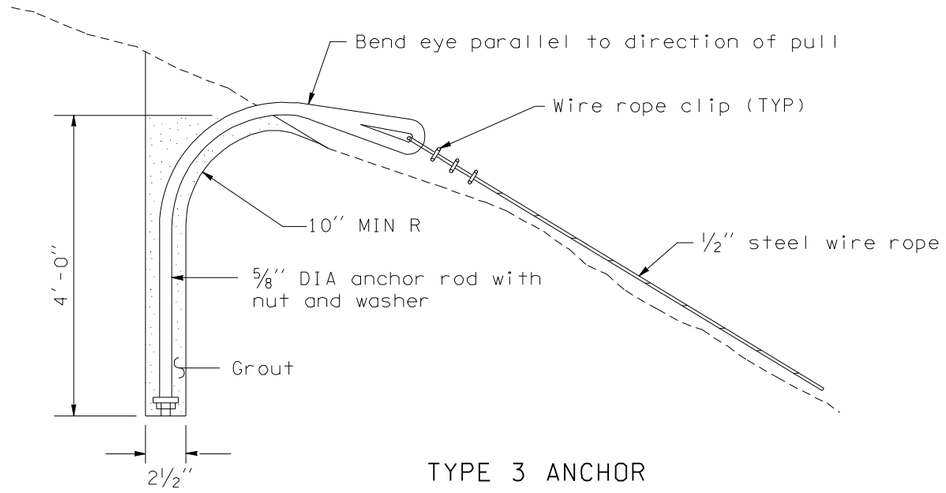

TYPE 3 ANCHOR
(FOR USE IN SOLID ROCK)

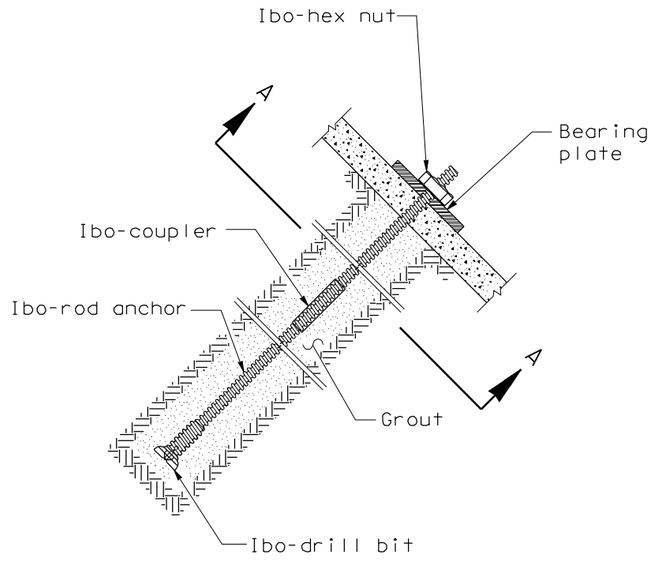

TYPE 4 ANCHOR
(FOR USE IN SOLID ROCK)

TONY M. ALLEN
STATE OF WASHINGTON
25339
REGISTERED
PROFESSIONAL ENGINEER

EXPIRES JULY 1, 2001

NOTE: THIS PLAN IS NOT A LEGAL ENGINEERING DOCUMENT BUT AN ELECTRONIC DUPLICATE. THE ORIGINAL, SIGNED BY THE ENGINEER AND APPROVED FOR PUBLICATION, IS KEPT ON FILE AT THE WASHINGTON STATE DEPARTMENT OF TRANSPORTATION. A COPY MAY BE OBTAINED UPON REQUEST.

WIRE MESH SLOPE PROTECTION

STANDARD PLAN D-7a

DATE	REVISION	BY
9/99	Title changed; cable references changed to wire rope.	JR

APPROVED FOR PUBLICATION

Clifford E. Mansfield *10/06/99*

DEPUTY STATE DESIGN ENGINEER — DATE

WASHINGTON STATE DEPARTMENT OF TRANSPORTATION
OLYMPIA, WASHINGTON

EFFECTIVE: APRIL 2, 2007 TO JANUARY 6, 2008

EFFECTIVE: APRIL 2, 2007 TO JANUARY 6, 2008

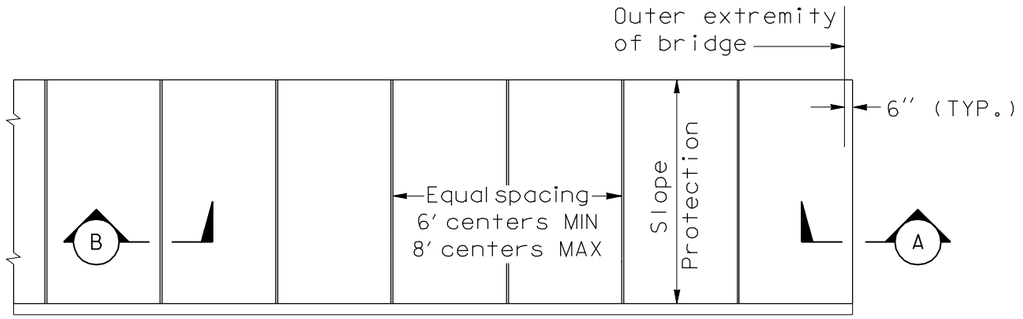

ELEVATION
CONCRETE SLOPE PROTECTION
(Pneumatically placed or poured in place cement concrete shown)

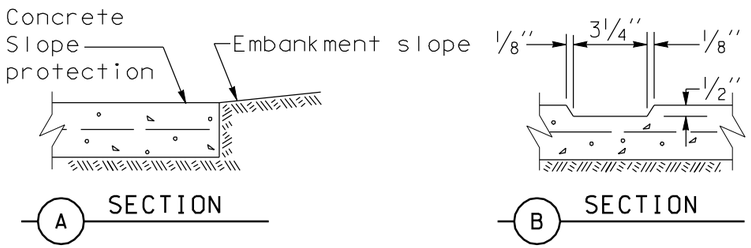

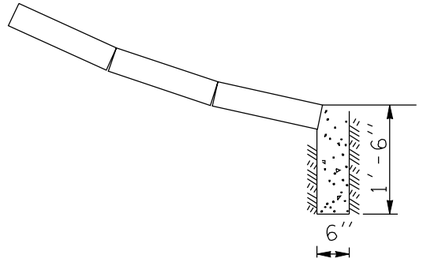

TYPE 1 SLOPE PROTECTION FILL SECTION DETAIL
(Semi-open concrete masonry units shown)

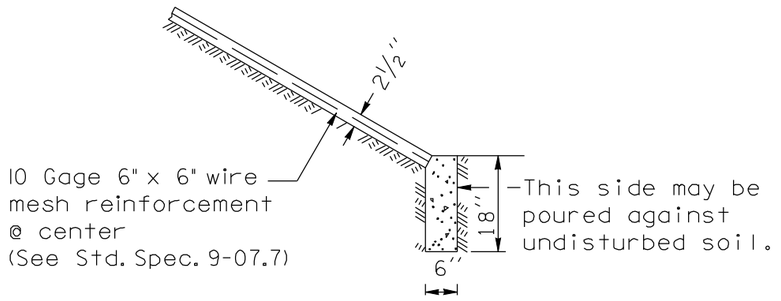

TYPE 2 SLOPE PROTECTION CUT SECTION DETAIL
(Pneumatically placed or poured in place cement concrete shown)

EFFECTIVE: APRIL 2, 2007 TO JANUARY 6, 2008

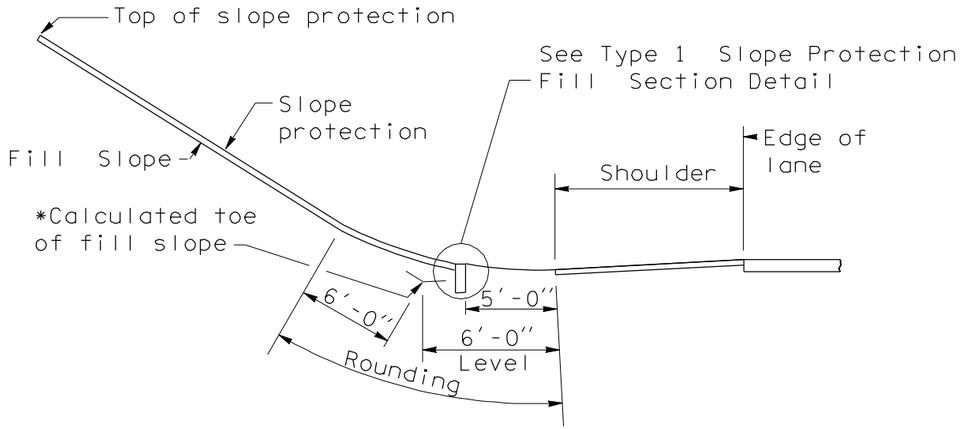

SIDE ELEVATION
(For fill section on lower roadway)

*Fill slope shall be rounded to allow placement of concrete slope protection.

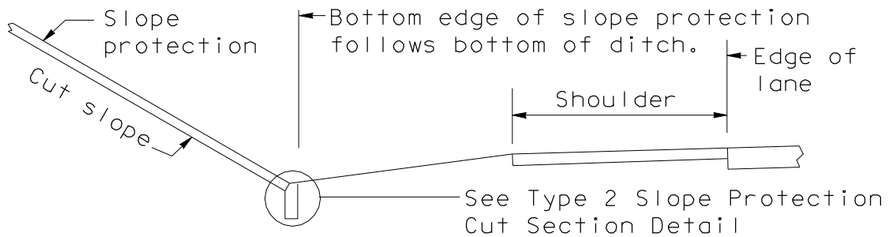

SIDE ELEVATION
(For cut section on lower roadway)

4029
REGISTERED ARCHITECT
ALEXANDER YOUNG
STATE OF WASHINGTON
Principal Architect

NOTE: THIS PLAN IS NOT A LEGAL ENGINEERING DOCUMENT BUT IS TESTIMONIAL IN NATURE. THE ORIGINAL, SIGNED BY THE ENGINEER AND APPROVED FOR PUBLICATION, IS KEPT ON FILE AT THE WASHINGTON STATE DEPARTMENT OF TRANSPORTATION. A COPY MAY BE OBTAINED UPON REQUEST.

CONCRETE SLOPE PROTECTION STANDARD PLAN D-9

SHEET 1 OF 2 SHEETS

APPROVED FOR PUBLICATION

Clifford E. Mansfield — DEPUTY STATE DESIGN ENGINEER — *12/11/98* DATE

WASHINGTON STATE DEPARTMENT OF TRANSPORTATION
OLYMPIA, WASHINGTON

EFFECTIVE: APRIL 2, 2007 TO JANUARY 6, 2008

EFFECTIVE: APRIL 2, 2007 TO JANUARY 6, 2008

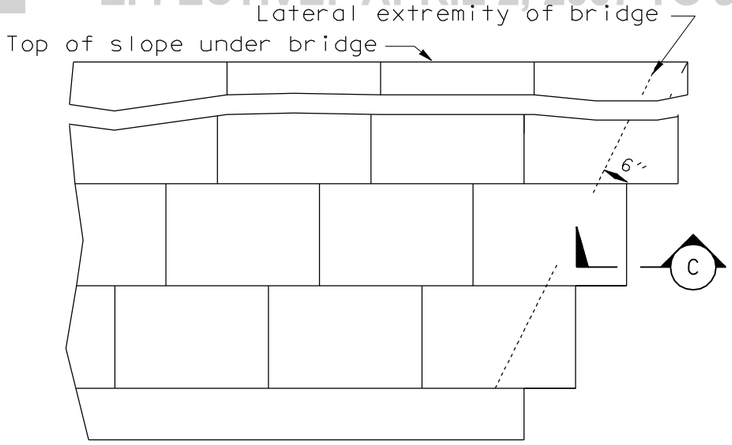

SKEWED BRIDGE PLAN

(Semi-open concrete masonry units shown)

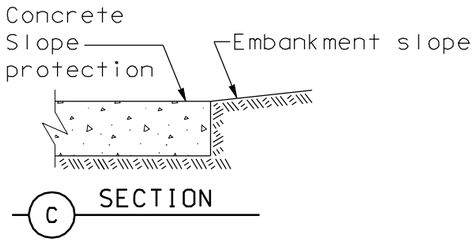

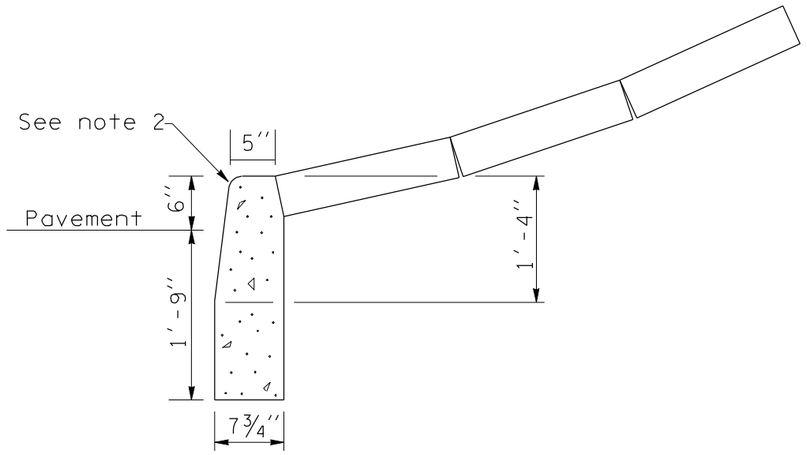

TYPE 3 SLOPE PROTECTION
CURB DETAIL (Elevation)

(Semi-open concrete masonry units shown)

NOTES

1. The design and shape of the semi-open concrete masonry unit shown is only one example of the products that may be used.

2. The Type 3 Slope Protection Curb Detail shall be used only when the lower roadway cross section requires a curb.

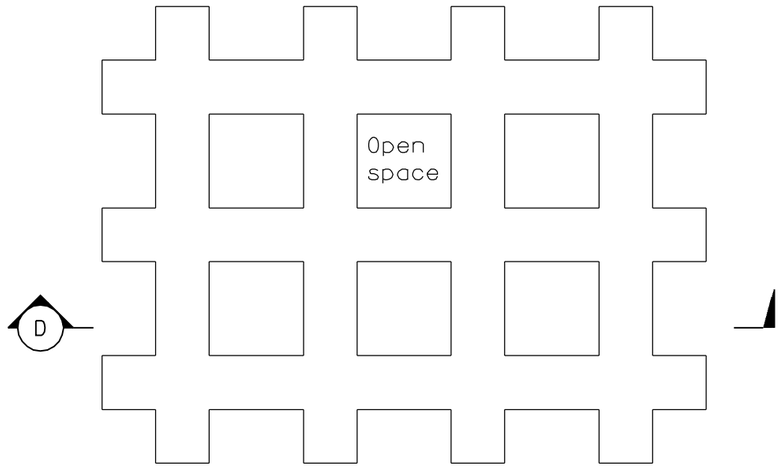

PLAN

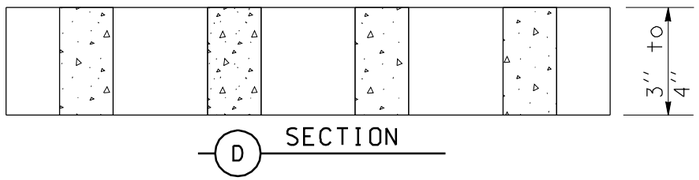

SEMI-OPEN CONCRETE MASONRY UNITS

(See note 1 & 2)

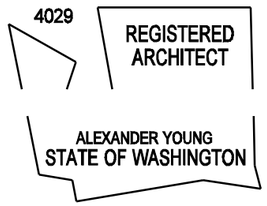

Principal Architect

NOTE: THIS PLAN IS NOT A LEGAL ENGINEERING DOCUMENT BUT AN ELECTRONIC DUPLICATE. THE ORIGINAL, SIGNED BY THE ENGINEER AND APPROVED FOR PUBLICATION, IS KEPT ON FILE AT THE WASHINGTON STATE DEPARTMENT OF TRANSPORTATION. A COPY MAY BE OBTAINED UPON REQUEST.

CONCRETE
SLOPE PROTECTION
STANDARD PLAN D-9

SHEET 2 OF 2 SHEETS

APPROVED FOR PUBLICATION

Clifford E. Mansfield — 12/11/98

DEPUTY STATE DESIGN ENGINEER — DATE

WASHINGTON STATE DEPARTMENT OF TRANSPORTATION
OLYMPIA, WASHINGTON

EFFECTIVE: APRIL 2, 2007 TO JANUARY 6, 2008

EFFECTIVE: APRIL 2, 2007 TO JANUARY 6, 2008

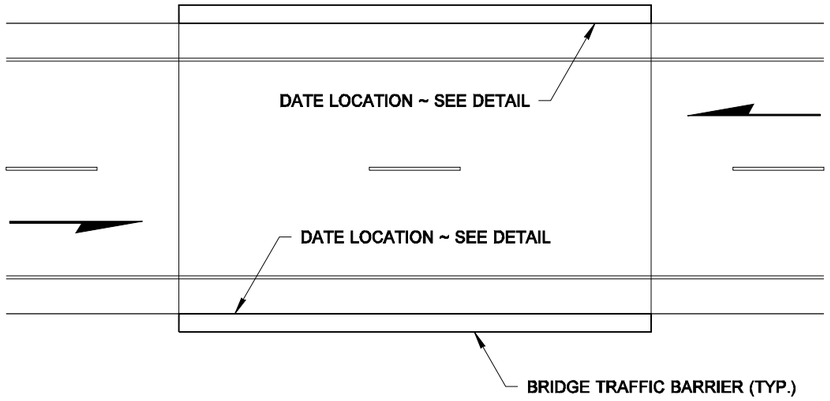

PLAN VIEW

DATE LOCATION ON TWO-WAY BRIDGES

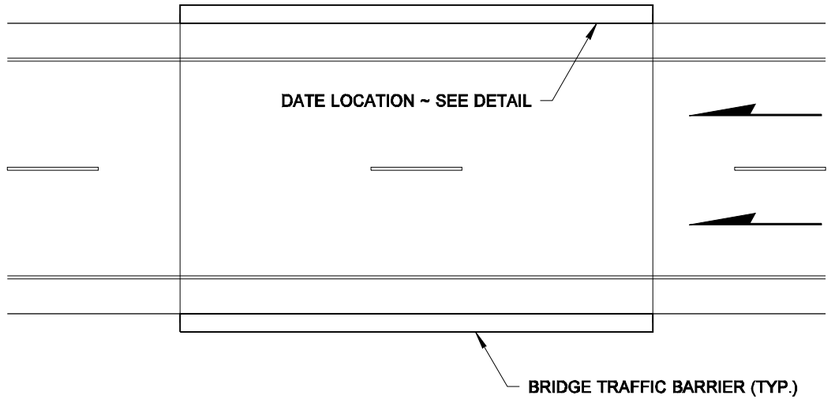

PLAN VIEW

DATE LOCATION ON ONE-WAY BRIDGES

NOTES

1. All numerals are approx. 3 1/4" wide except numeral "1" which is approx. 5/8" wide.
2. Spacing between the numeral "1" and any other numeral is 1". Spacing between all other numerals is 3/4".
3. Traffic Barrier Connections between the bridge and the approaching roadway vary and may consist of concrete barrier extensions. Install the Date Numerals on the traffic barrier of the bridge itself.

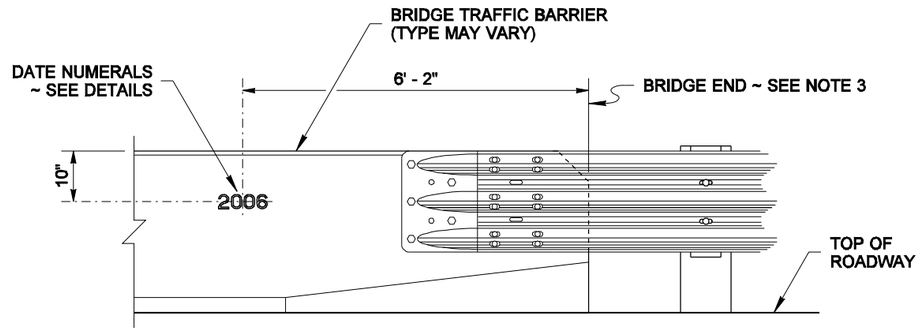

ELEVATION VIEW

DATE LOCATION DETAIL

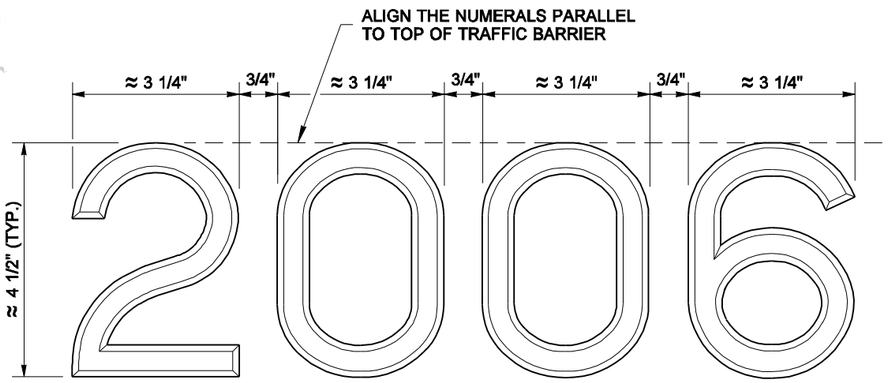

TYPICAL DATE NUMERALS

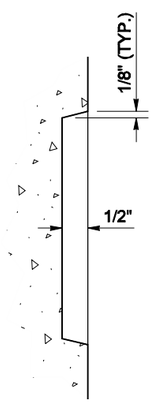

TYPICAL SECTION VIEW

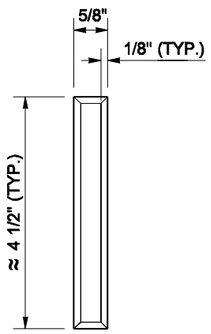

NUMERAL "1"

DATE NUMERAL DETAILS

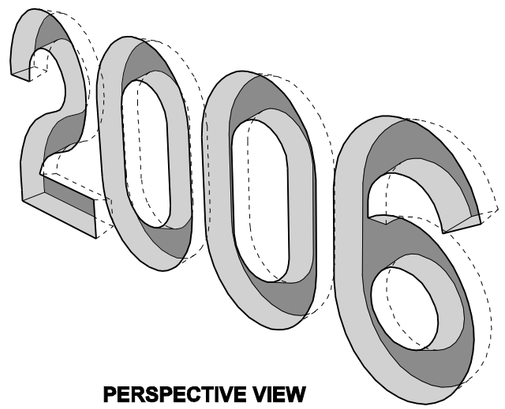

PERSPECTIVE VIEW

KEN LEROY SMITH
STATE OF WASHINGTON
31805
REGISTERED
PROFESSIONAL ENGINEER

EXPIRES AUGUST 26, 2007

NOTE: THIS PLAN IS NOT A LEGAL ENGINEERING DOCUMENT BUT AN ELECTRONIC DUPLICATE. THE ORIGINAL, SIGNED BY THE ENGINEER AND APPROVED FOR PUBLICATION, IS KEPT ON FILE AT THE WASHINGTON STATE DEPARTMENT OF TRANSPORTATION. A COPY MAY BE OBTAINED UPON REQUEST.

DATE NUMERAL PLACEMENT ON BRIDGE TRAFFIC BARRIER STANDARD PLAN E-1

SHEET 1 OF 1 SHEET

APPROVED FOR PUBLICATION

Ken L. Smith — *02-21-07*

STATE DESIGN ENGINEER — DATE

Washington State Department of Transportation

EFFECTIVE: APRIL 2, 2007 TO JANUARY 6, 2008

EFFECTIVE: APRIL 2, 2007 TO JANUARY 6, 2008

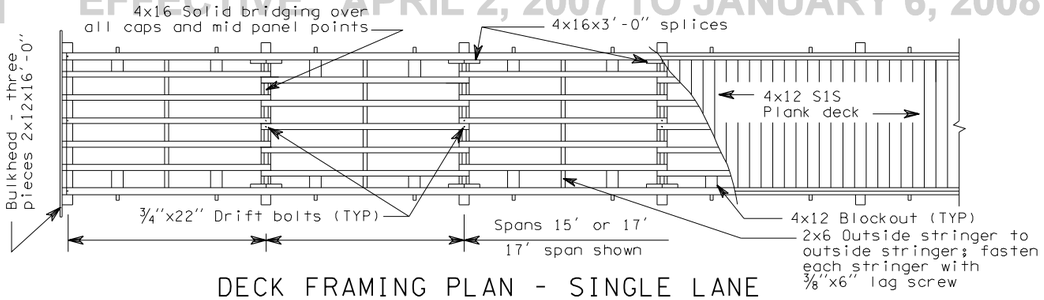

DECK FRAMING PLAN - SINGLE LANE

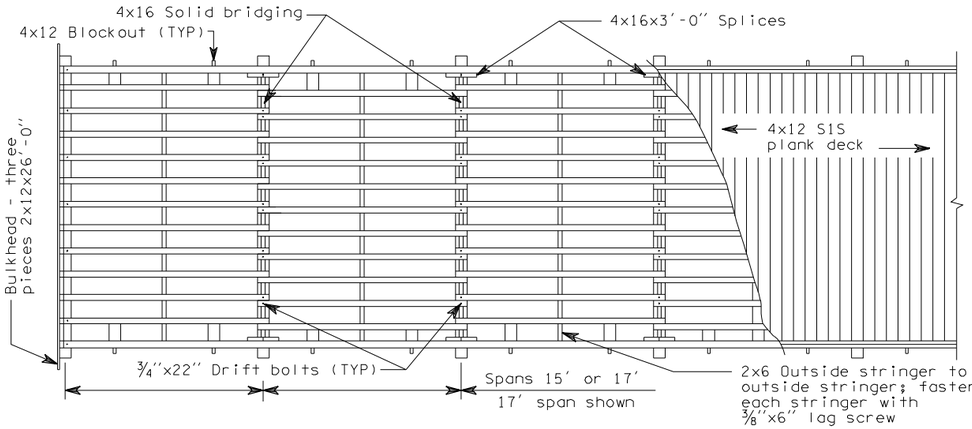

DECK FRAMING PLAN - TWO LANE

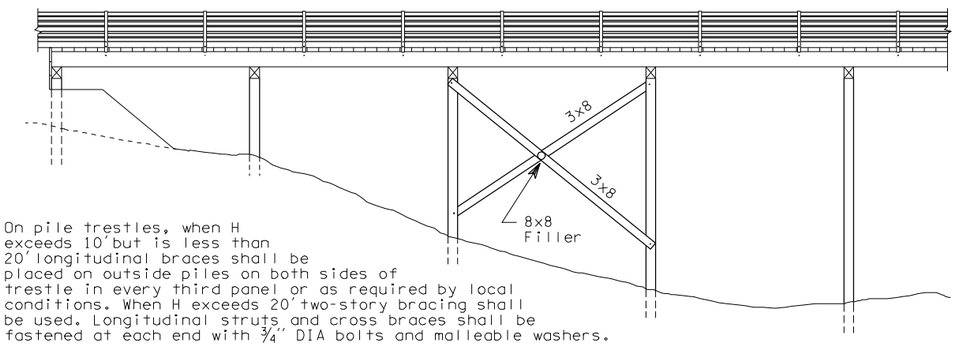

On pile trestles, when H exceeds 10' but is less than 20' longitudinal braces shall be placed on outside piles on both sides of trestle in every third panel or as required by local conditions. When H exceeds 20' two-story bracing shall be used. Longitudinal struts and cross braces shall be fastened at each end with ¾" DIA bolts and malleable washers.

ELEVATION - PILE TRESTLE

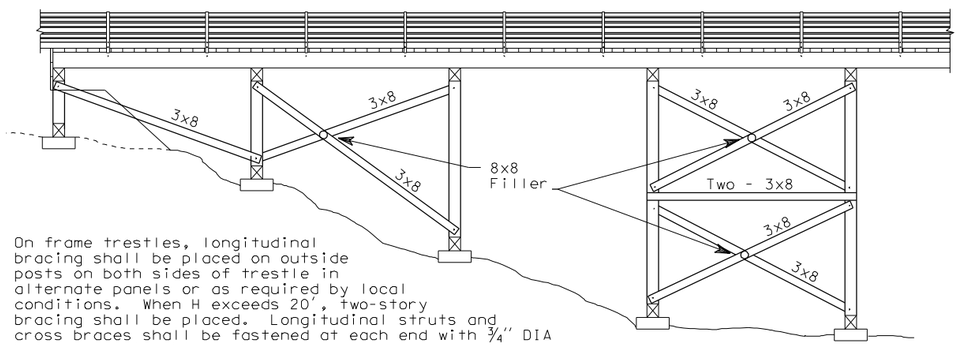

On frame trestles, longitudinal bracing shall be placed on outside posts on both sides of trestle in alternate panels or as required by local conditions. When H exceeds 20', two-story bracing shall be placed. Longitudinal struts and cross braces shall be fastened at each end with ¾" DIA bolts and malleable washers.

ELEVATION - FRAME TRESTLE

EFFECTIVE: APRIL 2, 2007 TO JANUARY 6, 2008

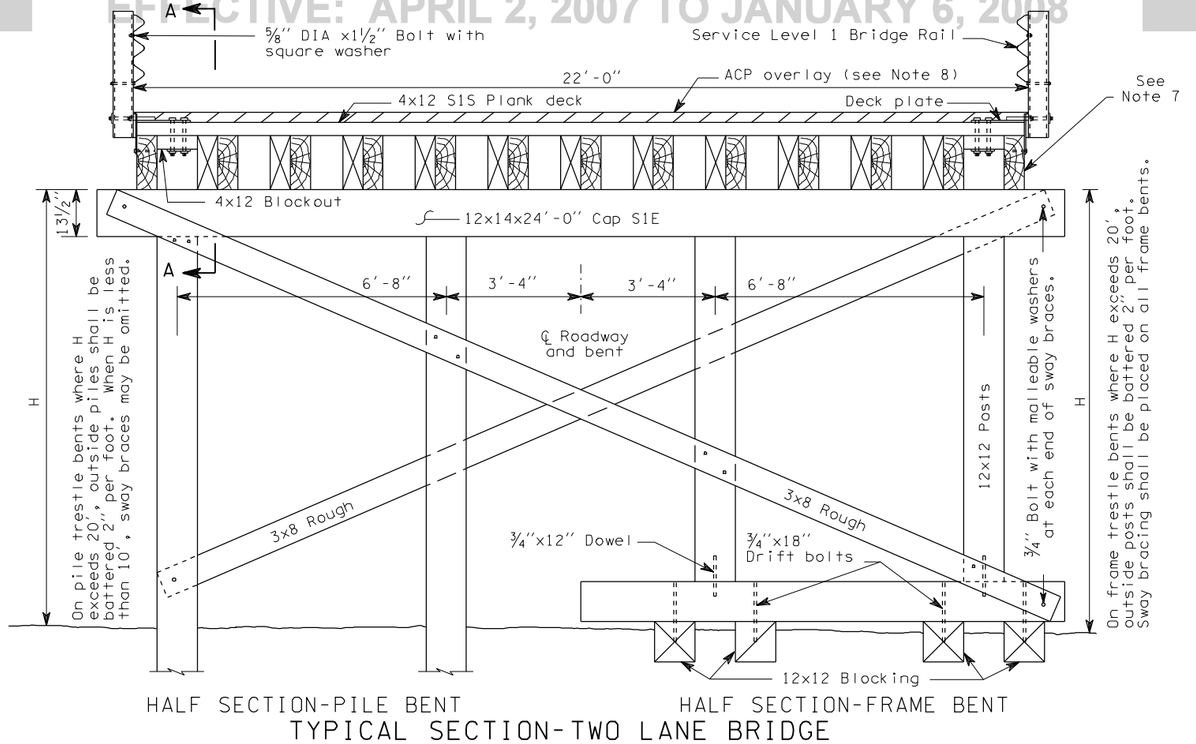

HALF SECTION-PILE BENT HALF SECTION-FRAME BENT

TYPICAL SECTION-TWO LANE BRIDGE

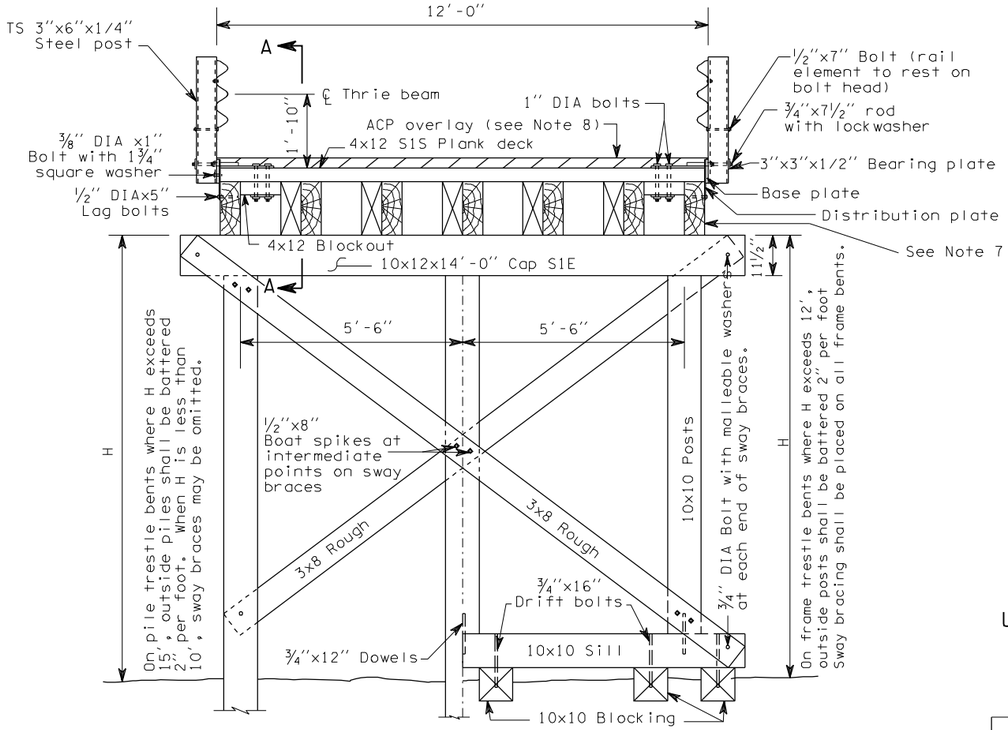

HALF SECTION-PILE BENT HALF SECTION-FRAME BENT

TYPICAL SECTION-SINGLE LANE BRIDGE

M. MYINT LWIN
STATE OF WASHINGTON
10536
REGISTERED
PROFESSIONAL ENGINEER

EXPIRES JANUARY 17, 1999

NOTE: THIS PLAN IS NOT A LEGAL ENGINEERING DOCUMENT BUT AN ELECTRONIC DUPLICATE. THE ORIGINAL, SIGNED BY THE ENGINEER AND APPROVED FOR PUBLICATION, IS KEPT ON FILE AT THE WASHINGTON STATE DEPARTMENT OF TRANSPORTATION. A COPY MAY BE OBTAINED UPON REQUEST.

PILE OR FRAME DETOUR BRIDGE WITH ASPHALT OVERLAY

USE ONLY FOR TEMPORARY BRIDGES

STANDARD PLAN E-2

SHEET 1 OF 2 SHEETS

APPROVED FOR PUBLICATION

Brian Ziegler 05-29-98

STATE DESIGN ENGINEER DATE

WASHINGTON STATE DEPARTMENT OF TRANSPORTATION
OLYMPIA, WASHINGTON

EFFECTIVE: APRIL 2, 2007 TO JANUARY 6, 2008

EFFECTIVE: APRIL 2, 2007 TO JANUARY 6, 2008

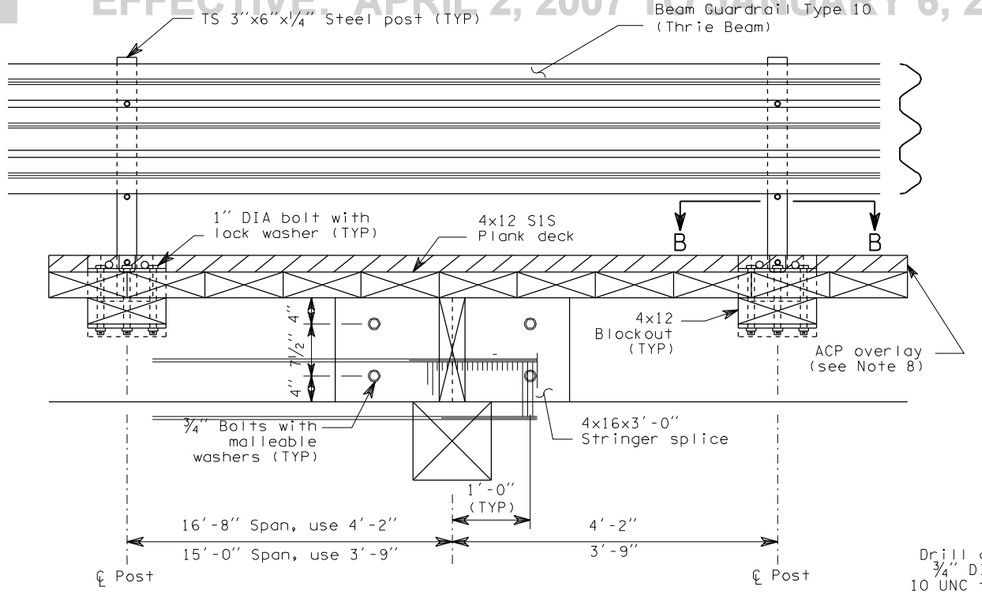

SECTION A-A

NOTES

1. Dimensions and notations for superstructure are typical for both single lane and two lane bridges.
2. All timber and lumber shall be #2 or better and untreated Douglas fir-larch.
3. All piling shall be untreated Douglas fir and shall be driven to develop a minimum load bearing capacity of 15 tons.
4. Blocking for frame bents shall be proportioned to carry a minimum load of 15 tons per post.
5. All hardware shall be black, ungalvanized.
6. Each deck plank shall be nailed to each stringer with two 7'' spikes, number 1 or larger.
7. On 17'spans, stringers shall be 6x16 S1E. On 15' spans, stringers shall be 5x16 S1E. Two-lane bridges shall use thirteen lines of stringers, one-lane bridges shall use seven lines of stringers.
8. Overlay thickness must be sufficient to cover bolts.

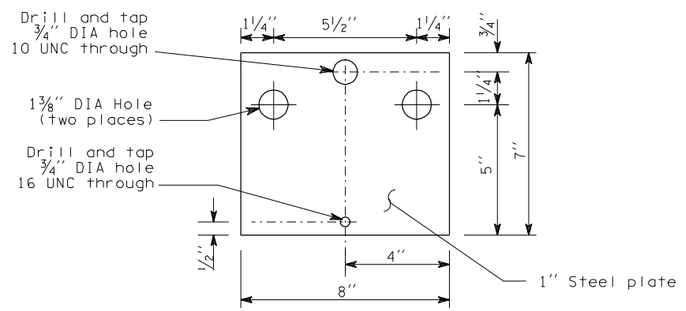

BASE PLATE DETAIL

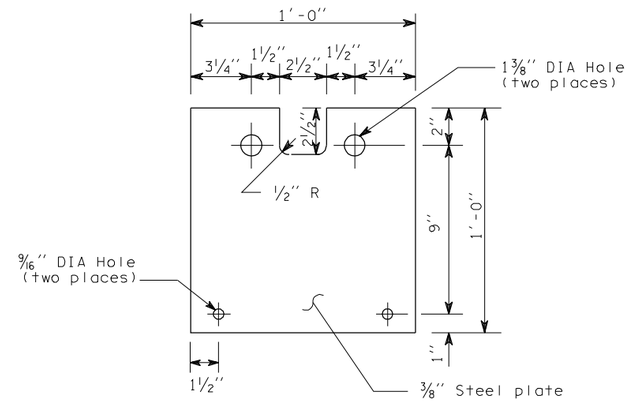

DISTRIBUTION PLATE DETAIL

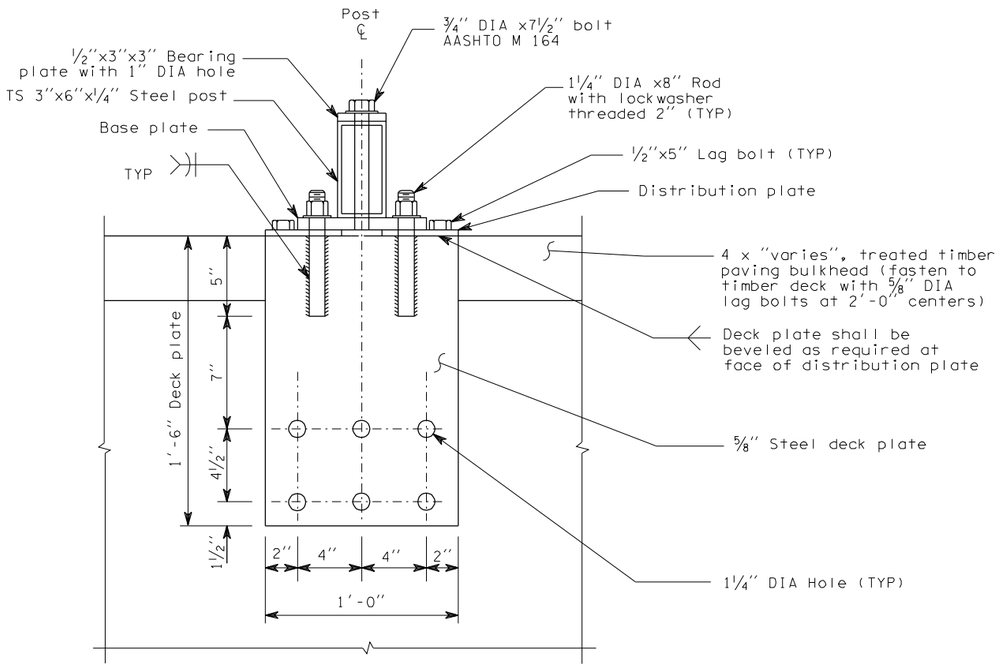

SECTION B-B

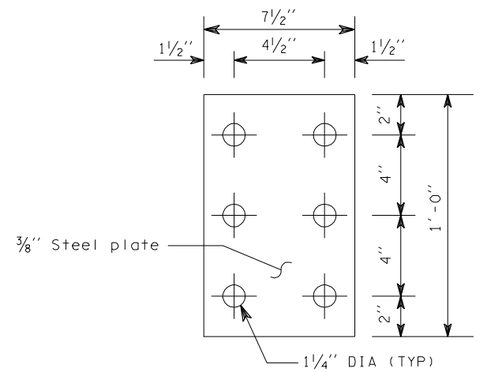

BACKING PLATE DETAIL

M. MYINT LWIN
STATE OF WASHINGTON
10536
REGISTERED
PROFESSIONAL ENGINEER
EXPIRES JANUARY 17, 1999

NOTE: THIS PLAN IS NOT A LEGAL ENGINEERING DOCUMENT BUT AN ELECTRONIC DUPLICATE. THE ORIGINAL, SIGNED BY THE ENGINEER AND APPROVED FOR PUBLICATION, IS KEPT ON FILE AT THE WASHINGTON STATE DEPARTMENT OF TRANSPORTATION. A COPY MAY BE OBTAINED UPON REQUEST.

PILE OR FRAME DETOUR BRIDGE WITH ASPHALT OVERLAY

USE ONLY FOR TEMPORARY BRIDGES

STANDARD PLAN E-2

SHEET 2 OF 2 SHEETS

APPROVED FOR PUBLICATION

Brian Ziegler — STATE DESIGN ENGINEER — *05-29-98* — DATE

WASHINGTON STATE DEPARTMENT OF TRANSPORTATION
OLYMPIA, WASHINGTON

EFFECTIVE: APRIL 2, 2007 TO JANUARY 6, 2008

EFFECTIVE: APRIL 2, 2007 TO JANUARY 6, 2008

DRAWN BY: MARK SUJKA

PILE TYPE	D (in.)	PERIMETER (in.)	UNIT WEIGHT (lbs./ft.)	AREA (in.²)	MOMENT OF INERTIA (in.⁴)	RADIUS OF GYRATION (in.)	NUMBER OF STRANDS	
							MINIMUM	MAXIMUM
SQUARE	12	48.0	158	144	1728	3.5	4	7
	14	56.0	215	196	3201	4.0	6	10
	16	64.0	281	256	5461	4.6	7	13
OCTAGONAL	14	46.4	178	162	2103	3.6	5	8
	16 1/2	54.7	247	226	4057	4.2	7	11
	18	59.6	295	268	5746	4.6	8	13
	20	66.3	364	331	8758	5.1	9	16
	24	79.5	524	477	18161	6.2	13	22

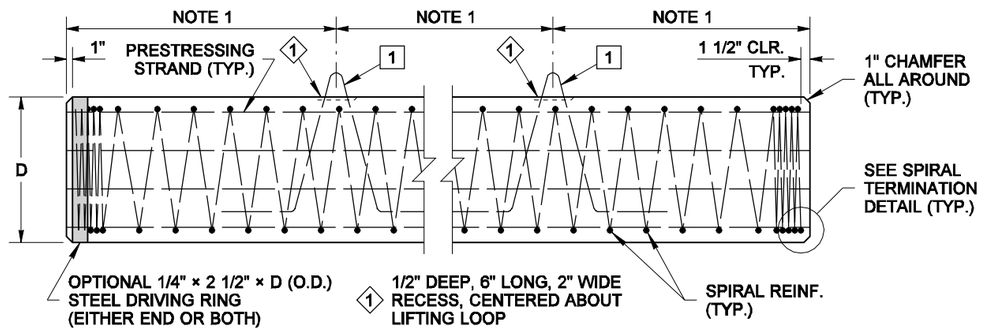

ELEVATION

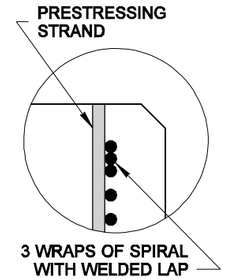

SPIRAL TERMINATION DETAIL

PILE DETAILS

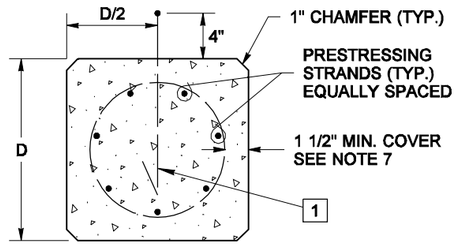

SQUARE

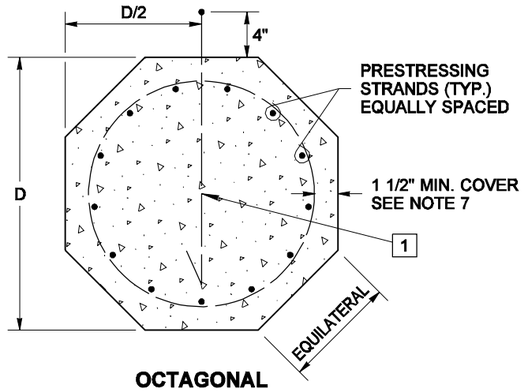

OCTAGONAL

TYPICAL SECTIONS

NOTES

1. Place lifting loops at the lifting points shown in the PILE HANDLING DIAGRAM, Standard Plan E-4a, for the case stated in the contract.
2. Spirals shall be spliced either by lapping one full turn and bending the end of the spiral to a 135° seismic hook, by welding, or by the use of a mechanical connector that develops 125% of the minimum yield strenth of the spiral. Welding shall meet the requirements of Standard Specification 6-02.3(24)E.
3. All prestressing strands are 1/2" or 0.6" diameter (d_{ps}), Grade 270, uncoated strands, AASHTO M203, jack to 0.75 Fpu maximum.
4. Strength of concrete shall be 5.0 ksi at release and 7.0 ksi at final.
5. 2 1/2" cover if pile is exposed to salt water.

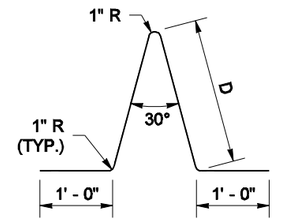

BENDING DIAGRAM

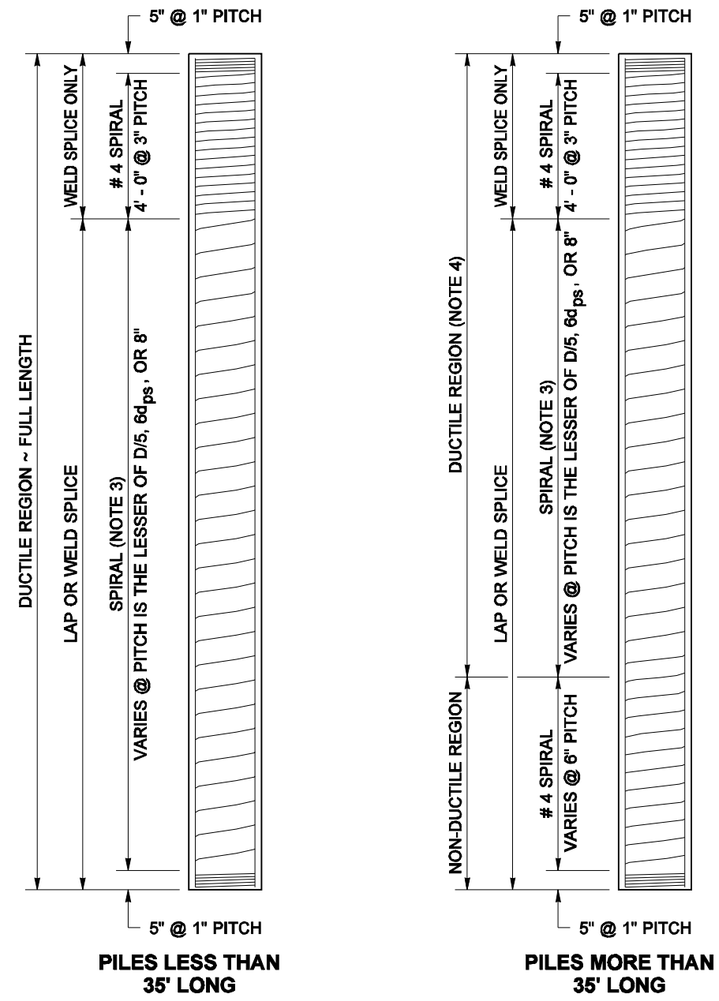

SPIRAL REINFORCEMENT

DEFORMED BAR AASHTO M 31 GR. 60	PLAIN STEEL BAR AASHTO M 31 GR. 60	COLD DRAWN WIRE AASHTO M 32	DEFORMED WIRE AASHTO M225	WELD DIMENSIONS		
				S	E	LENGTH (L)
# 4	1/2" DIAM.	W 20	D 20	6	3	4"
# 5	5/8" DIAM.	W 31	D 31	8	5	6"

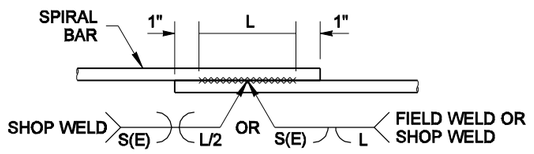

SEE TABLE FOR WELD DIMENSIONS

SPIRAL WELDED LAP SPLICE DETAIL

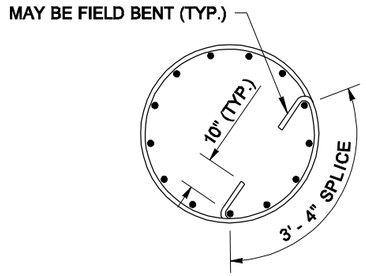

SPIRAL LAP SPLICE DETAIL

BIJAN KHALEGHI
STATE OF WASHINGTON
27695
REGISTERED
PROFESSIONAL ENGINEER

EXPIRES AUGUST 23, 2004

NOTE: THIS PLAN IS NOT A LEGAL ENGINEERING DOCUMENT BUT AN ELECTRONIC DUPLICATE. THE ORIGINAL, SIGNED BY THE ENGINEER AND APPROVED FOR PUBLICATION, IS KEPT ON FILE AT THE WASHINGTON STATE DEPARTMENT OF TRANSPORTATION. A COPY MAY BE OBTAINED UPON REQUEST.

PRECAST PRESTRESSED CONCRETE PILES

STANDARD PLAN E-4

SHEET 1 OF 1 SHEET

APPROVED FOR PUBLICATION

Harold J. Peterfeso — STATE DESIGN ENGINEER — *08-27-03* — DATE

Washington State Department of Transportation

EFFECTIVE: APRIL 2, 2007 TO JANUARY 6, 2008

EFFECTIVE: APRIL 2, 2007 TO JANUARY 6, 2008

DRAWN BY: MARK SUJKA

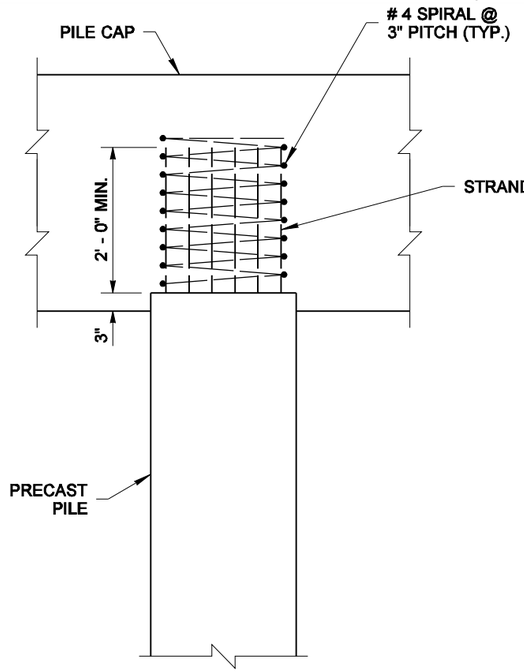

PILE CUTOFF WITH STRANDS EXTENDING 2' - 0" MINIMUM

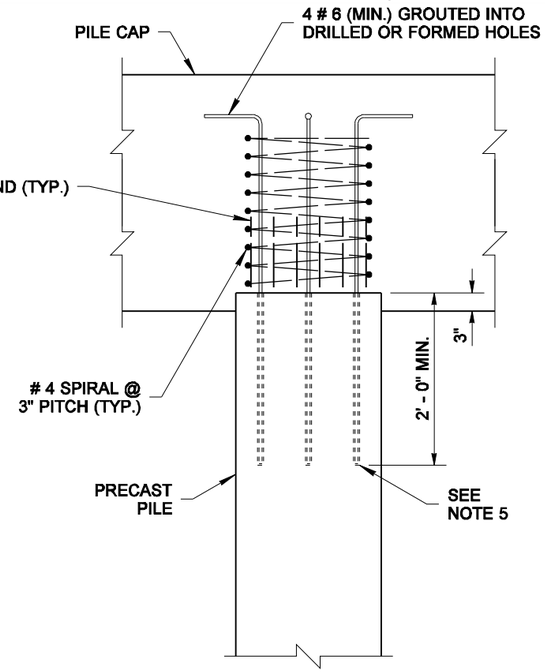

PILE CUTOFF WITH STRANDS EXTENDING LESS THAN 2' - 0"

PILE TO PILE-CAP CONNECTIONS

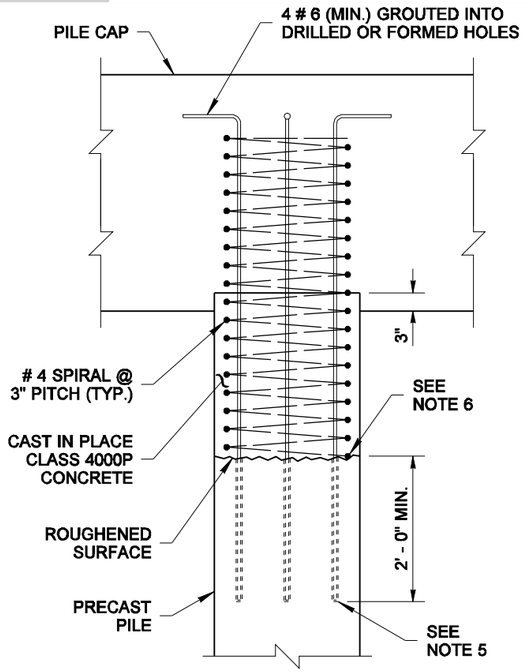

BUILD-UP ON PILE DRIVEN BELOW CUTOFF

PRECAST PILES, HANDLING NOTES

1. For pile lifting Cases 1 and 2, do not allow pile tip to bear on other piling stored in a lower layer.
2. For pile lifting Cases 3 and 4, tilt the pile in the air, do not allow the pile to touch the ground.
3. The minimum angle between the pile and the lifting strap is 60° when the pile is in the horizontal position.
4. When directed to remove a lifting loop, cut it off at the bottom of the recess and patch the recess by filling it with 1:2 mortar, finishing it to the level of the pile face. The patch shall be allowed to cure at least 24 hours prior to driving the pile.
5. The length of the formed or drilled hole shall allow for potential cut-off and full development length of the steel reinforcement. The holes must be roughened and filled with epoxy resin.
6. Expose the spiral reinforcement at the pile head and splice with new spiral in accordance with Standard Plan E-4, Note 2.
7. For handling and bunking, the Prestressed piles shall have at least the minimum number of strands shown on Std Plan E4.
8. Piles stored on the ground should be bunked on level dunnage at no more than 20' on center, with a maximum overhang of 10'.

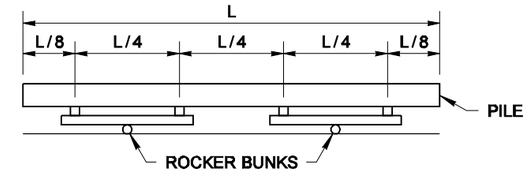

"L" IS MORE THAN 90'

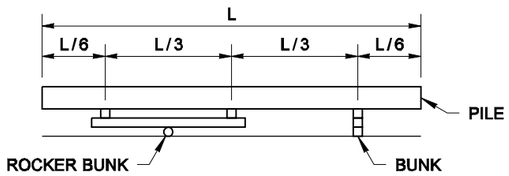

"L" IS MORE THAN 70' BUT NOT MORE THAN 90'

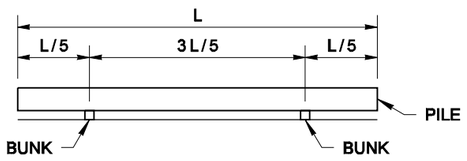

"L" IS 70' OR LESS

PILE BUNKING AND SHIPPING SUPPORT DIAGRAMS

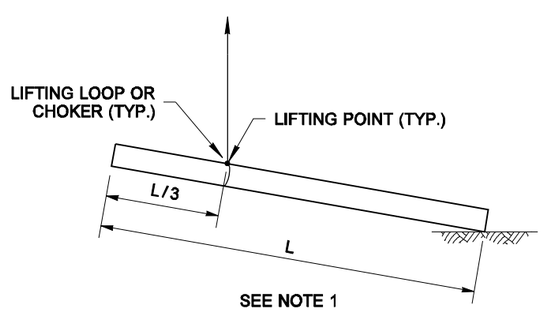

WHEN "L" IS 50' OR LESS
CASE 1

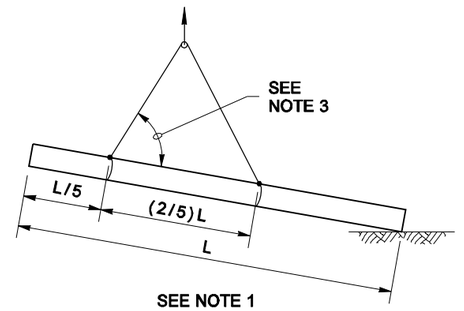

WHEN "L" IS MORE THAN 50' BUT NOT MORE THAN 70'
CASE 2

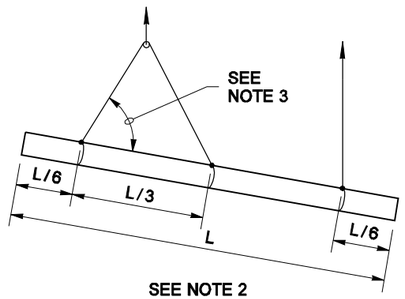

WHEN "L" IS MORE THAN 70' BUT NOT MORE THAN 90'
CASE 3

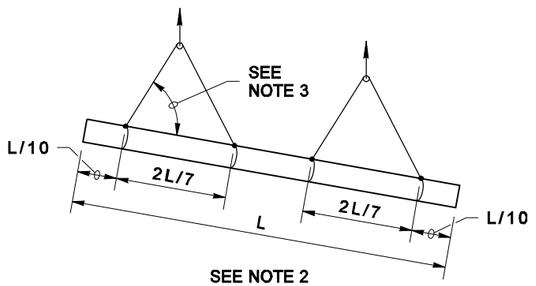

WHEN "L" IS MORE THAN 90'
CASE 4

PILE HANDLING DIAGRAMS

BIJAN KHALEGHI
STATE OF WASHINGTON
27695
REGISTERED
PROFESSIONAL ENGINEER

EXPIRES AUGUST 23, 2004

NOTE: THIS PLAN IS NOT A LEGAL ENGINEERING DOCUMENT BUT AN ELECTRONIC DUPLICATE. THE ORIGINAL, SIGNED BY THE ENGINEER AND APPROVED FOR PUBLICATION, IS KEPT ON FILE AT THE WASHINGTON STATE DEPARTMENT OF TRANSPORTATION. A COPY MAY BE OBTAINED UPON REQUEST.

PRECAST PRESTRESSED CONCRETE PILES HANDLING AND CAPPING

STANDARD PLAN E-4a

SHEET 1 OF 1 SHEET

APPROVED FOR PUBLICATION

Harold J. Peterfeso — STATE DESIGN ENGINEER — *08-27-03* — DATE

Washington State Department of Transportation

EFFECTIVE: APRIL 2, 2007 TO JANUARY 6, 2008

EFFECTIVE: APRIL 2, 2007 TO JANUARY 6, 2008

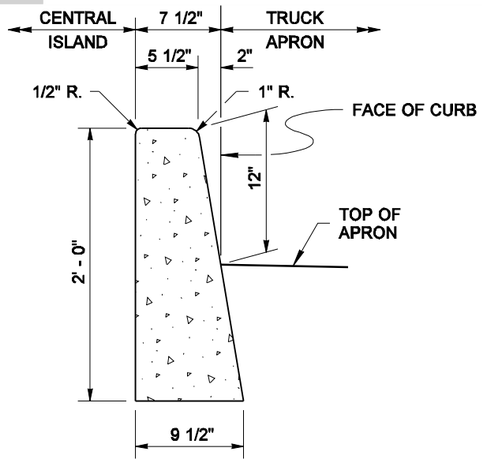

ROUNDABOUT CENTRAL ISLAND CEMENT CONCRETE CURB

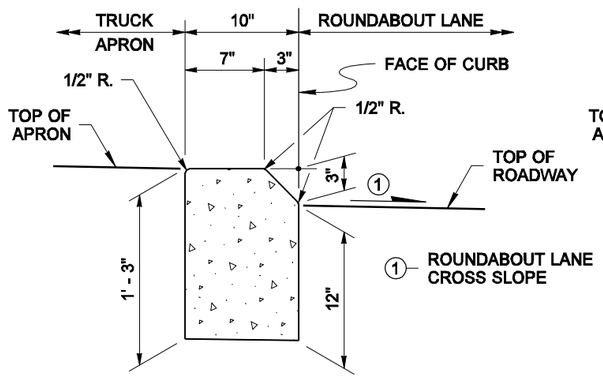

ROUNDABOUT TRUCK APRON CEMENT CONCRETE CURB

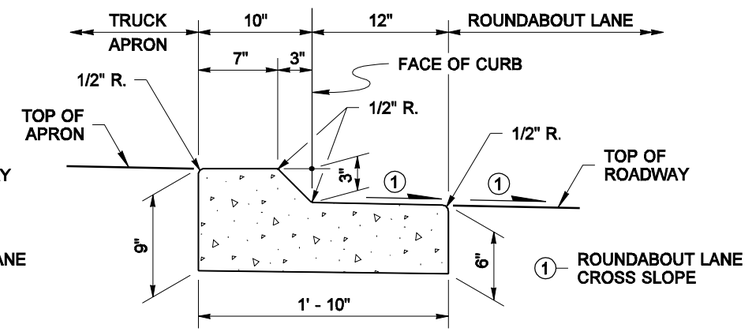

ROUNDABOUT TRUCK APRON CEMENT CONCRETE CURB AND GUTTER

GENERAL NOTE

See Standard Plan F-3 for Curb Expansion and Contraction Joint spacing.

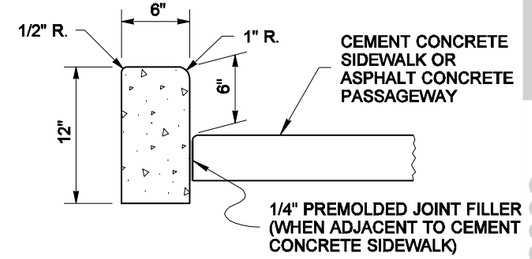

CEMENT CONCRETE PEDESTRIAN CURB

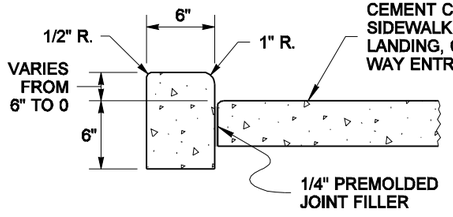

CEMENT CONCRETE PEDESTRIAN CURB
AT SIDEWALK RAMPS & LANDINGS, AND DRIVEWAY ENTRANCES

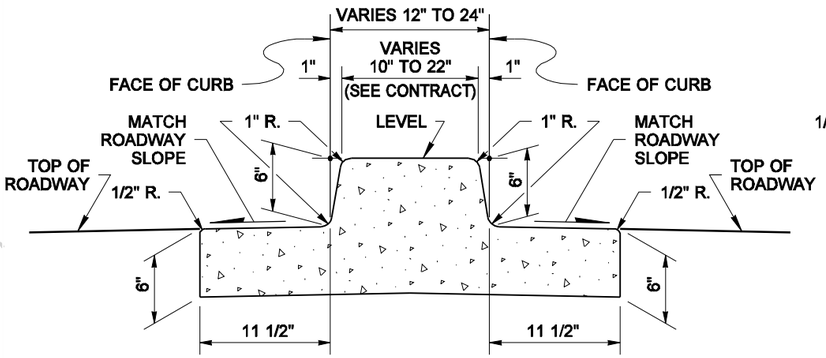

DUAL-FACED CEMENT CONCRETE TRAFFIC CURB AND GUTTER

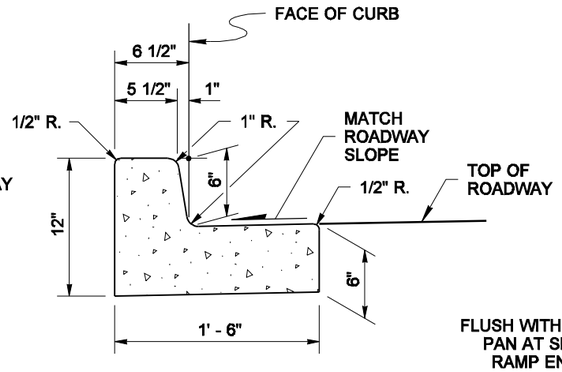

CEMENT CONCRETE TRAFFIC CURB AND GUTTER

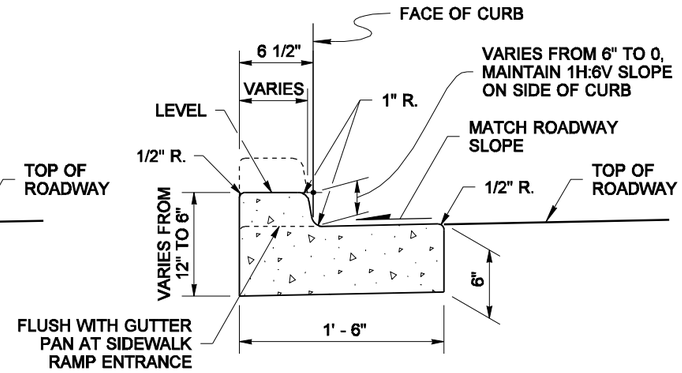

DEPRESSED CURB SECTION
AT SIDEWALK RAMPS AND DRIVEWAY ENTRANCES

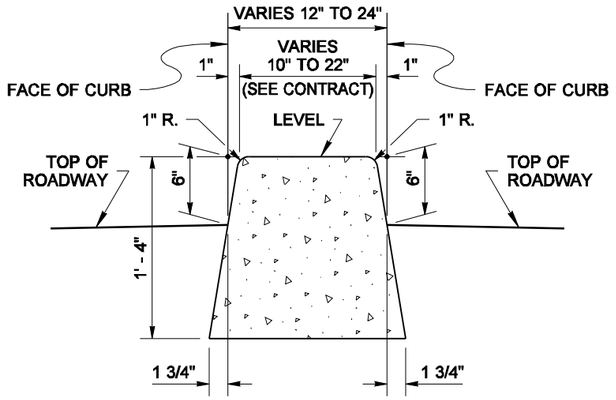

DUAL-FACED CEMENT CONCRETE TRAFFIC CURB

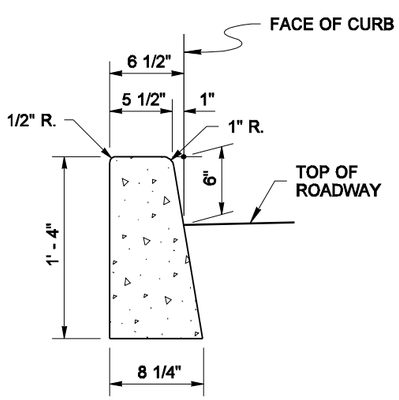

CEMENT CONCRETE TRAFFIC CURB

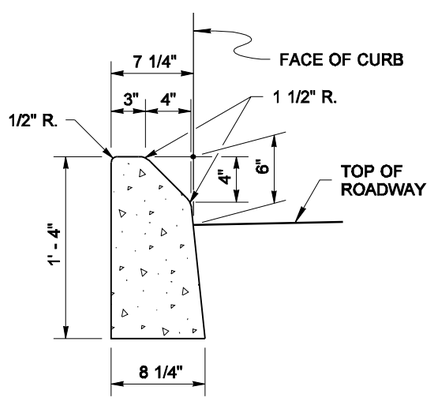

MOUNTABLE CEMENT CONCRETE TRAFFIC CURB



EXPIRES JULY 27, 2007

NOTE: THIS PLAN IS NOT A LEGAL ENGINEERING DOCUMENT BUT AN ELECTRONIC DUPLICATE. THE ORIGINAL, SIGNED BY THE ENGINEER AND APPROVED FOR PUBLICATION, IS KEPT ON FILE AT THE WASHINGTON STATE DEPARTMENT OF TRANSPORTATION. A COPY MAY BE OBTAINED UPON REQUEST.

CEMENT CONCRETE CURBS

STANDARD PLAN F-10.12-00

SHEET 1 OF 1 SHEET

APPROVED FOR PUBLICATION

Kevin J. Dayton — STATE DESIGN ENGINEER — *12-20-06* — DATE

Washington State Department of Transportation

DRAWN BY: MARK SUJKA

EFFECTIVE: APRIL 2, 2007 TO JANUARY 6, 2008

EFFECTIVE: APRIL 2, 2007 TO JANUARY 6, 2008

DRAWN BY: MARK SUJKA

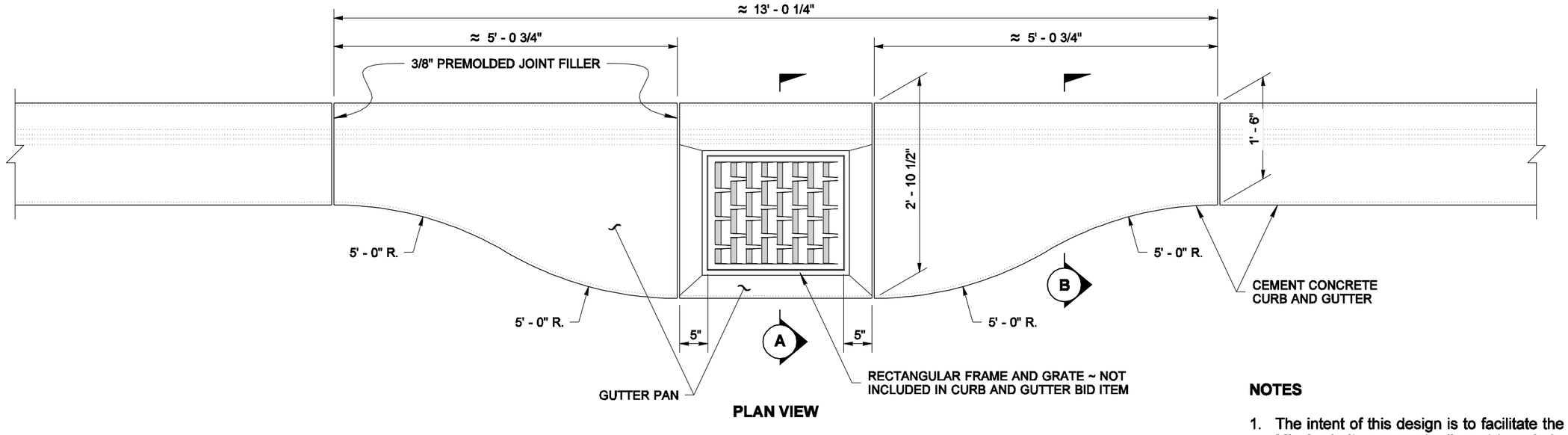

PLAN VIEW

CATCH BASIN GUTTER PAN

NOTES

1. The intent of this design is to facilitate the compaction of Hot Mix Asphalt pavement adjacent to a drainage structure.
2. The centerline of the drainage structure may differ from the centerline of the frame and grate.

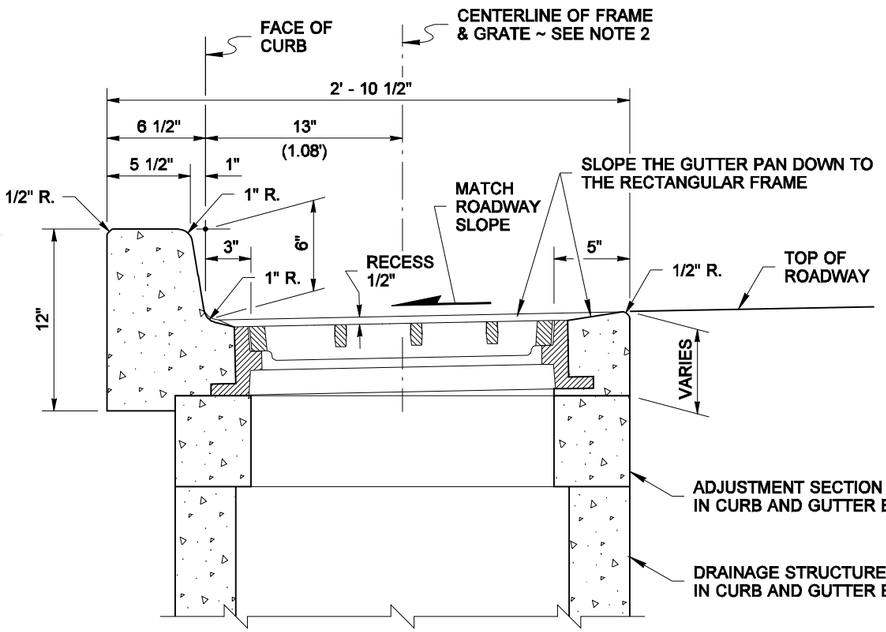

SECTION (A)

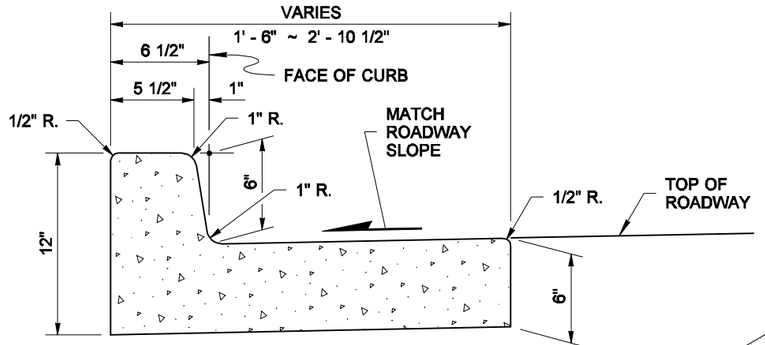

SECTION (B)

ISOMETRIC VIEW

EXPIRES JULY 27, 2007

NOTE: THIS PLAN IS NOT A LEGAL ENGINEERING DOCUMENT BUT AN ELECTRONIC DUPLICATE. THE ORIGINAL, SIGNED BY THE ENGINEER AND APPROVED FOR PUBLICATION, IS KEPT ON FILE AT THE WASHINGTON STATE DEPARTMENT OF TRANSPORTATION. A COPY MAY BE OBTAINED UPON REQUEST.

CEMENT CONCRETE CURB AND GUTTER PAN

STANDARD PLAN F-10.16-00

SHEET 1 OF 1 SHEET

APPROVED FOR PUBLICATION

Kevin J. Dayton — *12-20-06*

STATE DESIGN ENGINEER — DATE

Washington State Department of Transportation

EFFECTIVE: APRIL 2, 2007 TO JANUARY 6, 2008

EFFECTIVE: APRIL 2, 2007 TO JANUARY 6, 2008

DRAWN BY: BILL BERENS

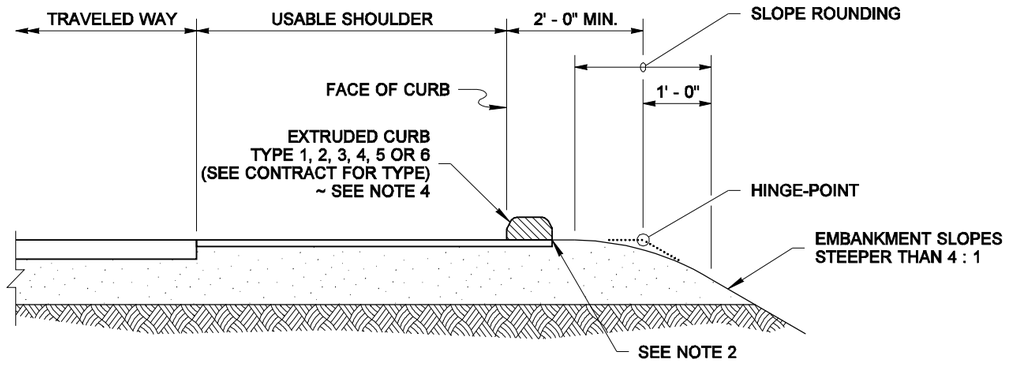

EXTRUDED CURB WITH SLOPE ROUNDING

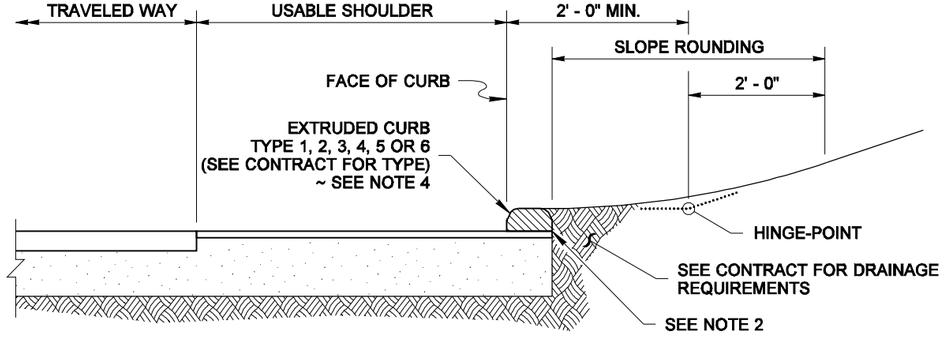

EXTRUDED CURB AT CUT SLOPE

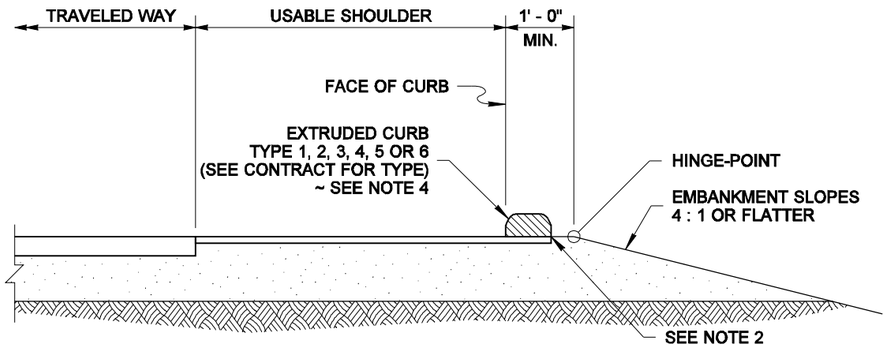

EXTRUDED CURB WITHOUT SLOPE ROUNDING

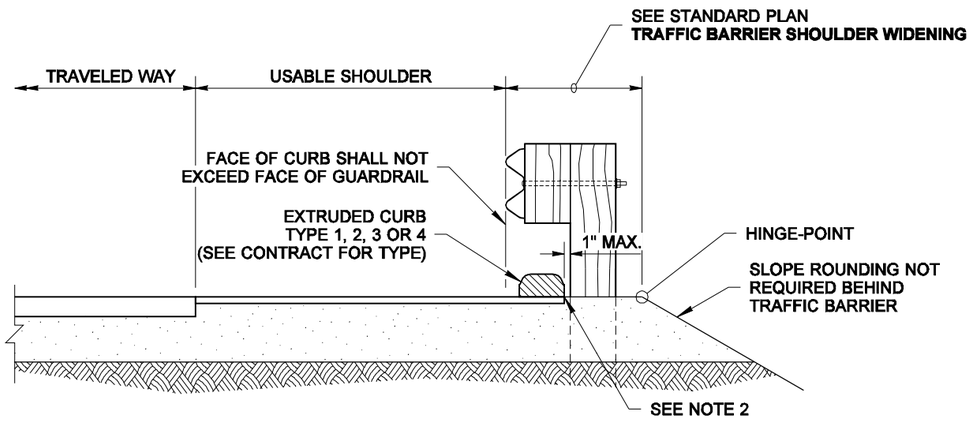

EXTRUDED CURB AT BEAM GUARDRAIL TYPE 1

NOTES

1. The installation of curb in areas with existing guardrail could require the removal and resetting of the guardrail or its components.
2. Extend shoulder pavement to provide a base for the extruded curb.
3. See Contract for exception to distances shown.
4. Type 3 and 6 curbs are not used on roadways with a posted speed greater than 40 mph.

KEN LEROY SMITH
STATE OF WASHINGTON
31805
REGISTERED
PROFESSIONAL ENGINEER

EXPIRES AUGUST 26, 2007

NOTE: THIS PLAN IS NOT A LEGAL ENGINEERING DOCUMENT BUT AN ELECTRONIC DUPLICATE. THE ORIGINAL, SIGNED BY THE ENGINEER AND APPROVED FOR PUBLICATION, IS KEPT ON FILE AT THE WASHINGTON STATE DEPARTMENT OF TRANSPORTATION. A COPY MAY BE OBTAINED UPON REQUEST.

EXTRUDED CURB PLACEMENT

STANDARD PLAN F-10.40-00

SHEET 1 OF 1 SHEET

APPROVED FOR PUBLICATION

Ken L. Smith — STATE DESIGN ENGINEER

01-23-07 — DATE

Washington State Department of Transportation

EFFECTIVE: APRIL 2, 2007 TO JANUARY 6, 2008

EFFECTIVE: APRIL 2, 2007 TO JANUARY 6, 2008

EFFECTIVE: APRIL 2, 2007 TO JANUARY 6, 2008

DRAWN BY: BILL BERENS

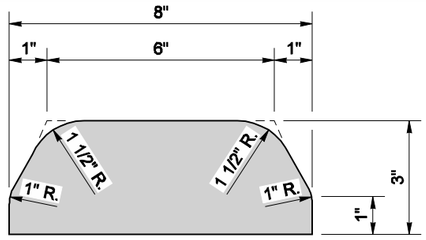

TYPE 1
(HOT MIX ASPHALT)

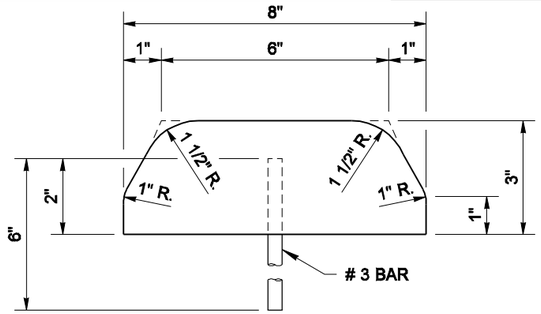

TYPE 4
(CEMENT CONCRETE)

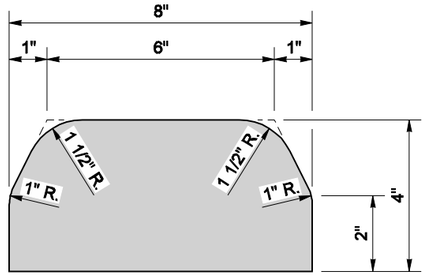

TYPE 2
(HOT MIX ASPHALT)

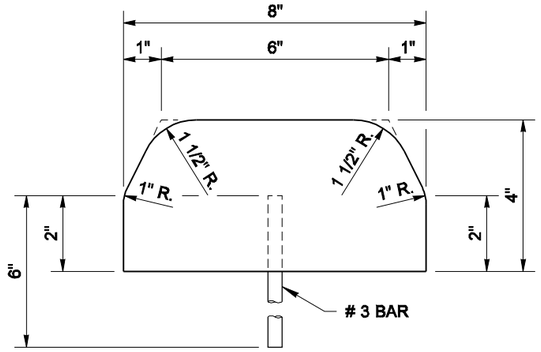

TYPE 5
(CEMENT CONCRETE)

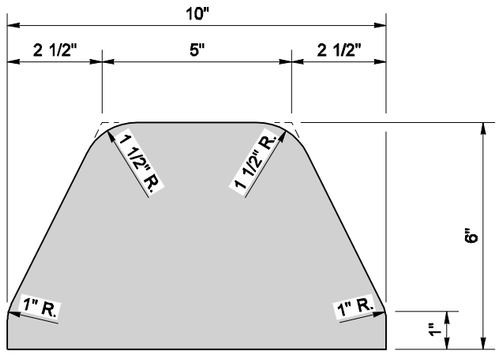

TYPE 3
(HOT MIX ASPHALT)

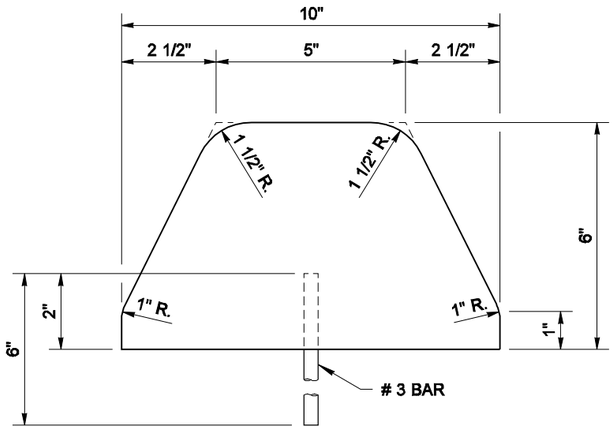

TYPE 6
(CEMENT CONCRETE)

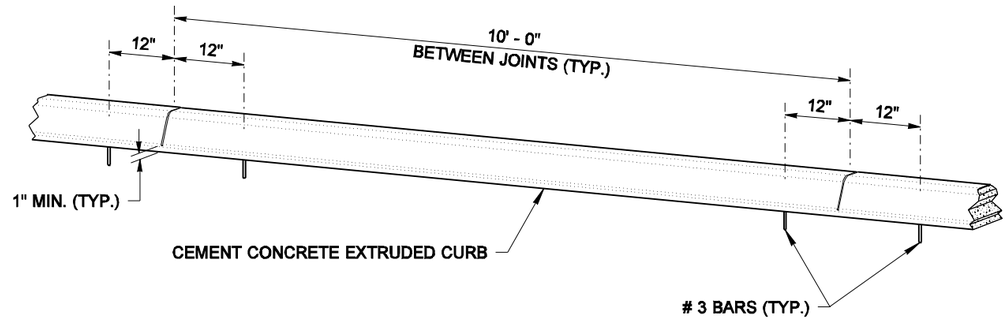

SPACING OF ANCHOR BARS
(FOR TYPES 4, 5, AND 6)

NOTE

JOINTS MAY BE FORMED DURING INSTALLATION USING A RIGID DIVIDER OR SAWCUT AFTER CONCRETE CURES TO MINIMUM STRENGTH.

KEN LEROY SMITH
STATE OF WASHINGTON
31805
REGISTERED
PROFESSIONAL ENGINEER

EXPIRES AUGUST 26, 2007

NOTE: THIS PLAN IS NOT A LEGAL ENGINEERING DOCUMENT BUT AN ELECTRONIC DUPLICATE. THE ORIGINAL, SIGNED BY THE ENGINEER AND APPROVED FOR PUBLICATION, IS KEPT ON FILE AT THE WASHINGTON STATE DEPARTMENT OF TRANSPORTATION. A COPY MAY BE OBTAINED UPON REQUEST.

EXTRUDED CURB

STANDARD PLAN F-10.42-00

SHEET 1 OF 1 SHEET

APPROVED FOR PUBLICATION

Ken L. Smith — STATE DESIGN ENGINEER
01-23-07 — DATE

Washington State Department of Transportation

EFFECTIVE: APRIL 2, 2007 TO JANUARY 6, 2008

EFFECTIVE: APRIL 2, 2007 TO JANUARY 6, 2008

EFFECTIVE: APRIL 2, 2007 TO JANUARY 6, 2008

DRAWN BY: BILL BERENS

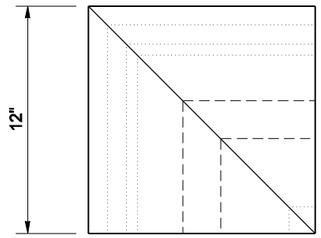

TOP VIEW

INSIDE CORNER BLOCK

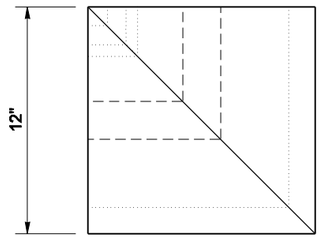

TOP VIEW

OUTSIDE CORNER BLOCK

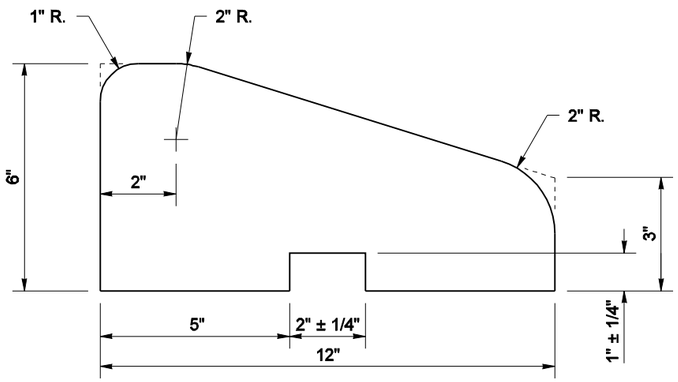

TYPICAL OF ALL

END VIEW

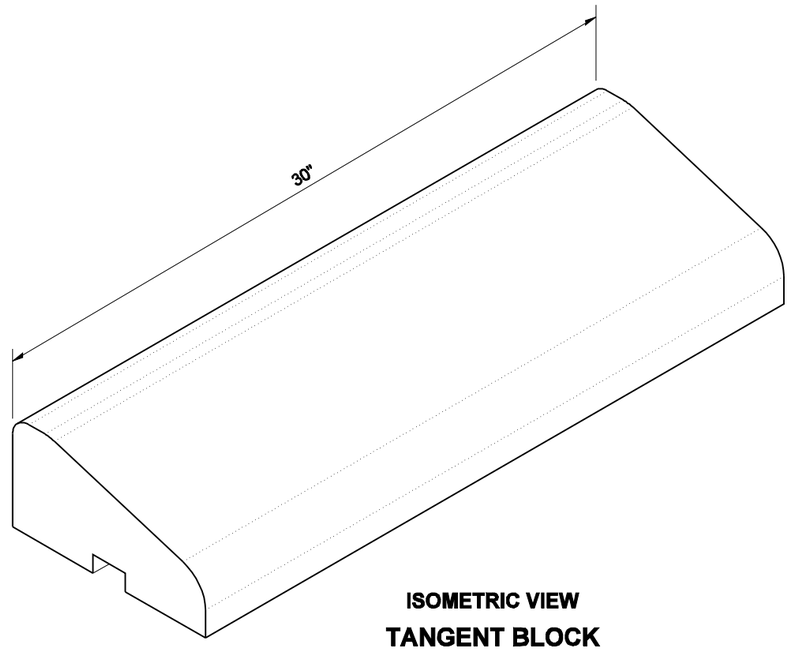

ISOMETRIC VIEW

TANGENT BLOCK

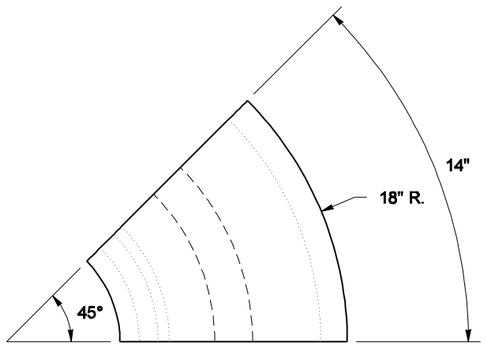

TOP VIEW

18" RADIUS BLOCK

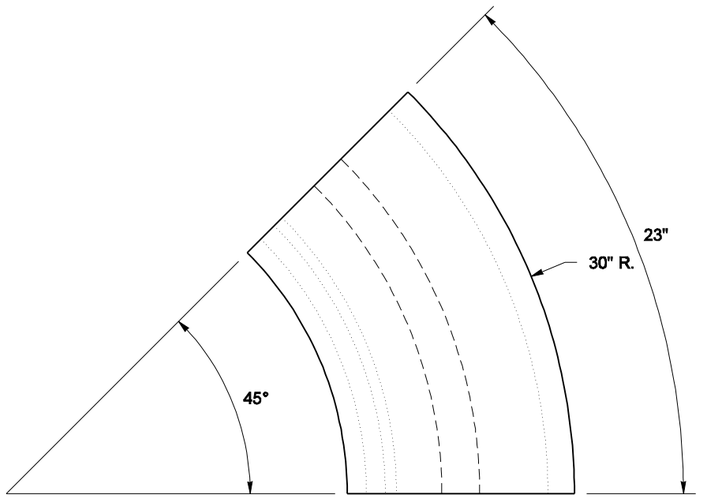

TOP VIEW

30" RADIUS BLOCK

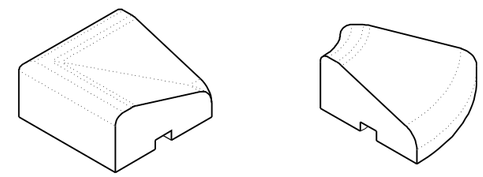

INSIDE CORNER BLOCK

18" RADIUS BLOCK

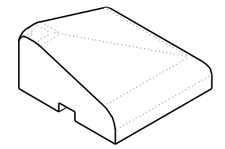

OUTSIDE CORNER BLOCK

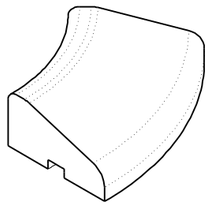

30" RADIUS BLOCK

ISOMETRIC VIEWS



EXPIRES AUGUST 26, 2007

NOTE: THIS PLAN IS NOT A LEGAL ENGINEERING DOCUMENT BUT AN ELECTRONIC DUPLICATE. THE ORIGINAL, SIGNED BY THE ENGINEER AND APPROVED FOR PUBLICATION, IS KEPT ON FILE AT THE WASHINGTON STATE DEPARTMENT OF TRANSPORTATION. A COPY MAY BE OBTAINED UPON REQUEST.

PRECAST CONCRETE SLOPED MOUNTABLE CURB

STANDARD PLAN F-10.62-00

SHEET 1 OF 2 SHEET

APPROVED FOR PUBLICATION

Ken L. Smith — STATE DESIGN ENGINEER

01-23-07 — DATE

Washington State Department of Transportation

EFFECTIVE: APRIL 2, 2007 TO JANUARY 6, 2008

EFFECTIVE: APRIL 2, 2007 TO JANUARY 6, 2008
EFFECTIVE: APRIL 2, 2007 TO JANUARY 6, 2008

DRAWN BY: BILL BERENS

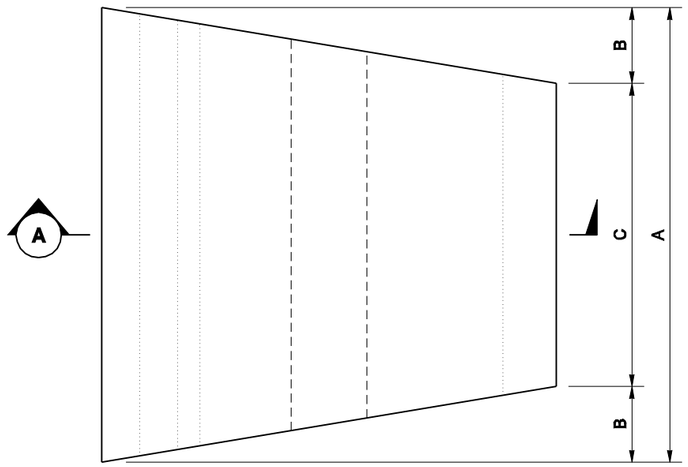

TOP VIEW

INSIDE RADIUS BLOCK

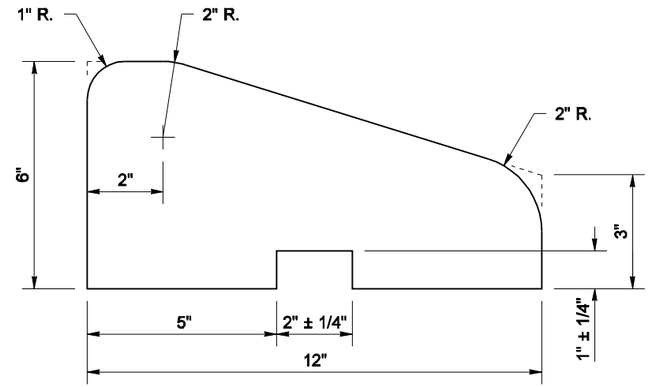

SECTION (A)

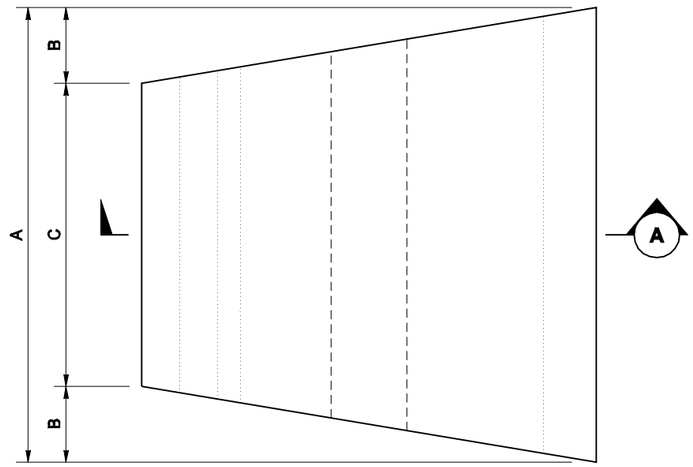

TOP VIEW

OUTSIDE RADIUS BLOCK

CURB RADIUS TABLE

CURB RADIUS	DIMENSION A	DIMENSION B	DIMENSION C
3'	12"	2"	8"
4' TO 5'	12"	1 1/2"	9"
6'	12"	1"	10"
7'	12"	7/8"	10 1/4"
8'	18"	1 1/8"	15 3/4"
9'	18"	1"	16"
10'	18"	7/8"	16 1/4"
11' TO 13'	18"	3/4"	16 1/2"
14' TO 15'	18"	5/8"	16 3/4"
16' TO 17'	24"	3/4"	22 1/2"
18' TO 22'	24"	5/8"	22 3/4"
23' TO 29'	24"	1/2"	23"
30' TO 34'	30"	1/2"	29"
35' TO 48'	30"	3/8"	29 1/4"
49' TO 60'	30"	1/4"	29 1/2"
OVER 60'	USE TANGENT BLOCK, SEE SHEET 1		

THIS TABLE LISTS THE CALCULATED DIMENSIONS FOR CASTING BLOCKS SUITABLE FOR CONSTRUCTING VARIOUS CURB RADII. CURVED BLOCKS, OR BLOCKS WITH DIFFERENT DIMENSIONS MAY BE ACCEPTABLE WITH PRIOR APPROVAL OF THE ENGINEER.

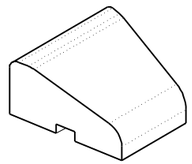

INSIDE RADIUS BLOCK

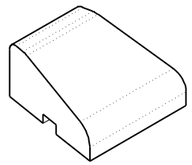

OUTSIDE RADIUS BLOCK

ISOMETRIC VIEWS

KEN LEROY SMITH
STATE OF WASHINGTON
31805
REGISTERED
PROFESSIONAL ENGINEER

EXPIRES AUGUST 26, 2007

NOTE: THIS PLAN IS NOT A LEGAL ENGINEERING DOCUMENT BUT AN ELECTRONIC DUPLICATE. THE ORIGINAL, SIGNED BY THE ENGINEER AND APPROVED FOR PUBLICATION, IS KEPT ON FILE AT THE WASHINGTON STATE DEPARTMENT OF TRANSPORTATION. A COPY MAY BE OBTAINED UPON REQUEST.

PRECAST CONCRETE SLOPED MOUNTABLE CURB

STANDARD PLAN F-10.62-00

SHEET 2 OF 2 SHEETS

APPROVED FOR PUBLICATION

Ken L. Smith — STATE DESIGN ENGINEER

01-23-07 — DATE

Washington State Department of Transportation

EFFECTIVE: APRIL 2, 2007 TO JANUARY 6, 2008
EFFECTIVE: APRIL 2, 2007 TO JANUARY 6, 2008

EFFECTIVE: APRIL 2, 2007 TO JANUARY 6, 2008

DRAWN BY: BILL BERENS

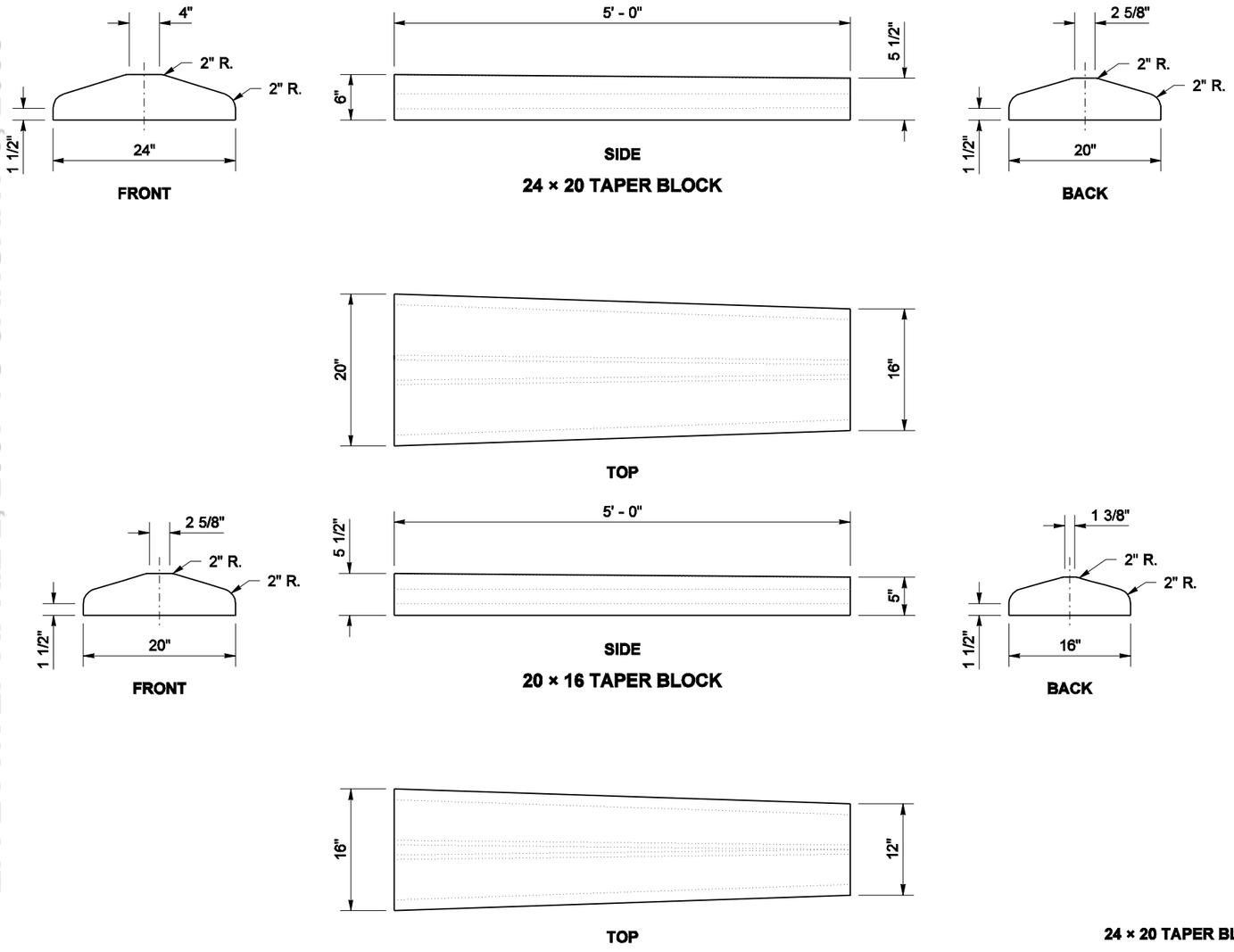

EFFECTIVE: APRIL 2, 2007 TO JANUARY 6, 2008

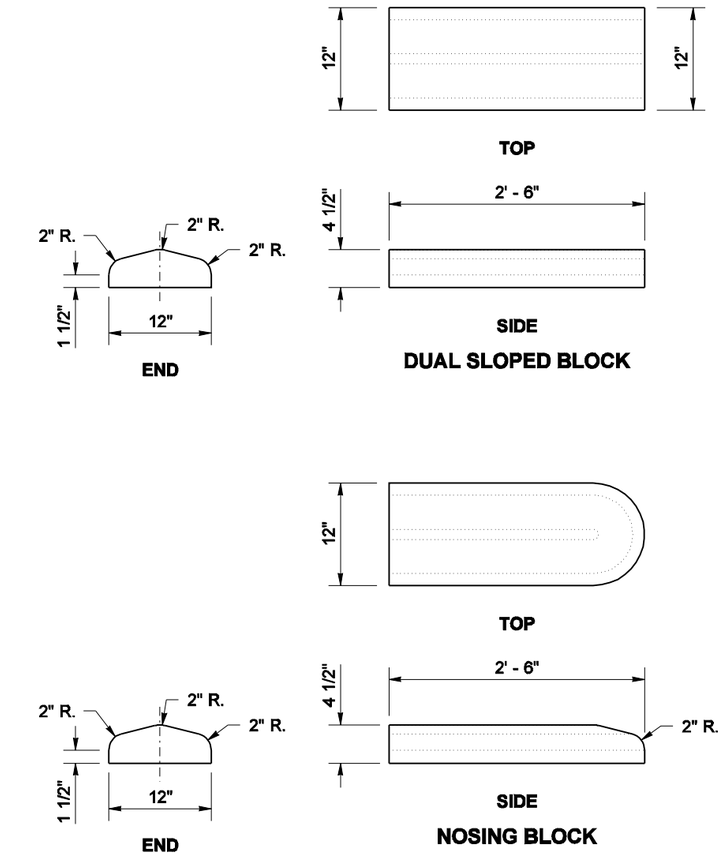

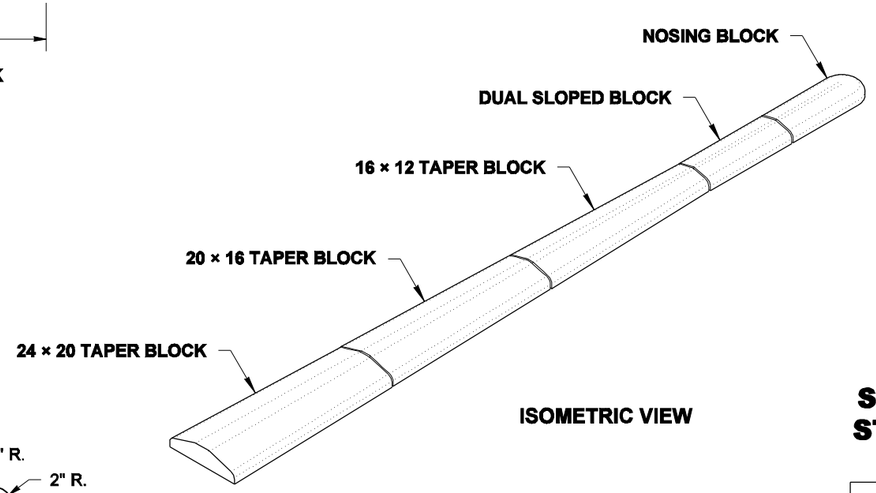

ISOMETRIC VIEW

KEN LEROY SMITH
STATE OF WASHINGTON
31805
REGISTERED
PROFESSIONAL ENGINEER

EXPIRES AUGUST 26, 2007

NOTE: THIS PLAN IS NOT A LEGAL ENGINEERING DOCUMENT BUT AN ELECTRONIC DUPLICATE. THE ORIGINAL, SIGNED BY THE ENGINEER AND APPROVED FOR PUBLICATION, IS KEPT ON FILE AT THE WASHINGTON STATE DEPARTMENT OF TRANSPORTATION. A COPY MAY BE OBTAINED UPON REQUEST.

PRECAST CONCRETE DUAL FACED SLOPED MOUNTABLE CURB STANDARD PLAN F-10.64-00

SHEET 1 OF 1 SHEET

APPROVED FOR PUBLICATION

Ken L. Smith — STATE DESIGN ENGINEER

01-23-07 — DATE

Washington State Department of Transportation

EFFECTIVE: APRIL 2, 2007 TO JANUARY 6, 2008

EFFECTIVE: APRIL 2, 2007 TO JANUARY 6, 2008

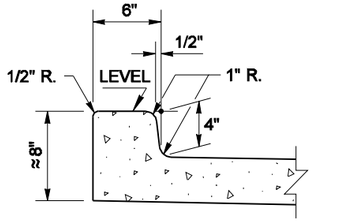

NOTE: EXTEND SIDEWALK TRANSVERSE JOINTS TO INCLUDE RAISED EDGE

RAISED EDGE DETAIL

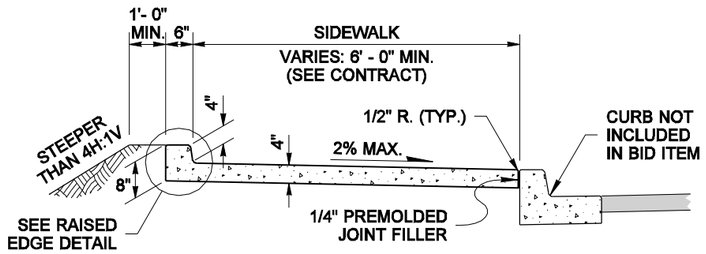

CEMENT CONCRETE SIDEWALK WITH RAISED EDGE

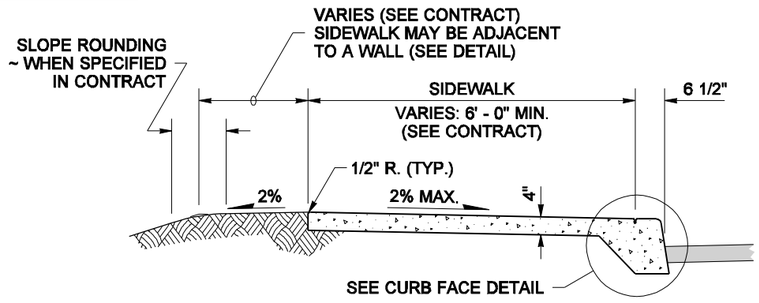

MONOLITHIC CEMENT CONCRETE CURB AND SIDEWALK

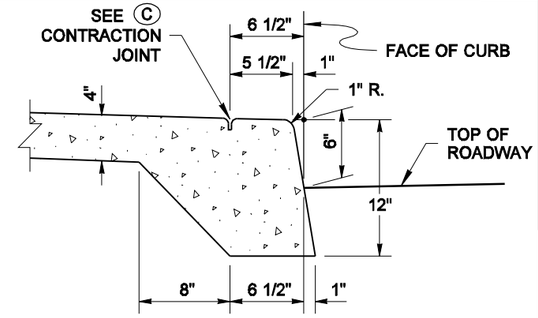

NOTE: EXTEND SIDEWALK TRANSVERSE EXPANSION JOINTS TO INCLUDE CURB (FULL DEPTH)

CURB FACE DETAIL

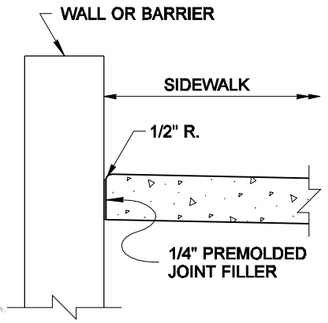

SIDEWALK ADJACENT TO WALL DETAIL

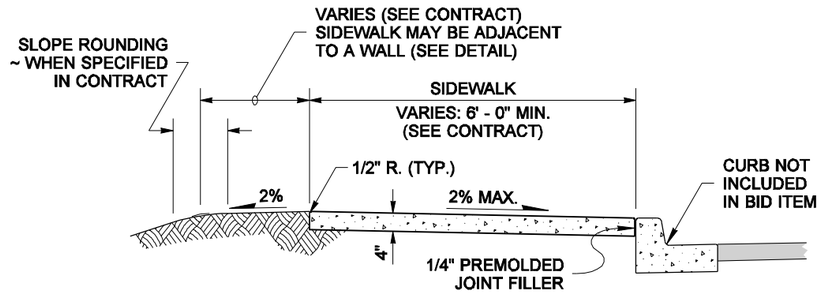

CEMENT CONCRETE SIDEWALK
ADJACENT TO CURB

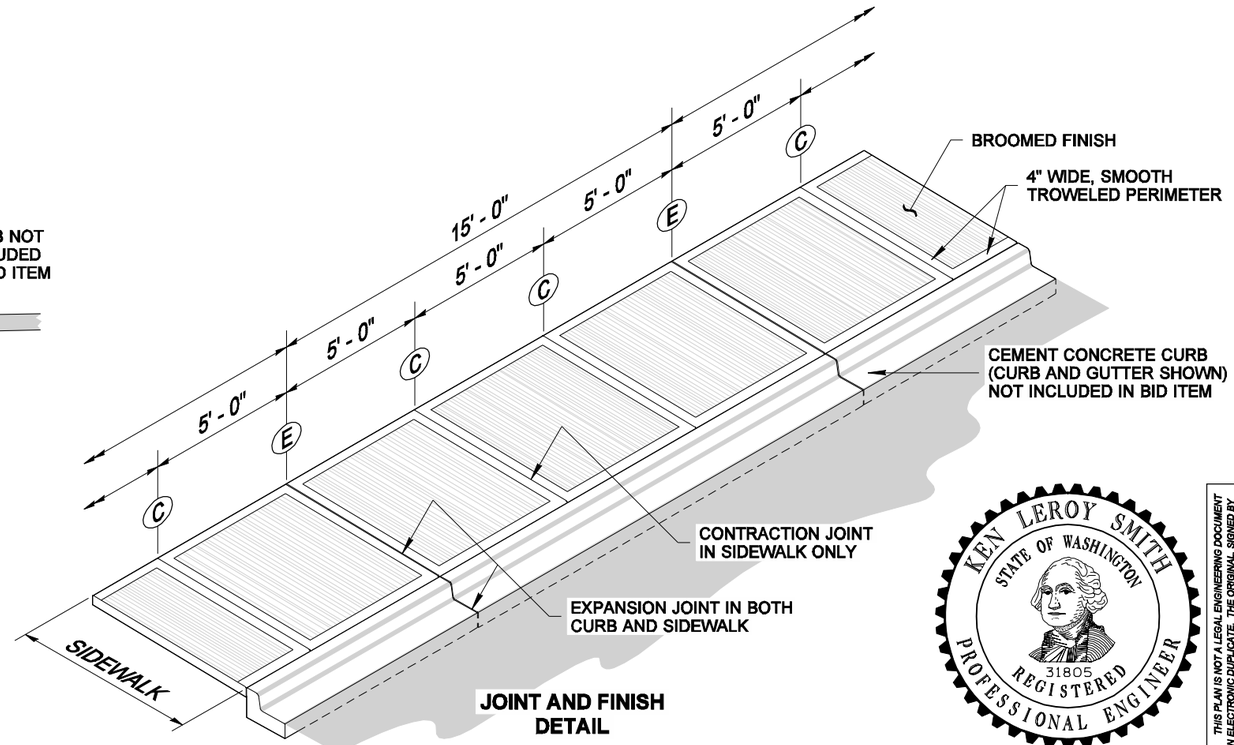

JOINT AND FINISH DETAIL

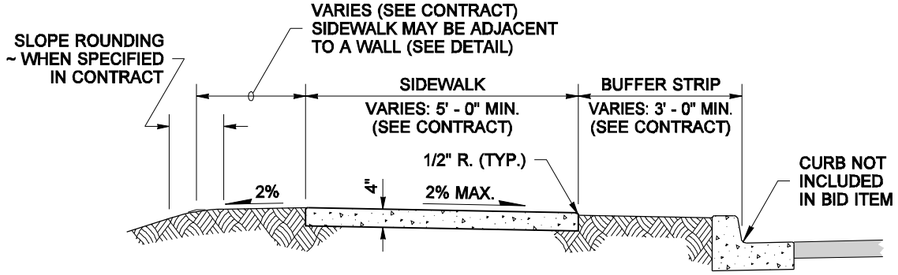

CEMENT CONCRETE SIDEWALK
ADJACENT TO BUFFER STRIP

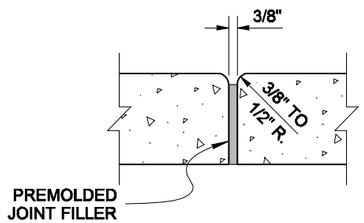

Ⓔ **EXPANSION JOINT**

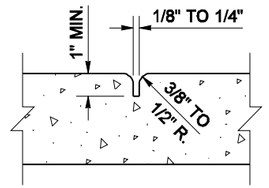

Ⓒ **CONTRACTION JOINT**

KEN LEROY SMITH
STATE OF WASHINGTON
31805
REGISTERED
PROFESSIONAL ENGINEER

EXPIRES AUGUST 26, 2007

NOTE: THIS PLAN IS NOT A LEGAL ENGINEERING DOCUMENT BUT AN ELECTRONIC DUPLICATE. THE ORIGINAL, SIGNED BY THE ENGINEER AND APPROVED FOR PUBLICATION, IS KEPT ON FILE AT THE WASHINGTON STATE DEPARTMENT OF TRANSPORTATION. A COPY MAY BE OBTAINED UPON REQUEST.

CEMENT CONCRETE SIDEWALK

STANDARD PLAN F-30.10-00

SHEET 1 OF 1 SHEET

APPROVED FOR PUBLICATION

Ken L. Smith — STATE DESIGN ENGINEER — *01-23-07* — DATE

Washington State Department of Transportation

DRAWN BY: MARK SUJKA

EFFECTIVE: APRIL 2, 2007 TO JANUARY 6, 2008

EFFECTIVE: APRIL 2, 2007 TO JANUARY 6, 2008

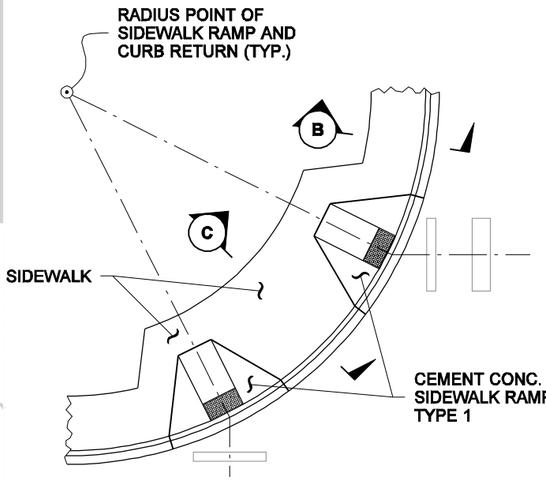

PLAN VIEW

LAYOUT 1
SEE NOTE 2

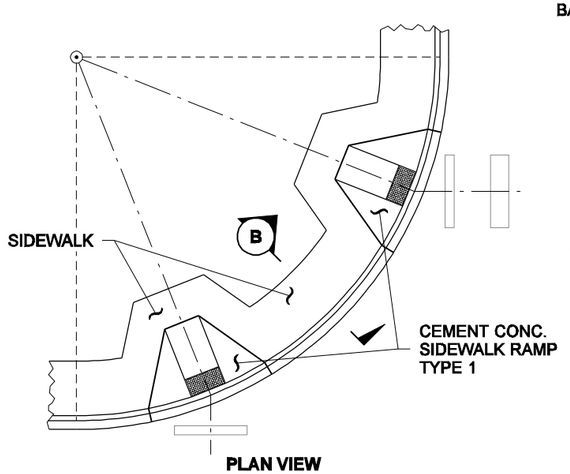

PLAN VIEW

LAYOUT 2
SEE NOTE 2

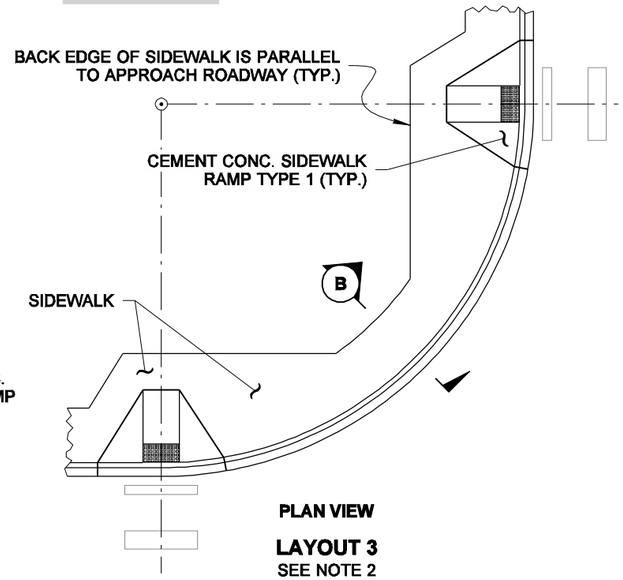

PLAN VIEW

LAYOUT 3
SEE NOTE 2

NOTES

1. The bottom of the ramp shall have a level area (not in excess of 2% in any direction), 4' × 4'.
2. Layouts 1, 2, & 3 require two (2) of this bid item: "Cement Conc. Sidewalk Ramp Type 1". The bid item does not include the adjacent Curb (or Curb & Gutter), or Sidewalk.
3. Ramp slopes shall not be steeper than 12H:1V.
4. Avoid placing drainage structures, junction boxes or other obstructions in front of ramp access areas.
5. Curb & Gutter is shown, see the Contract Plans for the curb design specified. See Standard Plan F-10.12 for curb details.
6. See Standard Plan F-30.10 for sidewalk joint placement and details.

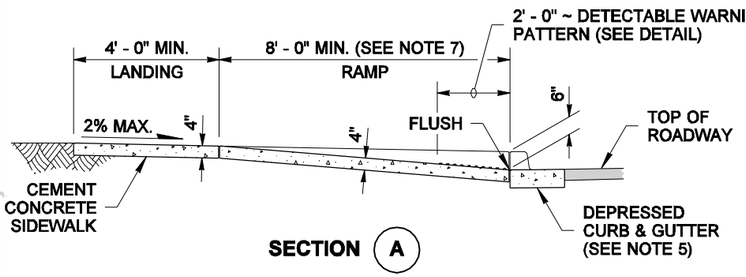

SECTION (A)

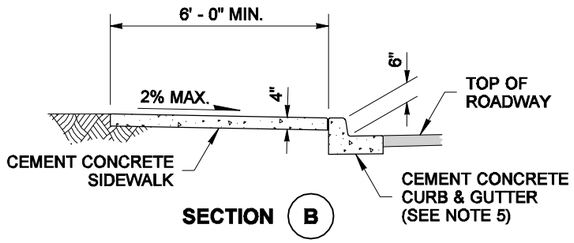

SECTION (B)

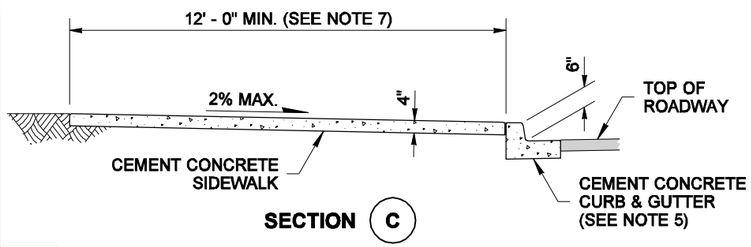

SECTION (C)

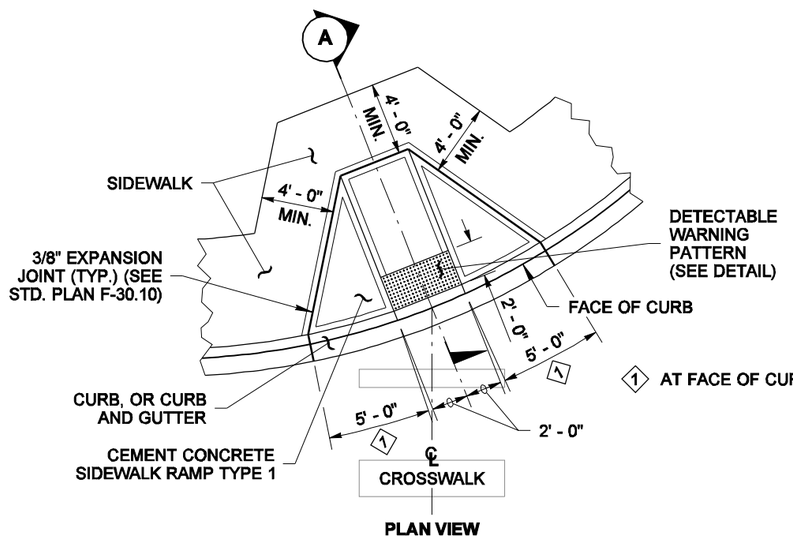

PLAN VIEW

SIDEWALK RAMP TYPE 1
FOR LAYOUTS 1, 2, & 3

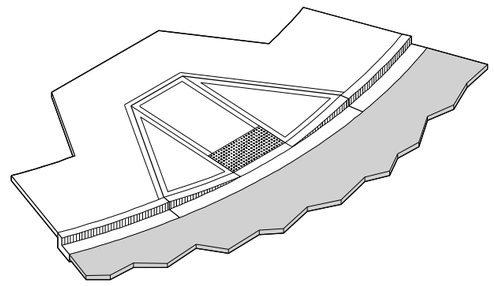

ISOMETRIC VIEW

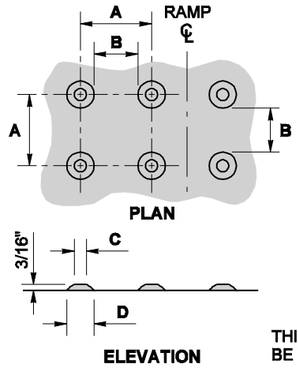

	MIN.	MAX.
A	1 5/8"	2 3/8"
B	5/8"	1 1/2"
C	7/16"	3/4"
D	7/8"	1 7/16"

THIS PATTERN AREA SHALL BE YELLOW IN COLOR

DETECTABLE WARNING PATTERN DETAIL

KEN LEROY SMITH
STATE OF WASHINGTON
31805
REGISTERED
PROFESSIONAL ENGINEER

EXPIRES AUGUST 26, 2007

NOTE: THIS PLAN IS NOT A LEGAL ENGINEERING DOCUMENT BUT AN ELECTRONIC DUPLICATE. THE ORIGINAL, SIGNED BY THE ENGINEER AND APPROVED FOR PUBLICATION, IS KEPT ON FILE AT THE WASHINGTON STATE DEPARTMENT OF TRANSPORTATION. A COPY MAY BE OBTAINED UPON REQUEST.

SIDEWALK RAMP TYPE 1 WITH LAYOUTS

STANDARD PLAN F-40.10-00

SHEET 1 OF 1 SHEET

APPROVED FOR PUBLICATION

Ken L. Smith — STATE DESIGN ENGINEER — *02-07-07* — DATE

Washington State Department of Transportation

DRAWN BY: MARK SUJKA

EFFECTIVE: APRIL 2, 2007 TO JANUARY 6, 2008

EFFECTIVE: APRIL 2, 2007 TO JANUARY 6, 2008

EFFECTIVE: APRIL 2, 2007 TO JANUARY 6, 2008

DRAWN BY: MARK SUJKA

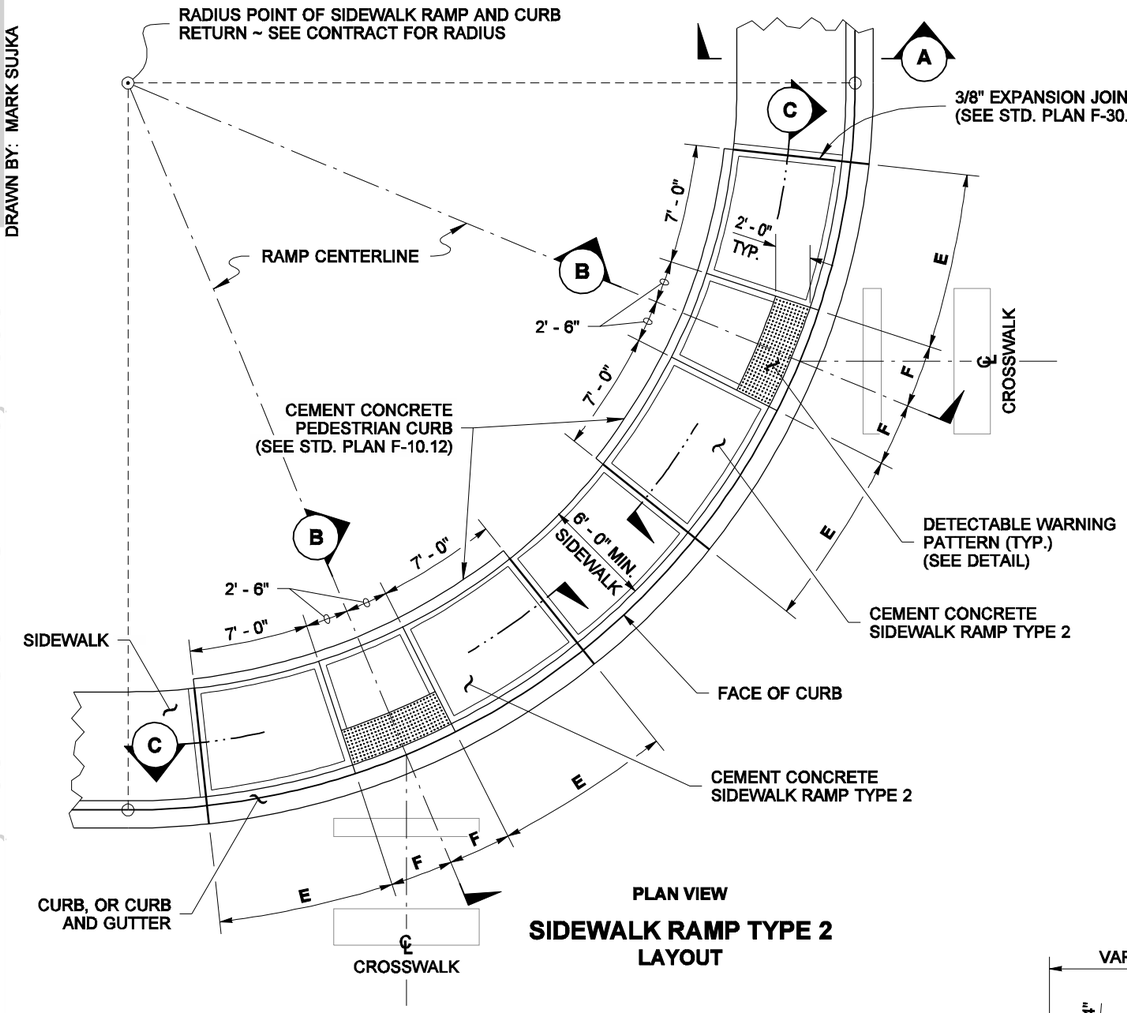

PLAN VIEW

SIDEWALK RAMP TYPE 2 LAYOUT

RADIUS AT FACE OF CURB	E	F
20 FEET	10' - 4 3/4"	3' - 8 1/2"
30 FEET	8' - 11 1/2"	3' - 2 1/4"
40 FEET	8' - 4 1/2"	2' - 11 3/4"
50 FEET	8' - 0 3/4"	2' - 10 1/4"
60 FEET	7' - 10 1/4"	2' - 9 3/4"
70 FEET	7' - 8 3/4"	2' - 9"
80 FEET	7' - 7 1/2"	2' - 8 3/4"
90 FEET	7' - 6 1/2"	2' - 8 1/4"
100 FEET	7' - 6"	2' - 8"
	DIMENSIONS AT FACE OF CURB	

INTERMEDIATE RADII CAN BE INTERPOLATED

NOTES

1. The bottom of the ramp shall have a level area (not in excess of 2% in any direction), 4' × 4'.
2. The Type 2 Ramp Layout requires two (2) of this bid item: "Cement Conc. Sidewalk Ramp Type 2". The bid item does not include the adjacent Curb (or Curb & Gutter), the Sidewalk between Ramps, or the Cement Conc. Pedestrian Curb.
3. Ramp slopes shall not be steeper than 12H:1V.
4. Avoid placing drainage structures, junction boxes or other obstructions in front of ramp access areas.
5. Curb & Gutter is shown, see the Contract Plans for the curb design specified. See Standard Plan F-10.12 for curb details.
6. See Std. Plan F-30.10 for sidewalk joint placement and details.

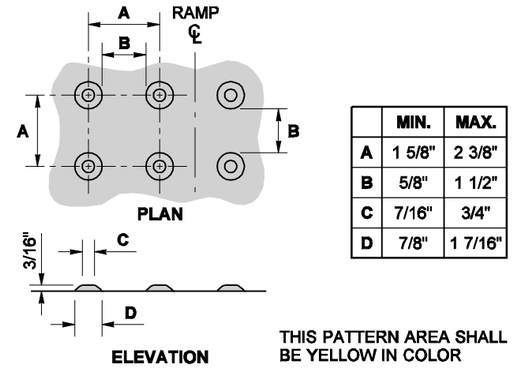

	MIN.	MAX.
A	1 5/8"	2 3/8"
B	5/8"	1 1/2"
C	7/16"	3/4"
D	7/8"	1 7/16"

THIS PATTERN AREA SHALL BE YELLOW IN COLOR

DETECTABLE WARNING PATTERN DETAIL

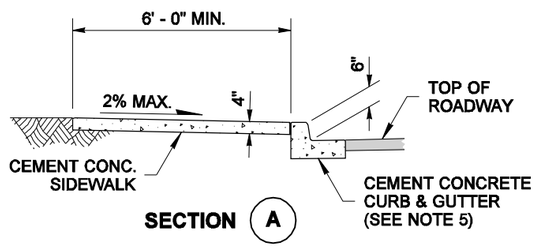

SECTION (A)

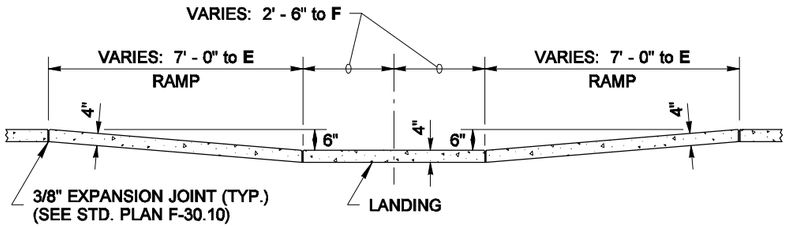

SECTION (C)

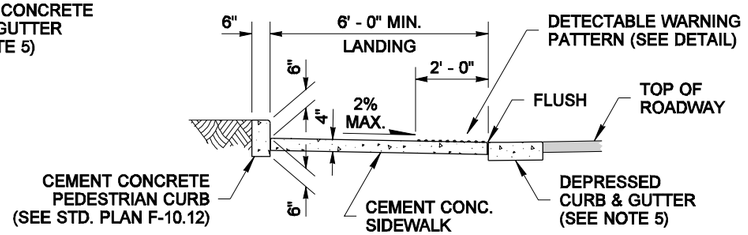

SECTION (B)

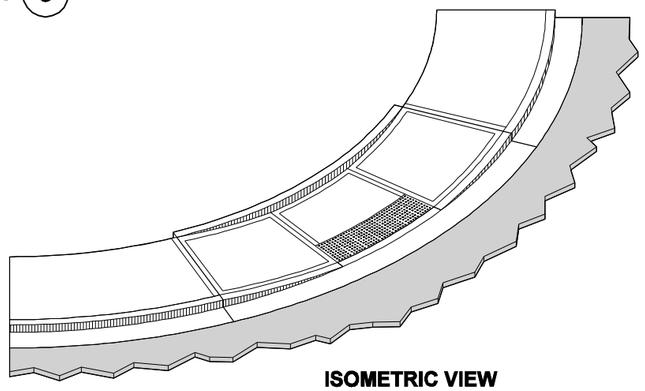

ISOMETRIC VIEW



EXPIRES AUGUST 26, 2007

NOTE: THIS PLAN IS NOT A LEGAL ENGINEERING DOCUMENT BUT AN ELECTRONIC DUPLICATE. THE ORIGINAL, SIGNED BY THE ENGINEER AND APPROVED FOR PUBLICATION, IS KEPT ON FILE AT THE WASHINGTON STATE DEPARTMENT OF TRANSPORTATION. A COPY MAY BE OBTAINED UPON REQUEST.

SIDEWALK RAMP TYPE 2 WITH LAYOUT

STANDARD PLAN F-40.12-00

SHEET 1 OF 1 SHEET

APPROVED FOR PUBLICATION

Ken L. Smith — STATE DESIGN ENGINEER — *02-07-07* — DATE

Washington State Department of Transportation

EFFECTIVE: APRIL 2, 2007 TO JANUARY 6, 2008

EFFECTIVE: APRIL 2, 2007 TO JANUARY 6, 2008

EFFECTIVE: APRIL 2, 2007 TO JANUARY 6, 2008

EFFECTIVE: APRIL 2, 2007 TO JANUARY 6, 2008

DRAWN BY: MARK SUJKA

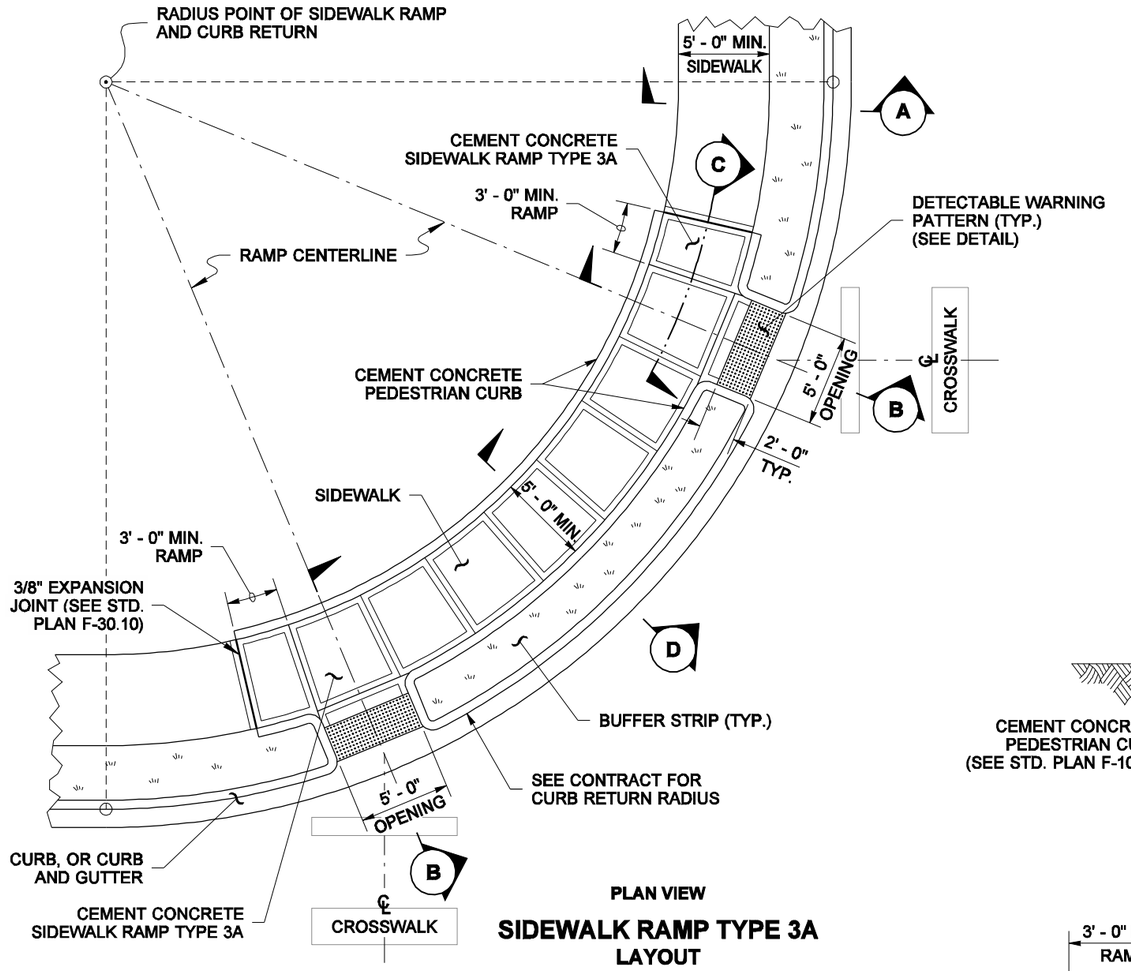

PLAN VIEW

SIDEWALK RAMP TYPE 3A LAYOUT

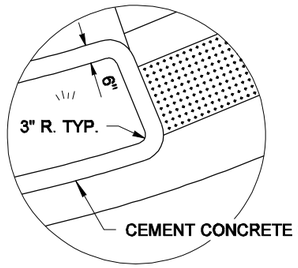

CURB RADIUS DETAIL

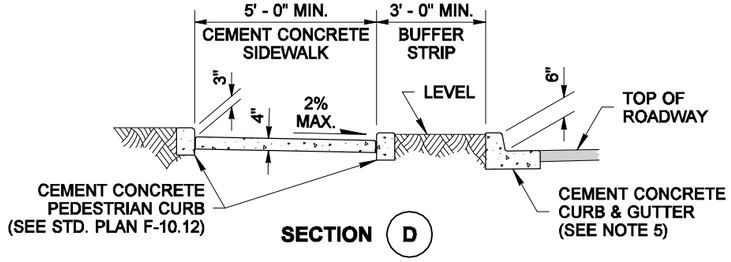

SECTION (D)

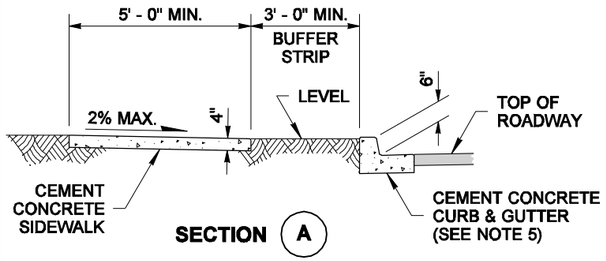

SECTION (A)

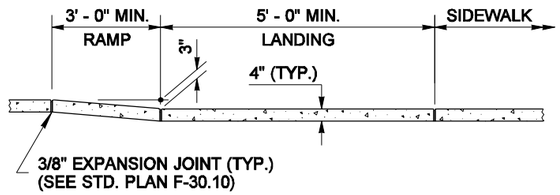

SECTION (C)

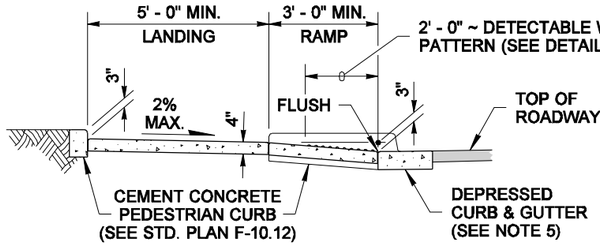

SECTION (B)

NOTES

1. The bottom of the ramp shall have a level area (not in excess of 2% in any direction), 4' × 4'.
2. The Type 3A Ramp Layout requires two (2) of this bid item: "Cement Conc. Sidewalk Ramp Type 3A". The bid item does not include the adjacent Curb (or Curb & Gutter), the Sidewalk between Ramps, or the Cement Conc. Pedestrian Curb.
3. Ramp slopes shall not be steeper than 12H:1V.
4. Avoid placing drainage structures, junction boxes or other obstructions in front of ramp access areas.
5. Curb & Gutter is shown, see the Contract Plans for the curb design specified. See Standard Plan F-10.12 for curb details.
6. See Std. Plan F-30.10 for sidewalk joint placement and details.

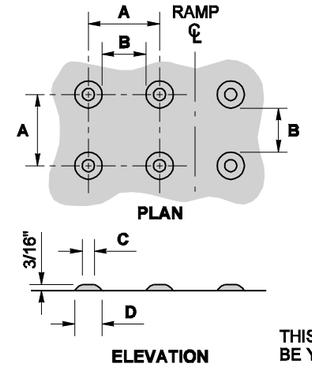

	MIN.	MAX.
A	1 5/8"	2 3/8"
B	5/8"	1 1/2"
C	7/16"	3/4"
D	7/8"	1 7/16"

THIS PATTERN AREA SHALL BE YELLOW IN COLOR

DETECTABLE WARNING PATTERN DETAIL

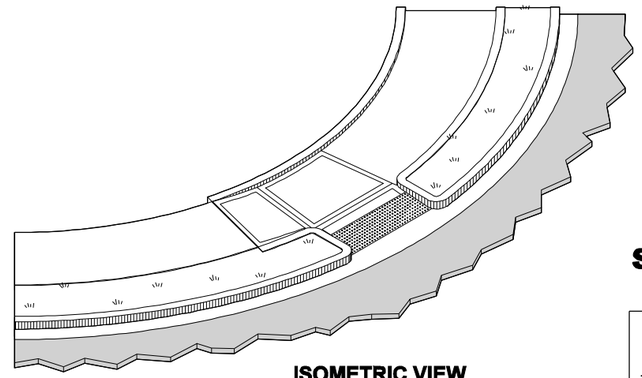

ISOMETRIC VIEW



EXPIRES AUGUST 26, 2007

NOTE: THIS PLAN IS NOT A LEGAL ENGINEERING DOCUMENT BUT AN ELECTRONIC DUPLICATE. THE ORIGINAL, SIGNED BY THE ENGINEER AND APPROVED FOR PUBLICATION, IS KEPT ON FILE AT THE WASHINGTON STATE DEPARTMENT OF TRANSPORTATION. A COPY MAY BE OBTAINED UPON REQUEST.

SIDEWALK RAMP TYPE 3A WITH LAYOUT

STANDARD PLAN F-40.14-00

SHEET 1 OF 1 SHEET

APPROVED FOR PUBLICATION

Ken L. Smith — STATE DESIGN ENGINEER

02-07-07 — DATE

Washington State Department of Transportation

EFFECTIVE: APRIL 2, 2007 TO JANUARY 6, 2008

EFFECTIVE: APRIL 2, 2007 TO JANUARY 6, 2008

DRAWN BY: MARK SUJKA

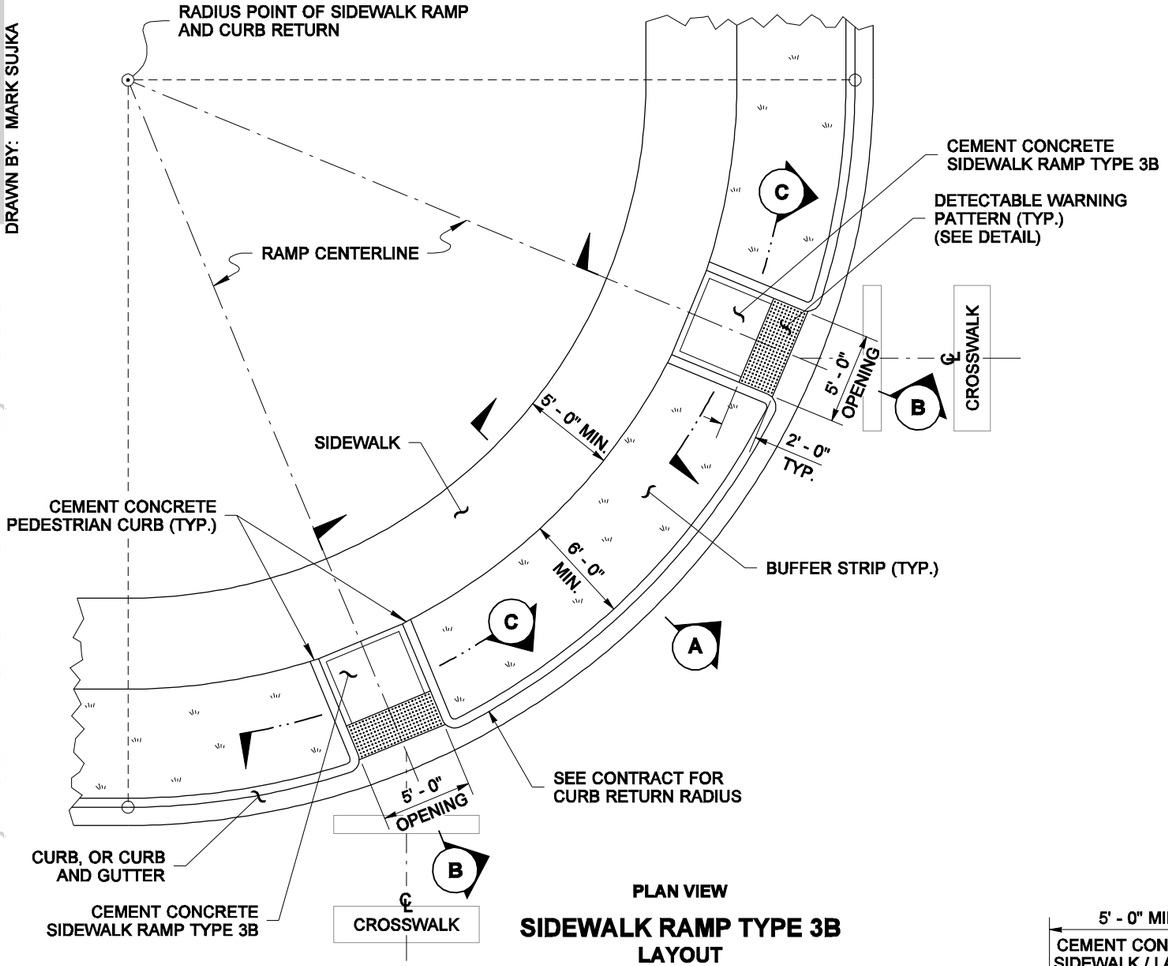

PLAN VIEW

SIDEWALK RAMP TYPE 3B LAYOUT

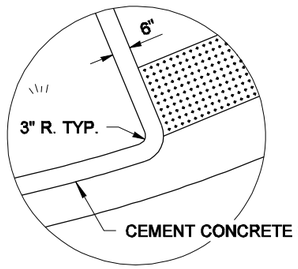

CURB RADIUS DETAIL

NOTES

1. The bottom of the ramp shall have a level area (not in excess of 2% in any direction), 4' × 4'.
2. The Type 3B Ramp Layout requires two (2) of this bid item: "Cement Conc. Sidewalk Ramp Type 3B". The bid item does not include the adjacent Curb (or Curb & Gutter), the Sidewalk between Ramps, or the Cement Conc. Pedestrian Curb.
3. Ramp slopes shall not be steeper than 12H:1V.
4. Avoid placing drainage structures, junction boxes or other obstructions in front of ramp access areas.
5. Curb & Gutter is shown, see the Contract Plans for the curb design specified. See Standard Plan F-10.12 for curb details.
6. See Std. Plan F-30.10 for sidewalk joint placement and details.

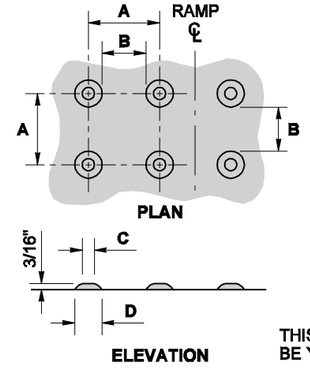

	MIN.	MAX.
A	1 5/8"	2 3/8"
B	5/8"	1 1/2"
C	7/16"	3/4"
D	7/8"	1 7/16"

THIS PATTERN AREA SHALL BE YELLOW IN COLOR

DETECTABLE WARNING PATTERN DETAIL

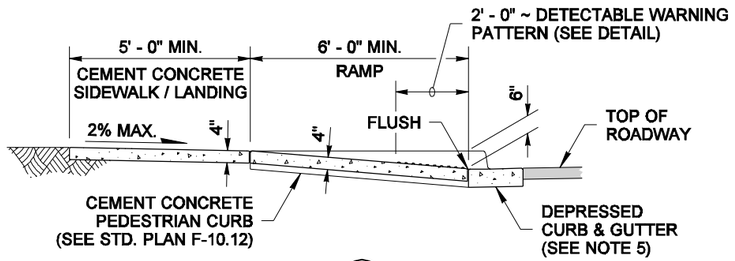

SECTION (B)

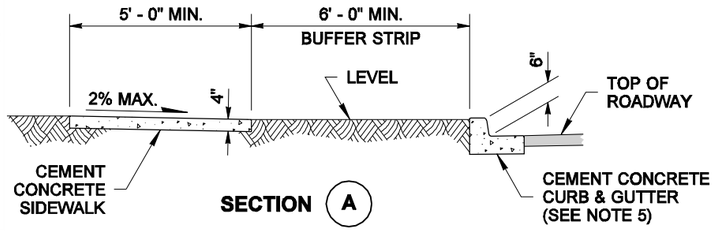

SECTION (A)

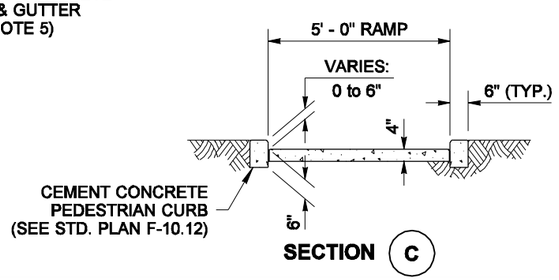

SECTION (C)

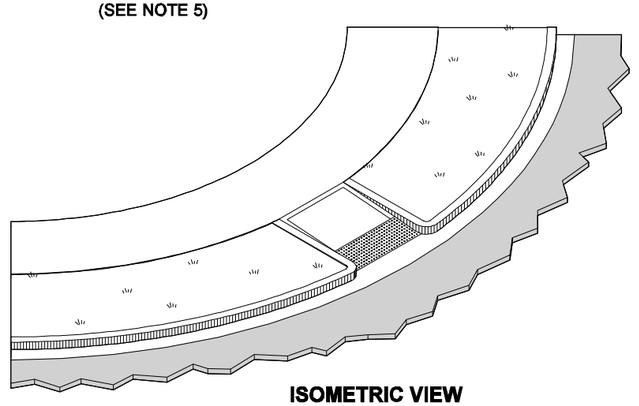

ISOMETRIC VIEW

KEN LEROY SMITH
STATE OF WASHINGTON
31805
REGISTERED
PROFESSIONAL ENGINEER

EXPIRES AUGUST 26, 2007

NOTE: THIS PLAN IS NOT A LEGAL ENGINEERING DOCUMENT BUT AN ELECTRONIC DUPLICATE. THE ORIGINAL, SIGNED BY THE ENGINEER, AND APPROVED FOR PUBLICATION, IS KEPT ON FILE AT THE WASHINGTON STATE DEPARTMENT OF TRANSPORTATION. A COPY MAY BE OBTAINED UPON REQUEST.

SIDEWALK RAMP TYPE 3B WITH LAYOUT

STANDARD PLAN F-40.15-00

SHEET 1 OF 1 SHEET

APPROVED FOR PUBLICATION

Ken L. Smith — STATE DESIGN ENGINEER

02-07-07 — DATE

Washington State Department of Transportation

EFFECTIVE: APRIL 2, 2007 TO JANUARY 6, 2008

EFFECTIVE: APRIL 2, 2007 TO JANUARY 6, 2008

DRAWN BY: MARK SUJKA

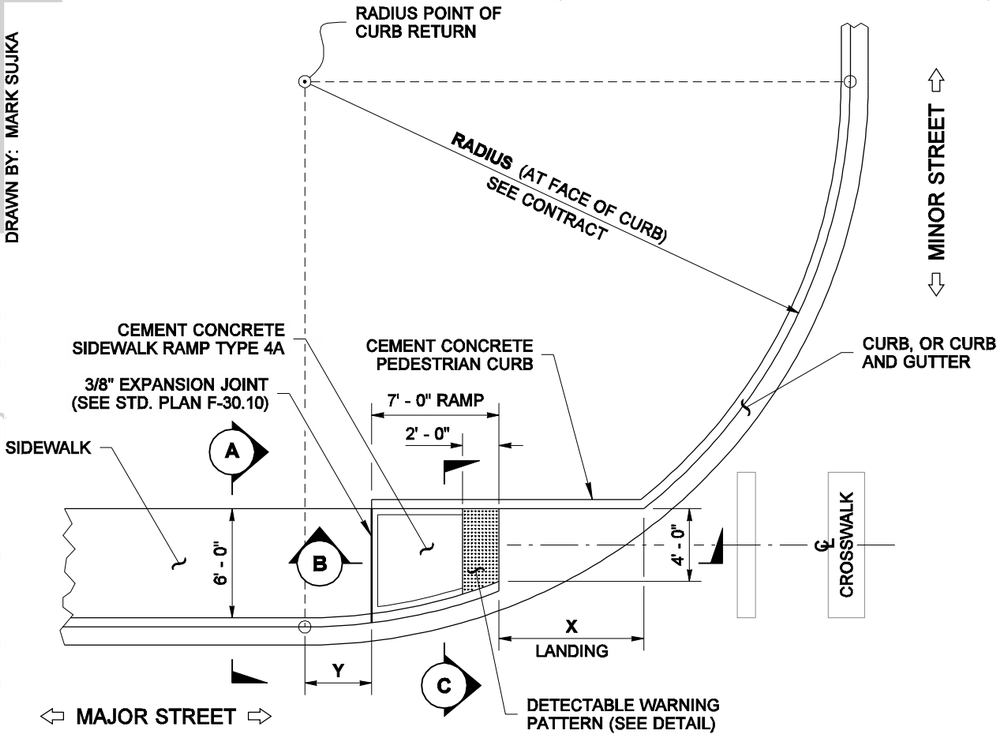

PLAN VIEW

SIDEWALK RAMP TYPE 4A
LAYOUT

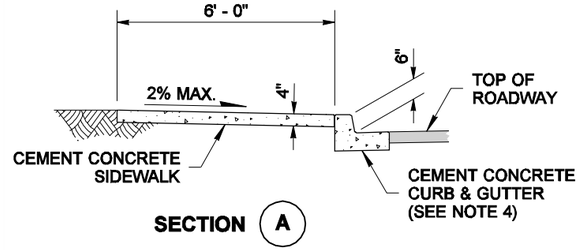

SECTION (A)

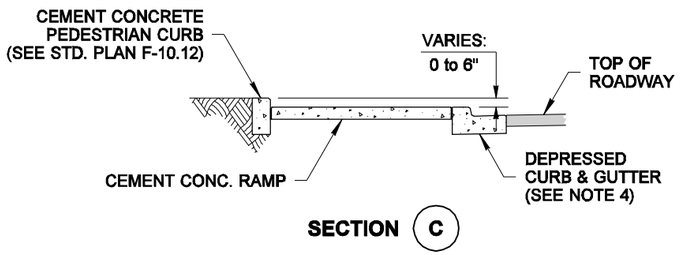

SECTION (C)

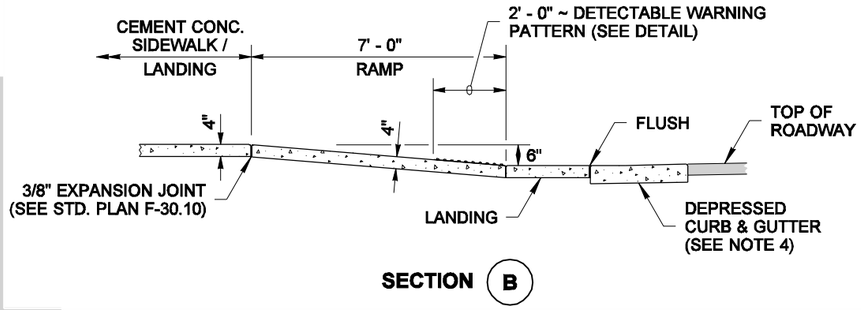

SECTION (B)

EFFECTIVE: APRIL 2, 2007 TO JANUARY 6, 2008

RADIUS AT FACE OF CURB	X LANDING	Y DISTANCE FROM P.C.
20 FEET	6' - 2 1/2"	1' - 7"
30 FEET	8' - 0 1/4"	3' - 8"
40 FEET	9' - 6 1/4"	5' - 4 3/4"
50 FEET	10' - 9 3/4"	6' - 11"
60 FEET	11' - 11 1/2"	8' - 3 1/2"
70 FEET	13' - 0"	9' - 6 1/2"
80 FEET	13' - 11 1/2"	10' - 8 1/2"
90 FEET	14' - 10 1/2"	11' - 9 3/4"
100 FEET	15' - 8 3/4"	12' - 10 1/4"

INTERMEDIATE RADII CAN BE INTERPOLATED

EFFECTIVE: APRIL 2, 2007 TO JANUARY 6, 2008

NOTES

1. This layout is used to provide access to a single crosswalk parallel to the major street. The bid item "Cement Conc. Sidewalk Ramp Type 4A" does not include the adjacent Curb (or Curb & Gutter), the Sidewalk, or the Cement Conc. Pedestrian Curb.
2. Ramp slopes shall not be steeper than 12H:1V.
3. Avoid placing drainage structures, junction boxes or other obstructions in front of ramp access areas.
4. Curb & Gutter is shown, see the Contract Plans for the curb design specified. See Standard Plan F-10.12 for curb details.
5. See Std. Plan F-30.10 for sidewalk joint placement and details.
6. The bottom of the ramp shall have a level area (not in excess of 2% in any direction), 4' × 4'.

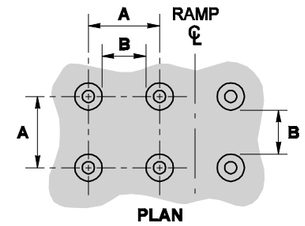

	MIN.	MAX.
A	1 5/8"	2 3/8"
B	5/8"	1 1/2"
C	7/16"	3/4"
D	7/8"	1 7/16"

ELEVATION

THIS PATTERN AREA SHALL BE YELLOW IN COLOR

DETECTABLE WARNING PATTERN DETAIL

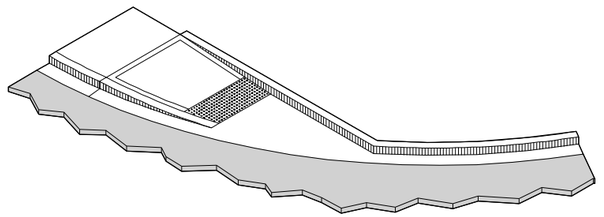

ISOMETRIC VIEW

KEN LEROY SMITH
STATE OF WASHINGTON
31805
REGISTERED
PROFESSIONAL ENGINEER

EXPIRES AUGUST 26, 2007

NOTE: THIS PLAN IS NOT A LEGAL ENGINEERING DOCUMENT BUT AN ELECTRONIC DUPLICATE. THE ORIGINAL, SIGNED BY THE ENGINEER AND APPROVED FOR PUBLICATION, IS KEPT ON FILE AT THE WASHINGTON STATE DEPARTMENT OF TRANSPORTATION. A COPY MAY BE OBTAINED UPON REQUEST.

SIDEWALK RAMP TYPE 4A WITH LAYOUT

STANDARD PLAN F-40.16-00

SHEET 1 OF 1 SHEET

APPROVED FOR PUBLICATION

Ken L. Smith — STATE DESIGN ENGINEER — *02-07-07* — DATE

Washington State Department of Transportation

EFFECTIVE: APRIL 2, 2007 TO JANUARY 6, 2008

EFFECTIVE: APRIL 2, 2007 TO JANUARY 6, 2008

DRAWN BY: MARK SUJKA

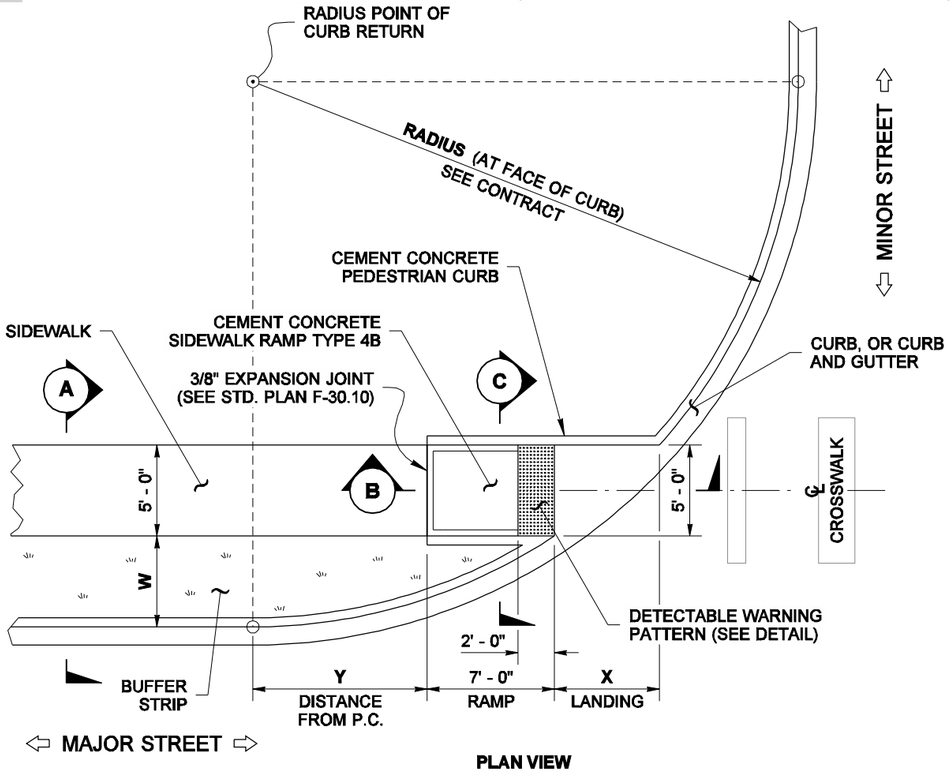

PLAN VIEW

SIDEWALK RAMP TYPE 4B
PLAN

RADIUS AT FACE OF CURB	W = 3' - 0"		W = 4' - 0"		W = 5' - 0"		W = 6' - 0"		W = 7' - 0"	
	X	Y	X	Y	X	Y	X	Y	X	Y
20 FEET	5' - 5 1/2"	3' - 6 1/2"	4' - 8 1/2"	5' - 0"	4' - 1"	6' - 2 3/4"	3' - 7"	7' - 3 1/2"	3' - 1 1/2"	8' - 2 1/2"
30 FEET	7' - 3 3/4"	6' - 1"	6' - 5 1/2"	7' - 11 1/2"	5' - 9 1/4"	9' - 7"	5' - 2 1/2"	11' - 0"	4' - 8 3/4"	12' - 3 1/4"
40 FEET	8' - 9 1/2"	8' - 2 1/2"	7' - 10"	10' - 5 1/4"	7' - 1"	12' - 4 1/2"	6' - 5 3/4"	14' - 3/4"	5' - 11 1/2"	15' - 7 1/4"
50 FEET	10' - 3/4"	10' - 3/4"	9' - 1/4"	12' - 7 1/4"	8' - 2 1/2"	14' - 9 1/2"	7' - 6 1/2"	16' - 9"	6' - 11 3/4"	18' - 6 1/4"
60 FEET	11' - 2 1/2"	11' - 8 3/4"	10' - 3/4"	14' - 6 1/2"	9' - 2 1/4"	16' - 11 3/4"	8' - 5 3/4"	19' - 1 3/4"	7' - 10 1/2"	21' - 1 1/2"
70 FEET	12' - 2 3/4"	13' - 3 1/4"	11' - 1/4"	16' - 4"	10' - 1"	18' - 11 3/4"	9' - 3 3/4"	21' - 4 1/4"	8' - 8 1/4"	23' - 6 1/4"
80 FEET	13' - 2"	14' - 8 1/2"	11' - 10 1/2"	17' - 11 3/4"	10' - 10 3/4"	20' - 10"	10' - 1"	23' - 4 3/4"	9' - 5"	25' - 8 3/4"
90 FEET	14' - 1/2"	16' - 1/2"	12' - 8 1/4"	19' - 6 1/2"	11' - 7 3/4"	22' - 7"	10' - 9 3/4"	25' - 3 3/4"	10' - 1 1/4"	27' - 9 1/2"
100 FEET	14' - 10 1/2"	17' - 3 3/4"	13' - 5 1/2"	21' - 0"	12' - 4 1/4"	24' - 2 3/4"	11' - 5 3/4"	27' - 1 1/2"	10' - 9"	29' - 9"

INTERMEDIATE RADII CAN BE INTERPOLATED

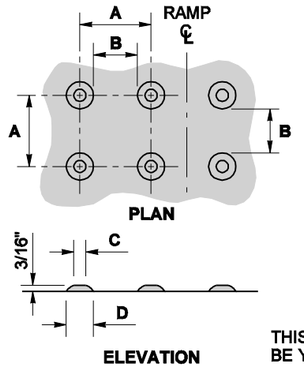

	MIN.	MAX.
A	1 5/8"	2 3/8"
B	5/8"	1 1/2"
C	7/16"	3/4"
D	7/8"	1 7/16"

ELEVATION

THIS PATTERN AREA SHALL BE YELLOW IN COLOR

DETECTABLE WARNING PATTERN DETAIL

NOTES

1. This layout is used to provide access to a single crosswalk parallel to the major street. The bid item "Cement Conc. Sidewalk Ramp Type 4B" does not include the adjacent Curb (or Curb & Gutter), the Sidewalk, or the Cement Conc. Pedestrian Curb.
2. Ramp slopes shall not be steeper than 12H:1V.
3. Avoid placing drainage structures, junction boxes or other obstructions in front of ramp access areas.
4. Curb & Gutter is shown, see the Contract Plans for the curb design specified. See Standard Plan F-10.12 for curb details.
5. See Std. Plan F-30.10 for sidewalk joint placement and details.
6. The bottom of the ramp shall have a level area (not in excess of 2% in any direction), 4' × 4'.

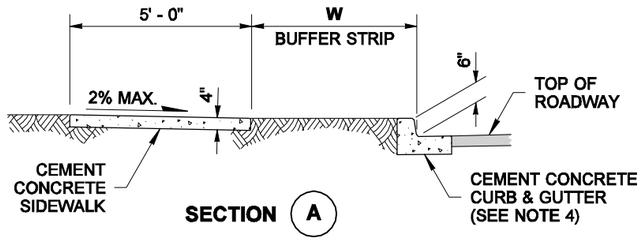

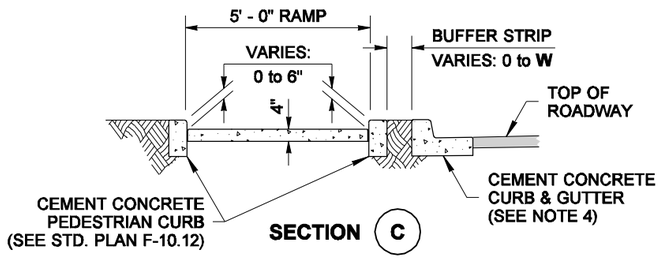

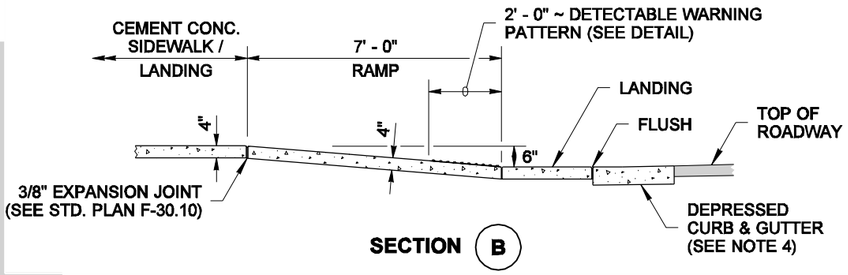

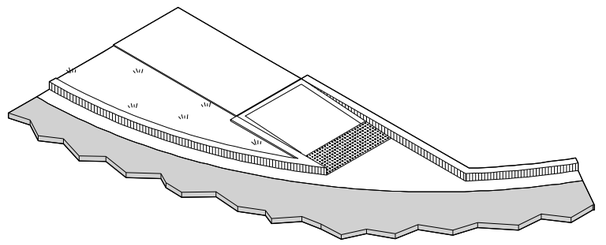

ISOMETRIC VIEW



EXPIRES AUGUST 26, 2007

NOTE: THIS PLAN IS NOT A LEGAL ENGINEERING DOCUMENT BUT AN ELECTRONIC DUPLICATE. THE ORIGINAL, SIGNED BY THE ENGINEER AND APPROVED FOR PUBLICATION, IS KEPT ON FILE AT THE WASHINGTON STATE DEPARTMENT OF TRANSPORTATION. A COPY MAY BE OBTAINED UPON REQUEST.

SIDEWALK RAMP TYPE 4B WITH LAYOUT

STANDARD PLAN F-40.18-00

SHEET 1 OF 1 SHEET

APPROVED FOR PUBLICATION

Ken L. Smith — STATE DESIGN ENGINEER — *02-07-07* — DATE

Washington State Department of Transportation

EFFECTIVE: APRIL 2, 2007 TO JANUARY 6, 2008

EFFECTIVE: APRIL 2, 2007 TO JANUARY 6, 2008

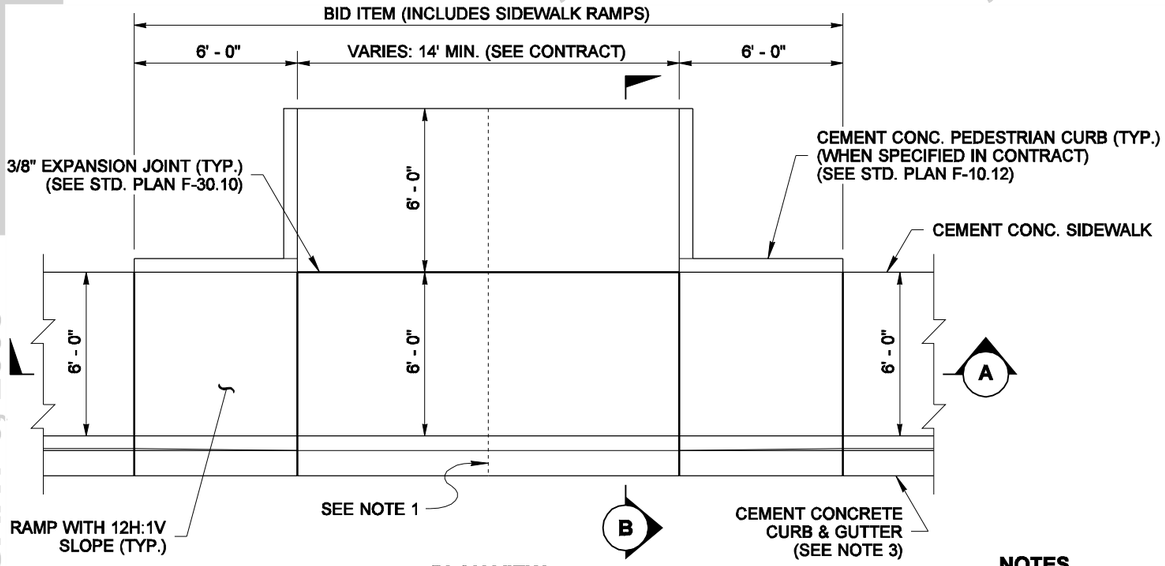

PLAN VIEW

CEMENT CONCRETE DRIVEWAY ENTRANCE TYPE 1

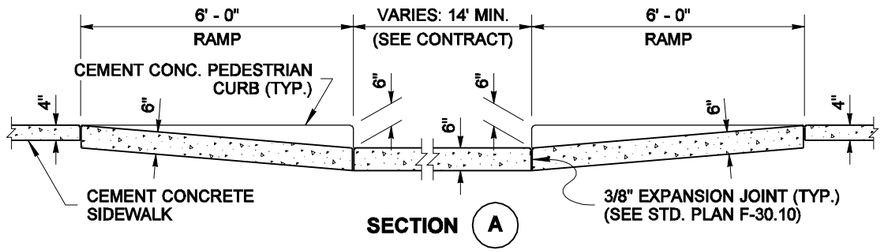

SECTION (A)

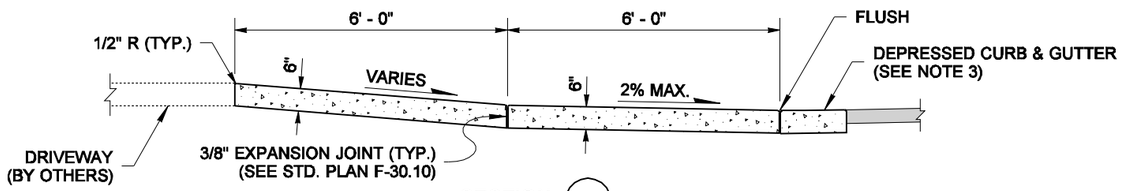

SECTION (B)

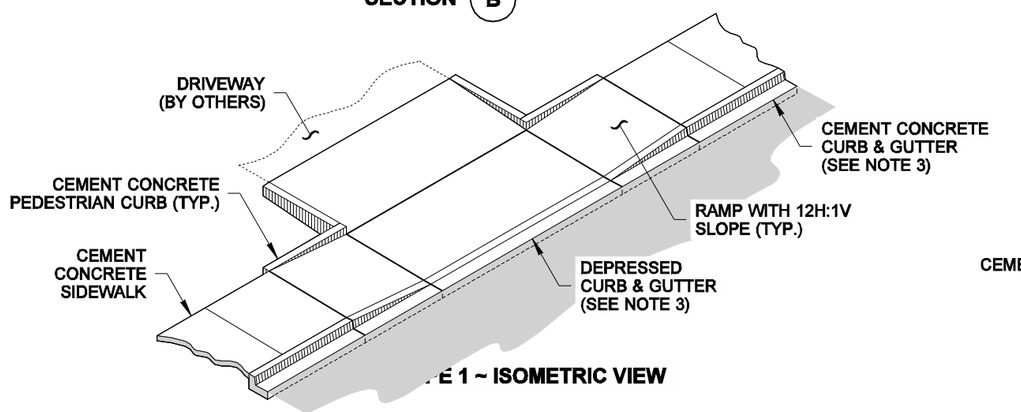

E 1 ~ ISOMETRIC VIEW

NOTES

1. When the driveway width exceeds 15 feet, construct a full depth expansion joint (see Std. Plan F-30.10) with 3/8" joint filler along the driveway centerline. Construct expansion joints parallel with the center-line as required at 15' maximum spacing when driveway widths exceed 30'.
2. See Std. Plan F-30.10 for sidewalk details.
3. Curb and gutter shown, see the Contract Plans for the curb design specified. See Standard Plan F-10.12 for curb details.
4. Avoid placing drainage structures, junction boxes or other obstructions in front of driveway entrances.

EFFECTIVE: APRIL 2, 2007 TO JANUARY 6, 2008

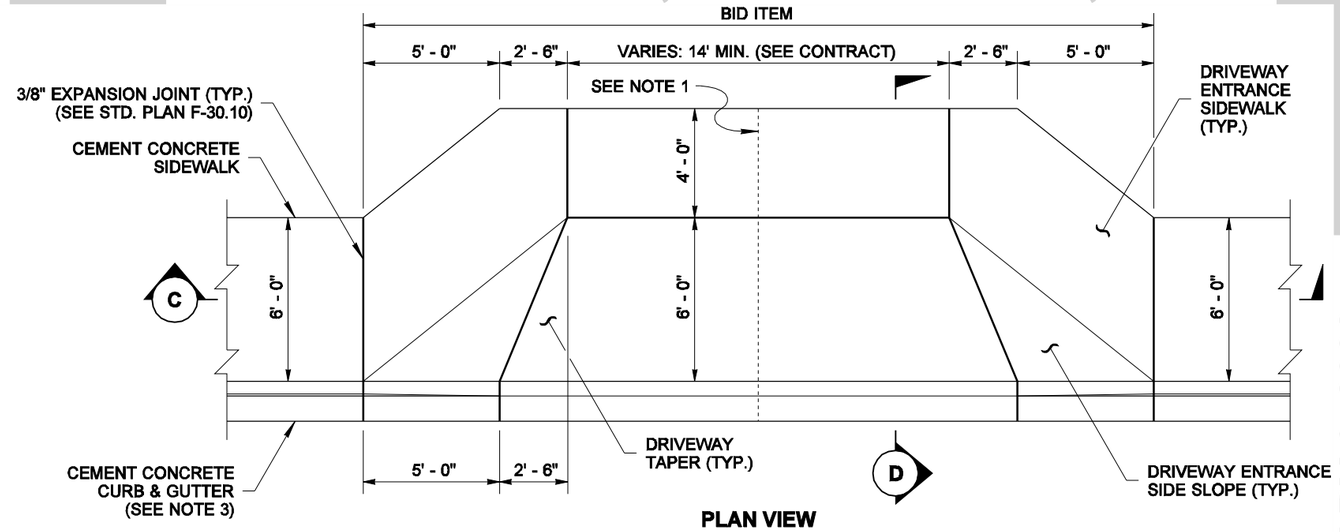

PLAN VIEW

CEMENT CONCRETE DRIVEWAY ENTRANCE TYPE 2

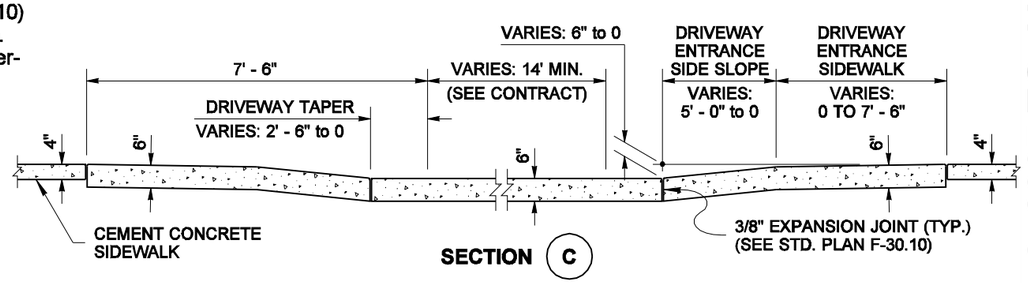

SECTION (C)

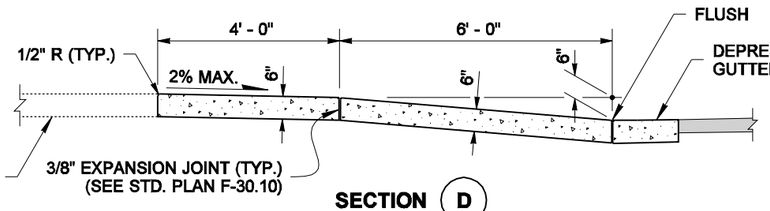

SECTION (D)

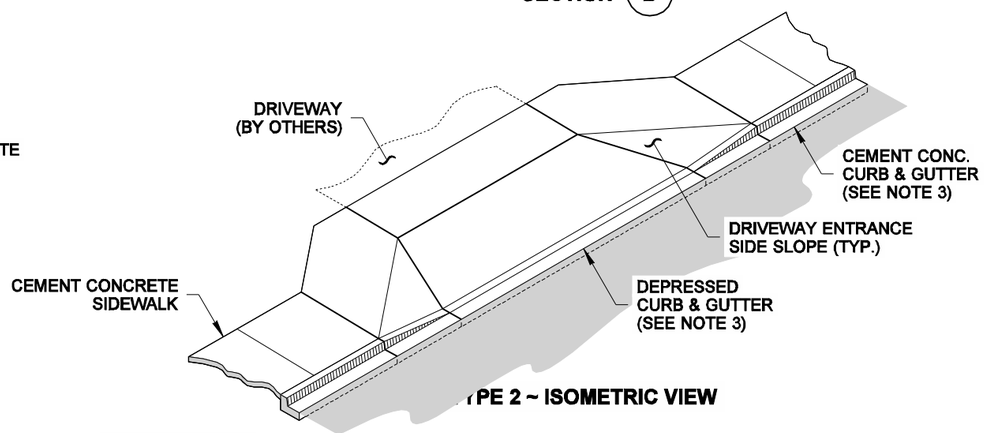

PE 2 ~ ISOMETRIC VIEW

KEN LEROY SMITH
STATE OF WASHINGTON
31805
REGISTERED
PROFESSIONAL ENGINEER

EXPIRES AUGUST 26, 2007

NOTE: THIS PLAN IS NOT A LEGAL ENGINEERING DOCUMENT BUT AN ELECTRONIC DUPLICATE. THE ORIGINAL, SIGNED BY THE ENGINEER AND APPROVED FOR PUBLICATION, IS KEPT ON FILE AT THE WASHINGTON STATE DEPARTMENT OF TRANSPORTATION. A COPY MAY BE OBTAINED UPON REQUEST.

CEMENT CONCRETE DRIVEWAY ENTRANCE TYPES 1, 2, 3 & 4

STANDARD PLAN F-80.10-00

SHEET 1 OF 2 SHEETS

APPROVED FOR PUBLICATION

Ken L. Smith — *01-23-07*

STATE DESIGN ENGINEER — DATE

Washington State Department of Transportation

DRAWN BY: MARK SUJKA

EFFECTIVE: APRIL 2, 2007 TO JANUARY 6, 2008

EFFECTIVE: APRIL 2, 2007 TO JANUARY 6, 2008

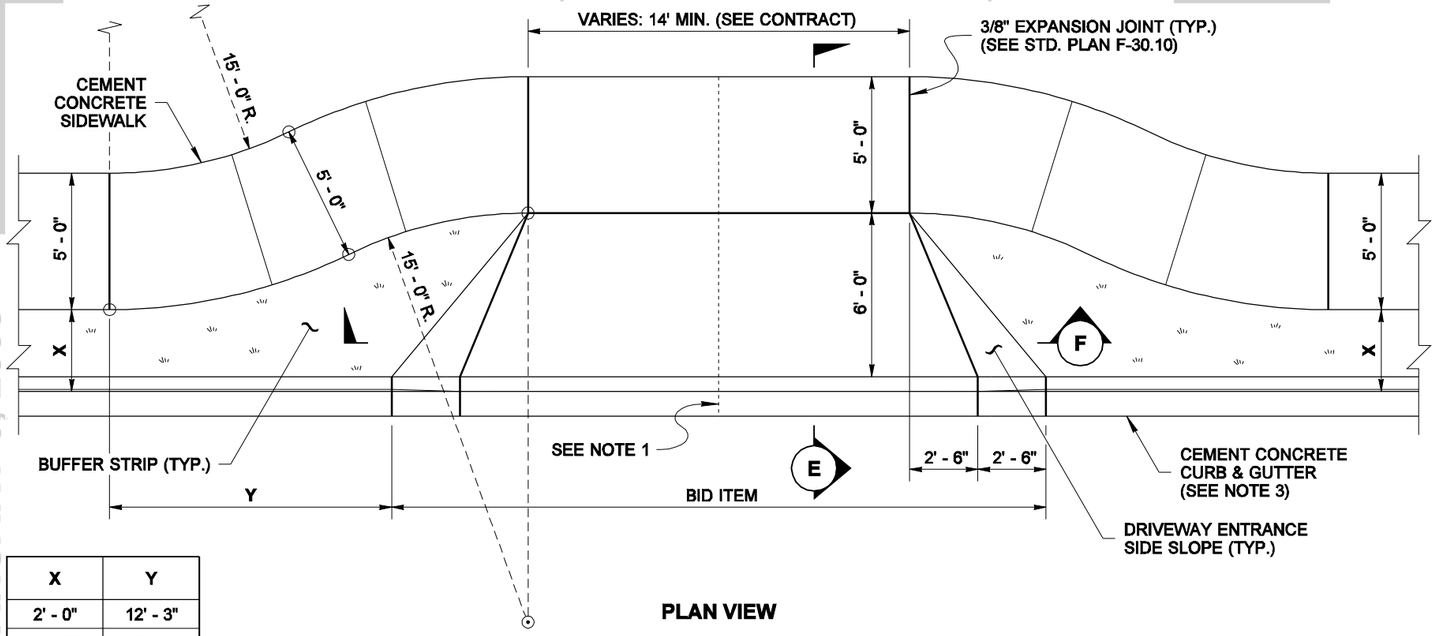

PLAN VIEW

X	Y
2' - 0"	12' - 3"
3' - 0"	10' - 4"
4' - 0"	8' - 1"
5' - 0"	5' - 3 1/4"
6' - 0"	1' - 1 3/4"

CEMENT CONCRETE DRIVEWAY ENTRANCE TYPE 3

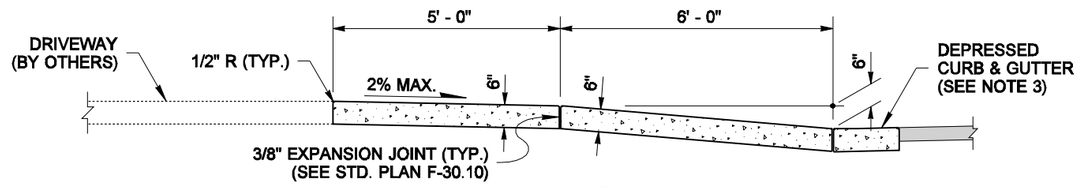

SECTION (E)

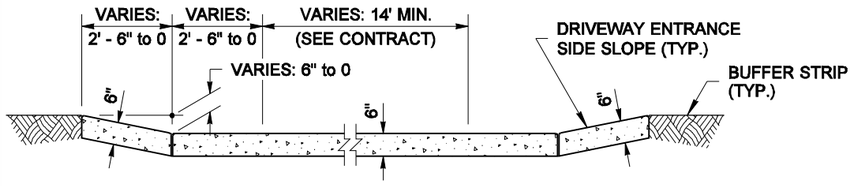

SECTION (F)

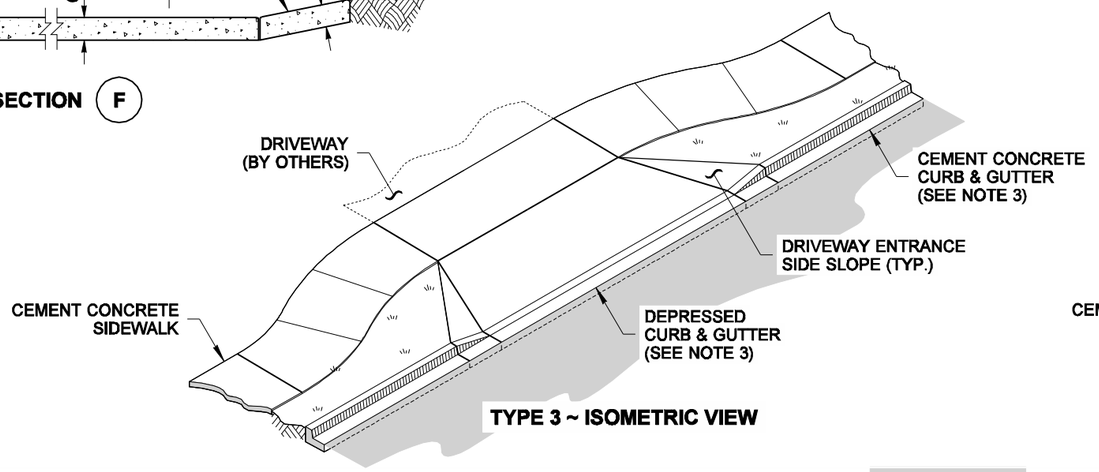

TYPE 3 ~ ISOMETRIC VIEW

DRAWN BY: MARK SUJKA

EFFECTIVE: APRIL 2, 2007 TO JANUARY 6, 2008

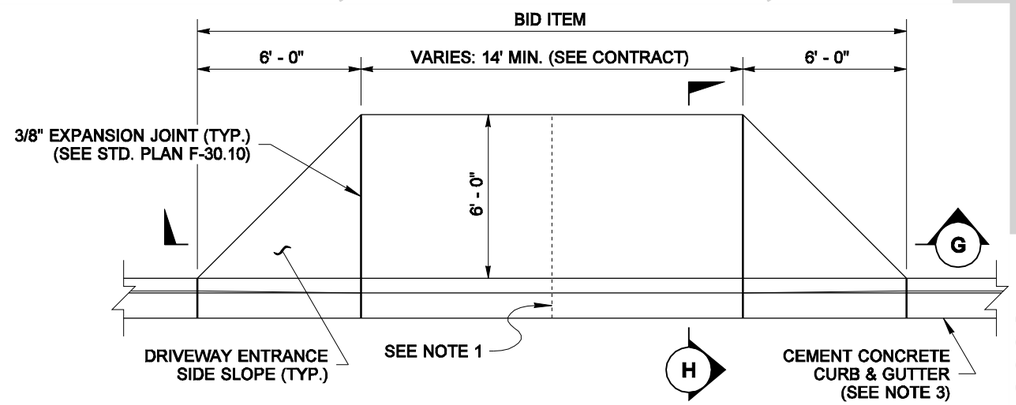

PLAN VIEW

CEMENT CONCRETE DRIVEWAY ENTRANCE TYPE 4

THIS ENTRANCE SHALL NOT BE USED ON AN **ADA** ACCESSIBLE PEDESTRIAN ROUTE

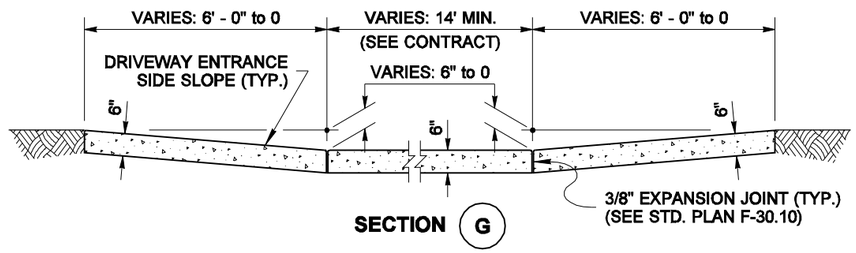

SECTION (G)

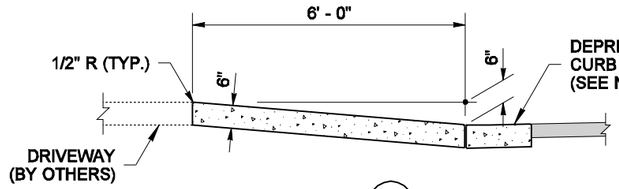

SECTION (H)

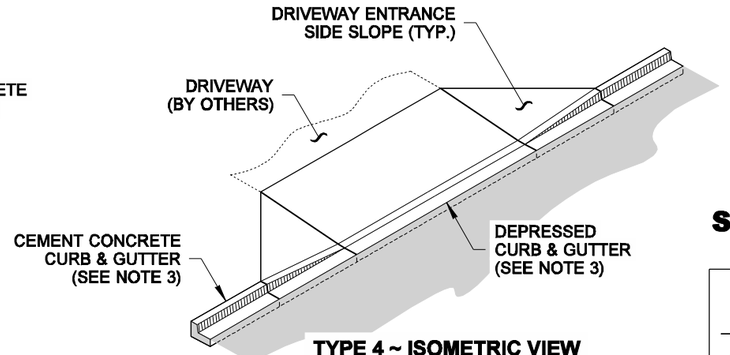

TYPE 4 ~ ISOMETRIC VIEW

KEN LEROY SMITH
STATE OF WASHINGTON
31805
REGISTERED
PROFESSIONAL ENGINEER

EXPIRES AUGUST 26, 2007

NOTE: THIS PLAN IS NOT A LEGAL ENGINEERING DOCUMENT BUT AN ELECTRONIC DUPLICATE. THE ORIGINAL, SIGNED BY THE ENGINEER AND APPROVED FOR PUBLICATION, IS KEPT ON FILE AT THE WASHINGTON STATE DEPARTMENT OF TRANSPORTATION. A COPY MAY BE OBTAINED UPON REQUEST.

CEMENT CONCRETE DRIVEWAY ENTRANCE TYPES 1, 2, 3 & 4

STANDARD PLAN F-80.10-00

SHEET 2 OF 2 SHEETS

APPROVED FOR PUBLICATION

Ken L. Smith — STATE DESIGN ENGINEER — *01-23-07* — DATE

Washington State Department of Transportation

EFFECTIVE: APRIL 2, 2007 TO JANUARY 6, 2008

EFFECTIVE: APRIL 2, 2007 TO JANUARY 6, 2008

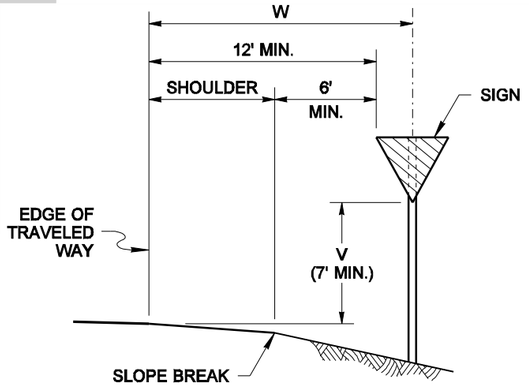

SIGN INSTALLATION IN FILL SECTION

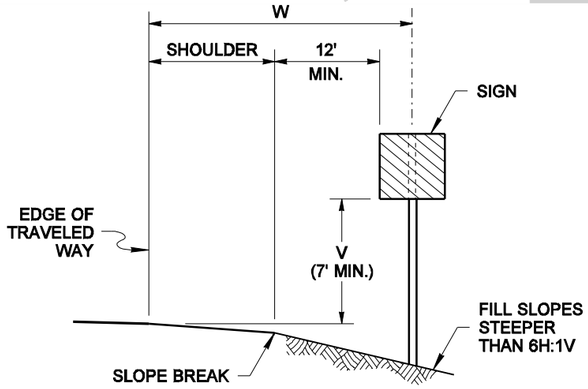

SIGN INSTALLATION ON STEEP FILL SLOPES

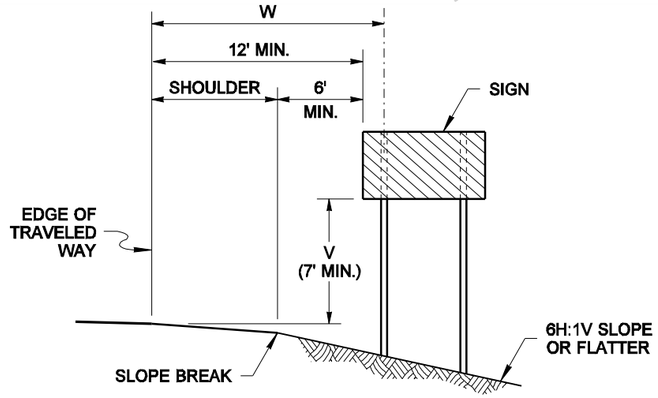

MULTIPLE SIGN POST INSTALLATION IN FILL SECTION

NOTES

1. Refer to the Sign Specification Sheet of the Contract for the 'V' and 'W' distances.
2. The minimum vertical distance from the bottom of the sign to the ground shall not be less than 7' for signs located within the Design Clear Zone.

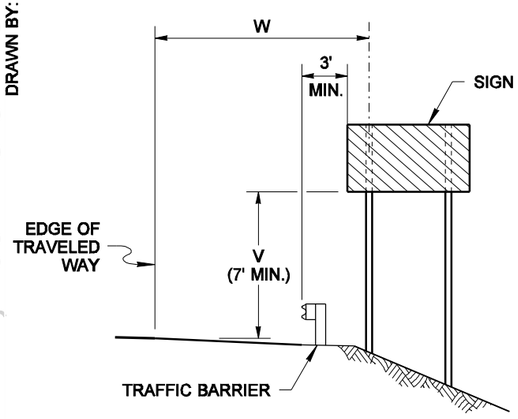

SIGN INSTALLATION BEHIND TRAFFIC BARRIER

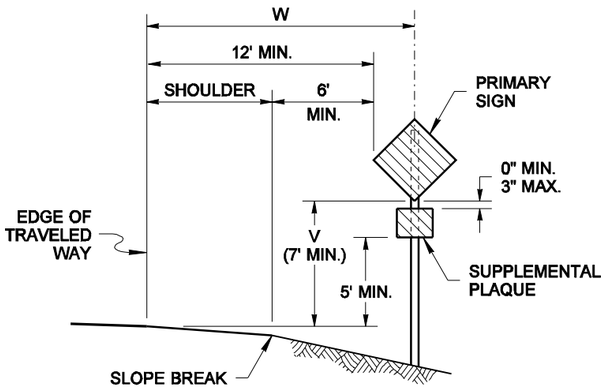

SIGN WITH SUPPLEMENTAL PLAQUE INSTALLATION IN FILL SECTION

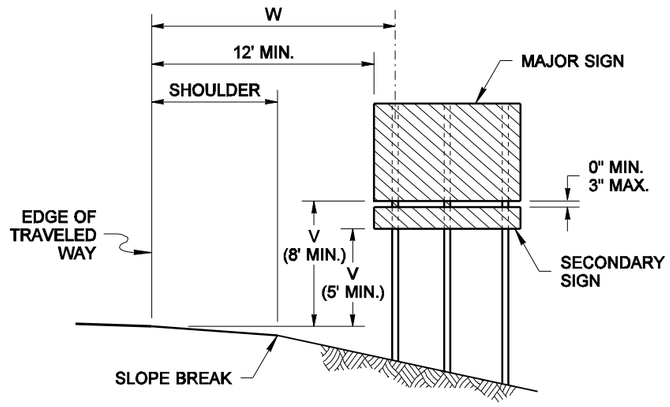

GUIDE OR DIRECTIONAL SIGN WITH SECONDARY SIGN INSTALLATION ON EXPRESSWAYS AND FREEWAYS

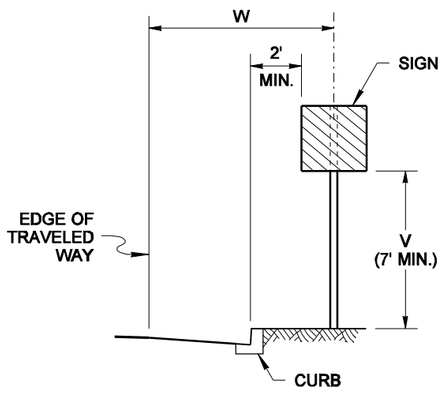

SIGN INSTALLATION IN CURB SECTION

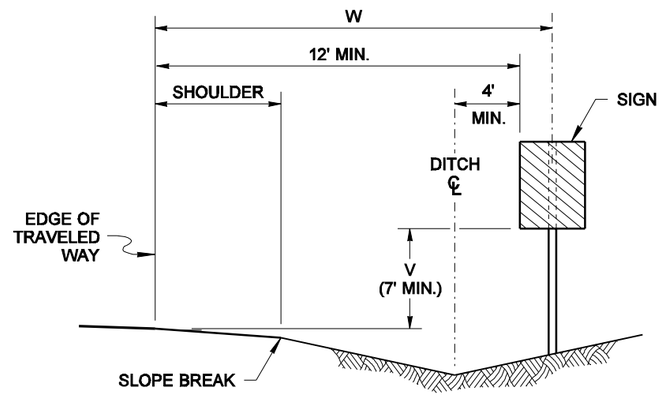

SIGN INSTALLATION IN DITCH SECTION

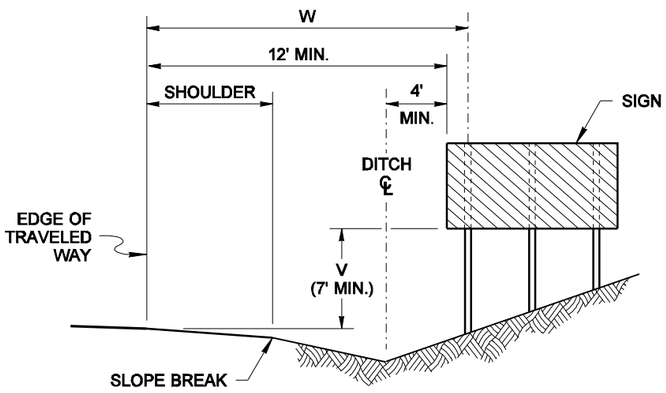

MULTIPLE SIGN POST INSTALLATION IN DITCH SECTION

THEODORE J. TREPANIER
STATE OF WASHINGTON
25335
REGISTERED
PROFESSIONAL ENGINEER

EXPIRES AUGUST 9, 2007

NOTE: THIS PLAN IS NOT A LEGAL ENGINEERING DOCUMENT BUT AN ELECTRONIC DUPLICATE. THE ORIGINAL, SIGNED BY THE ENGINEER AND APPROVED FOR PUBLICATION, IS KEPT ON FILE AT THE WASHINGTON STATE DEPARTMENT OF TRANSPORTATION. A COPY MAY BE OBTAINED UPON REQUEST.

GROUND MOUNTED SIGN PLACEMENT

STANDARD PLAN G-1

SHEET 1 OF 1 SHEET

APPROVED FOR PUBLICATION

Ken L. Smith — STATE DESIGN ENGINEER — *02-21-07* — DATE

Washington State Department of Transportation

DRAWN BY: MARK SUJKA

EFFECTIVE: APRIL 2, 2007 TO JANUARY 6, 2008

EFFECTIVE: APRIL 2, 2007 TO JANUARY 6, 2008

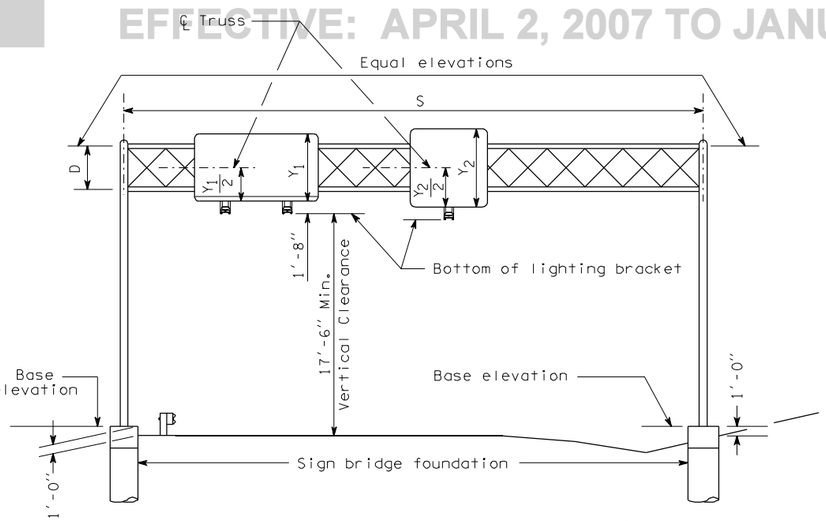

Y_1 = Height of shallowest sign on structure, D + 1' MIN

Y_2 = Height of any sign with height greater than Y_1

SIGN BRIDGE LAYOUT

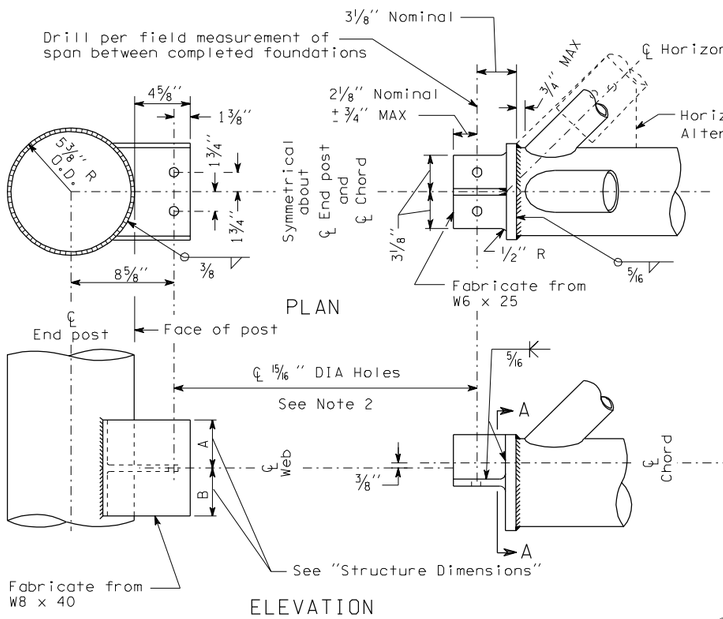

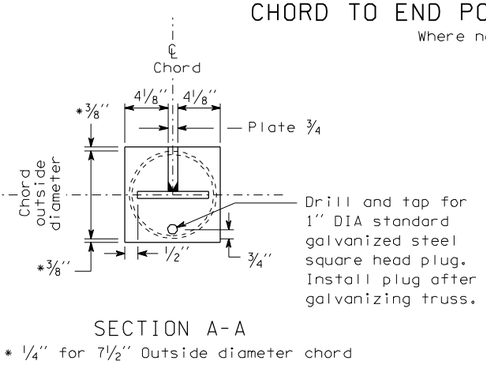

SECTION A-A

* ¼" for 7½" Outside diameter chord

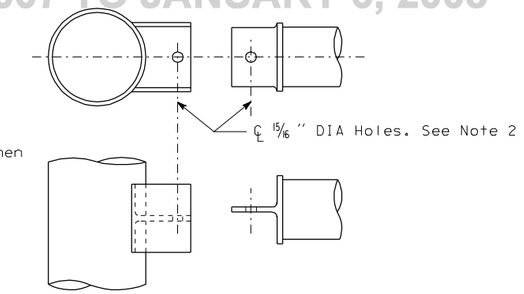

CHORD TO END POST CONNECTION TYPE Q

Where no diagonals connect
See Note 3

CHORD TO END POST CONNECTION TYPE R

Where diagonals connect

SPAN LENGTH S	DIMENSION D	TOP AND BOT CHORDS	DIAGONALS	END TRUSS POSTS	END TRUSS STRUTS AND DIAGONALS	TOTAL SIGN AREA (MAX)	A	B
60' or less	4'-0"	3" x .216"	1¼" x .140"	10" x .250"	2½" x .203"	384 sq ft	2⅜"	1⅝"
61' to 90'	5'-0"	4" x .237"	2" x .154"	10" x .250"	2½" x .203"	624 sq ft	2⅞"	2⅛"
91' to 120'	6'-0"	5" x .258"	2" x .154"	10" x .307"	3" x .216"	864 sq ft	3⅜"	2⅝"
121' to 150'	7'-0"	6" x .280"	2½" x .203"	10" x .365"	3½" x .226	1104 sq ft	4 1/16"	3¼"

All members are pipe. Values shown are nominal pipe size and wall thickness.

STRUCTURE DIMENSIONS

MATERIAL SPECIFICATIONS	
PIPE (Chords, Diagonals, Struts and Posts)	ASTM A 36 or ASTM A 53 Grade B, Type E or S, or A 500 Grade B
PLATES & SHAPES	ASTM A 36
BOLTS, NUTS, AND WASHERS	STD. SPEC. 9-06.5(3)
PIPE, PLATE & SHAPE GALVANIZING	AASHTO M 111
FASTENER GALVANIZING	AASHTO M 232

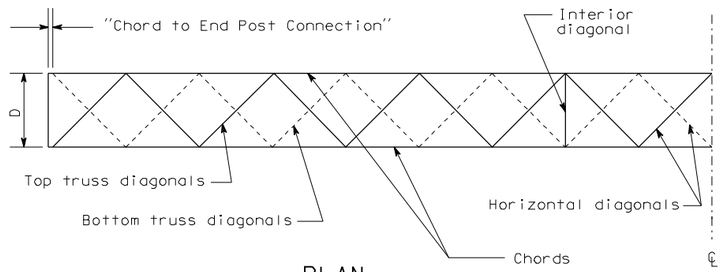

PLAN

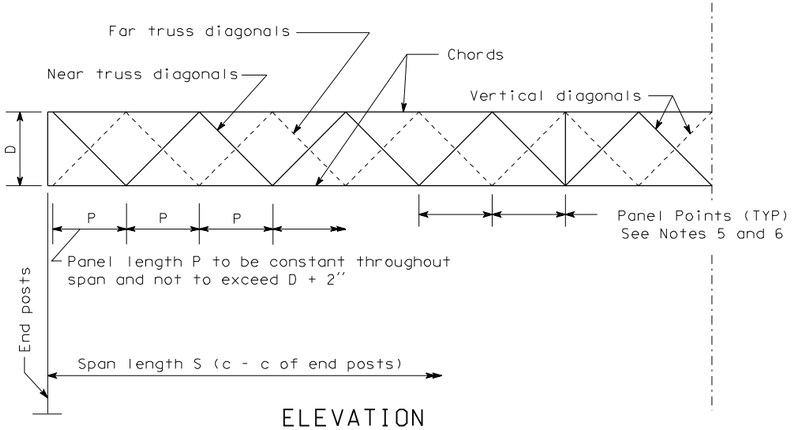

ELEVATION

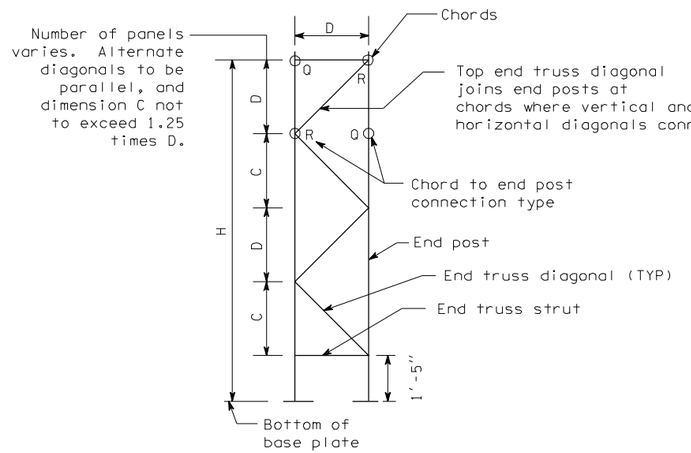

END VIEW

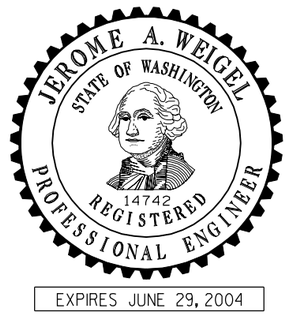

EXPIRES JUNE 29, 2004

NOTE: THIS PLAN IS NOT A LEGAL ENGINEERING DOCUMENT BUT AN ELECTRONIC DUPLICATE. THE ORIGINAL, SIGNED BY A REGISTERED ENGINEER AND APPROVED FOR PUBLICATION, IS ON FILE AT THE WASHINGTON STATE DEPARTMENT OF TRANSPORTATION. A COPY MAY BE OBTAINED UPON REQUEST.

SIGN BRIDGE STANDARD PLAN G-2

SHEET 1 OF 3 SHEETS

APPROVED FOR PUBLICATION

Harold J. Peterfeso — STATE DESIGN ENGINEER — *06-04-02* DATE

Washington State Department of Transportation

DATE	REVISION	BY
03/2002	ADDED MATERIALS SPECIFICATIONS	MAS

EFFECTIVE: APRIL 2, 2007 TO JANUARY 6, 2008

EFFECTIVE: APRIL 2, 2007 TO JANUARY 6, 2008

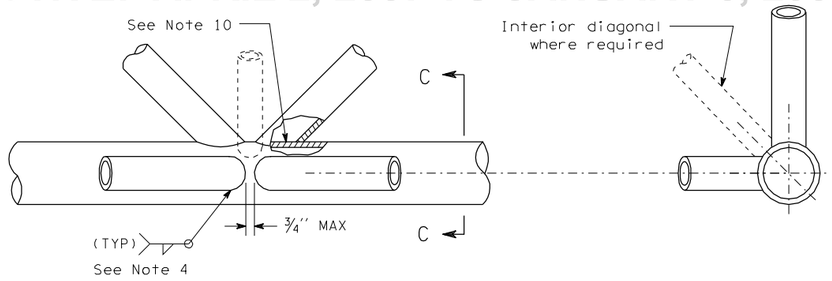

PLAN

SECTION C-C

TYPICAL JOINT DETAIL

Chord shown - End Post Similar

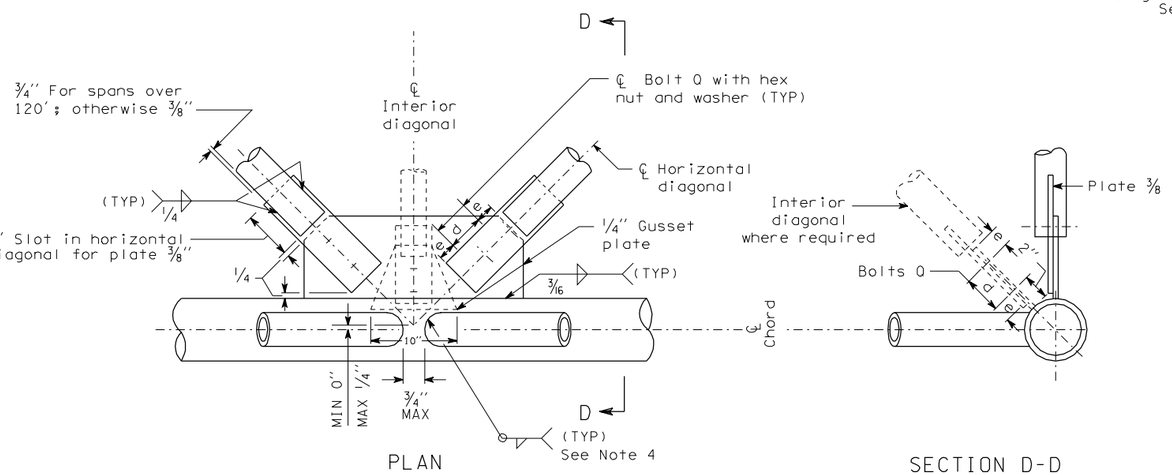

PLAN

SECTION D-D

ALTERNATE JOINT DETAIL

Not for connections between vertical diagonals and chords.

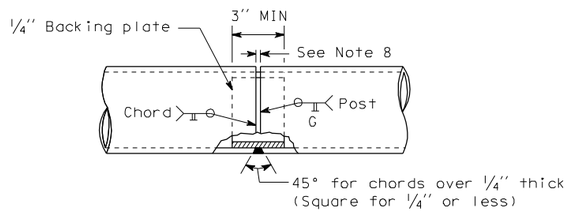

END POST OR CHORD SHOP SPLICE

See Note 9

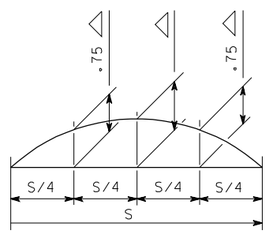

For span lengths not listed, interpolate values of △.

Fabricate truss with chords curved to provide camber. Do not camber by using shims between chord at splices.

DEAD LOAD CAMBER

SPAN LENGTH S(ft)	△ - (in)
40'	1/2
50'	3/4
60'	7/8
61'	7/8
70'	1
80'	1 1/4
90'	1 1/2
91'	1 3/8
100'	1 5/8
110'	2
120'	2 3/8
121'	2 1/8
130'	2 1/2
140'	2 7/8
150'	3 3/8

EFFECTIVE: APRIL 2, 2007 TO JANUARY 6, 2008

SPAN LENGTH	F	T	K
60' or less	6"	3/4"	1/2"
61' to 90'	7"	7/8"	5/8"
91' to 120'	8 1/2"	1"	3/4"
121' to 150'	9 1/2"	1 1/4"	7/8"

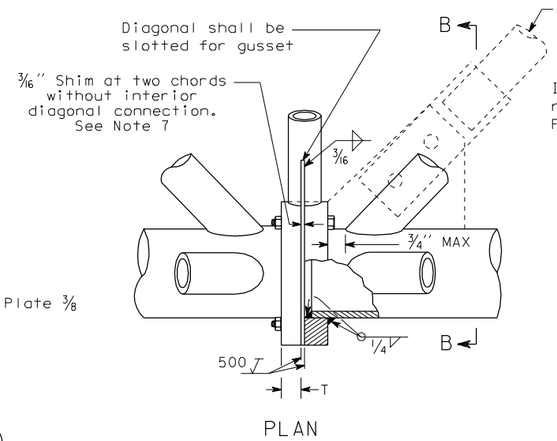

PLAN

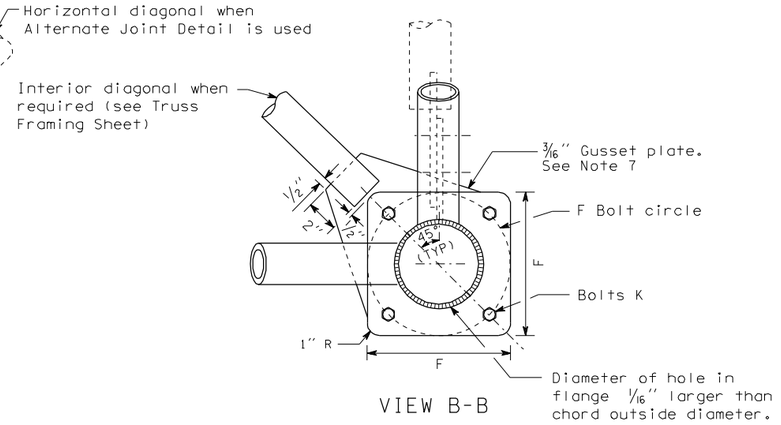

VIEW B-B

CHORD FIELD SPLICE

(NO CHORD FIELD SPLICE PERMITTED IN MIDDLE THIRD OF SPAN LENGTH)

SPAN LENGTH	ALTERNATE JOINT DETAIL DATA		
	e	d	BOLT Q DIAMETER
60' or less	1 1/4"	2 1/2"	3/4"
61' to 90'	1 1/2"	3"	7/8"
91' to 120'	1 1/2"	3"	7/8"
121' to 150'	1 3/4"	3 1/2"	1"

JEROME A. WEIGEL
STATE OF WASHINGTON
14742
REGISTERED
PROFESSIONAL ENGINEER

EXPIRES JUNE 29, 2004

NOTE: THIS PLAN IS NOT A LEGAL ENGINEERING DOCUMENT BUT AN ELECTRONIC DUPLICATE. THE ORIGINAL, SIGNED BY THE ENGINEER AND APPROVED FOR PUBLICATION, IS KEPT ON FILE AT THE WASHINGTON STATE DEPARTMENT OF TRANSPORTATION. A COPY MAY BE OBTAINED UPON REQUEST.

SIGN BRIDGE
STANDARD PLAN G-2

SHEET 2 OF 3 SHEETS

APPROVED FOR PUBLICATION

Harold J. Peterfeso — STATE DESIGN ENGINEER — *06-04-02* DATE

Washington State Department of Transportation

DATE	REVISION	BY
03/2002	CORRECTED WELDING SYMBOL	MAS

EFFECTIVE: APRIL 2, 2007 TO JANUARY 6, 2008

EFFECTIVE: APRIL 2, 2007 TO JANUARY 6, 2008

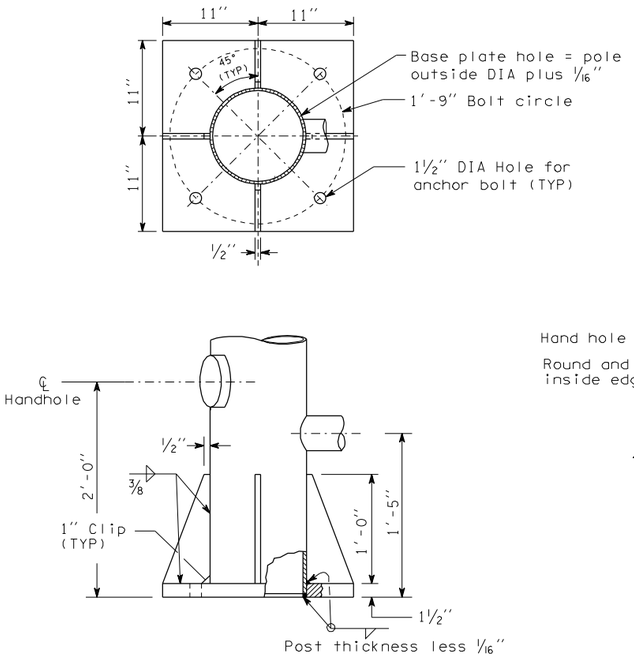

END POST BASE WITH HANDHOLE LOCATION

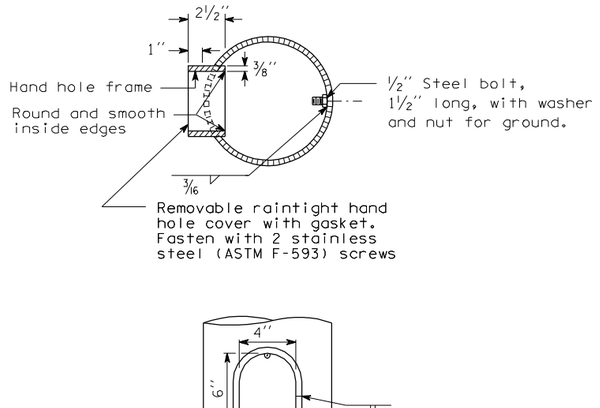

HANDHOLE DETAIL

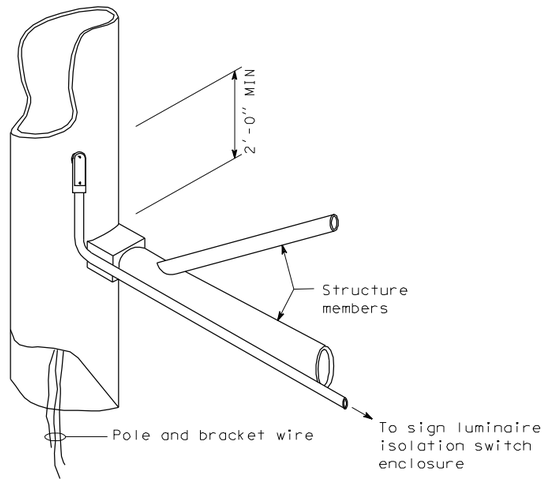

CONDUIT PLACEMENT

NOTES

1. Horizontal and vertical clearance requirements shall be as shown in Contract Plans.
2. Assemble with ⅞'' Diameter bolts. Install bolts with head upward. Exclude bolt threading from grip.
3. Details not shown are same as Chord to End Post Connection Type R, omitting the ¾'' plate stiffener on the tee member.
4. Ends of diagonals shall be cut to fit neatly against chord or post. Fillet weld size to be diagonal tube or pipe thickness plus 1/16''.
5. Horizontal diagonals must join chords where vertical diagonals connect (panel points).
6. Interior diagonals shall be placed at panel points, 40' maximum spacing. Locate symmetrically about centerline of span if possible. An interior diagonal is not required at span ends.
7. Omit gussets or shims where interior diagonals are not required at chord field splice.
8. Dimension shall equal chord thickness or ¼'', whichever is less.
9. No post splices permitted in lower third of height, nor closer than 3'-0'' to bottom of chord. No chord shop splices permitted in middle third of span. Maximum of one splice in each end post.
10. Drill hole in chord at each diagonal and strut. Diameter shall be 1'' for spans over 60'. For spans 60' or less, diameter shall be ¾''.

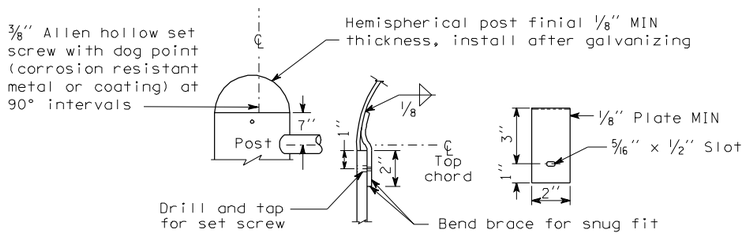

FINIAL DETAIL

JEROME A. WEIGEL
STATE OF WASHINGTON
14742
REGISTERED
PROFESSIONAL ENGINEER

EXPIRES JUNE 29, 2004

NOTE: THIS PLAN IS NOT A LEGAL ENGINEERING DOCUMENT BUT AN ELECTRONIC DUPLICATE. THE ORIGINAL, SIGNED BY THE ENGINEER AND APPROVED FOR PUBLICATION, IS KEPT ON FILE AT THE WASHINGTON STATE DEPARTMENT OF TRANSPORTATION. A COPY MAY BE OBTAINED UPON REQUEST.

SIGN BRIDGE
STANDARD PLAN G-2

SHEET 3 OF 3 SHEETS

APPROVED FOR PUBLICATION

Harold J. Peterfeso — STATE DESIGN ENGINEER — *06-04-02* DATE

Washington State Department of Transportation

DATE	REVISION	BY
03/2002	DELETED BALLAST BOX AND ATTACHMENT DETAILS	MAS

EFFECTIVE: APRIL 2, 2007 TO JANUARY 6, 2008

EFFECTIVE: APRIL 2, 2007 TO JANUARY 6, 2008

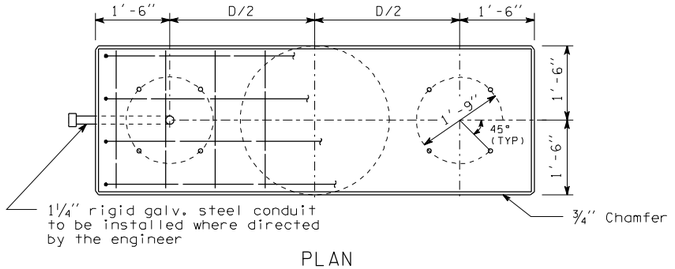

PLAN

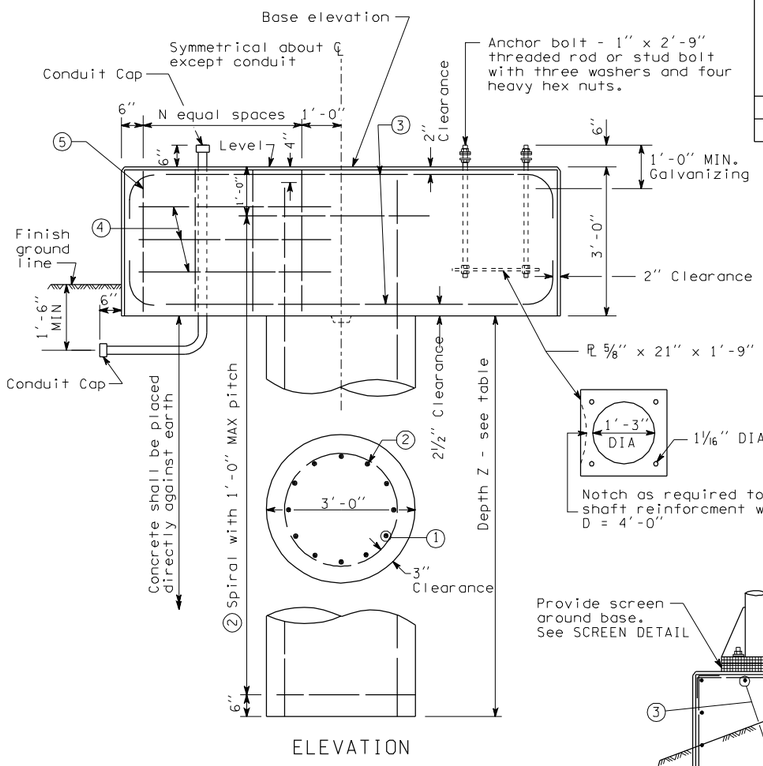

ELEVATION

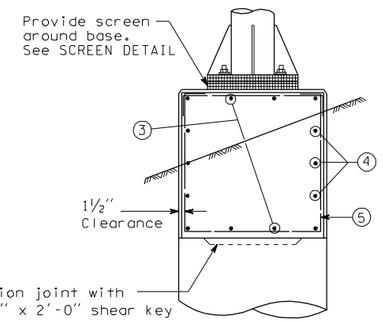

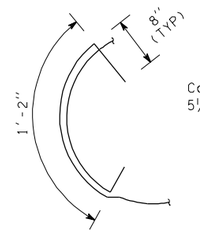

BAR ② #4 LAP SPLICE DETAIL

Note:

End posts shall be erected on a true vertical. Plumbing shall be accomplished by adjustment of the nuts located in the base. After plumbing, tighten upper nut on anchor bolt ¼ turn min. to 1/3 turn max. past snug tight.

FOUNDATION - TYPE 1

BAR LIST

Number of bars listed is for one foundation only. Dimensions are out to out.

Foundation Type	Mark	Location	Span Length 60' or less No	Size	61' to 90' No	Size	91' to 120' No	Size	120' to 150' No	Size	Bending Diagram
1	1	Shaft - vertical	11	9	14	11	18	11	23	11	Str
	2	Shaft - spiral	*	4	*	4	*	4	*	4	
	3	Cap-Top and bottom	8	6	8	7	10	8	12	8	
	4	Cap - sides	6	4	6	4	6	4	6	4	Str
	5	Cap - hoops	6	4	8	4	14	4	22	4	
2 and 3	6	Cap - top	4	6	4	7	5	8	6	8	
	7	Cap - sides	14	4	16	4	18	4	18	4	Str
	8	Cap - hoops	6	4	8	4	14	4	22	4	
	9	Cap - bottom	8	6	8	7	10	8	12	8	
	10	Fnd wall vertical	30	6	42	6	42	7	50	7	Str
	11	Fnd wall ties	8	5	8	5	8	5	8	5	
	12	Fnd wall horizontal	4	5	4	5	4	5	4	5	Str
2	13	Fnd wall horizontal	8	5	8	5	10	5	12	5	
3	13	Fnd wall horizontal	10	5	12	5	14	5	16	5	

NOTE: See contract plans for type of foundation to be used.

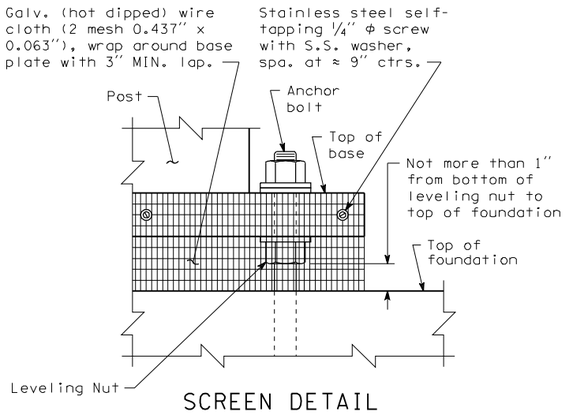

SCREEN DETAIL

Foundation Type	Span Length: Length	60' or less	61' to 90'	91' to 120'	121' to 150'
All	D	4'-0"	5'-0"	6'-0"	7'-0"
	N	2	3	6	10
1	Z	11'-6"	13'-6"	15'-0"	16'-6"
2	Z	5'-6"	6'-6"	7'-6"	8'-6"
3	Z	7'-0"	8'-6"	10'-0"	11'-6"

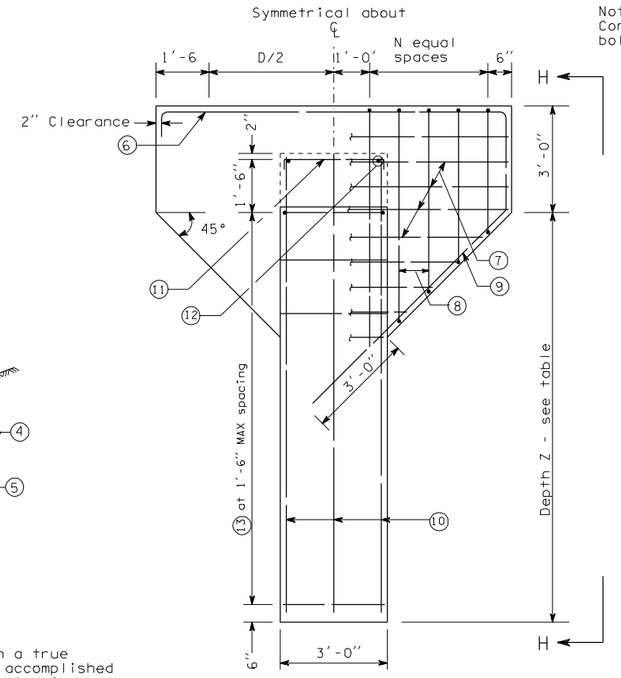

ELEVATION

Note:
Conduit and anchor bolts same as Type 1

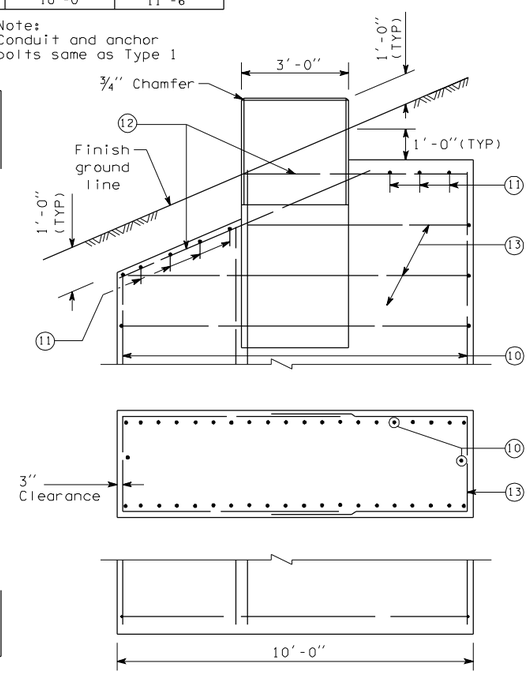

VIEW H-H

FOUNDATION - TYPES 2 AND 3

MATERIAL SPECIFICATIONS	
SHAFT CONCRETE	Class 4000P or Class 4000W
ALL OTHER CONCRETE	CLASS 4000
STEEL REINF. BAR	AASHTO M 31
ANCHOR RODS	ASTM F 1554 GRADE 105
ANCHOR NUTS	AASHTO M 291
ANCHOR WASHERS	AASHTO M 291
ANCHOR BOLTS, NUTS, AND WASHERS	STD. SPEC. 9-06.5(4)
ANCHORAGE GALVANIZING	AASHTO M 232
STEEL TEMPLATE	ASTM A 36

JEROME A. WEIGEL
STATE OF WASHINGTON
14742
REGISTERED
PROFESSIONAL ENGINEER

EXPIRES JUNE 29, 2004

NOTE: THIS PLAN IS NOT A LEGAL ENGINEERING DOCUMENT BUT AN ELECTRONIC DUPLICATE. THE ORIGINAL, SIGNED BY THE ENGINEER AND APPROVED FOR PUBLICATION, IS KEPT ON FILE AT THE WASHINGTON STATE DEPARTMENT OF TRANSPORTATION. A COPY MAY BE OBTAINED UPON REQUEST.

SIGN BRIDGE FOUNDATIONS

STANDARD PLAN G-2a

SHEET 1 OF 1 SHEET

APPROVED FOR PUBLICATION

Harold J. Peterfeso *06-04-02*

STATE DESIGN ENGINEER — DATE

Washington State Department of Transportation

DATE	REVISION	BY
03/2002	ADDED MATERIALS SPECIFICATIONS AND SCREEN DETAIL	MAS

SIGN BRIDGE FOUNDATIONS

EFFECTIVE: APRIL 2, 2007 TO JANUARY 6, 2008

EFFECTIVE: APRIL 2, 2007 TO JANUARY 6, 2008

DRAWN BY: BILL BERENS

POST SELECTION		
TOTAL SIGN AREA ◇1 Σ (X TIMES Y) (FT^2)	POST SIZE	
	O.D.	WALL
50 OR LESS	18"	0.438"
50+ to 100	18"	0.438"
100+ to 150	24"	0.375"
150+ to 200	24"	0.375"
200+ to 250	24"	0.375"
250+ to 300	24"	0.375"
300+ to 350	24"	0.438"
350+ to 400	24"	0.500"

SINGLE OR DOUBLE CANTILEVER

DOUBLE CANTILEVER ONLY

◇1 SUM OF SIGN FOR DOUBLE CANTILEVER

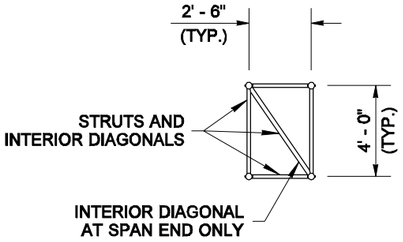

END

ALL TRUSS DIAGONALS AND STRUTS SHALL BE 1 1/2" PIPE (0.145" WALL)

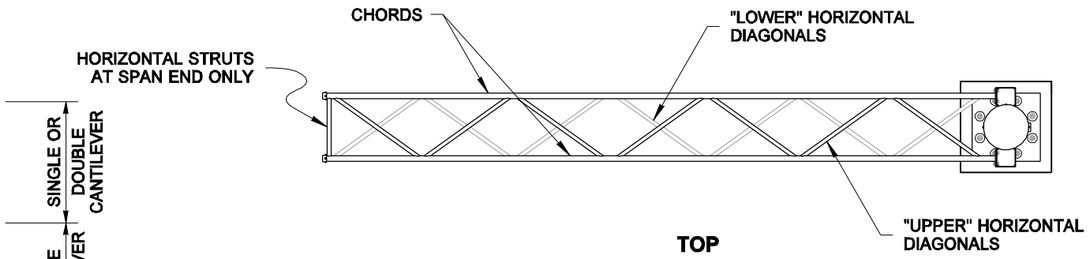

TOP

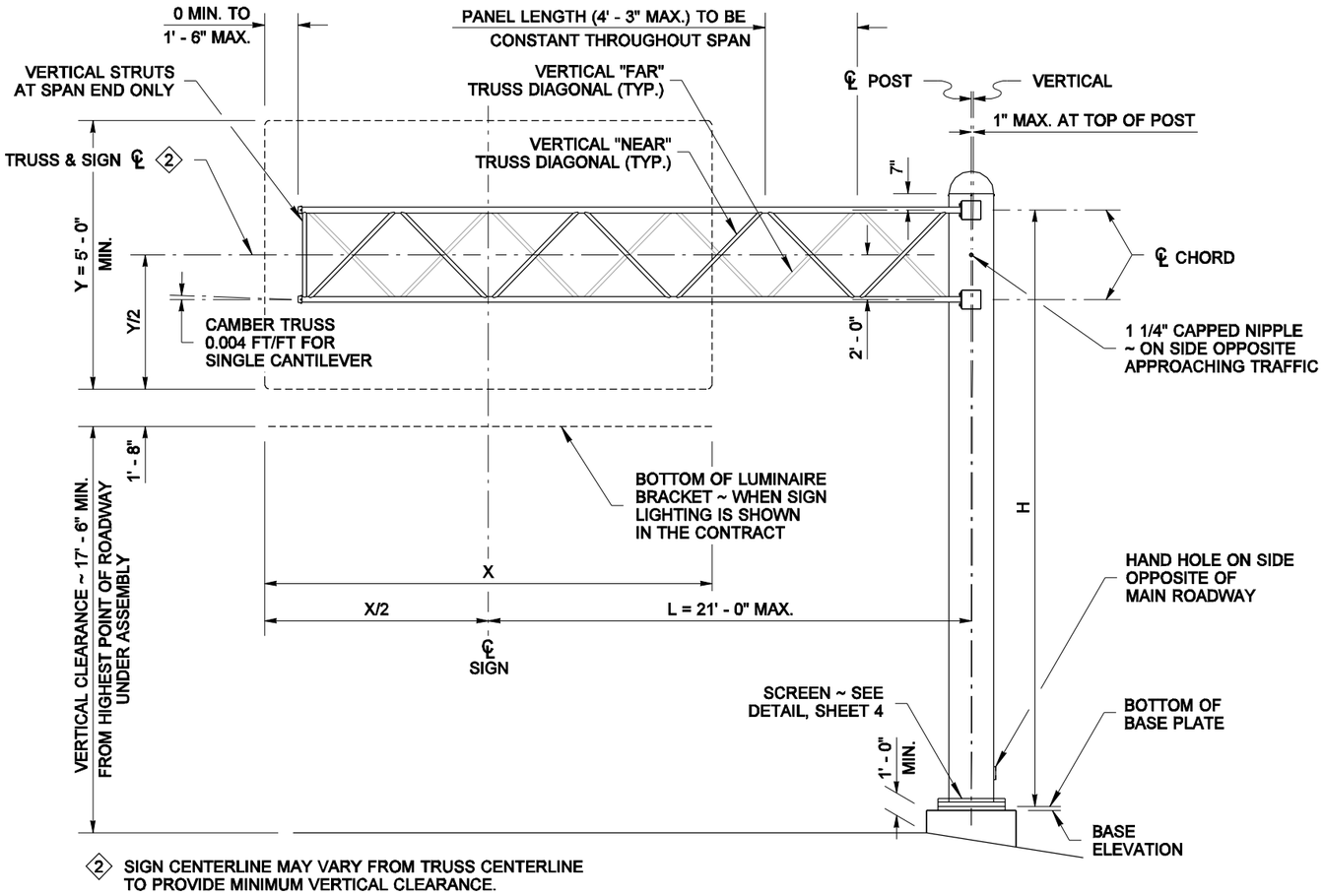

◇2 SIGN CENTERLINE MAY VARY FROM TRUSS CENTERLINE TO PROVIDE MINIMUM VERTICAL CLEARANCE.

ELEVATION

SINGLE CANTILEVER SIGN STRUCTURE

MATERIAL SPECIFICATIONS	
PIPE (CHORDS, DIAGONALS, STRUTS AND POSTS)	ASTM A 36 OR ASTM A 53 GRADE B, TYPE E OR S, OR A 500 GRADE B
PLATES	ASTM A 36
SHAPES	ASTM A 36 ASTM A 992
BOLTS, NUTS, & WASHERS	STD. SPEC. 9-06.5(3)
PIPE, PLATE & SHAPE GALVANIZING	AASHTO M 111
FASTENER GALVANIZING	AASHTO M 232

CHORD SELECTION		
SIGN AREA (X TIMES Y) (FT^2)	CHORD SIZE	
	NOM. DIAM.	WALL
50 OR LESS	2"	0.154"
50+ TO 100	2"	0.218"
100+ TO 150	2 1/2"	0.203"
150+ TO 200	3"	0.216"

NOTES

1. Vertical and horizontal clearance requirements shall be as shown on the contract plans.
2. No post splices permitted in lower third of height, nor closer than 3' - 0" to bottom chord, except as otherwise noted. No chord shop splices permitted in first two-thirds of the span, except as otherwise noted. A maximum of two splices are permitted in the post. For post or chord shop splice details, see Standard Plan G-2.
3. The back-up plates or rings for all full penetration welds shall be welded continuously to the joined pieces. This can be done by either a continuous fillet weld on the back side of the piece, or by a continuous weld in the root of the full penetration weld.
4. All bolt holes shall be drilled, and the diameter shall be 1/16" larger than the nominal bolt diameter, except as noted.
5. The design and analysis of the structures has been done in accordance with AASHTO Standard Specification for Structural Supports for Highway Signs, Luminaires and Traffic Signals Dated 2001, using 90 MPH wind velocity and fatigue category - I.
6. Adjust post alignment in plane normal to roadway center line by means of leveling nuts located below base plate to maintain upward slope in cantilever arm(s). Tighten anchor nuts above base plate in accordance with Standard Specification 6-03.3(33).
7. Variable Message Signs (VMS) exceeding 700 lbs. and/or 200 sq. ft. shall not be installed on cantilever structure.

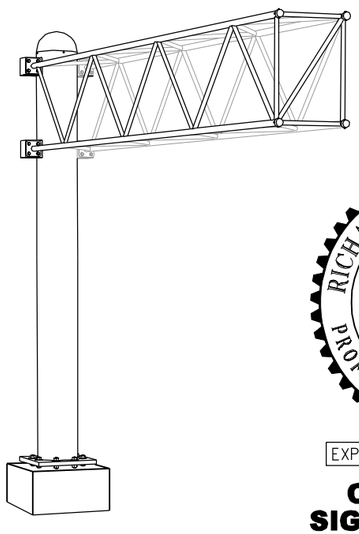

PERSPECTIVE

RICHARD P. ZELDENRUST
STATE OF WASHINGTON
25470
REGISTERED
PROFESSIONAL ENGINEER

EXPIRES NOVEMBER 14, 2006

NOTE: THIS PLAN IS NOT A LEGAL ENGINEERING DOCUMENT BUT AN ELECTRONIC DUPLICATE. THE ORIGINAL, SIGNED BY THE ENGINEER AND APPROVED FOR PUBLICATION, IS KEPT ON FILE AT THE WASHINGTON STATE DEPARTMENT OF TRANSPORTATION. A COPY MAY BE OBTAINED UPON REQUEST.

CANTILEVER SIGN STRUCTURE (TRUSS-TYPE) STANDARD PLAN G-3

SHEET 1 OF 4 SHEETS

APPROVED FOR PUBLICATION

Harold J. Peterfeso — STATE DESIGN ENGINEER — *11-09-05* — DATE

Washington State Department of Transportation

EFFECTIVE: APRIL 2, 2007 TO JANUARY 6, 2008

EFFECTIVE: APRIL 2, 2007 TO JANUARY 6, 2008
EFFECTIVE: APRIL 2, 2007 TO JANUARY 6, 2008

DRAWN BY: BILL BERENS

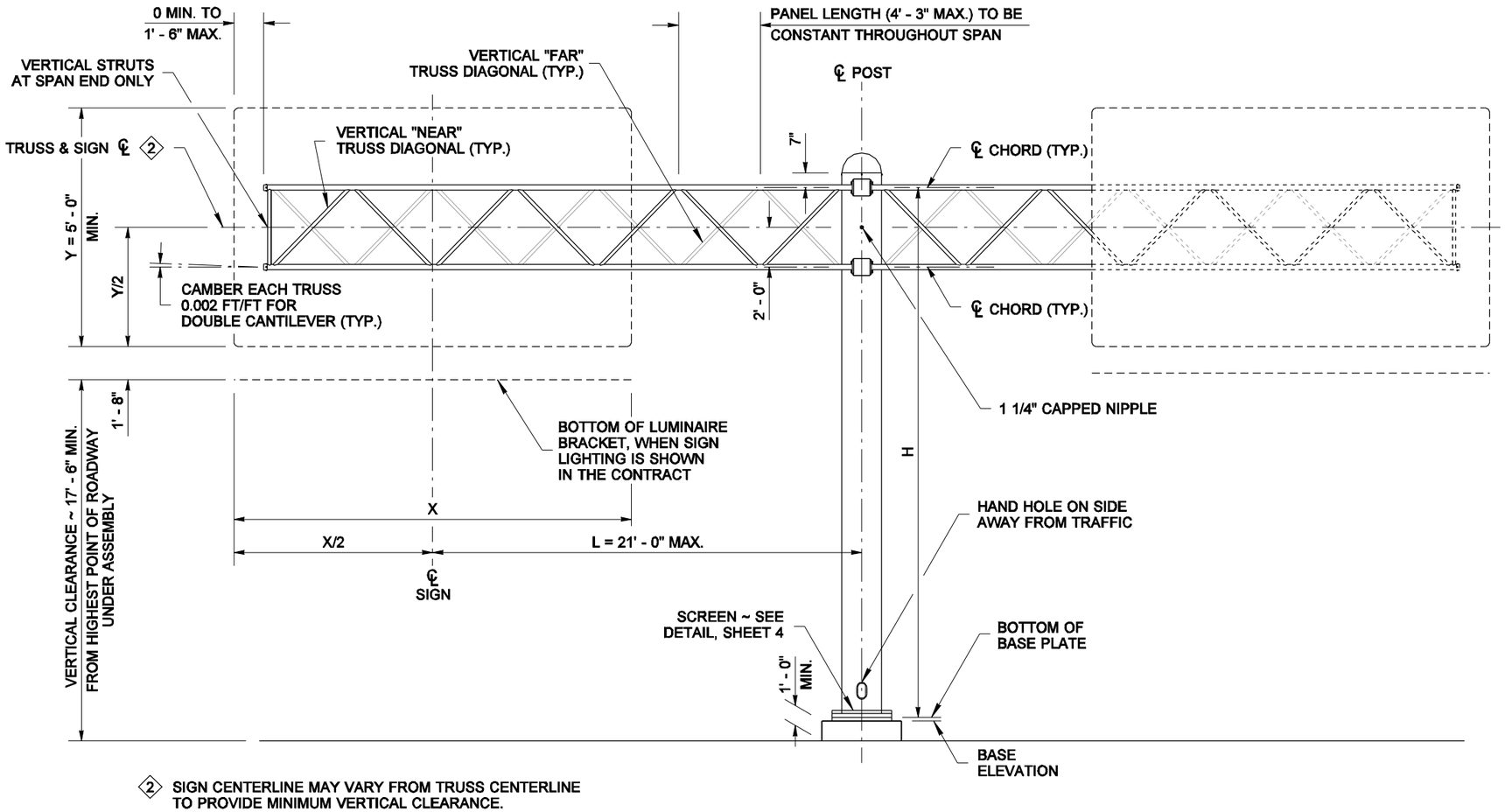

2 SIGN CENTERLINE MAY VARY FROM TRUSS CENTERLINE TO PROVIDE MINIMUM VERTICAL CLEARANCE.

ELEVATION

DOUBLE CANTILEVER SIGN STRUCTURE

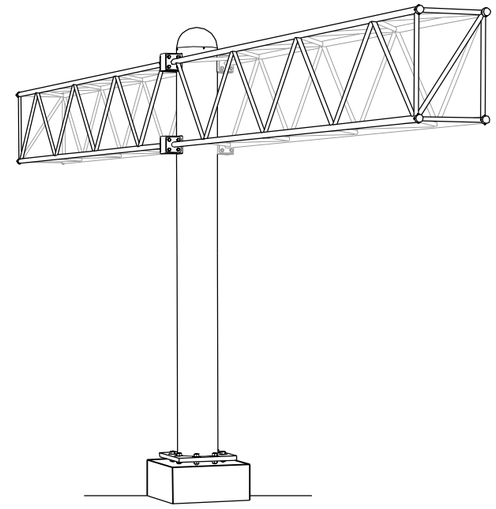

PERSPECTIVE



EXPIRES NOVEMBER 14, 2006

NOTE: THIS PLAN IS NOT A LEGAL ENGINEERING DOCUMENT BUT AN ELECTRONIC DUPLICATE. THE ORIGINAL, SIGNED BY THE ENGINEER AND APPROVED FOR PUBLICATION, IS KEPT ON FILE AT THE WASHINGTON STATE DEPARTMENT OF TRANSPORTATION. A COPY MAY BE OBTAINED UPON REQUEST.

CANTILEVER SIGN STRUCTURE (TRUSS-TYPE) STANDARD PLAN G-3

SHEET 2 OF 4 SHEETS

APPROVED FOR PUBLICATION

Harold J. Peterfeso — STATE DESIGN ENGINEER

11-09-05 — DATE

Washington State Department of Transportation

EFFECTIVE: APRIL 2, 2007 TO JANUARY 6, 2008
EFFECTIVE: APRIL 2, 2007 TO JANUARY 6, 2008

EFFECTIVE: APRIL 2, 2007 TO JANUARY 6, 2008

DRAWN BY: BILL BERENS

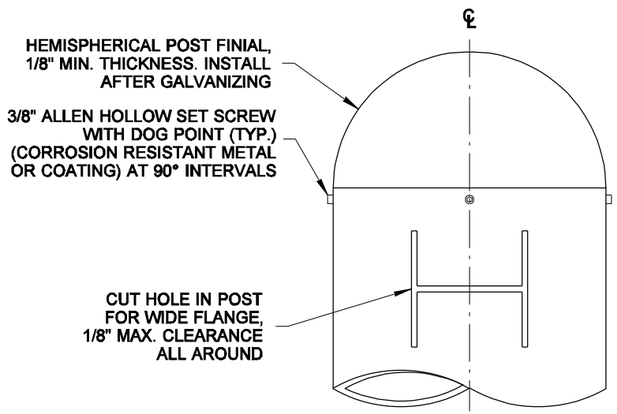

ELEVATION
ROTATED 90° TO SHOW CUTOUT

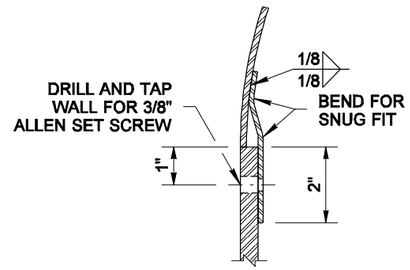

SECTION THROUGH FINIAL AND POST

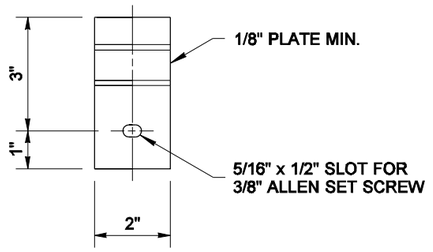

FINIAL BRACKET

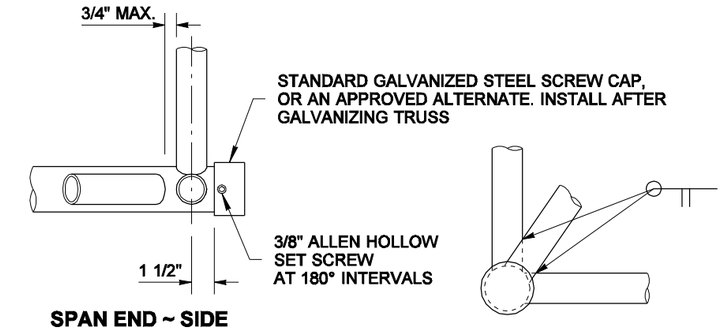

SPAN END ~ SIDE

SPAN END ~ END
OPPOSITE HAND SHOWN FOR CLARITY

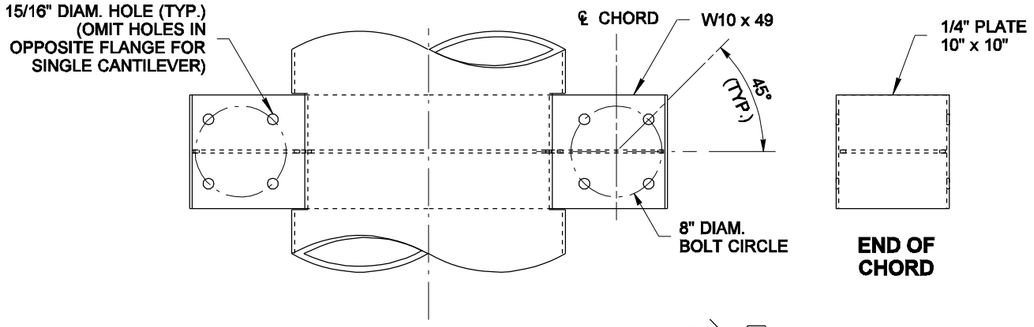

ELEVATION

END OF CHORD

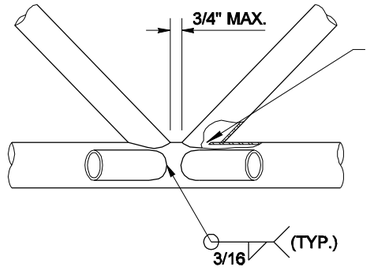

3/4" DIAM. HOLE IN CHORD AT EACH END OF ALL DIAGONAL CHORDS AND STRUTS

DIAGONAL CONNECTION DETAIL
TYPICAL OF ALL DIAGONALS

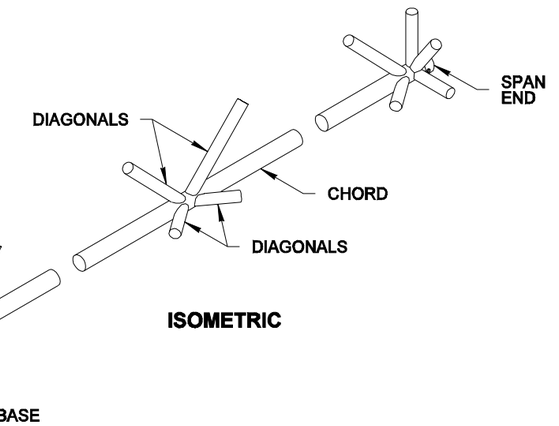

ISOMETRIC

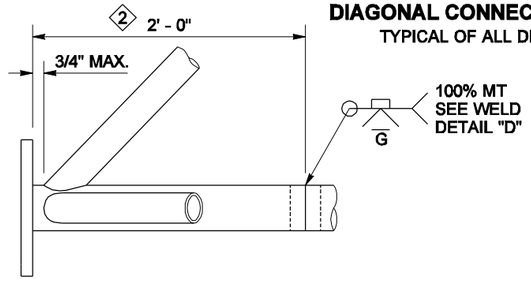

BASE ~ SIDE

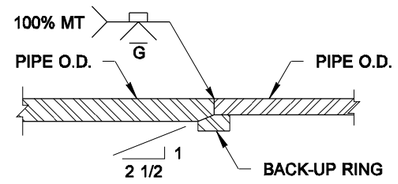

DETAIL "D"

2 3" DIAM. PIPE (t = 0.300) SPLICE WITH 3" DIAM. PIPE (t = 0.216) (SEE CHORD SELECTION TABLE)
2 1/2" DIAM. PIPE (t = 0.276) SPLICE WITH 2 1/2" DIAM. PIPE (t = 0.203) (SEE CHORD SELECTION TABLE)

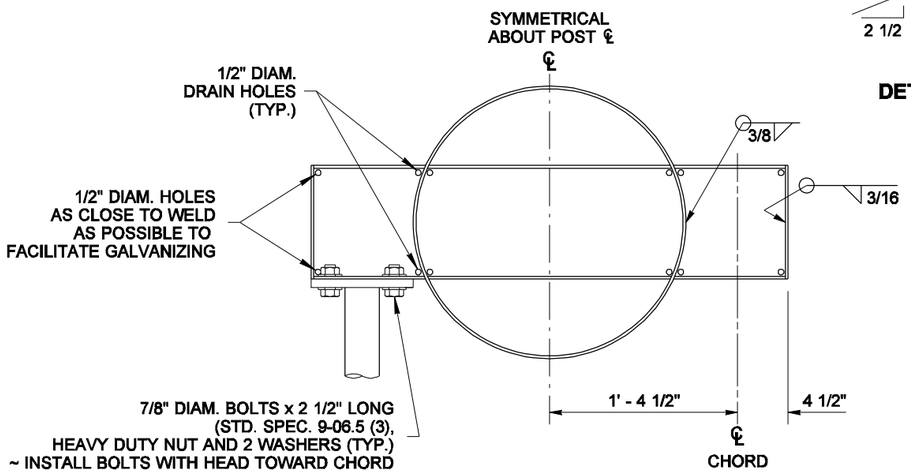

TOP

CHORD TO POST CONNECTION DETAIL

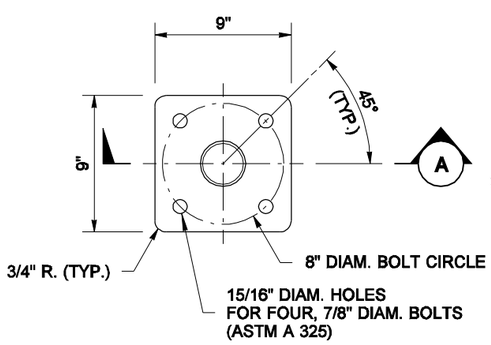

BASE ~ TOP

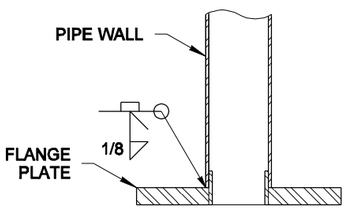

SECTION (A)

TYPICAL TRUSS DETAILS
ENDS OF DIAGONALS SHALL BE CUT TO FIT NEATLY AGAINST CHORDS

RICHARD P. ZELDENRUST
STATE OF WASHINGTON
25470
REGISTERED
PROFESSIONAL ENGINEER

EXPIRES NOVEMBER 14, 2006

NOTE: THIS PLAN IS NOT A LEGAL ENGINEERING DOCUMENT BUT AN ELECTRONIC DUPLICATE. THE ORIGINAL, SIGNED BY THE ENGINEER AND APPROVED FOR PUBLICATION, IS KEPT ON FILE AT THE WASHINGTON STATE DEPARTMENT OF TRANSPORTATION. A COPY MAY BE OBTAINED UPON REQUEST.

CANTILEVER SIGN STRUCTURE (TRUSS-TYPE) STANDARD PLAN G-3

SHEET 3 OF 4 SHEETS

APPROVED FOR PUBLICATION

Harold J. Peterfeso — STATE DESIGN ENGINEER — *11-09-05* — DATE

Washington State Department of Transportation

EFFECTIVE: APRIL 2, 2007 TO JANUARY 6, 2008

EFFECTIVE: APRIL 2, 2007 TO JANUARY 6, 2008

DRAWN BY: BILL BERENS

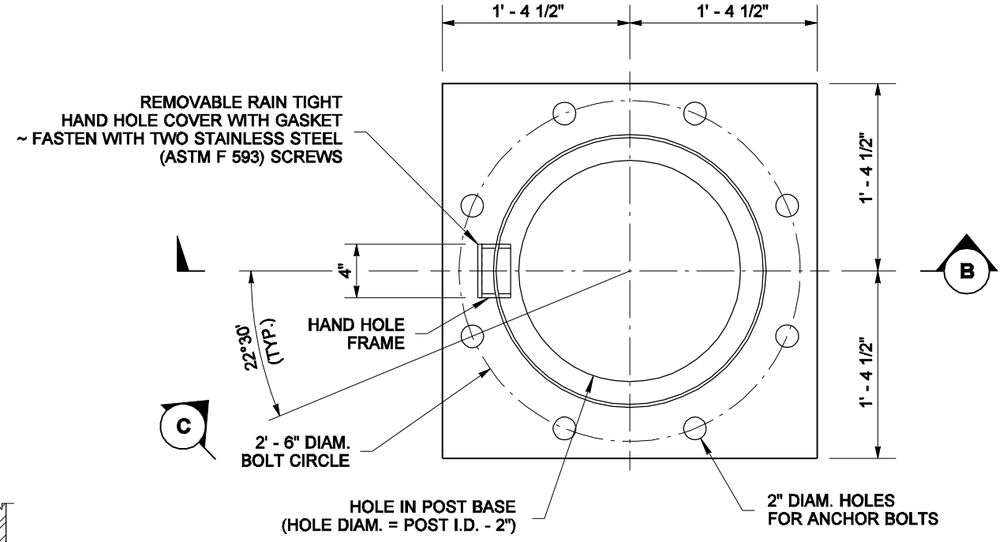

TOP

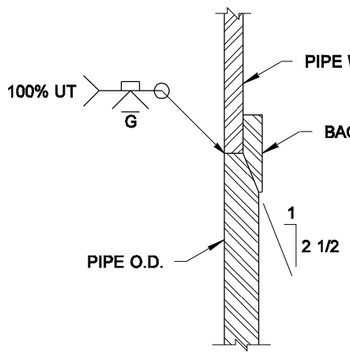

DETAIL "G"

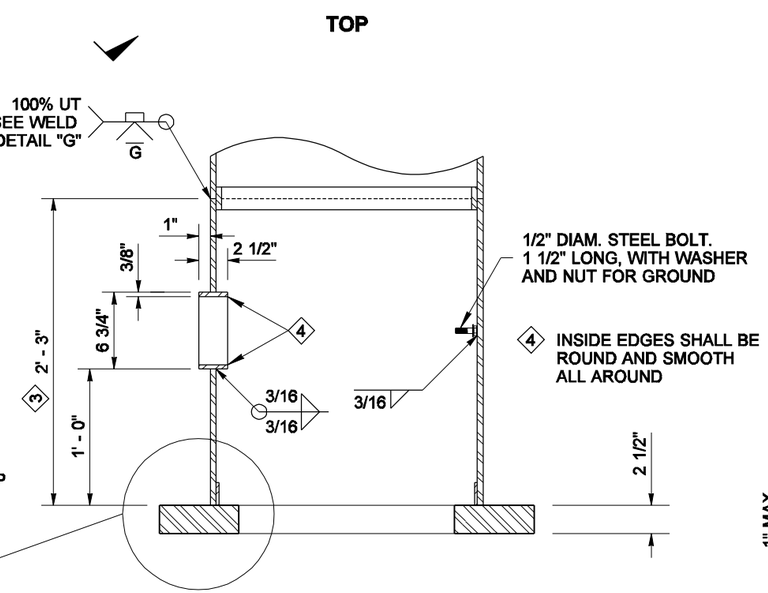

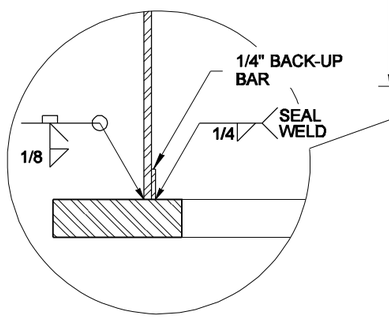

BASE WELD DETAIL

SECTION (B)

3 24" O.D. PIPE (t = 0.969) SPLICE WITH
24" O.D. UPPER POST (SEE POST SELECTION TABLE)
18" O.D. PIPE (t = 0.750) SPLICE WITH
18" O.D. UPPER POST (SEE POST SELECTION TABLE)

POST BASE DETAILS

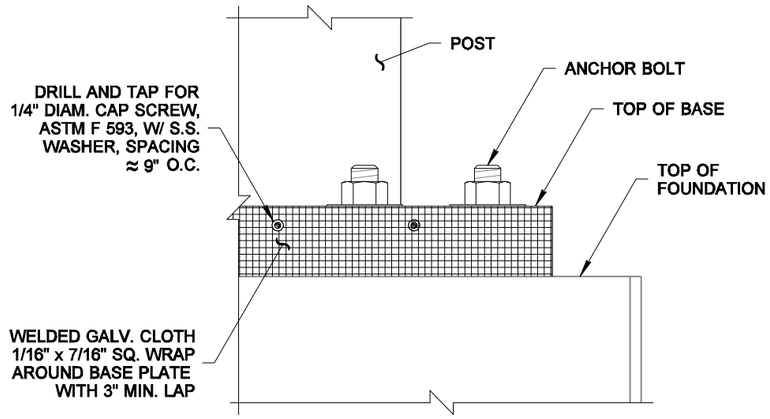

SCREEN DETAIL

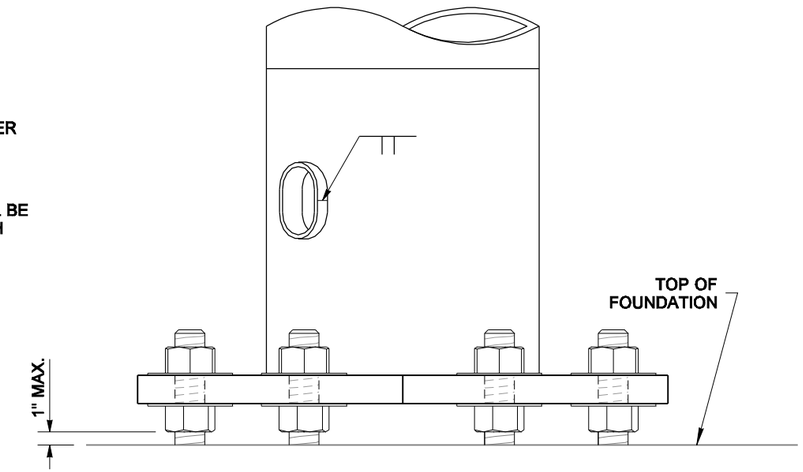

VIEW (C)

RICHARD P. ZELDENRUST
STATE OF WASHINGTON
25470
REGISTERED
PROFESSIONAL ENGINEER

EXPIRES NOVEMBER 14, 2006

NOTE: THIS PLAN IS NOT A LEGAL ENGINEERING DOCUMENT BUT AN ELECTRONIC DUPLICATE. THE ORIGINAL, SIGNED BY THE ENGINEER AND APPROVED FOR PUBLICATION, IS KEPT ON FILE AT THE WASHINGTON STATE DEPARTMENT OF TRANSPORTATION. A COPY MAY BE OBTAINED UPON REQUEST.

CANTILEVER SIGN STRUCTURE (TRUSS-TYPE) STANDARD PLAN G-3

SHEET 4 OF 4 SHEETS

APPROVED FOR PUBLICATION

Harold J. Peterfeso — STATE DESIGN ENGINEER — *11-09-05* — DATE

Washington State Department of Transportation

EFFECTIVE: APRIL 2, 2007 TO JANUARY 6, 2008

EFFECTIVE: APRIL 2, 2007 TO JANUARY 6, 2008

EFFECTIVE: APRIL 2, 2007 TO JANUARY 6, 2008

EFFECTIVE: APRIL 2, 2007 TO JANUARY 6, 2008

EFFECTIVE: APRIL 2, 2007 TO JANUARY 6, 2008

DRAWN BY: BILL BERENS

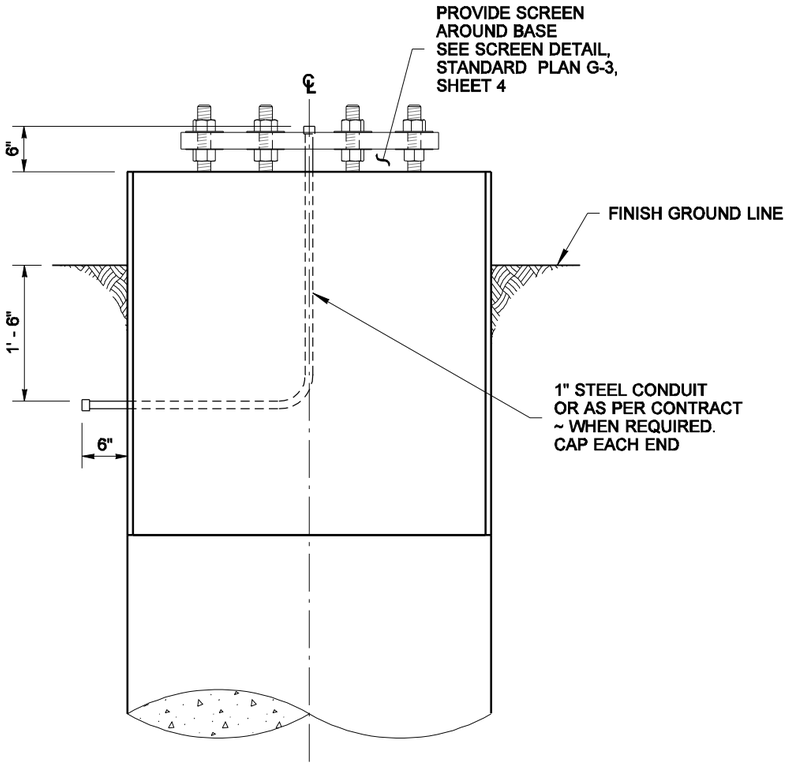

VIEW (A)

VALUES OF Z			
FOUNDATION TYPE	TOTAL SIGN AREA		ALLOWABLE LATERAL BEARING PRESSURE (PSF)
	200 SF OR LESS	200 SF ~ 400 SF	
	Z	Z	
1	13' - 0"	18' - 0"	1500 AND UP
	16' - 0"	22' - 0"	1000 ~ 1499

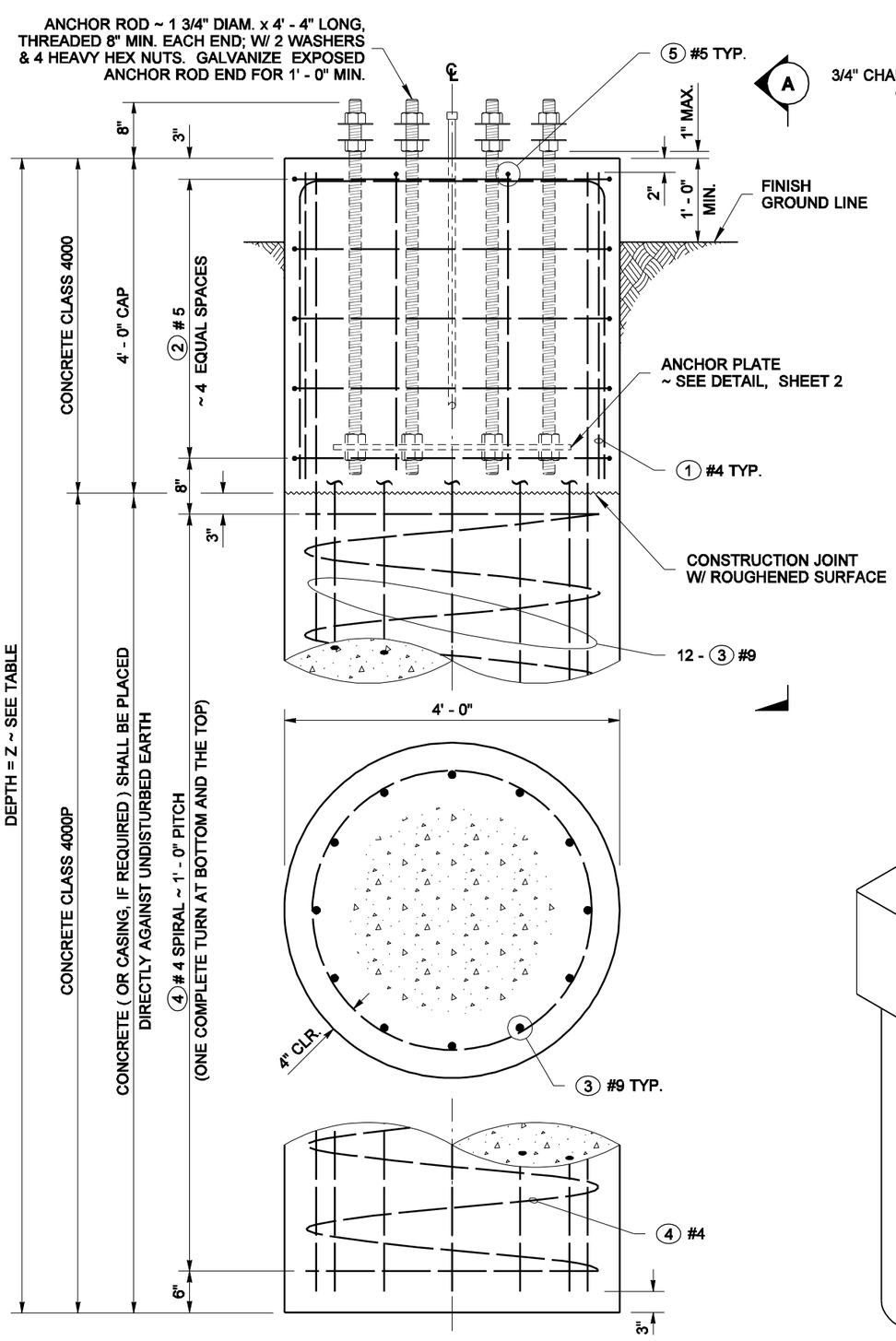

SIDE

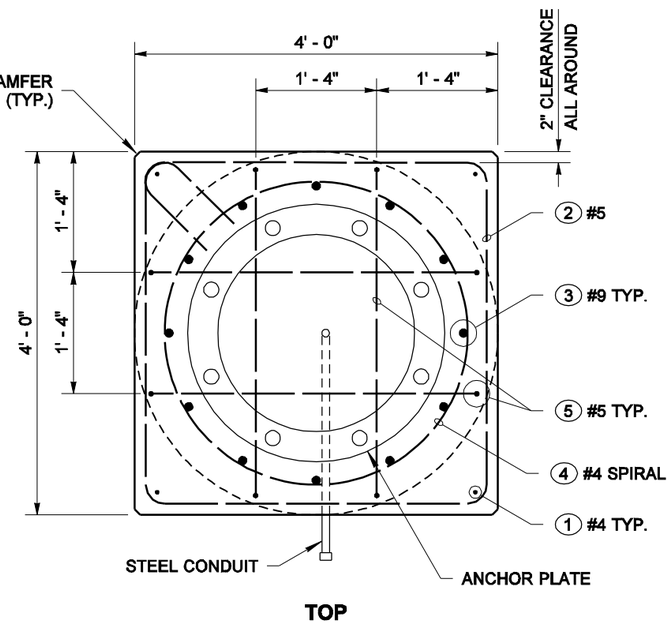

TOP

NOTES

1. See Standard Specification Section 8-21.3(9) for construction requirements.
2. Use a template to locate and secure bolts in place during foundation installation.

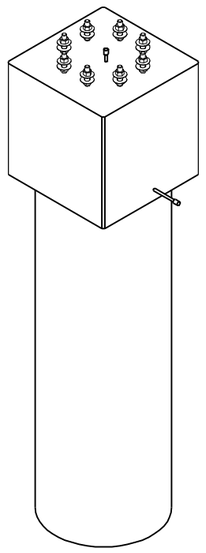

ISOMETRIC

RICHARD P. ZELDENRUST
STATE OF WASHINGTON
25470
REGISTERED
PROFESSIONAL ENGINEER

EXPIRES NOVEMBER 14, 2006

NOTE: THIS PLAN IS NOT A LEGAL ENGINEERING DOCUMENT BUT AN ELECTRONIC DUPLICATE. THE ORIGINAL, SIGNED BY THE ENGINEER AND APPROVED FOR PUBLICATION, IS KEPT ON FILE AT THE WASHINGTON STATE DEPARTMENT OF TRANSPORTATION. A COPY MAY BE OBTAINED UPON REQUEST.

CANTILEVER SIGN STRUCTURE (TRUSS-TYPE) FOUNDATION TYPE 1 STANDARD PLAN G-3a

SHEET 1 OF 2 SHEETS

APPROVED FOR PUBLICATION

Harold J. Peterfeso — STATE DESIGN ENGINEER

11-09-05 — DATE

Washington State Department of Transportation

EFFECTIVE: APRIL 2, 2007 TO JANUARY 6, 2008

EFFECTIVE: APRIL 2, 2007 TO JANUARY 6, 2008

EFFECTIVE: APRIL 2, 2007 TO JANUARY 6, 2008

DRAWN BY: BILL BERENS

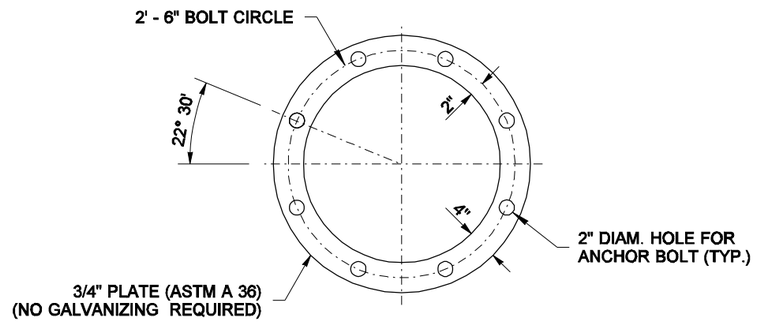

ANCHOR PLATE DETAIL

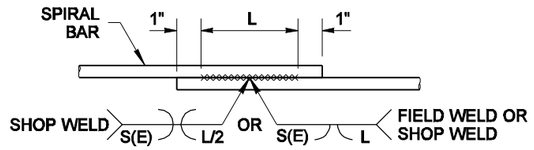

SEE TABLE FOR WELD DIMENSIONS

SPIRAL WELDED LAP SPLICE DETAIL

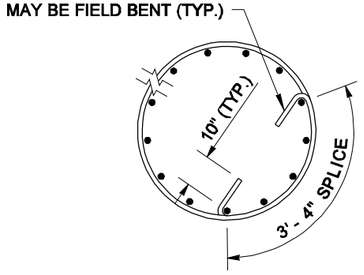

SPIRAL LAP SPLICE DETAIL

WELDING SHALL MEET THE REQUIREMENTS OF STD. SPEC. 6-02.3(24)E
FOR WELD DIMENSIONS, SEE TABLE BELOW

COLUMN AND SHAFT SPIRAL OPTIONS

DEFORMED BAR AASHTO M 31 GRADE 60	PLAIN STEEL BAR AASHTO M 31 GRADE 60	COLD DRAWN WIRE AASHTO M 32	DEFORMED WIRE AASHTO M 225	WELD DIMENSIONS (INCHES)		
				S	E	L
# 4	1/2" DIAM.	W20	D20	1/4	1/8	4
# 5	5/8" DIAM.	W31	D31	5/16	3/16	6
# 6	3/4" DIAM.	W44	D44	3/8	3/16	6

BAR LIST

MARK	LOCATION	QTY.	LENGTH	SIZE	TYPE
(1)	CAP VERTICAL	4	3' - 10"	#4	STR.
(2)	CAP HOOPS	5	15' - 9"	#5	
(3)	SHAFT VERTICAL	12	"Z" MINUS CLEARANCES	#9	STR.
(4)	SHAFT SPIRAL	1	AS REQUIRED	#4	
(5)	CAP TOP	4	10' - 10"	#5	

BENDING DIAGRAM
(ALL DIMENSIONS ARE OUT TO OUT)

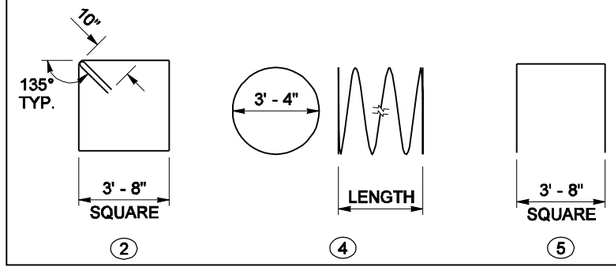

MATERIAL SPECIFICATIONS

SHAFT CONCRETE	CLASS 4000P
ALL OTHER CONCRETE	CLASS 4000
STEEL REINF. BAR	AASHTO M 31 GRADE 60
ANCHOR RODS	ASTM F 1554 GRADE 105
ANCHOR NUTS	AASHTO M 291
ANCHOR WASHERS	AASHTO M 293
ANCHORAGE GALVANIZING	AASHTO M 232
ANCHOR PLATE	ASTM A 36

RICHARD P. ZELDENRUST
STATE OF WASHINGTON
25470
REGISTERED
PROFESSIONAL ENGINEER

EXPIRES NOVEMBER 14, 2006

NOTE: THIS PLAN IS NOT A LEGAL ENGINEERING DOCUMENT BUT AN ELECTRONIC DUPLICATE. THE ORIGINAL, SIGNED BY THE ENGINEER AND APPROVED FOR PUBLICATION, IS KEPT ON FILE AT THE WASHINGTON STATE DEPARTMENT OF TRANSPORTATION. A COPY MAY BE OBTAINED UPON REQUEST.

CANTILEVER SIGN STRUCTURE (TRUSS-TYPE) FOUNDATION TYPE 1 STANDARD PLAN G-3a

SHEET 2 OF 2 SHEETS

APPROVED FOR PUBLICATION

Harold J. Peterfeso — STATE DESIGN ENGINEER
11-09-05 — DATE

Washington State Department of Transportation

EFFECTIVE: APRIL 2, 2007 TO JANUARY 6, 2008

EFFECTIVE: APRIL 2, 2007 TO JANUARY 6, 2008

DRAWN BY: BILL BERENS

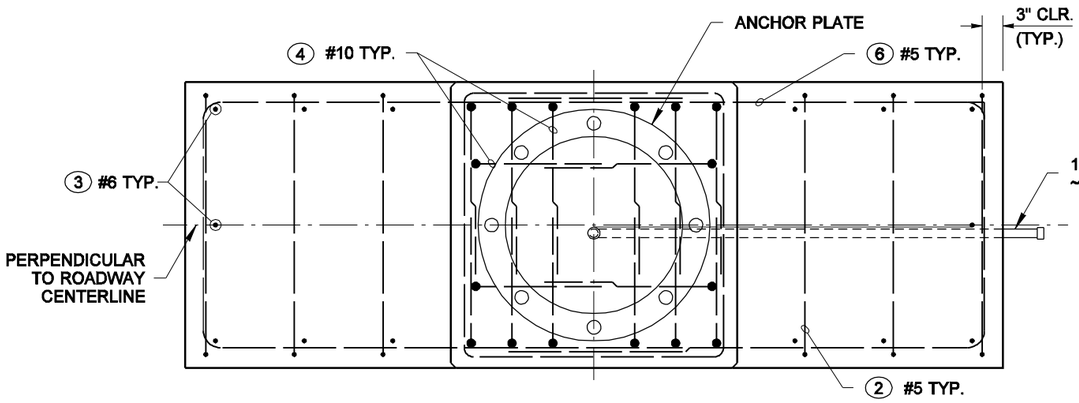

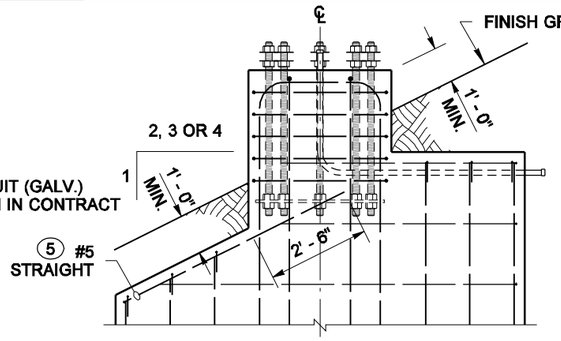

NOTE

1. See Standard Specification Section 8-21.3(9) for construction requirements.

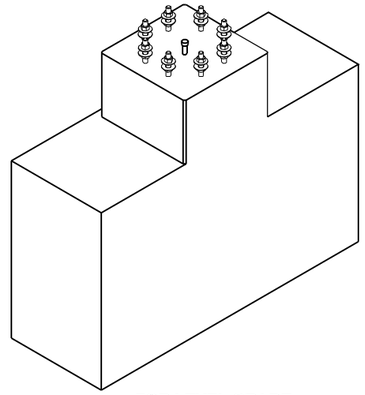

FOR LEVEL GRADE

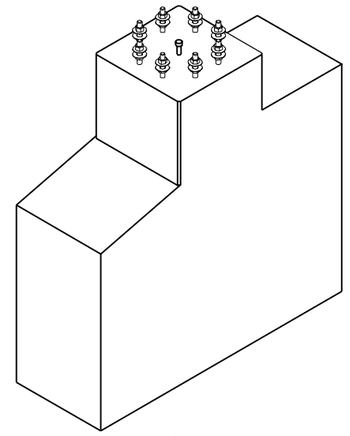

FOR SLOPED GRADE

ISOMETRIC

TOP

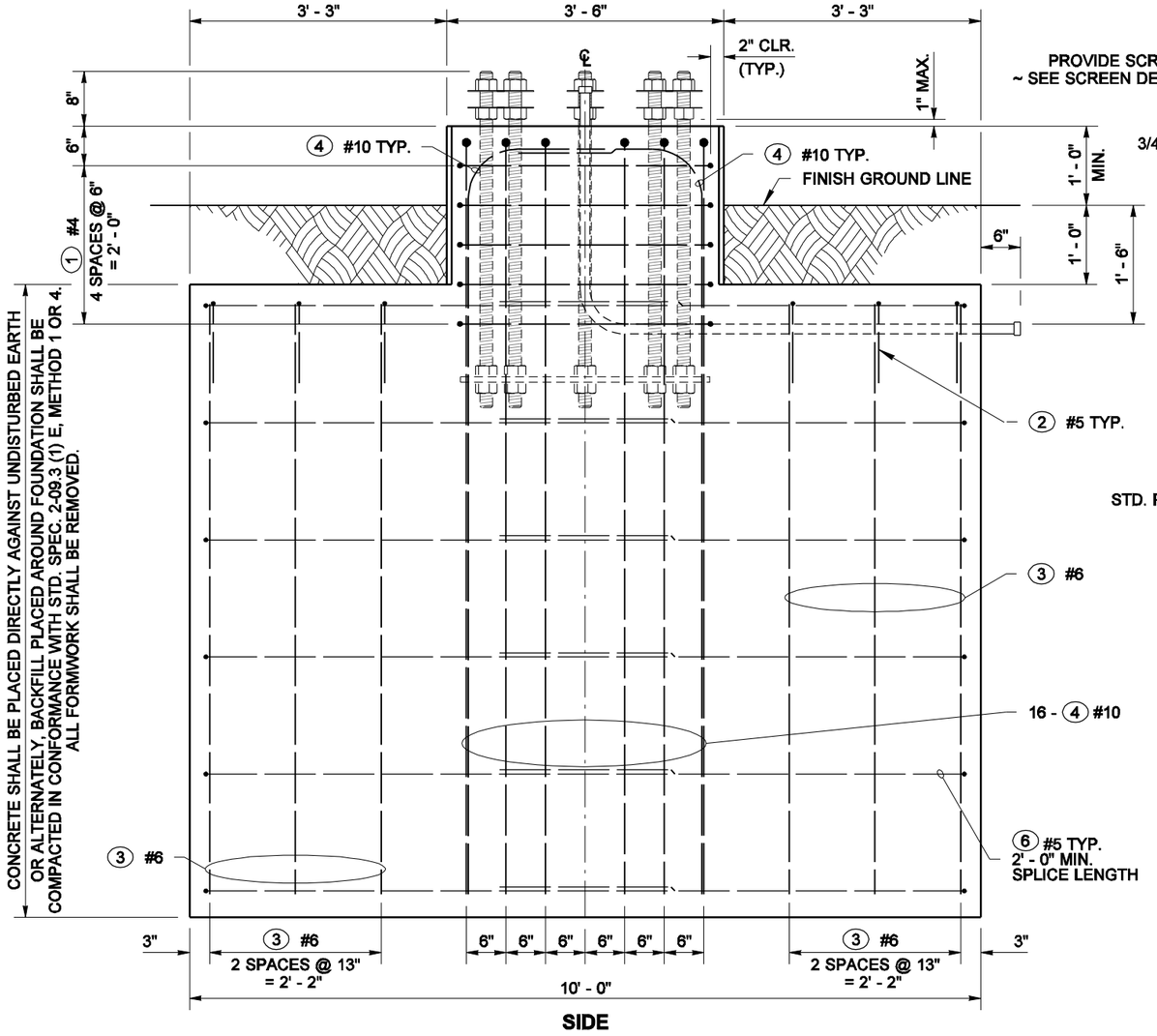

SIDE

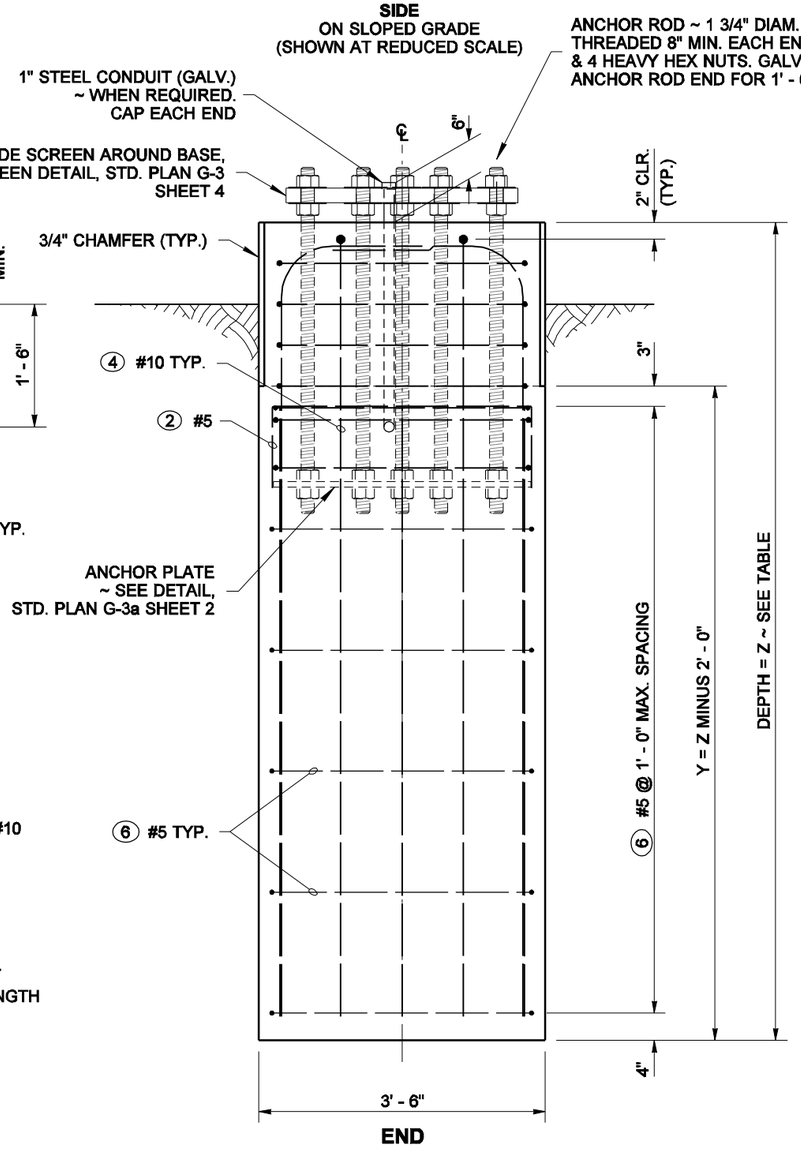

END

RICHARD P. ZELDENRUST
STATE OF WASHINGTON
25470
REGISTERED
PROFESSIONAL ENGINEER

EXPIRES NOVEMBER 14, 2006

NOTE: THIS PLAN IS NOT A LEGAL ENGINEERING DOCUMENT BUT AN ELECTRONIC DUPLICATE. THE ORIGINAL, SIGNED BY THE ENGINEER AND APPROVED FOR PUBLICATION, IS KEPT ON FILE AT THE WASHINGTON STATE DEPARTMENT OF TRANSPORTATION. A COPY MAY BE OBTAINED UPON REQUEST.

CANTILEVER SIGN STRUCTURE (TRUSS-TYPE) FOUNDATION TYPE 2 & 3 STANDARD PLAN G-3b

SHEET 1 OF 2 SHEETS

APPROVED FOR PUBLICATION

Harold J. Peterfeso — STATE DESIGN ENGINEER — *11-09-05* — DATE

Washington State Department of Transportation

EFFECTIVE: APRIL 2, 2007 TO JANUARY 6, 2008

EFFECTIVE: APRIL 2, 2007 TO JANUARY 6, 2008

EFFECTIVE: APRIL 2, 2007 TO JANUARY 6, 2008

DRAWN BY: BILL BERENS

BAR LIST ~ TYPES 2 AND 3

MARK	LOCATION	TOTAL SIGN AREA			
		200 SF OR LESS		+200 SF -400 SF	
		QTY.	SIZE	QTY.	SIZE
①	PEDESTAL HOOP	5	#4	5	#4
②	FOUNDATION WALL TIES	6	#5	6	#5
③	FOUNDATION VERTICALS	14	#6	14	#6
④	PEDESTAL VERTICALS	16	#10	16	#10
⑤	FOUNDATION WALL HORIZONTALS AT SLOPE	2	#5	2	#5
⑥	FOUNDATION WALL HORIZONTALS	VARIES SEE PLANS	#5	VARIES SEE PLANS	#5

BENDING DIAGRAM

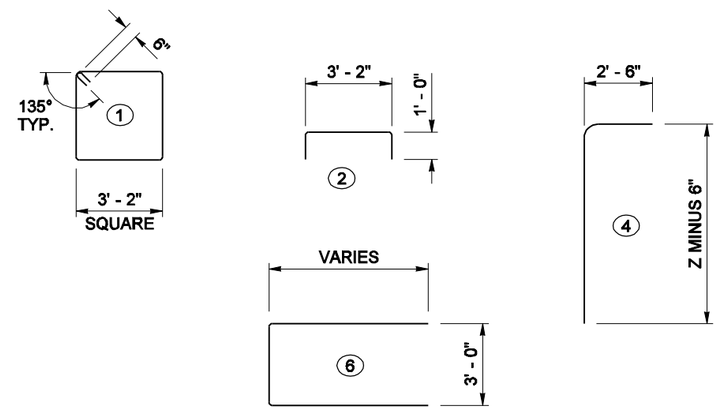

VALUES OF Z

FOUNDATION TYPE	TOTAL SIGN AREA		ALLOWABLE LATERAL BEARING PRESSURE (PSF)
	200 SF OR LESS	200 SF ~ 400 SF	
	Z	Z	
TYPE 2	9' - 0"	11' - 0"	2500 OR GREATER
TYPE 3	11' - 0"	13' - 6"	NOT LESS THAN 1500

MATERIAL SPECIFICATIONS

CONCRETE	CLASS 4000
STEEL REINF. BAR	AASHTO M 31 GRADE 60
ANCHOR RODS	ASTM F 1554 GRADE 105
ANCHOR NUTS	AASHTO M 291
ANCHOR WASHERS	AASHTO M 293
ANCHORAGE GALVANIZING	AASHTO M 232
ANCHOR PLATE	ASTM A 36

RICHARD P. ZELDENRUST
STATE OF WASHINGTON
25470
REGISTERED
PROFESSIONAL ENGINEER

EXPIRES NOVEMBER 14, 2006

NOTE: THIS PLAN IS NOT A LEGAL ENGINEERING DOCUMENT BUT AN ELECTRONIC DUPLICATE. THE ORIGINAL, SIGNED BY THE ENGINEER AND APPROVED FOR PUBLICATION, IS KEPT ON FILE AT THE WASHINGTON STATE DEPARTMENT OF TRANSPORTATION. A COPY MAY BE OBTAINED UPON REQUEST.

CANTILEVER SIGN STRUCTURE (TRUSS-TYPE) FOUNDATION TYPE 2 & 3 STANDARD PLAN G-3b

SHEET 2 OF 2 SHEETS

APPROVED FOR PUBLICATION

Harold J. Peterfeso — STATE DESIGN ENGINEER

11-09-05 — DATE

Washington State Department of Transportation

EFFECTIVE: APRIL 2, 2007 TO JANUARY 6, 2008

EFFECTIVE: APRIL 2, 2007 TO JANUARY 6, 2008

EFFECTIVE: APRIL 2, 2007 TO JANUARY 6, 2008

EFFECTIVE: APRIL 2, 2007 TO JANUARY 6, 2008

EFFECTIVE: APRIL 2, 2007 TO JANUARY 6, 2008

DRAWN BY: MONIQUE GLICK

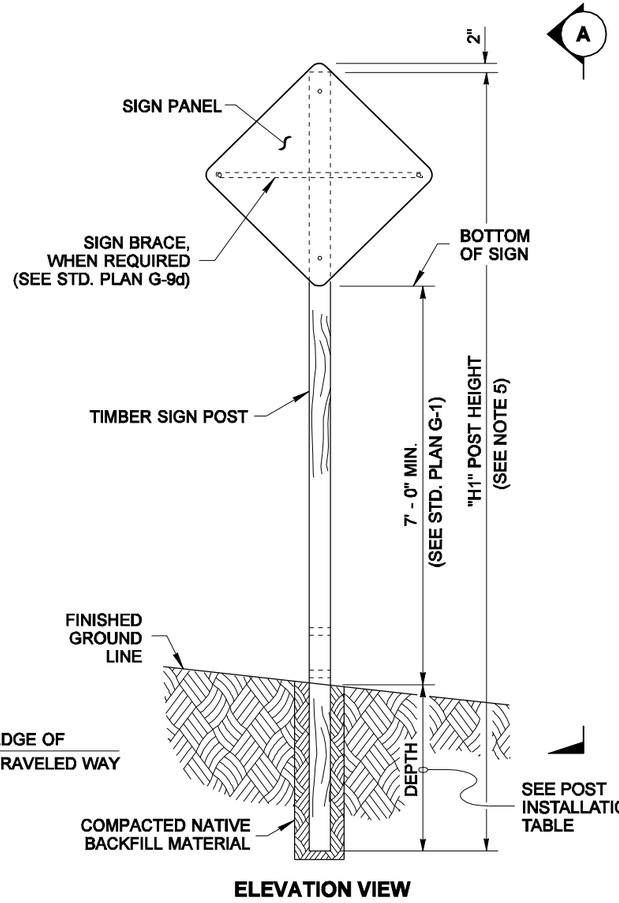

ELEVATION VIEW

SINGLE POST INSTALLATION

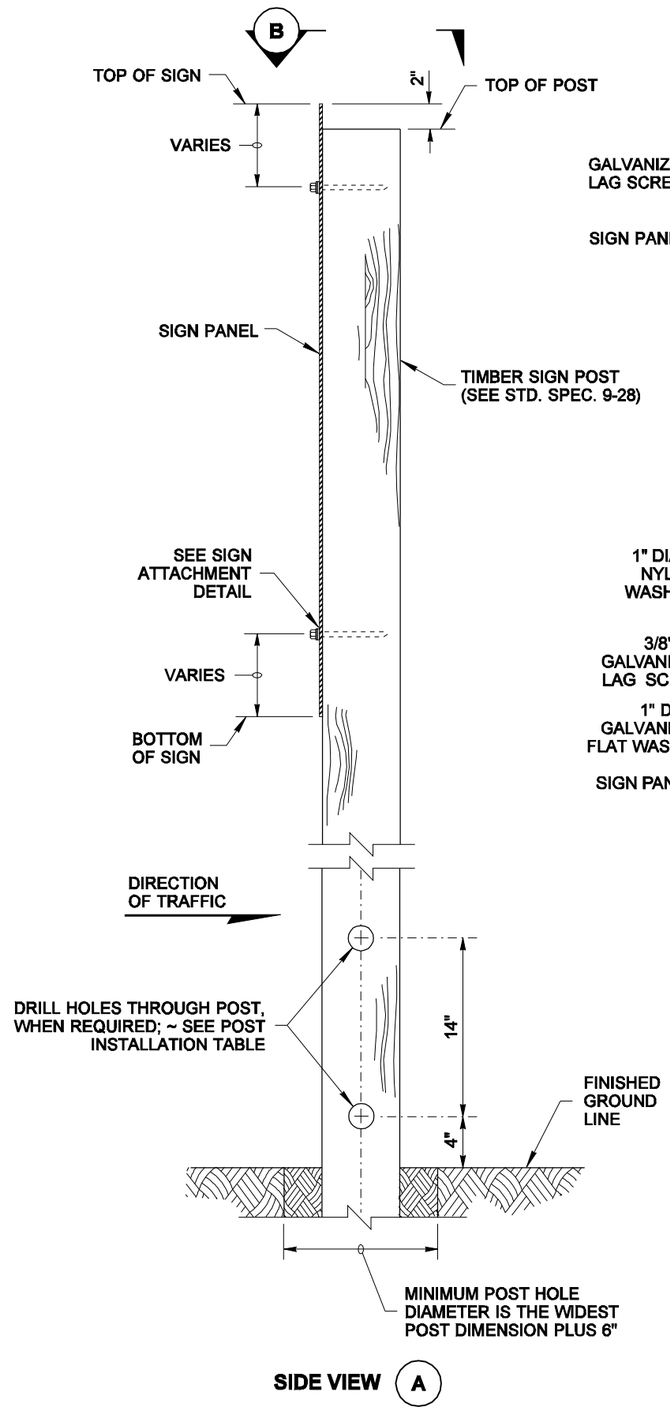

SIDE VIEW (A)

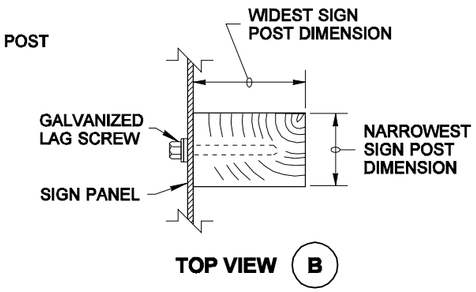

TOP VIEW (B)

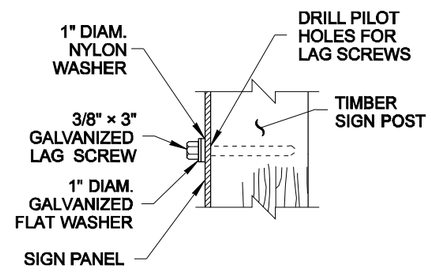

SIGN ATTACHMENT DETAIL

NOTES

1. Notch is only required with multiple post installations.
2. 6 x 10, 8 x 10, and 8 x 12 Timber Sign Posts can not be made breakaway and do not have holes or notches. These posts shall not be installed within the Design Clear Zone. They may be installed behind traffic barrier.
3. Signs with a width less than 12 feet and supported on three 6 x 6 or 6 x 8 posts shall not be installed within the Design Clear Zone. They may be installed behind traffic barrier.
4. Signs with a width less than 17 feet and supported on four 6 x 6 or 6 x 8 posts shall not be installed within the Design Clear Zone. They may be installed behind traffic barrier.
5. For "X", "Y", "H1", "H2", "H3", and "H4" refer to the Sign Specification Sheet in the Contract.

POST INSTALLATION TABLE

POST SIZE	DEPTH	HOLE DIAMETER	NOTCH DEPTH See Note 1
4 x 4	3' - 0"	NOT REQ'D	NOT REQ'D
4 x 6	4' - 0"	1 1/2"	1 1/2"
6 x 6	4' - 0"	2" See Note 3 & 4	2" See Note 3 & 4
6 x 8	4' - 0"	3" See Note 3 & 4	3" See Note 3 & 4
6 x 10	5' - 0"	See Note 2	See Note 2
8 x 10	5' - 0"	See Note 2	See Note 2
8 x 10	5' - 0"	See Note 2	See Note 2



EXPIRES MAY 5, 2007

NOTE: THIS PLAN IS NOT A LEGAL ENGINEERING DOCUMENT BUT AN ELECTRONIC DUPLICATE. THE ORIGINAL, SIGNED BY THE ENGINEER AND APPROVED FOR PUBLICATION, IS KEPT ON FILE AT THE WASHINGTON STATE DEPARTMENT OF TRANSPORTATION. A COPY MAY BE OBTAINED UPON REQUEST.

TIMBER SIGN SUPPORTS

STANDARD PLAN G-4a

SHEET 1 OF 3 SHEETS

APPROVED FOR PUBLICATION

Harold J. Peterfeso — STATE DESIGN ENGINEER

11-09-05 — DATE

Washington State Department of Transportation

EFFECTIVE: APRIL 2, 2007 TO JANUARY 6, 2008

EFFECTIVE: APRIL 2, 2007 TO JANUARY 6, 2008

EFFECTIVE: APRIL 2, 2007 TO JANUARY 6, 2008

DRAWN BY: MONIQUE GLICK

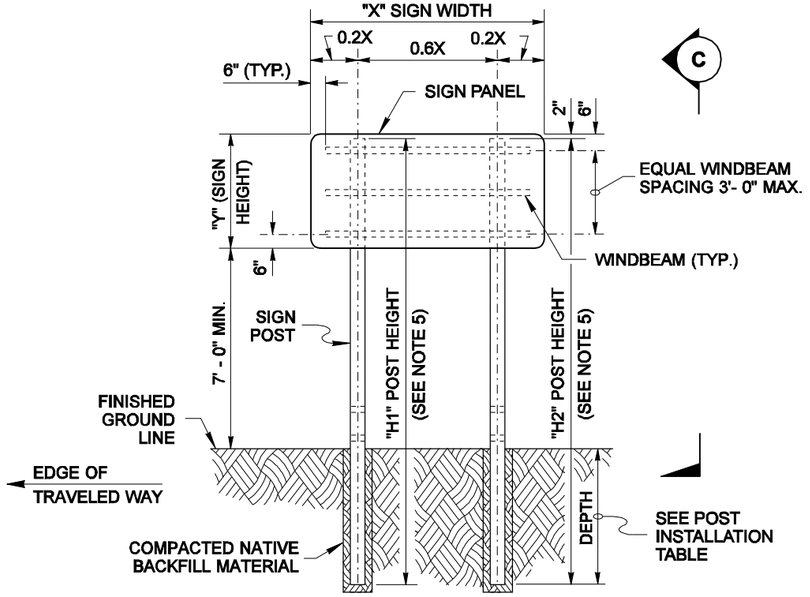

TWO POST INSTALLATION

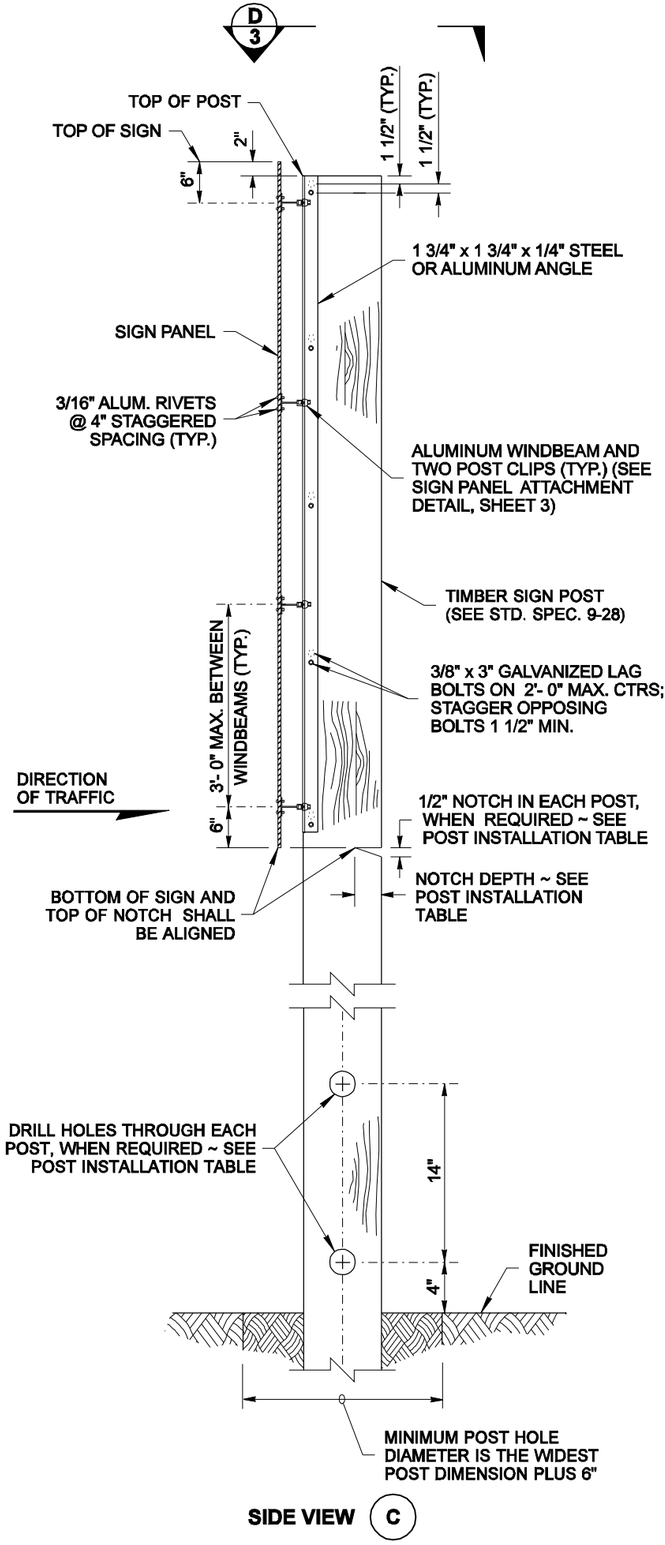

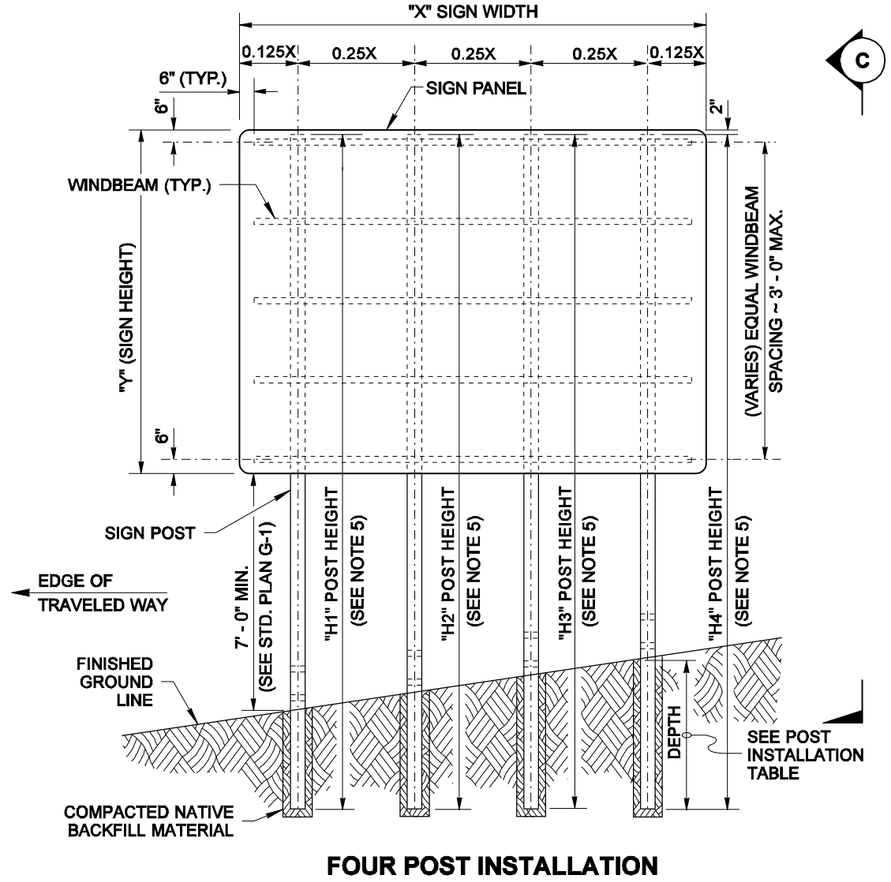

FOUR POST INSTALLATION

THREE POST INSTALLATION

R. SCOTT ZELLER
STATE OF WASHINGTON
28680
REGISTERED
PROFESSIONAL ENGINEER

EXPIRES MAY 5, 2007

NOTE: THIS PLAN IS NOT A LEGAL ENGINEERING DOCUMENT BUT AN ELECTRONIC DUPLICATE. THE ORIGINAL, SIGNED BY THE ENGINEER AND APPROVED FOR PUBLICATION, IS KEPT ON FILE AT THE WASHINGTON STATE DEPARTMENT OF TRANSPORTATION. A COPY MAY BE OBTAINED UPON REQUEST.

TIMBER SIGN SUPPORTS

STANDARD PLAN G-4a

SHEET 2 OF 3 SHEETS

APPROVED FOR PUBLICATION

Harold J. Peterfeso — STATE DESIGN ENGINEER

11-09-05 — DATE

Washington State Department of Transportation

EFFECTIVE: APRIL 2, 2007 TO JANUARY 6, 2008

EFFECTIVE: APRIL 2, 2007 TO JANUARY 6, 2008

DRAWN BY: MONIQUE GLICK

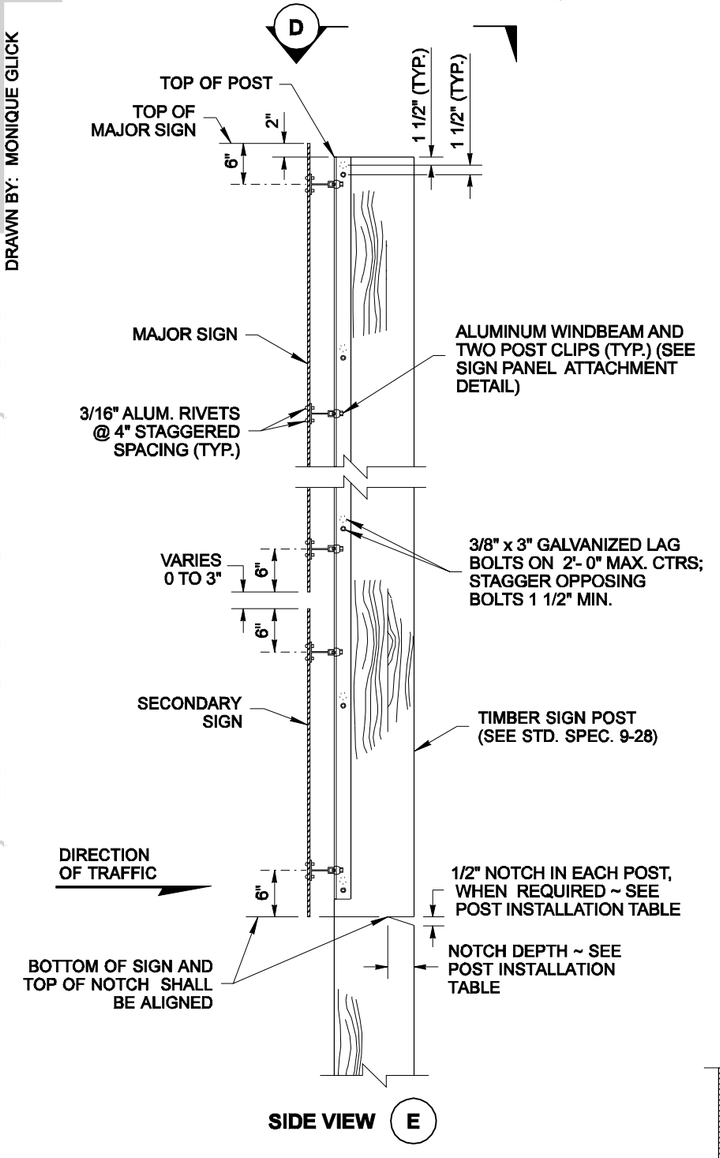

SIDE VIEW (E)

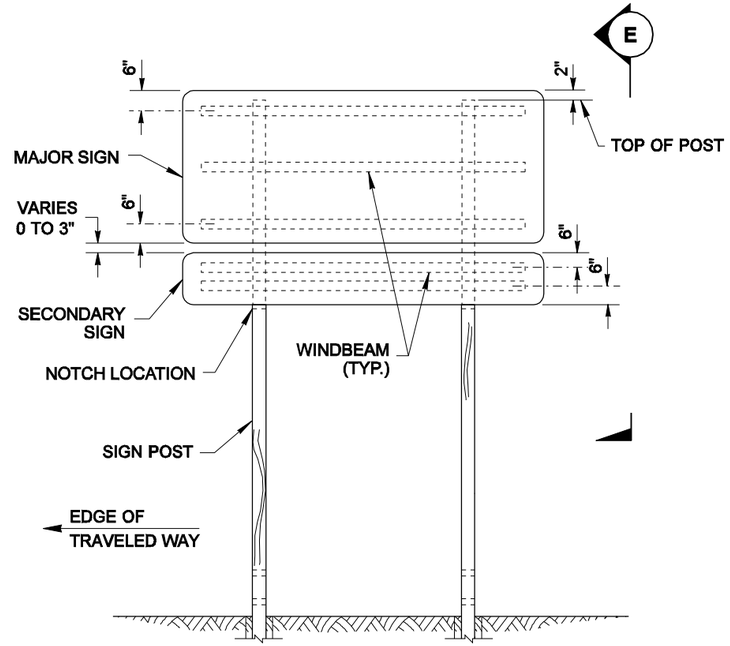

MAJOR AND SECONDARY SIGN INSTALLATION

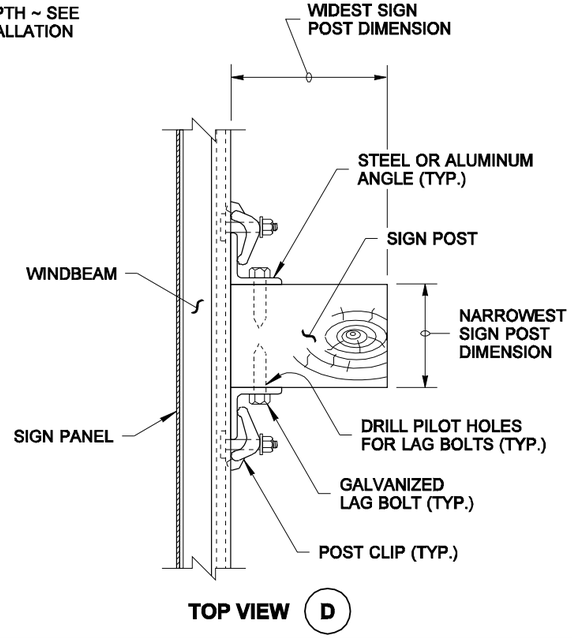

TOP VIEW (D)

EFFECTIVE: APRIL 2, 2007 TO JANUARY 6, 2008

EFFECTIVE: APRIL 2, 2007 TO JANUARY 6, 2008

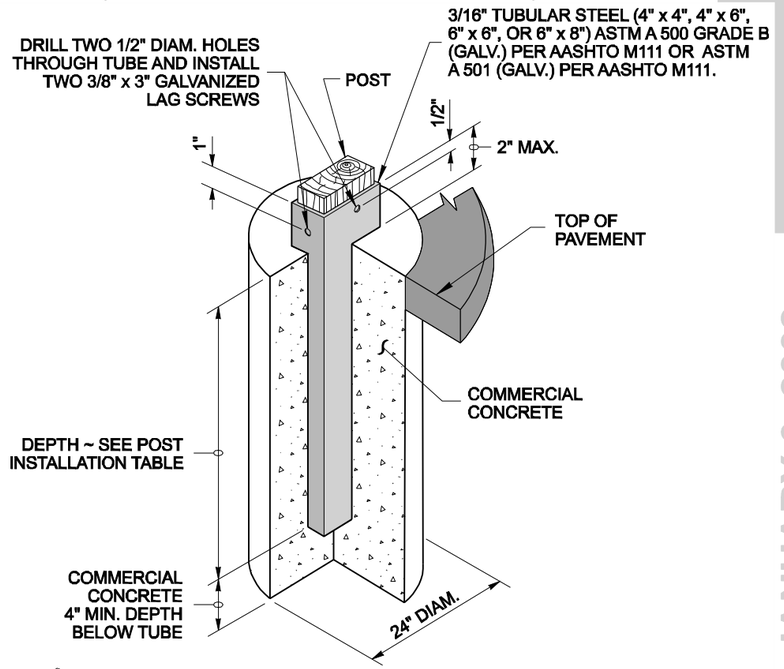

ISOMETRIC VIEW

CONCRETE FOUNDATION SLEEVE DETAIL

(TO BE USED WHEN PLACING TIMBER POST IN A PAVED AREA)

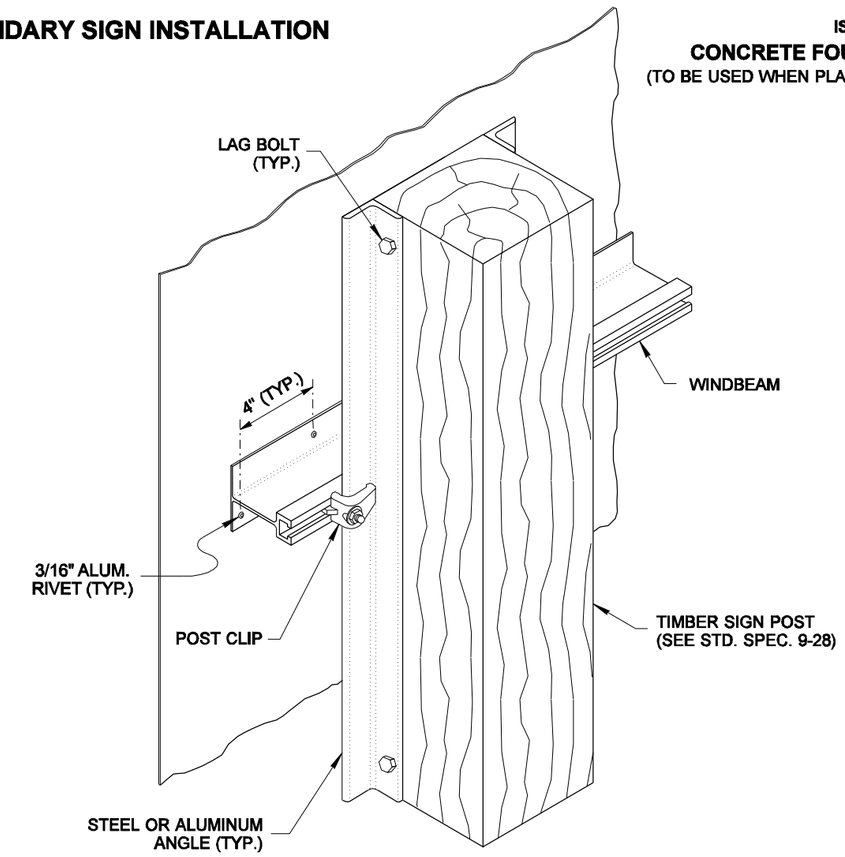

ISOMETRIC VIEW

SIGN PANEL ATTACHMENT DETAIL

R. SCOTT ZELLER
STATE OF WASHINGTON
28680
REGISTERED
PROFESSIONAL ENGINEER

EXPIRES MAY 5, 2007

NOTE: THIS PLAN IS NOT A LEGAL ENGINEERING DOCUMENT BUT AN ELECTRONIC DUPLICATE. THE ORIGINAL, SIGNED BY THE ENGINEER AND APPROVED FOR PUBLICATION, IS KEPT ON FILE AT THE WASHINGTON STATE DEPARTMENT OF TRANSPORTATION. A COPY MAY BE OBTAINED UPON REQUEST.

TIMBER SIGN SUPPORTS

STANDARD PLAN G-4a

SHEET 3 OF 3 SHEETS

APPROVED FOR PUBLICATION

Harold J. Peterfeso — STATE DESIGN ENGINEER

11-09-05 — DATE

Washington State Department of Transportation

EFFECTIVE: APRIL 2, 2007 TO JANUARY 6, 2008

EFFECTIVE: APRIL 2, 2007 TO JANUARY 6, 2008

EFFECTIVE: APRIL 2, 2007 TO JANUARY 6, 2008

DRAWN BY: ADAM COCHRAN

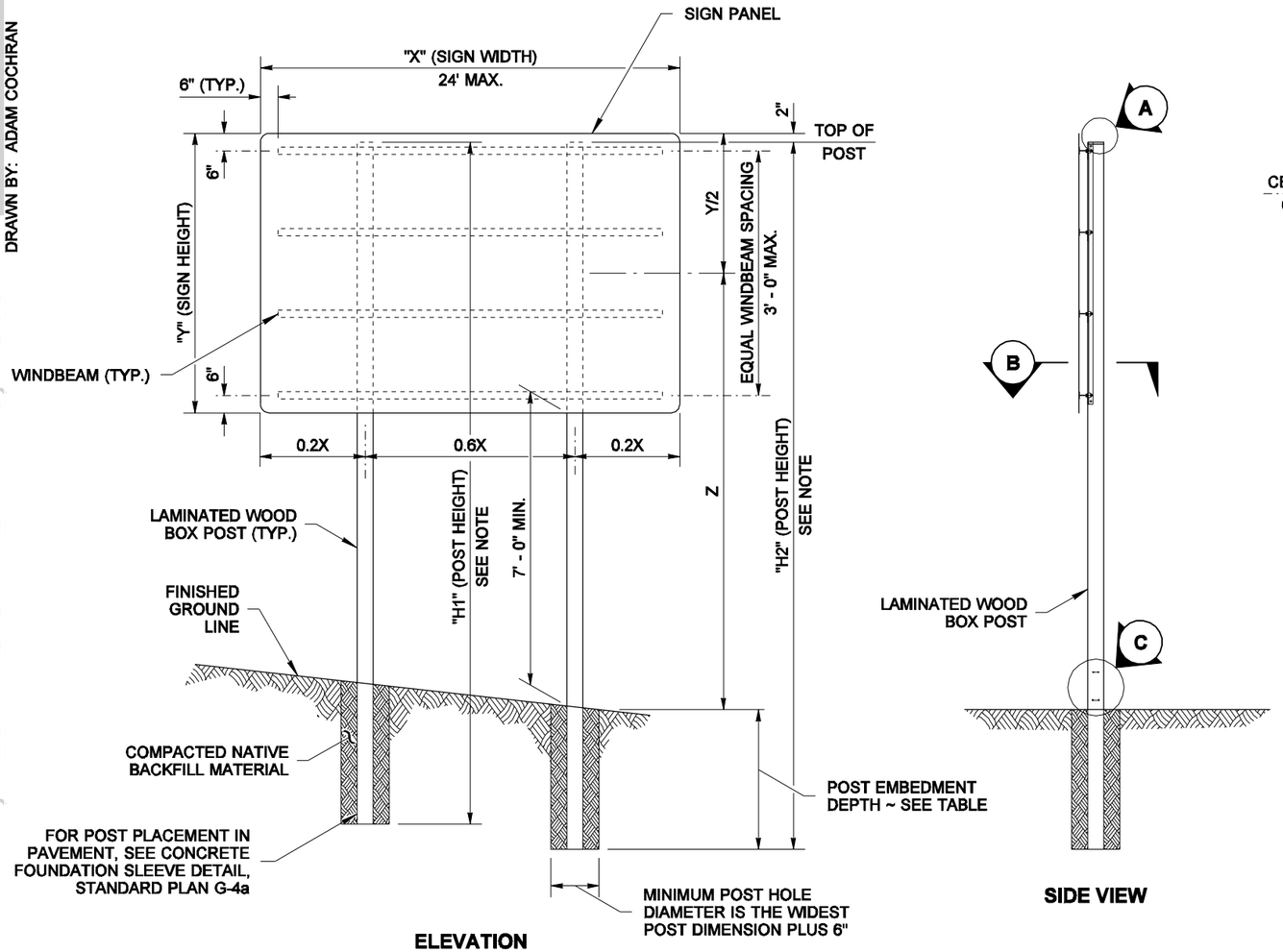

ELEVATION

SIDE VIEW

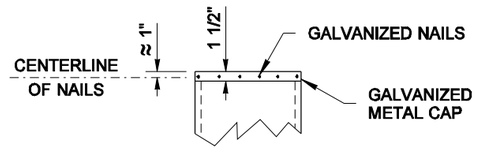

DETAIL (A)

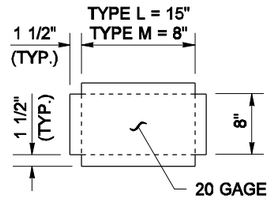

GALVANIZED METAL CAP

NOTE

See "Construction Sign Specification Sheet" of the contract for "H1", "H2", "H3", "H4", "X" & "Y" values and definitions.

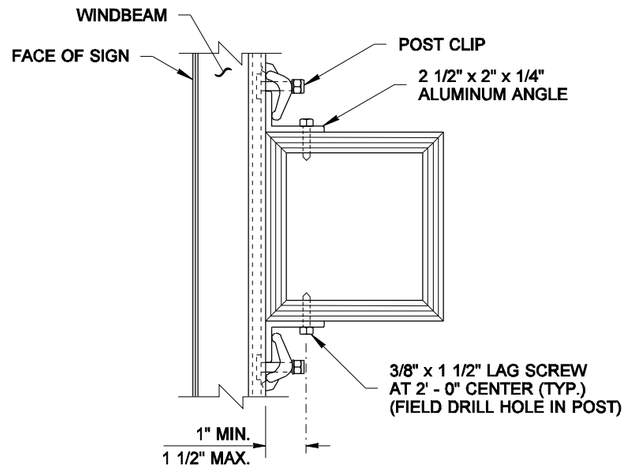

SECTION (B)

POST EMBEDMENT DEPTH DEPTH IN FEET						
Z HEIGHT (FT)	TOTAL SIGN AREA (SQUARE FEET)					
	UP TO 50	51 TO 100	101 TO 150	151 TO 200	201 TO 250	251 TO 290
9 TO 12	6	6	7	8	9	10
13 TO 15	6	6	7.5	9	10	
16 TO 18	7	7.5	9	NOT PERMITTED		
19 TO 22	7	8	10			
23 TO 26	7.5	8.5				

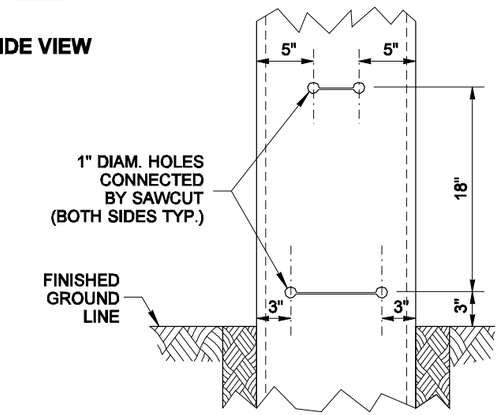

TYPE L POST

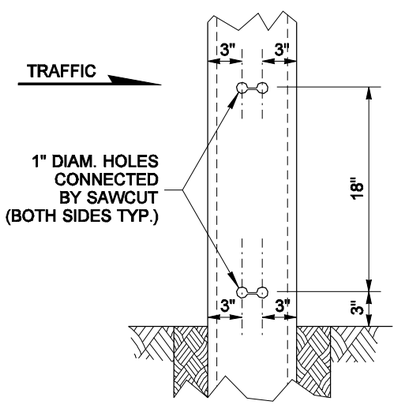

TYPE M POST

BREAKAWAY FEATURE

DETAIL (C)

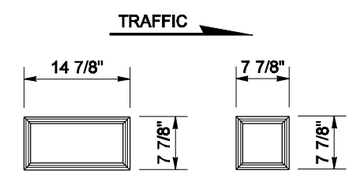

TYPE L POST TYPE M POST

TYPICAL SECTIONS

R. SCOTT ZELLER
STATE OF WASHINGTON
28680
REGISTERED
PROFESSIONAL ENGINEER

EXPIRES MAY 5, 2005

NOTE: THIS PLAN IS NOT A LEGAL ENGINEERING DOCUMENT BUT AN ELECTRONIC DUPLICATE. THE ORIGINAL, SIGNED BY THE ENGINEER AND APPROVED FOR PUBLICATION, IS KEPT ON FILE AT THE WASHINGTON STATE DEPARTMENT OF TRANSPORTATION. A COPY MAY BE OBTAINED UPON REQUEST.

ROADSIDE SIGNS ON LAMINATED WOOD BOX POSTS STANDARD PLAN G-4b

SHEET 1 OF 1 SHEET

APPROVED FOR PUBLICATION

Harold J. Peterfeso — STATE DESIGN ENGINEER

06-30-04 — DATE

Washington State Department of Transportation

EFFECTIVE: APRIL 2, 2007 TO JANUARY 6, 2008

EFFECTIVE: APRIL 2, 2007 TO JANUARY 6, 2008

DRAWN BY: MARK SUJKA

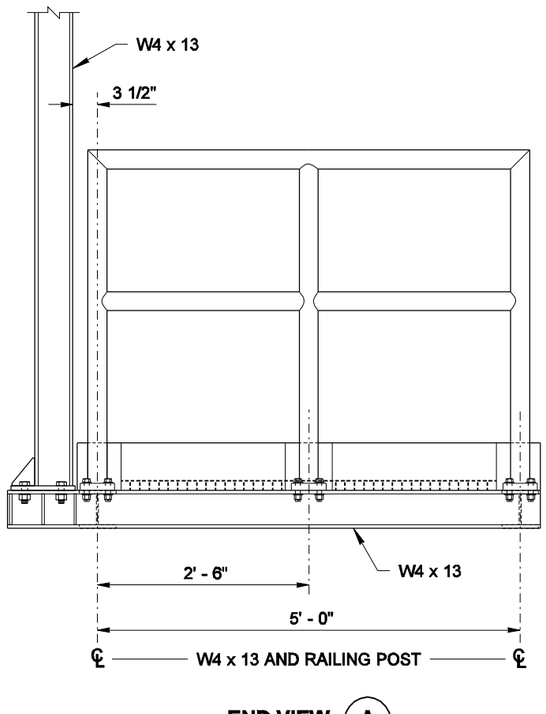

END VIEW (A)

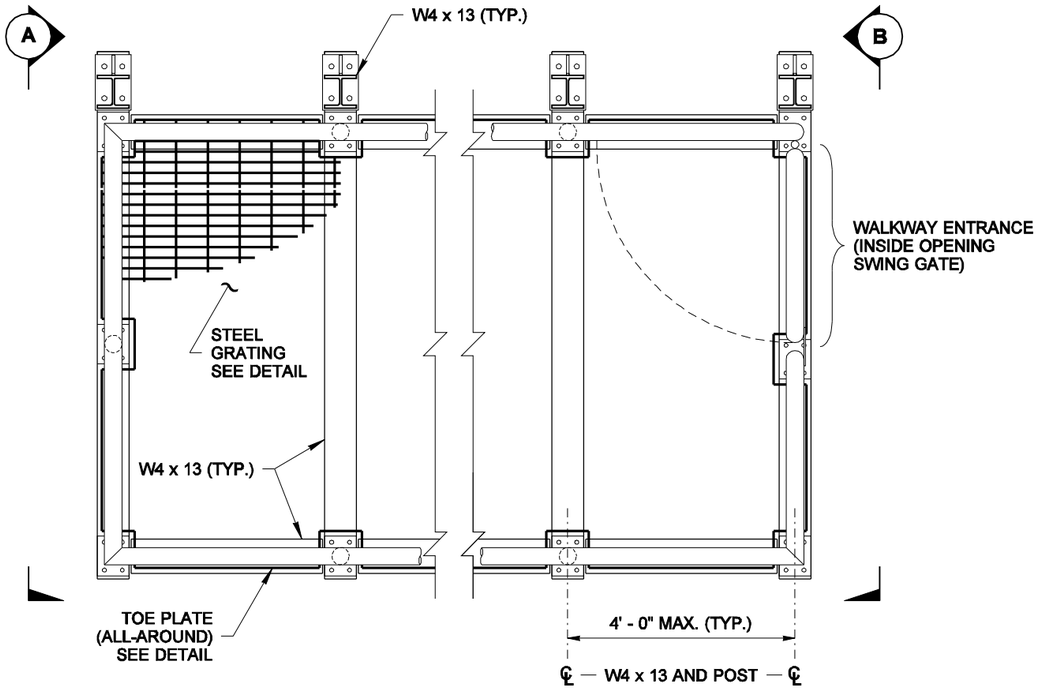

PLAN

MAINTENANCE WALKWAY

MATERIAL SPECIFICATIONS	
PIPE	ASTM A 36 OR ASTM A 53 GRADE B, TYPE E OR S, OR ASTM A 500 GRADE B
PLATES AND SHAPES	ASTM A 36
STRUCTURAL TUBING	ASTM A 500 GRADE B
GALVANIZING FOR PIPE PLATES AND SHAPES	AASHTO M 111
HIGH STRENGTH BOLTS, NUTS, & WASHERS; INCL. MOUNTING BEAM BOLTS	STD SPEC. 9-06.5(3)
ALL OTHER BOLTS	STD SPEC. 9-06.5(1)
FASTENER GALVANIZING	AASHTO M 232
STEEL GRATING	ASTM A 36

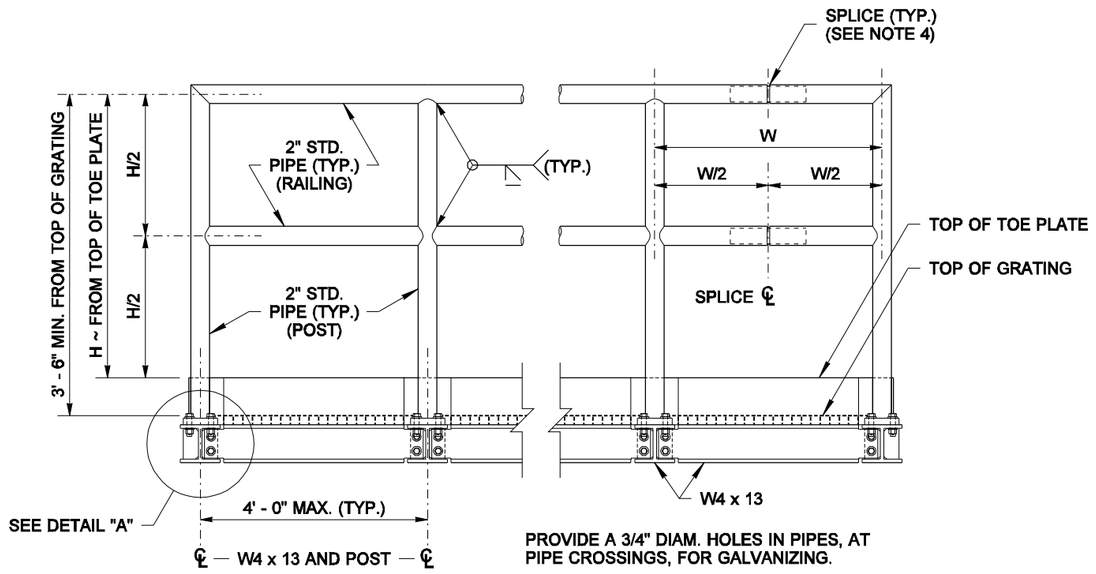

PROVIDE A 3/4" DIAM. HOLES IN PIPES, AT PIPE CROSSINGS, FOR GALVANIZING.

ELEVATION

MAINTENANCE WALKWAY

NOTES

1. NOT INTENDED FOR USE IN FRONT OF STATIC SIGNS.
2. FOR MOUNTING THE MAINTENANCE WALKWAY TO A MONOTUBE OVERHEAD SIGN STRUCTURE, SEE STANDARD PLAN G-6a.
3. FOR MOUNTING THE MAINTENANCE WALKWAY TO A TRUSS-TYPE OVERHEAD SIGN STRUCTURE, SEE STANDARD PLAN G-6b.
4. LOCATION OF RAILING SPLICES TO BE DETERMINED BY FABRICATOR. SEE "RAILING SPLICE DETAIL".

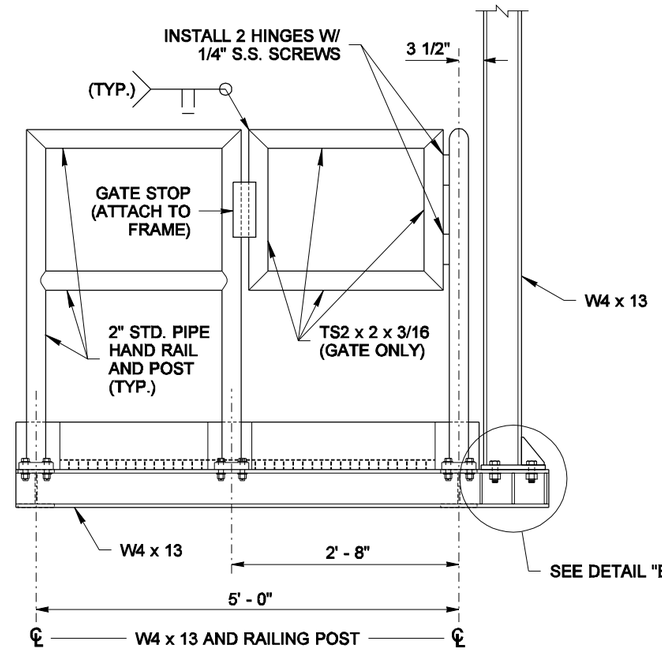

MAINTENANCE WALKWAY GATE

END VIEW (B)

RICHARD P. ZELDENRUST
STATE OF WASHINGTON
25470
REGISTERED
PROFESSIONAL ENGINEER

EXPIRES NOVEMBER 14, 2004

NOTE: THIS PLAN IS NOT A LEGAL ENGINEERING DOCUMENT BUT AN ELECTRONIC DUPLICATE. THE ORIGINAL, SIGNED BY THE ENGINEER, AND APPROVED FOR PUBLICATION, IS KEPT ON FILE AT THE WASHINGTON STATE DEPARTMENT OF TRANSPORTATION. A COPY MAY BE OBTAINED UPON REQUEST.

MAINTENANCE WALKWAY FOR OVERHEAD SIGN STRUCTURES

STANDARD PLAN G-6

SHEET 1 OF 3 SHEETS

APPROVED FOR PUBLICATION

Harold J. Peterfeso — STATE DESIGN ENGINEER

08-27-03 — DATE

Washington State Department of Transportation

EFFECTIVE: APRIL 2, 2007 TO JANUARY 6, 2008

EFFECTIVE: APRIL 2, 2007 TO JANUARY 6, 2008

DRAWN BY: MARK SUJKA

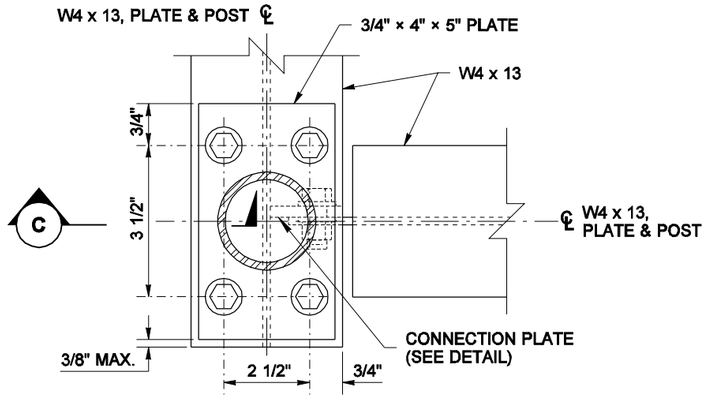

PLAN

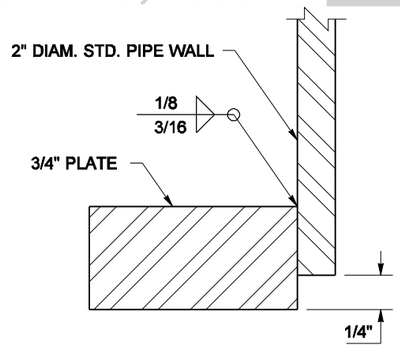

SECTION (C)

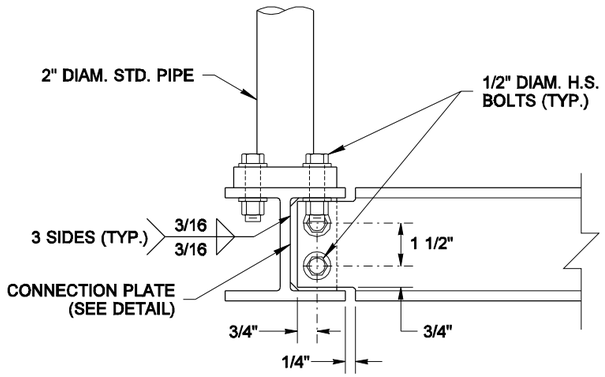

ELEVATION

DETAIL "A"

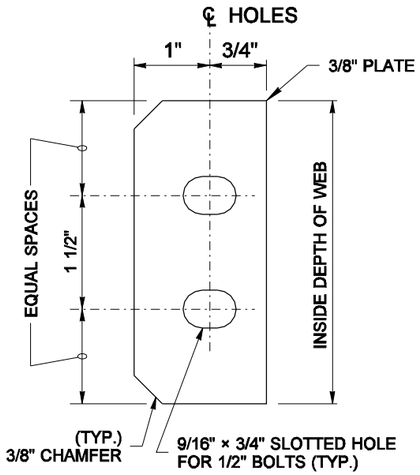

CONNECTION PLATE DETAIL

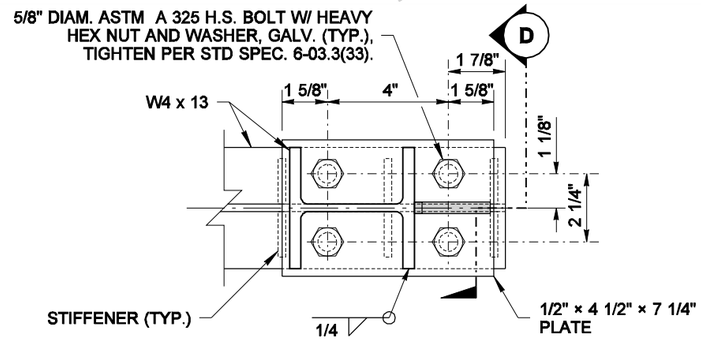

PLAN

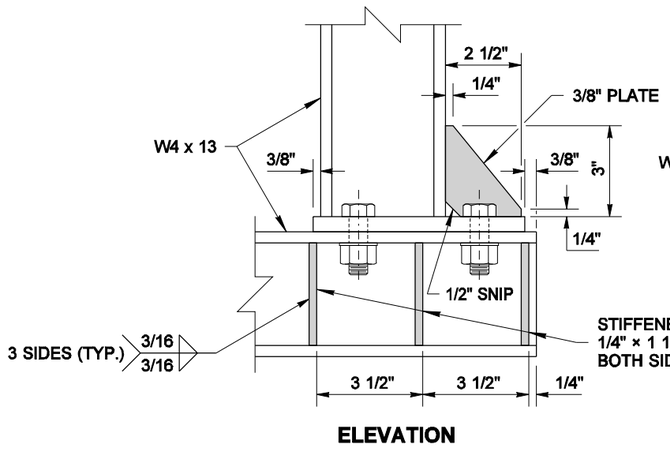

ELEVATION

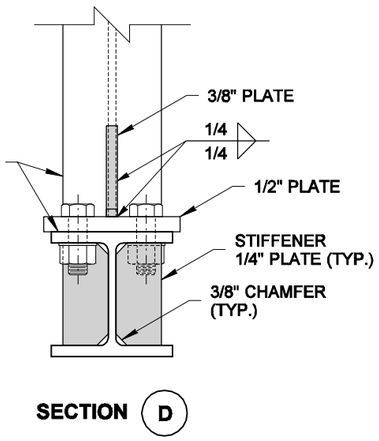

SECTION (D)

DETAIL "B"

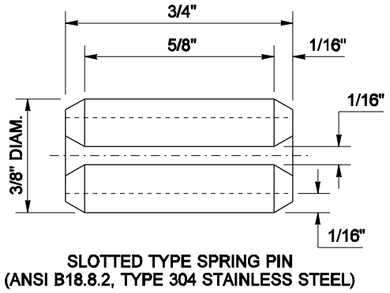

SLOTTED TYPE SPRING PIN
(ANSI B18.8.2, TYPE 304 STAINLESS STEEL)

DRIVE PIN DETAIL

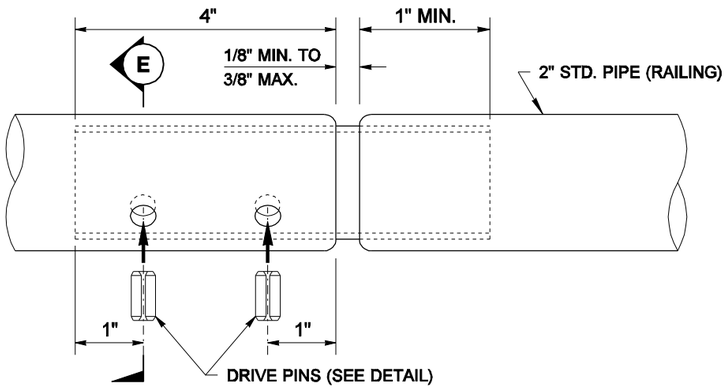

ELEVATION

RAILING SPLICE DETAIL

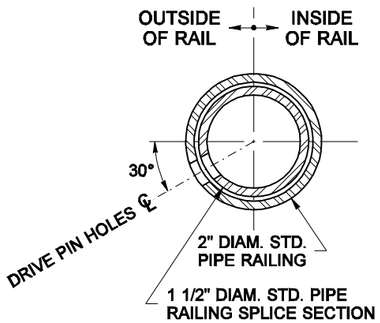

SECTION (E)



EXPIRES NOVEMBER 14, 2004

NOTE: THIS PLAN IS NOT A LEGAL ENGINEERING DOCUMENT BUT AN ELECTRONIC DUPLICATE. THE ORIGINAL, SIGNED BY THE ENGINEER, AND APPROVED FOR PUBLICATION, IS KEPT ON FILE AT THE WASHINGTON STATE DEPARTMENT OF TRANSPORTATION. A COPY MAY BE OBTAINED UPON REQUEST.

MAINTENANCE WALKWAY FOR OVERHEAD SIGN STRUCTURES

STANDARD PLAN G-6

SHEET 2 OF 3 SHEETS

APPROVED FOR PUBLICATION

Harold J. Peterfeso — STATE DESIGN ENGINEER

08-27-03 — DATE

Washington State Department of Transportation

EFFECTIVE: APRIL 2, 2007 TO JANUARY 6, 2008

EFFECTIVE: APRIL 2, 2007 TO JANUARY 6, 2008
EFFECTIVE: APRIL 2, 2007 TO JANUARY 6, 2008

DRAWN BY: MARK SUJKA

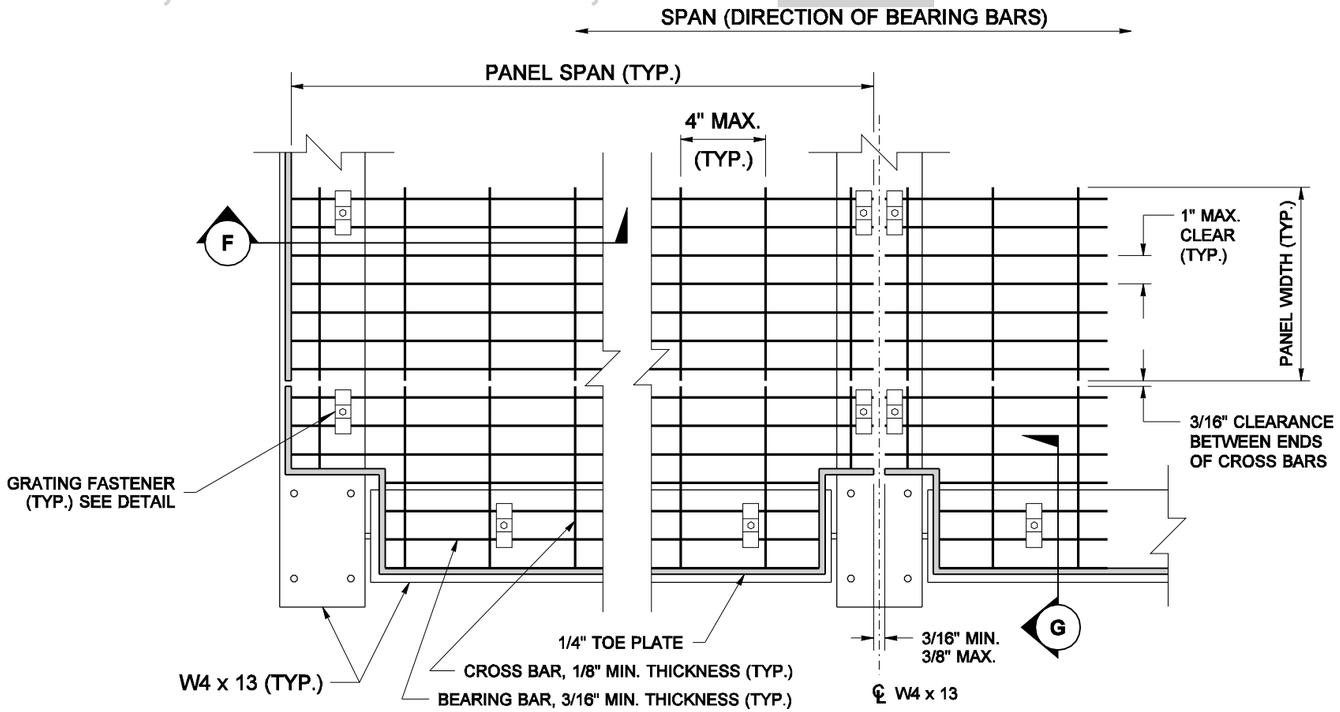

PLAN

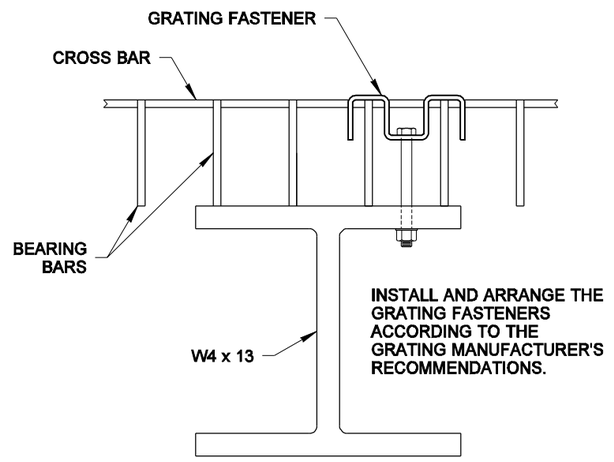

GRATING FASTENER DETAIL

STEEL GRATING DETAIL

(RAILING NOT SHOWN FOR CLARITY)

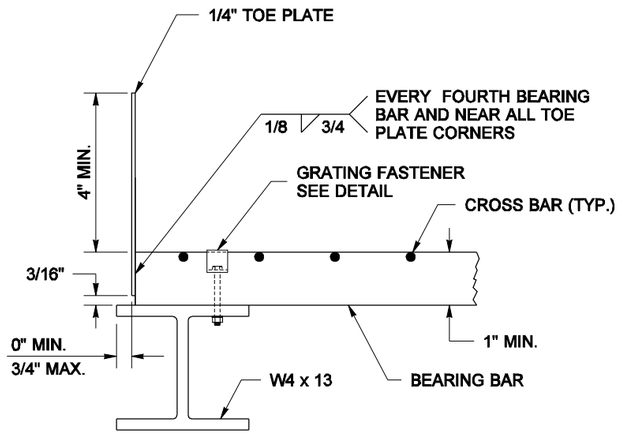

SECTION F

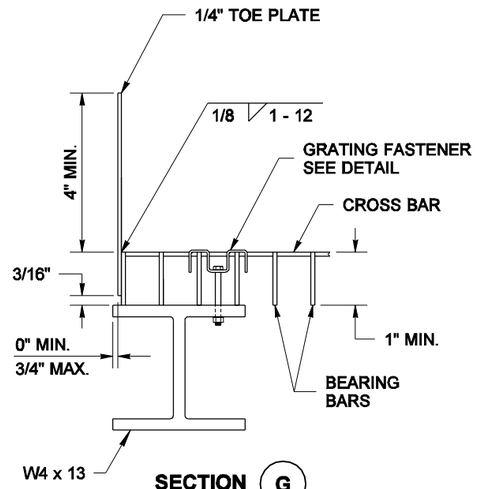

SECTION G

RICHARD P. ZELDENRUST
STATE OF WASHINGTON
25470
REGISTERED
PROFESSIONAL ENGINEER

EXPIRES NOVEMBER 14, 2004

NOTE: THIS PLAN IS NOT A LEGAL ENGINEERING DOCUMENT BUT AN ELECTRONIC DUPLICATE. THE ORIGINAL, SIGNED BY THE ENGINEER AND APPROVED FOR PUBLICATION, IS KEPT ON FILE AT THE WASHINGTON STATE DEPARTMENT OF TRANSPORTATION. A COPY MAY BE OBTAINED UPON REQUEST.

MAINTENANCE WALKWAY FOR OVERHEAD SIGN STRUCTURES

STANDARD PLAN G-6

SHEET 3 OF 3 SHEETS

APPROVED FOR PUBLICATION

Harold J. Peterfeso — STATE DESIGN ENGINEER

08-27-03 — DATE

Washington State Department of Transportation

EFFECTIVE: APRIL 2, 2007 TO JANUARY 6, 2008
EFFECTIVE: APRIL 2, 2007 TO JANUARY 6, 2008

EFFECTIVE: APRIL 2, 2007 TO JANUARY 6, 2008
EFFECTIVE: APRIL 2, 2007 TO JANUARY 6, 2008

DRAWN BY: MARK SUJKA

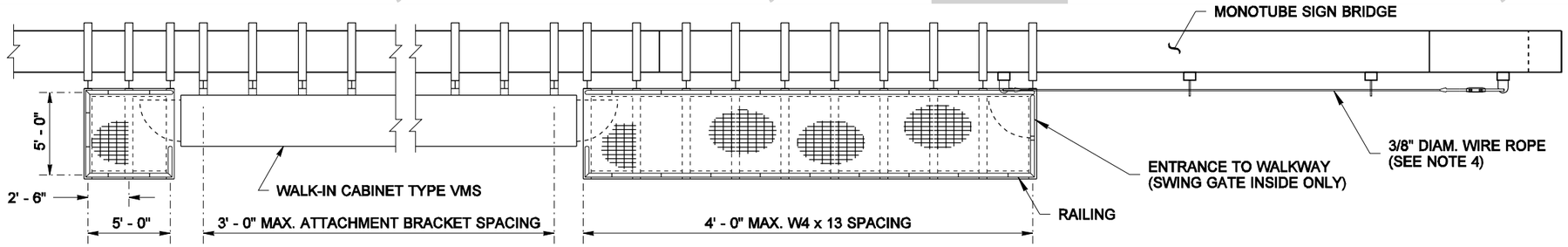

PLAN

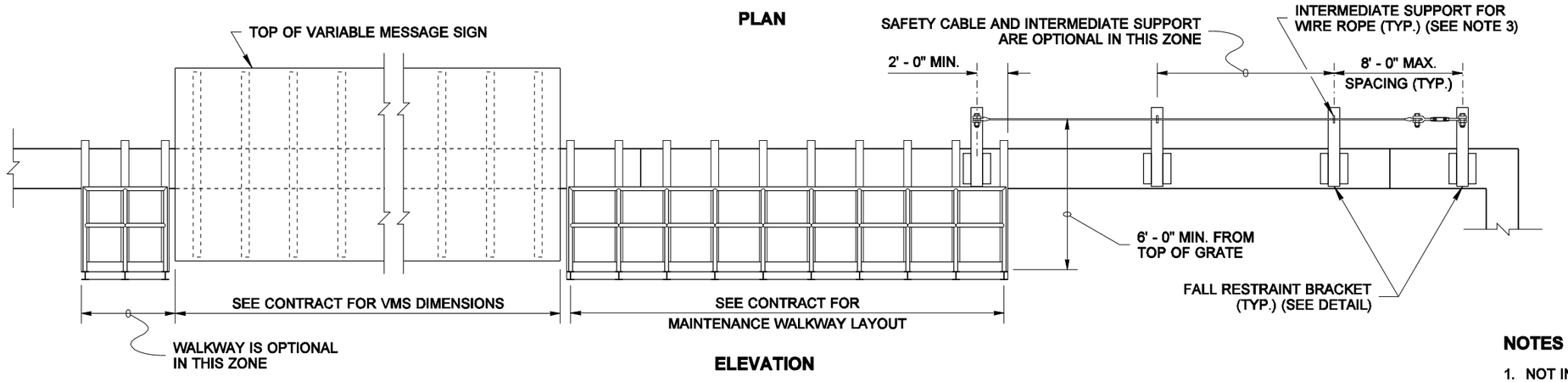

ELEVATION

MATERIAL SPECIFICATIONS	
PIPE	ASTM A 36 OR ASTM A 53 GRADE B, TYPE E OR S, OR ASTM A 500 GRADE B
PLATES AND SHAPES	ASTM A 36
STRUCTURAL TUBING	ASTM A 500 GRADE B
GALVANIZING FOR PIPE PLATES AND SHAPES	AASHTO M 111
HIGH STRENGTH BOLTS, NUTS, & WASHERS; INCL. MOUNTING BEAM BOLTS	STD SPEC. 9-06.5(3)
ALL OTHER BOLTS	STD SPEC. 9-06.5(1)
FASTENER GALVANIZING	AASHTO M 232
STEEL GRATING	ASTM A 36
WIRE ROPE	ASTM A 603 W/ CLASS A WEIGHT ZINC COATED WIRES THROUGHOUT

MAINTENANCE WALKWAY INSTALLED ON MONOTUBE OVERHEAD SIGN STRUCTURE

(WALKWAYS MAY BE USED WITH OTHER LAYOUTS THAN THAT SHOWN ABOVE)

NOTES

1. NOT INTENDED FOR USE IN FRONT OF STATIC SIGNS.
2. FOR MAINTENANCE WALKWAY, RAILING, GRATING, AND TOE PLATE DETAILS, SEE STANDARD PLAN G-6.
3. USE TWO LANYARDS THROUGH INTERMEDIATE WIRE ROPE SUPPORT.
4. 3/8" DIAM. WIRE ROPE WITH 14 KIPS MIN. BREAKING STRENGTH. THE WIRE ROPE SHALL BE INSTALLED WITH 450 LBS. OF TENSION, AND WITH 6" OF TAKE UP ADJUSTMENT AVAILABLE IN THE TURNBUCKLE.

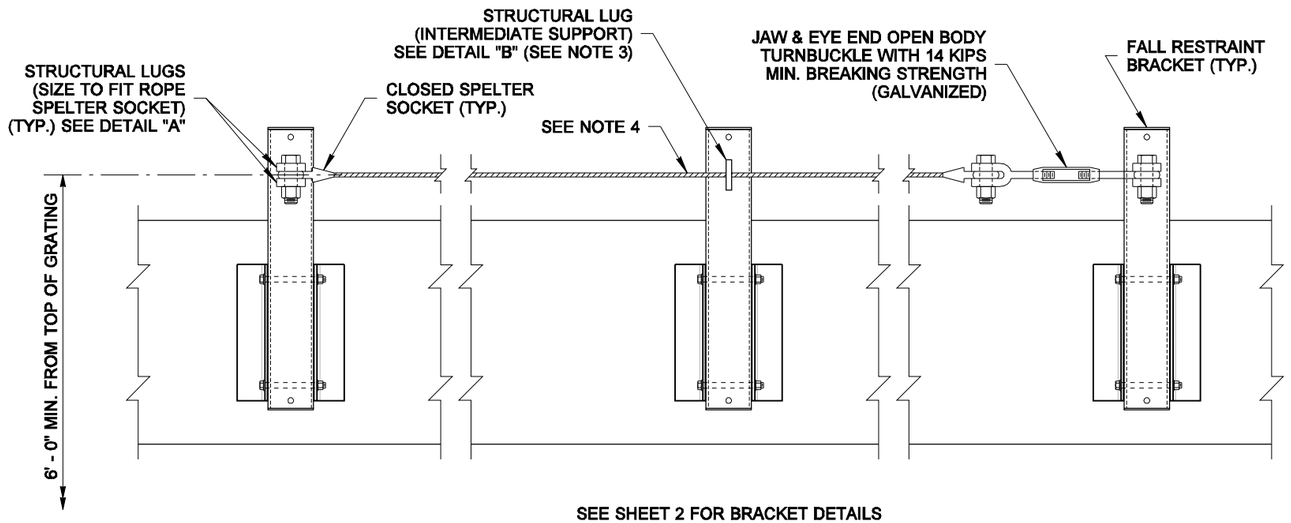

SEE SHEET 2 FOR BRACKET DETAILS

FALL RESTRAINT

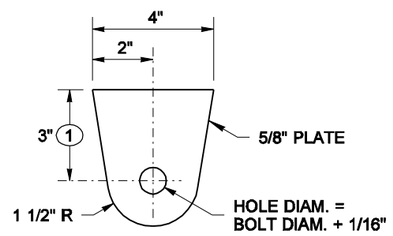

1 5" WHEN AN INTERMEDIATE SUPPORT IS USED

DETAIL "A"

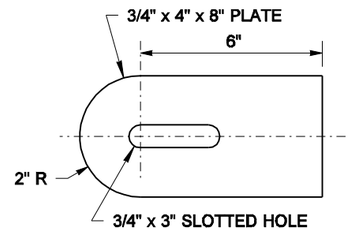

DETAIL "B"

RICHARD P. ZELDENRUST
STATE OF WASHINGTON
25470
REGISTERED
PROFESSIONAL ENGINEER

EXPIRES NOVEMBER 14, 2004

NOTE: THIS PLAN IS NOT A LEGAL ENGINEERING DOCUMENT BUT AN ELECTRONIC DUPLICATE. THE ORIGINAL, SIGNED BY THE ENGINEER AND APPROVED FOR PUBLICATION, IS KEPT ON FILE AT THE WASHINGTON STATE DEPARTMENT OF TRANSPORTATION. A COPY MAY BE OBTAINED UPON REQUEST.

MAINTENANCE WALKWAY MOUNTING FOR MONOTUBE OVERHEAD SIGN STRUCTURE

STANDARD PLAN G-6a

SHEET 1 OF 3 SHEETS

APPROVED FOR PUBLICATION

Harold J. Peterfeso — STATE DESIGN ENGINEER — *08-27-03* — DATE

Washington State Department of Transportation

EFFECTIVE: APRIL 2, 2007 TO JANUARY 6, 2008
EFFECTIVE: APRIL 2, 2007 TO JANUARY 6, 2008

EFFECTIVE: APRIL 2, 2007 TO JANUARY 6, 2008

DRAWN BY: MARK SUJKA

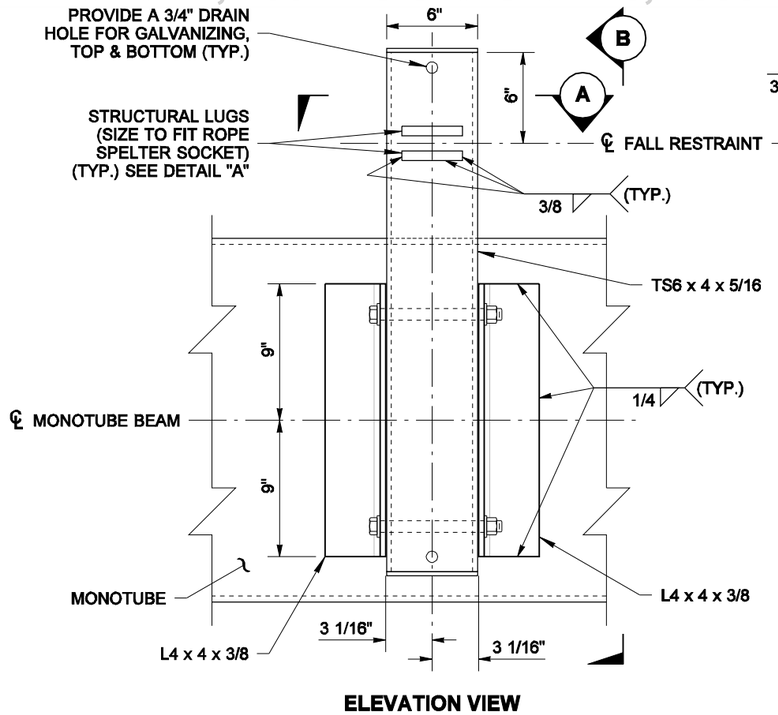

ELEVATION VIEW

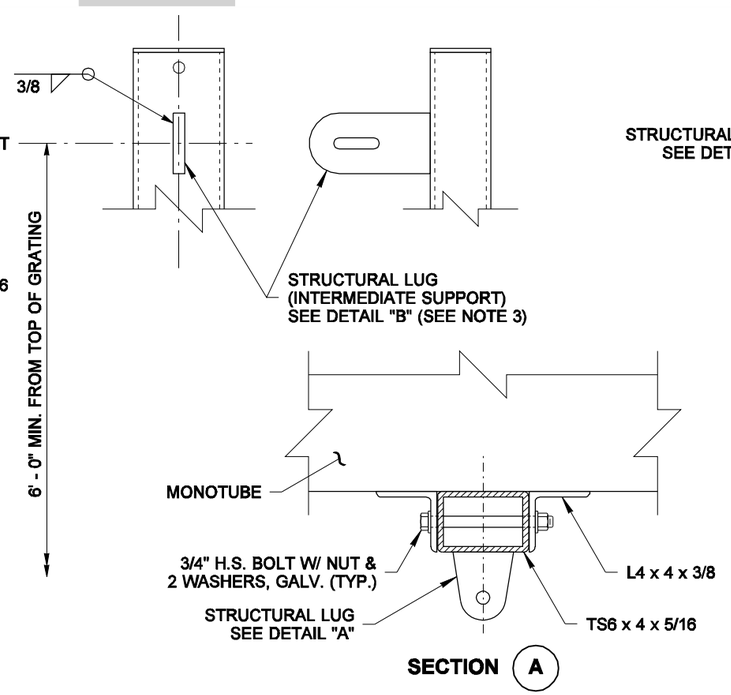

SECTION (A)

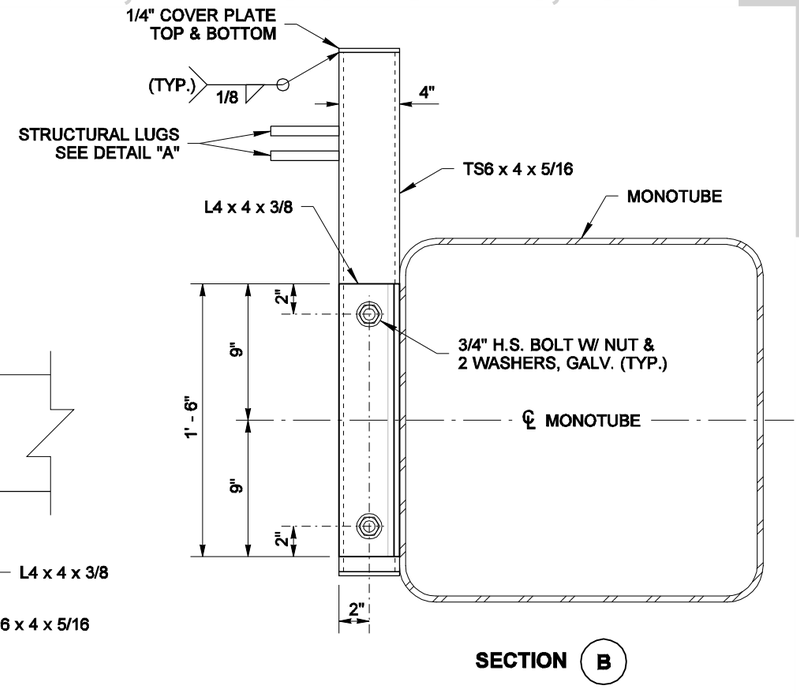

SECTION (B)

FALL RESTRAINT BRACKET INSTALLATION ON NEW MONOTUBE SIGN STRUCTURE

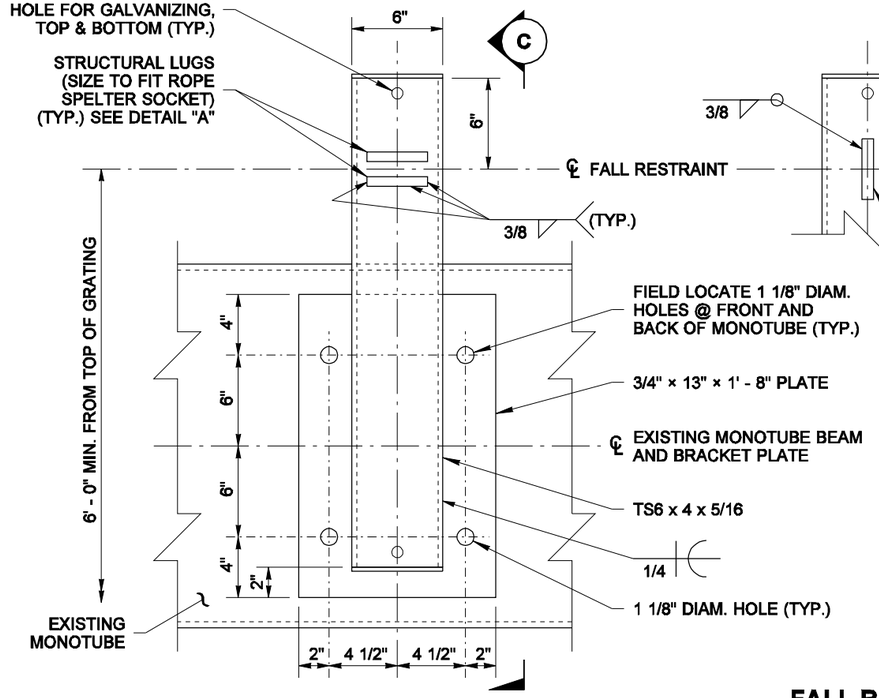

ELEVATION VIEW

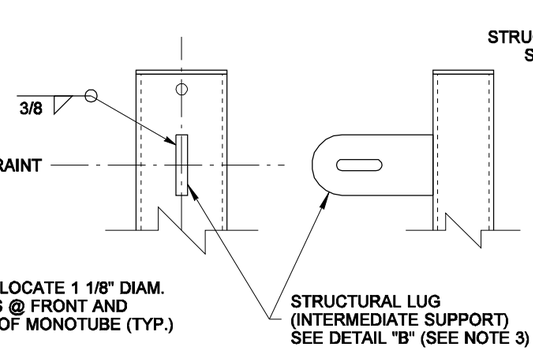

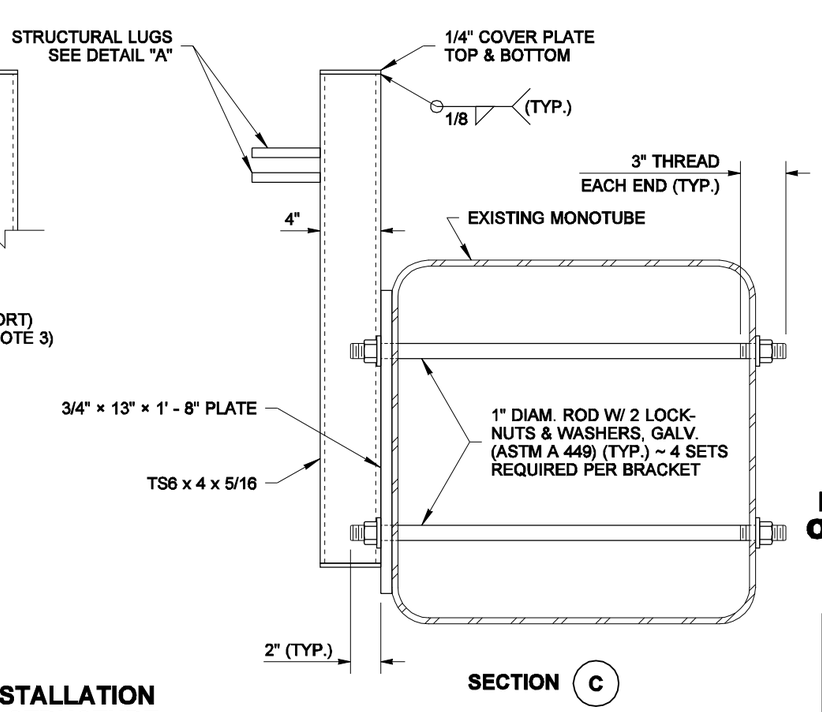

SECTION (C)

FALL RESTRAINT BRACKET INSTALLATION ON EXISTING MONOTUBE SIGN STRUCTURE

RICHARD P. ZELDENRUST
STATE OF WASHINGTON
25470
REGISTERED
PROFESSIONAL ENGINEER

EXPIRES NOVEMBER 14, 2004

NOTE: THIS PLAN IS NOT A LEGAL ENGINEERING DOCUMENT BUT AN ELECTRONIC DUPLICATE. THE ORIGINAL, SIGNED BY THE ENGINEER AND APPROVED FOR PUBLICATION, IS KEPT ON FILE AT THE WASHINGTON STATE DEPARTMENT OF TRANSPORTATION. A COPY MAY BE OBTAINED UPON REQUEST.

MAINTENANCE WALKWAY MOUNTING FOR MONOTUBE OVERHEAD SIGN STRUCTURE

STANDARD PLAN G-6a

SHEET 2 OF 3 SHEETS

APPROVED FOR PUBLICATION

Harold J. Peterfeso — STATE DESIGN ENGINEER — *08-27-03* — DATE

Washington State Department of Transportation

EFFECTIVE: APRIL 2, 2007 TO JANUARY 6, 2008

EFFECTIVE: APRIL 2, 2007 TO JANUARY 6, 2008

DRAWN BY: MARK SUJKA

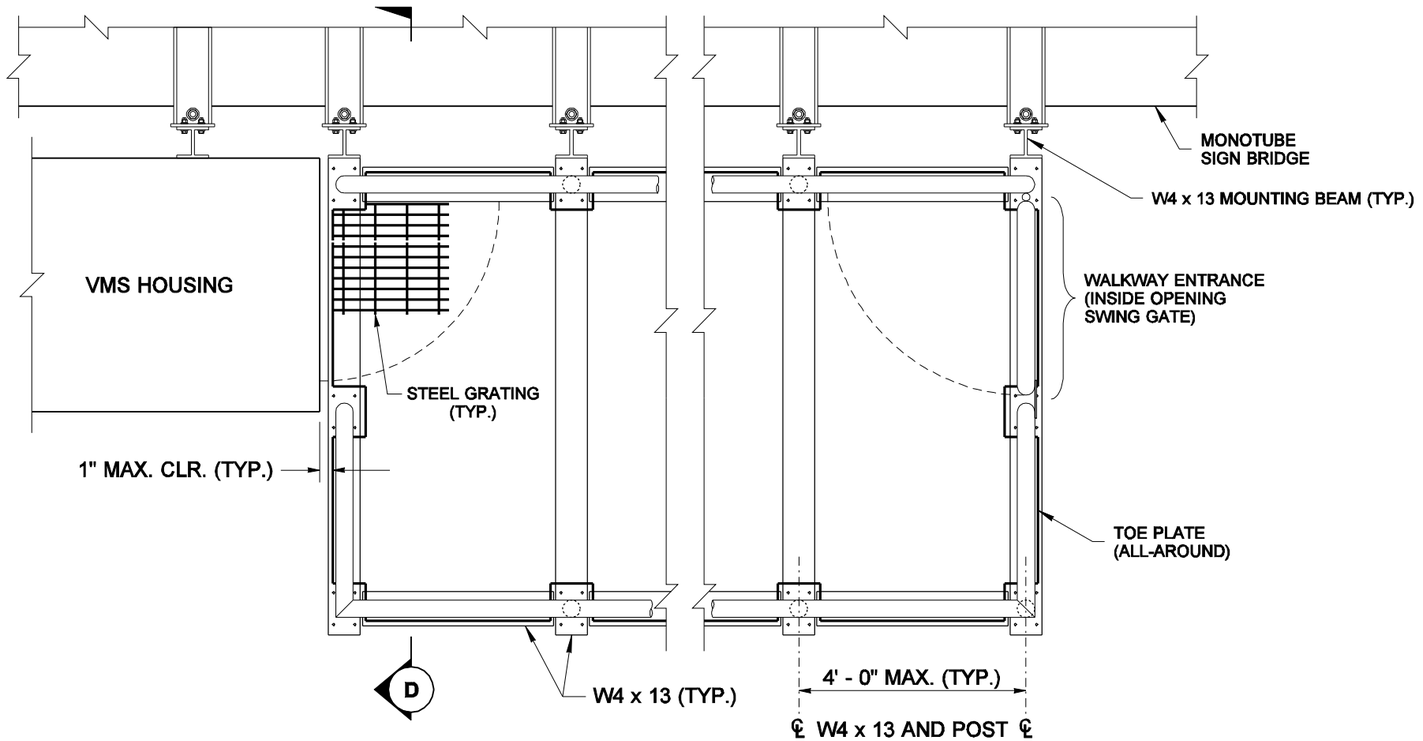

MAINTENANCE WALKWAY

PARTIAL PLAN

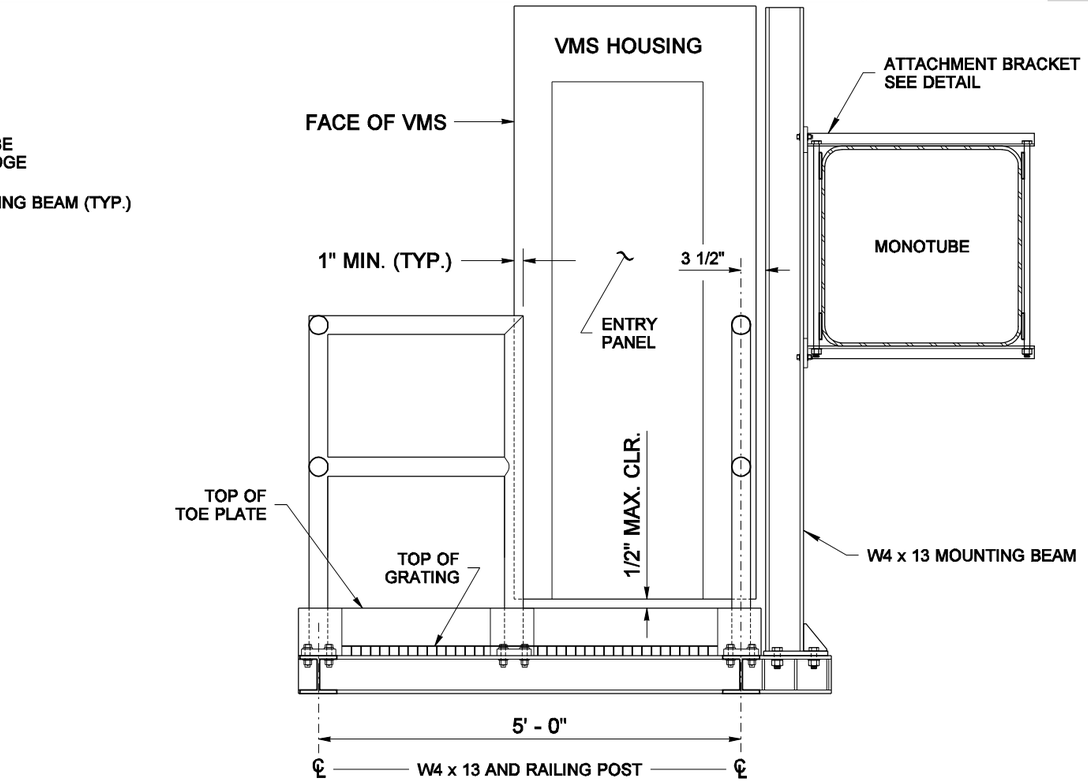

SECTION (D)

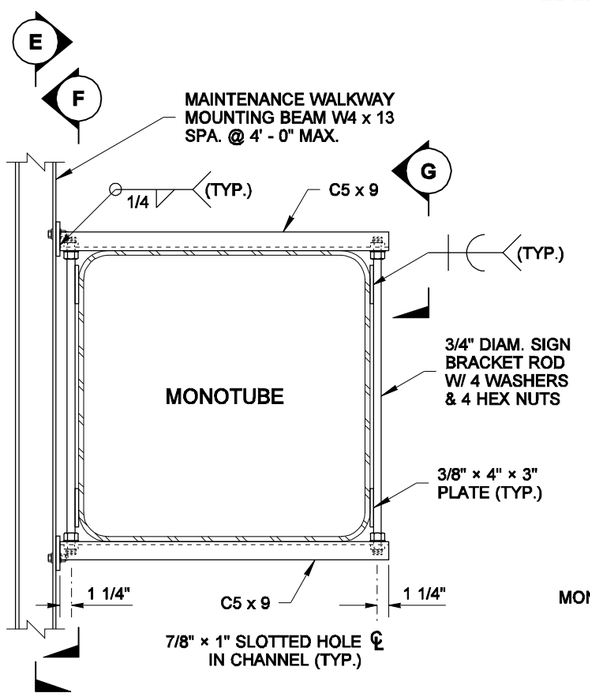

ATTACHMENT BRACKET DETAIL

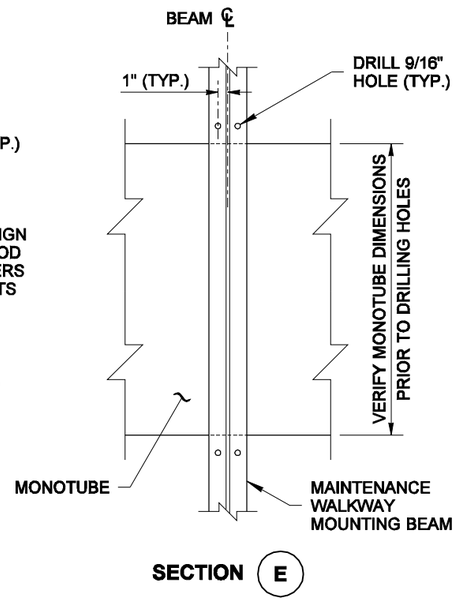

SECTION (E)

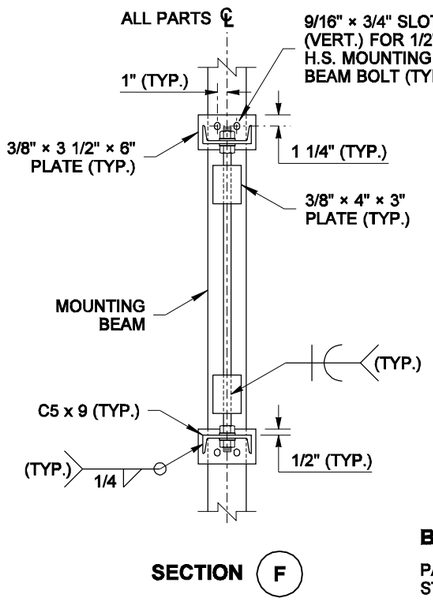

SECTION (F)

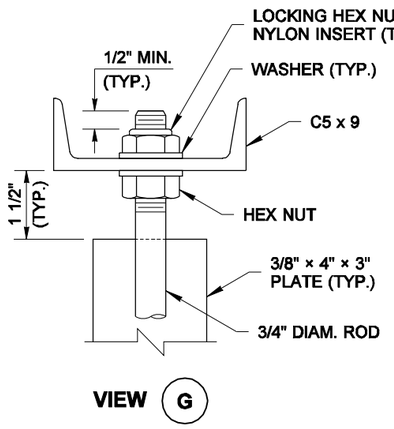

VIEW (G)

BRACKET NOTES

PAINT ENTIRE ATTACHMENT BRACKET TO MATCH EXISTING STRUCTURE EXCEPT FOR MOUNTING BEAM.

SIGN, LIGHT, BEAM LENGTHS, SIZE AND SPACING SHALL BE DETERMINED FROM THE CONTRACT PLANS OR WSDOT STANDARD PLANS.

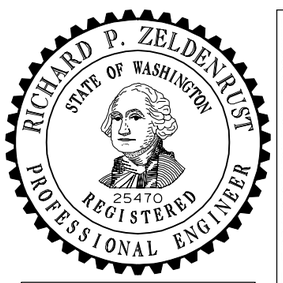

EXPIRES NOVEMBER 14, 2004

NOTE: THIS PLAN IS NOT A LEGAL ENGINEERING DOCUMENT BUT AN ELECTRONIC DUPLICATE. THE ORIGINAL, SIGNED BY THE ENGINEER AND APPROVED FOR PUBLICATION, IS KEPT ON FILE AT THE WASHINGTON STATE DEPARTMENT OF TRANSPORTATION. A COPY MAY BE OBTAINED UPON REQUEST.

MAINTENANCE WALKWAY MOUNTING FOR MONOTUBE OVERHEAD SIGN STRUCTURE

STANDARD PLAN G-6a

SHEET 3 OF 3 SHEETS

APPROVED FOR PUBLICATION

Harold J. Peterfeso — STATE DESIGN ENGINEER

08-27-03 — DATE

Washington State Department of Transportation

EFFECTIVE: APRIL 2, 2007 TO JANUARY 6, 2008

EFFECTIVE: APRIL 2, 2007 TO JANUARY 6, 2008

EFFECTIVE: APRIL 2, 2007 TO JANUARY 6, 2008

DRAWN BY: MARK SUJKA

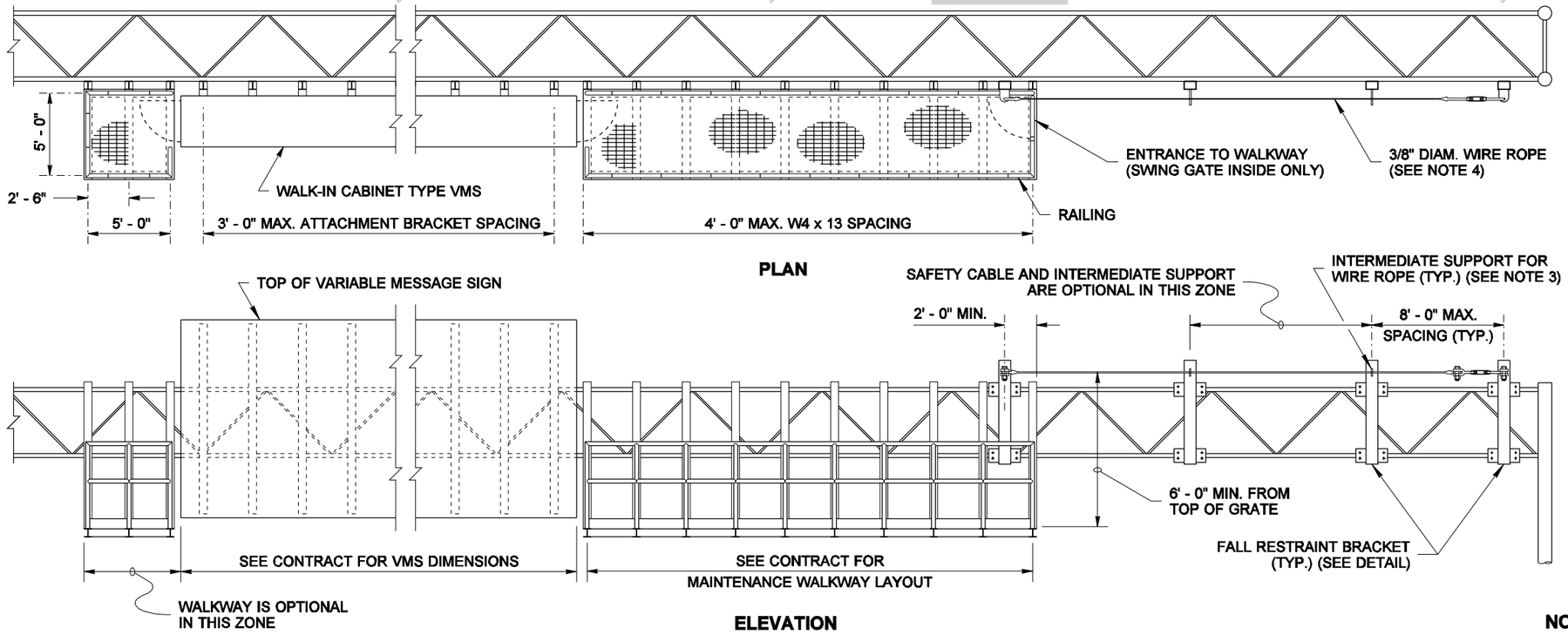

MAINTENANCE WALKWAY INSTALLED ON TRUSS-TYPE OVERHEAD SIGN STRUCTURE

(WALKWAYS MAY BE USED WITH OTHER LAYOUTS THAN THAT SHOWN ABOVE)

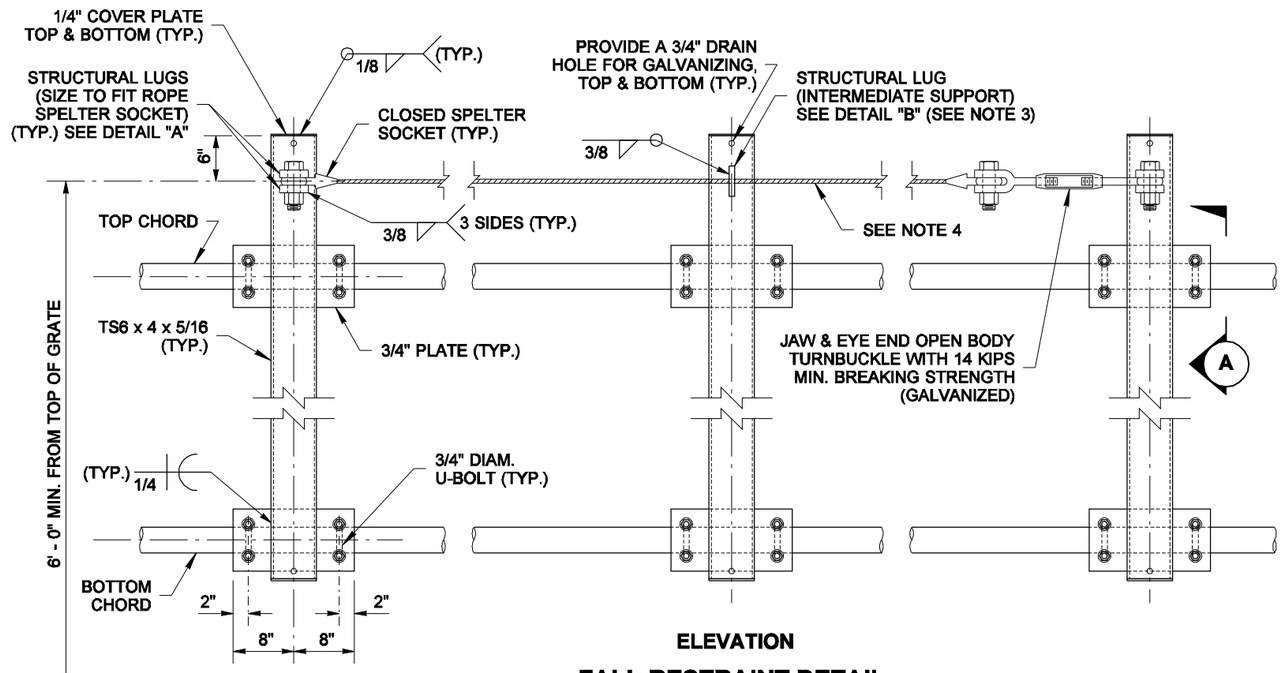

FALL RESTRAINT DETAIL

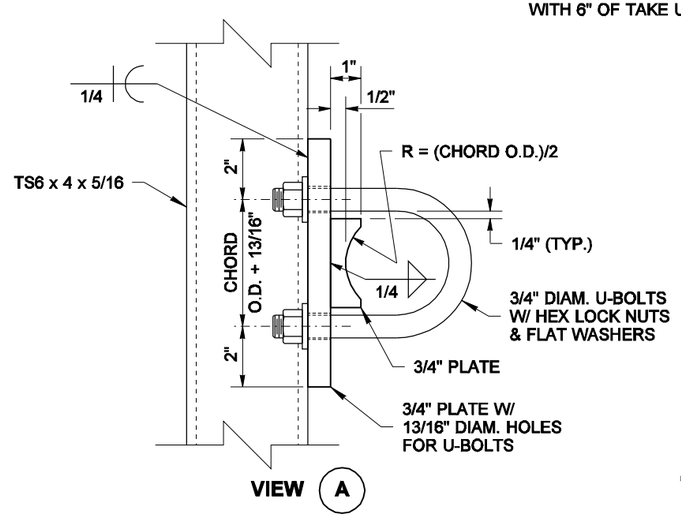

MATERIAL SPECIFICATIONS	
PIPE	ASTM A 36 OR ASTM A 53 GRADE B, TYPE E OR S, OR ASTM A 500 GRADE B
PLATES AND SHAPES	ASTM A 36
STRUCTURAL TUBING	ASTM A 500 GRADE B
GALVANIZING FOR PIPE PLATES AND SHAPES	AASHTO M 111
HIGH STRENGTH BOLTS, NUTS, & WASHERS; INCL. MOUNTING BEAM BOLTS	STD SPEC. 9-06.5(3)
ALL OTHER BOLTS	STD SPEC. 9-06.5(1)
FASTENER GALVANIZING	AASHTO M 232
STEEL GRATING	ASTM A 36
WIRE ROPE	ASTM A 603 W/ CLASS A WEIGHT ZINC COATED WIRES THROUGHOUT
U-BOLTS, NUTS, AND WASHERS	ASTM F 593 AND ASTM F 594, TYPE 304

NOTES

1. NOT INTENDED FOR USE IN FRONT OF STATIC SIGNS.
2. FOR MAINTENANCE WALKWAY, RAILING, GRATING, AND TOE PLATE DETAILS, SEE STANDARD PLAN G-6.
3. USE TWO LANYARDS THROUGH INTERMEDIATE WIRE ROPE SUPPORT.
4. 3/8" DIAM. WIRE ROPE WITH 14 KIPS MIN. BREAKING STRENGTH. THE WIRE ROPE SHALL BE INSTALLED WITH 450 LBS. OF TENSION, AND WITH 6" OF TAKE UP ADJUSTMENT AVAILABLE IN THE TURNBUCKLE.

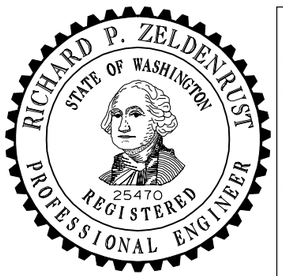

EXPIRES NOVEMBER 14, 2004

NOTE: THIS PLAN IS NOT A LEGAL ENGINEERING DOCUMENT BUT AN ELECTRONIC DUPLICATE. THE ORIGINAL, SIGNED BY THE ENGINEER AND APPROVED FOR PUBLICATION, IS KEPT ON FILE AT THE WASHINGTON STATE DEPARTMENT OF TRANSPORTATION. A COPY MAY BE OBTAINED UPON REQUEST.

MAINTENANCE WALKWAY MOUNTING FOR TRUSS-TYPE OVERHEAD SIGN STRUCTURE

STANDARD PLAN G-6b

SHEET 1 OF 2 SHEETS

APPROVED FOR PUBLICATION

Harold J. Peterfeso — STATE DESIGN ENGINEER

08-27-03 — DATE

Washington State Department of Transportation

EFFECTIVE: APRIL 2, 2007 TO JANUARY 6, 2008

EFFECTIVE: APRIL 2, 2007 TO JANUARY 6, 2008

EFFECTIVE: APRIL 2, 2007 TO JANUARY 6, 2008

DRAWN BY: MARK SUJKA

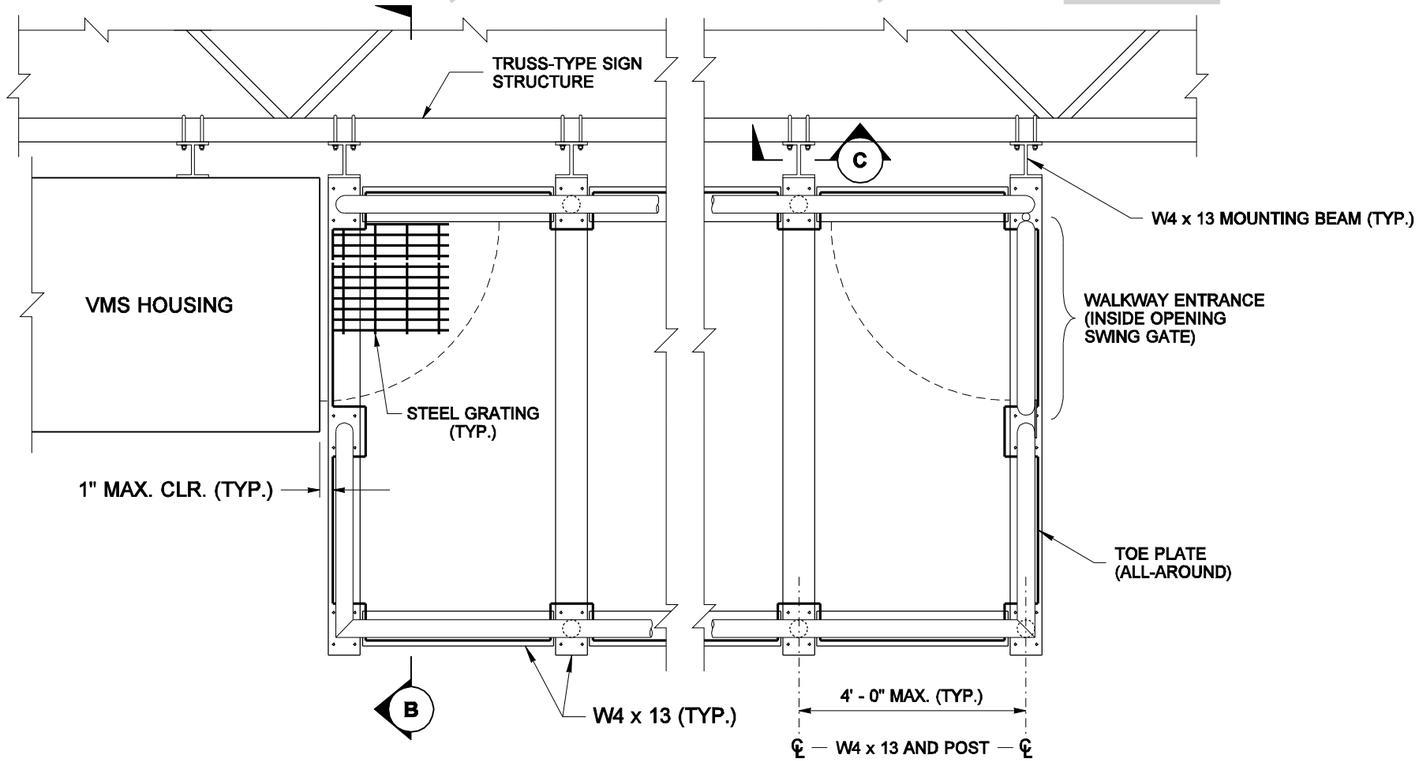

MAINTENANCE WALKWAY
PARTIAL PLAN

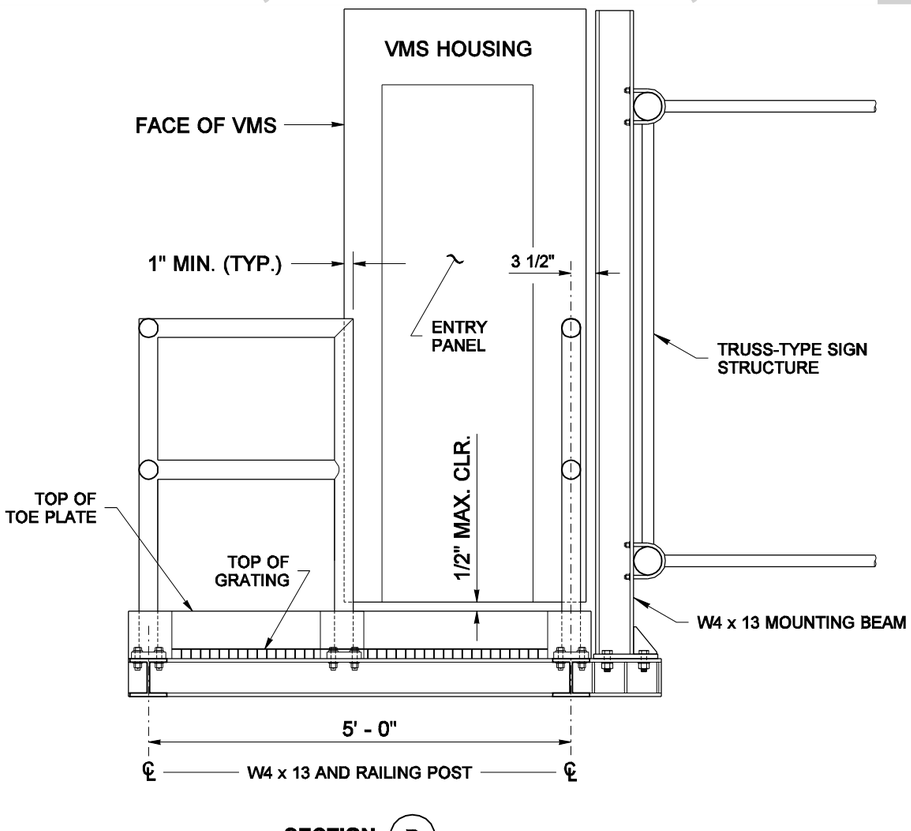

SECTION (B)

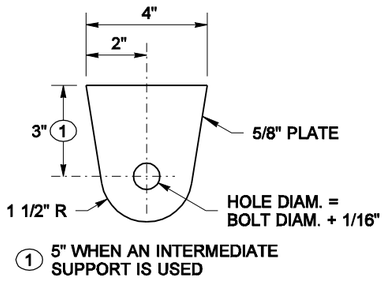

DETAIL "A"

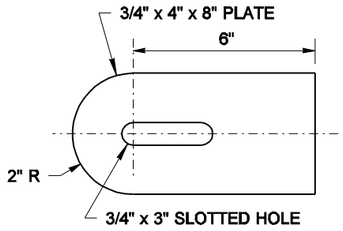

DETAIL "B"

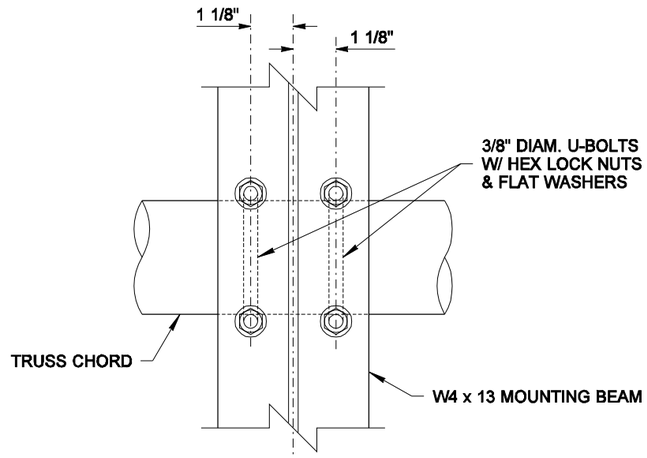

SECTION (C)

RICHARD P. ZELDENRUST
STATE OF WASHINGTON
25470
REGISTERED
PROFESSIONAL ENGINEER

EXPIRES NOVEMBER 14, 2004

NOTE: THIS PLAN IS NOT A LEGAL ENGINEERING DOCUMENT BUT AN ELECTRONIC DUPLICATE. THE ORIGINAL, SIGNED BY THE ENGINEER AND APPROVED FOR PUBLICATION, IS KEPT ON FILE AT THE WASHINGTON STATE DEPARTMENT OF TRANSPORTATION. A COPY MAY BE OBTAINED UPON REQUEST.

MAINTENANCE WALKWAY MOUNTING FOR TRUSS-TYPE OVERHEAD SIGN STRUCTURE

STANDARD PLAN G-6b

SHEET 2 OF 2 SHEETS

APPROVED FOR PUBLICATION

Harold J. Peterfeso — STATE DESIGN ENGINEER

08-27-03 — DATE

Washington State Department of Transportation

EFFECTIVE: APRIL 2, 2007 TO JANUARY 6, 2008

EFFECTIVE: APRIL 2, 2007 TO JANUARY 6, 2008

DRAWN BY: MARK SUJKA

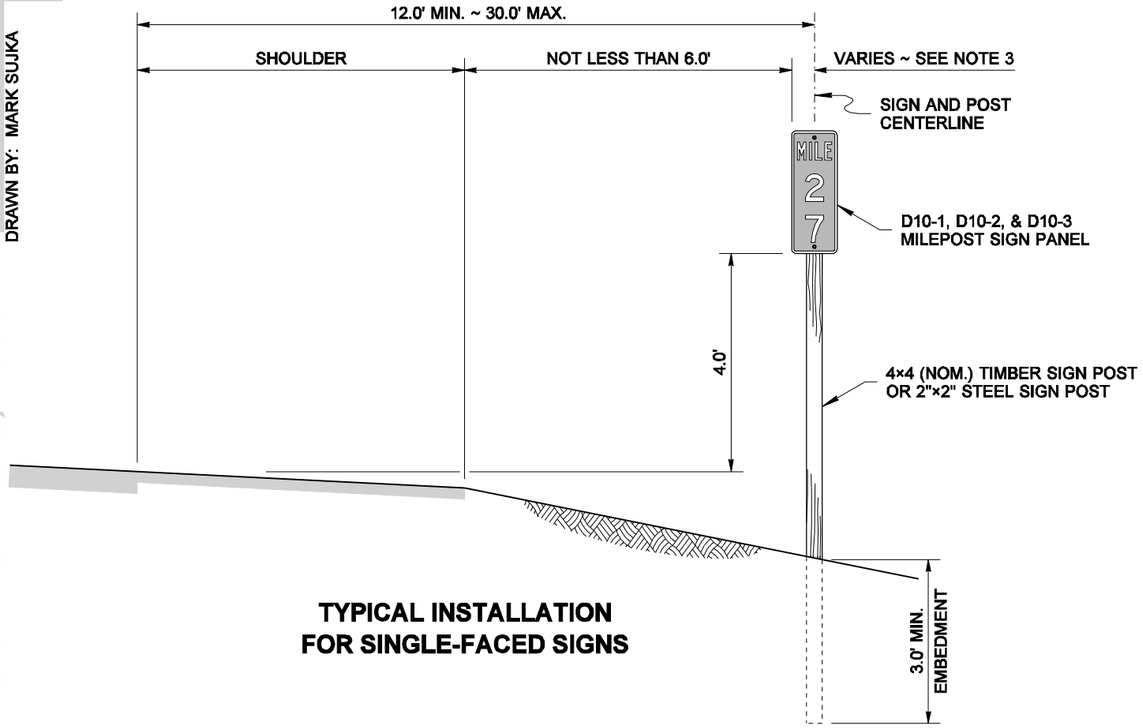

TYPICAL INSTALLATION FOR SINGLE-FACED SIGNS

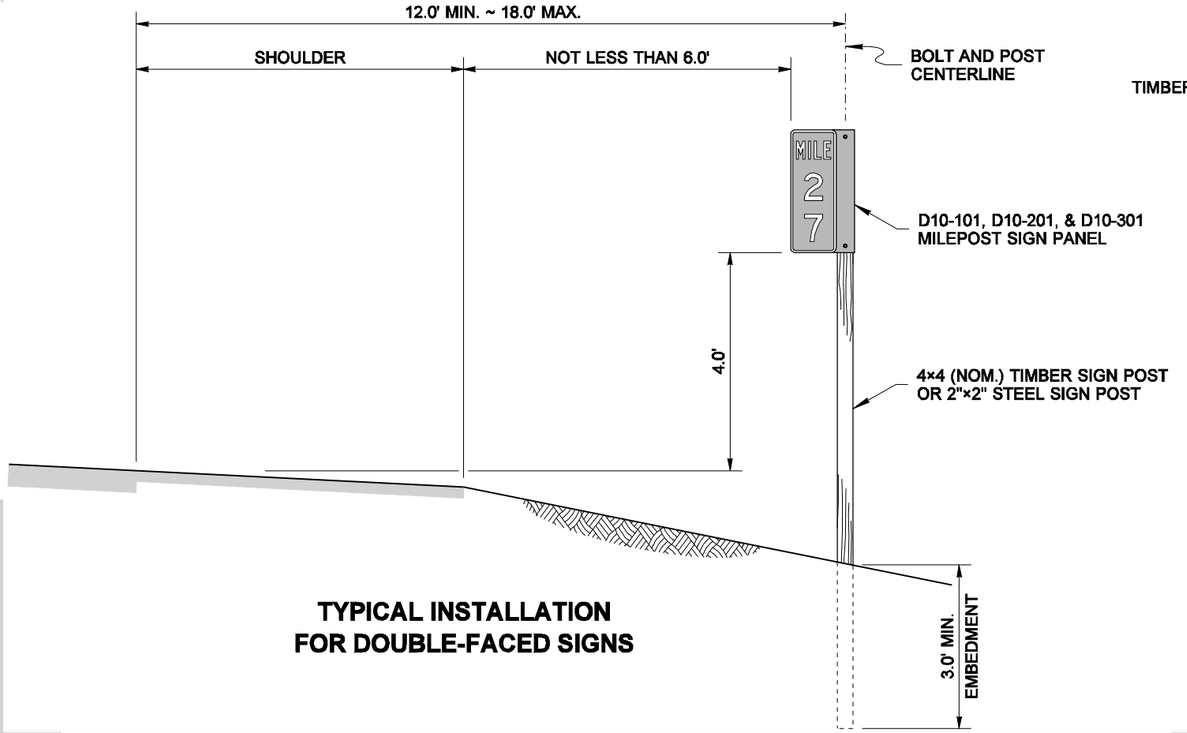

TYPICAL INSTALLATION FOR DOUBLE-FACED SIGNS

NOTES

1. Attach the Milepost Sign Panel to a timber sign post using two 3/8" diameter lag bolts, with washers; see Standard Plan G-4a. For post and attachment details on steel sign posts, see Standard Plan G-8f, Type ST-1.
2. Provide Supplemental Plaques and install on Mileposts where indicated in the Contract.
3. See the Contract for the width of the Single-Faced Milepost Signs required (10" or 12").
4. For lateral installations behind traffic barrier, 6" high curbs, and ditches, see Standard Plan G-1.
5. Install at the locations shown in the Contract. Installation may be moved 50 feet or less (longitudinally) before or after the contract location if obstructions are encountered, or to utilize the post of another sign. Mileposts that cannot be placed within this degree of accuracy shall be omitted entirely.

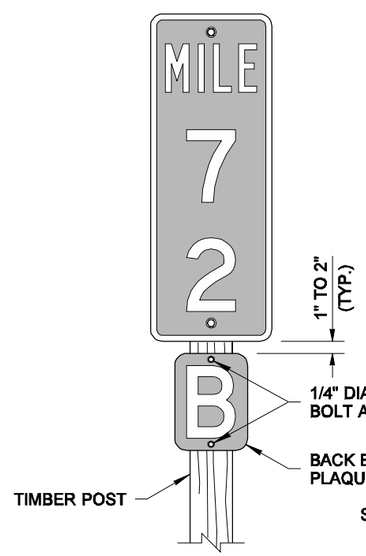

SINGLE-FACED SIGN

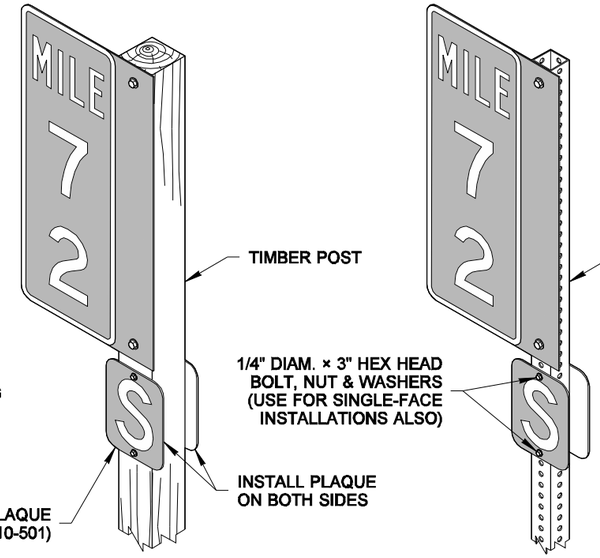

DOUBLE-FACED SIGN

SUPPLEMENTAL PLAQUE ~ MOUNTING DETAIL

SEE NOTE 2

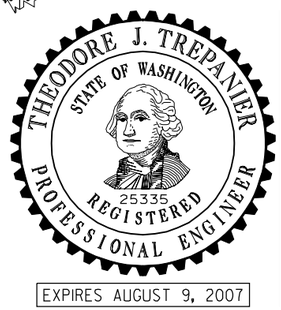

EXPIRES AUGUST 9, 2007

NOTE: THIS PLAN IS NOT A LEGAL ENGINEERING DOCUMENT BUT AN ELECTRONIC DUPLICATE. THE ORIGINAL, SIGNED BY THE ENGINEER AND APPROVED FOR PUBLICATION, IS KEPT ON FILE AT THE WASHINGTON STATE DEPARTMENT OF TRANSPORTATION. A COPY MAY BE OBTAINED UPON REQUEST.

MILEPOST

STANDARD PLAN G-7

SHEET 1 OF 1 SHEET

APPROVED FOR PUBLICATION

Harold J. Peterfeso — *06-08-06*

STATE DESIGN ENGINEER — DATE

Washington State Department of Transportation

EFFECTIVE: APRIL 2, 2007 TO JANUARY 6, 2008

EFFECTIVE: APRIL 2, 2007 TO JANUARY 6, 2008

DRAWN BY: MONIQUE GLICK

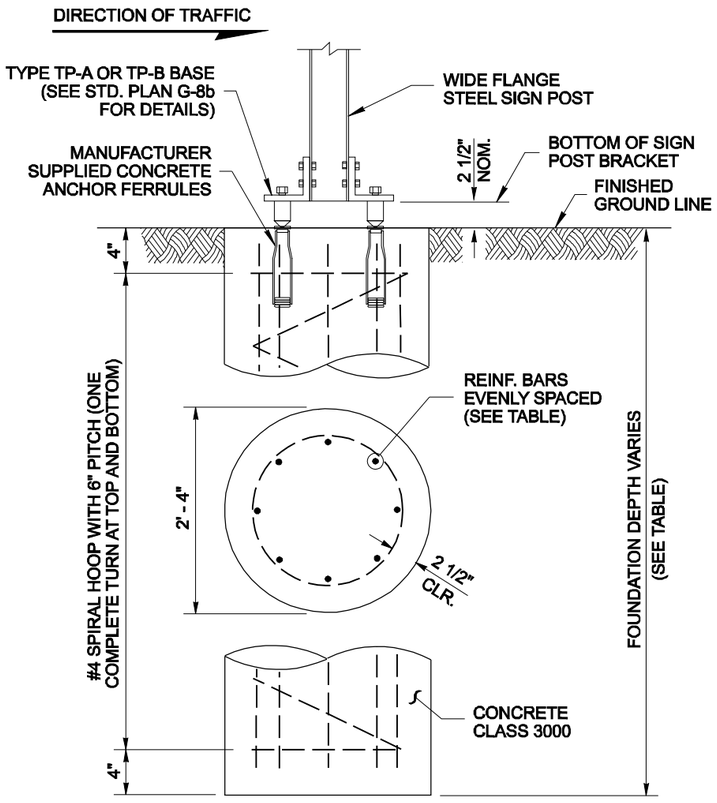

ELEVATION VIEW

TYPE TP-A & TYPE TP-B FOUNDATION

TYPE TP-A & TYPE TP-B FOUNDATION TABLE					
POST SIZE		MAX. XYZ		VERTICAL REBAR	FND. DEPTH ⟨1⟩
ASTM A 36	ASTM A 992	2 POST	3 POST		
W6 x 12	W6 x 9	1570	2355	8 ~ # 5	4' - 0"
W6 x 16	W6 x 12	2340	3510	8 ~ # 5	5' - 0"
W8 x 21	W8 x 18	4120	6180	8 ~ # 6	7' - 0"
W10 x 26	W10 x 22	6320	9480	8 ~ # 7	8' - 0"
W12 x 30	W12 x 26	8700	—	8 ~ # 7	9' - 0"

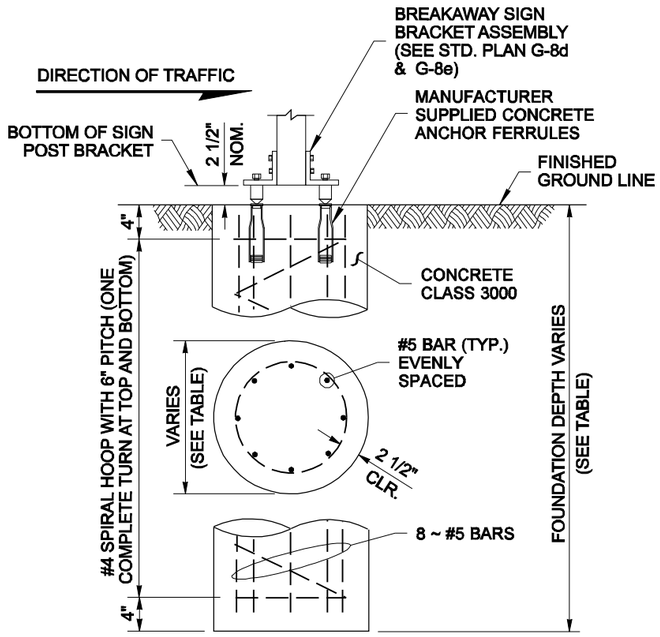

ELEVATION VIEW

TYPE AS & TYPE AP FOUNDATION

TYPE AS FOUNDATION TABLE			
POST SIZE	MAX. XYZ	FND. DIAM.	FND. DEPTH ⟨1⟩
4" SQ.	250	18"	4' - 0"
5" SQ.	300	24"	4' - 0"
6" SQ.	350	24"	4' - 0"
7" SQ.	400	28"	5' - 0"
8" SQ.	450	28"	5' - 0"

TYPE AP FOUNDATION TABLE			
POST SIZE	MAX. XYZ	FND. DIAM.	FND. DEPTH ⟨1⟩
2 1/2" DIAM.	225	18"	3' - 6"
3" DIAM.	250	18"	4' - 0"
3 1/2" DIAM.	275	24"	4' - 0"
4" DIAM.	300	24"	4' - 0"

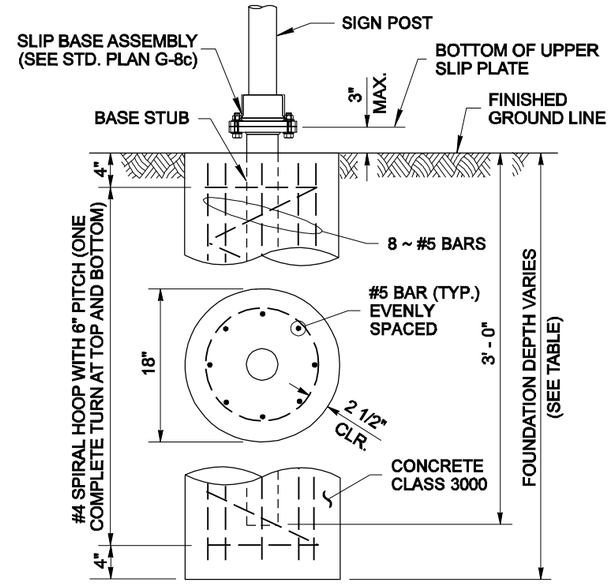

ELEVATION VIEW

TYPE PL, TYPE PL-T & TYPE PL-U FOUNDATION

TYPE PL, TYPE PL-T & TYPE PL-U FOUNDATION TABLE	
MAX. XYZ	FND. DEPTH ⟨1⟩
225	3' - 6"
265	4' - 0"
300	4' - 6"
600 ⟨2⟩	4' - 6"

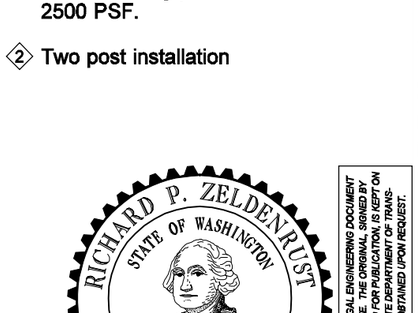

PLAN VIEW

TYPE PL, TYPE PL-T & TYPE PL-U FOUNDATION

NOTE

Install conduit for Post-mounted Junction Box in the concrete foundation, when required. (See Standard Plan J-12, Sheet 2.)

KEY NOTES

⟨1⟩ Foundation depths based on allowable lateral bearing pressure in excess of 2500 PSF.

⟨2⟩ Two post installation

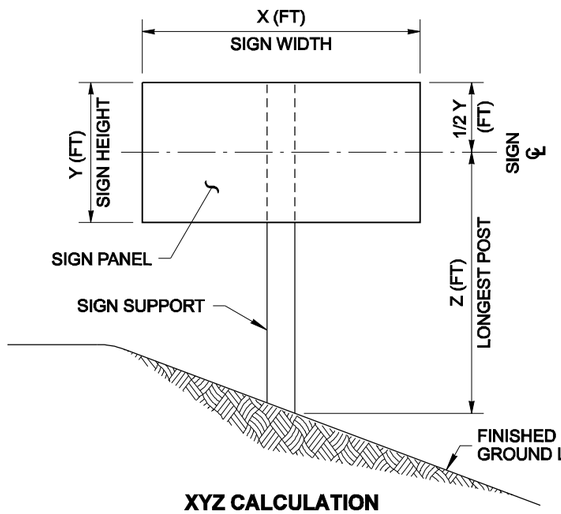

XYZ CALCULATION

$XYZ\ (FT^3) = X \times Y \times Z$

USED TO DETERMINE POST SIZE

~ SEE FOUNDATION TABLES

RICHARD P. ZELDENRUST
STATE OF WASHINGTON
25470
REGISTERED
PROFESSIONAL ENGINEER

EXPIRES NOVEMBER 14, 2006

NOTE: THIS PLAN IS NOT A LEGAL ENGINEERING DOCUMENT BUT AN ELECTRONIC DUPLICATE. THE ORIGINAL, SIGNED BY THE ENGINEER AND APPROVED FOR PUBLICATION, IS KEPT ON FILE AT THE WASHINGTON STATE DEPARTMENT OF TRANSPORTATION. A COPY MAY BE OBTAINED UPON REQUEST.

STEEL SIGN SUPPORT FOUNDATION DETAILS

STANDARD PLAN G-8a

SHEET 1 OF 1 SHEET

APPROVED FOR PUBLICATION

Harold J. Peterfeso — STATE DESIGN ENGINEER

12-15-04 — DATE

Washington State Department of Transportation

EFFECTIVE: APRIL 2, 2007 TO JANUARY 6, 2008

EFFECTIVE: APRIL 2, 2007 TO JANUARY 6, 2008

EFFECTIVE: APRIL 2, 2007 TO JANUARY 6, 2008

DRAWN BY: MONIQUE GLICK

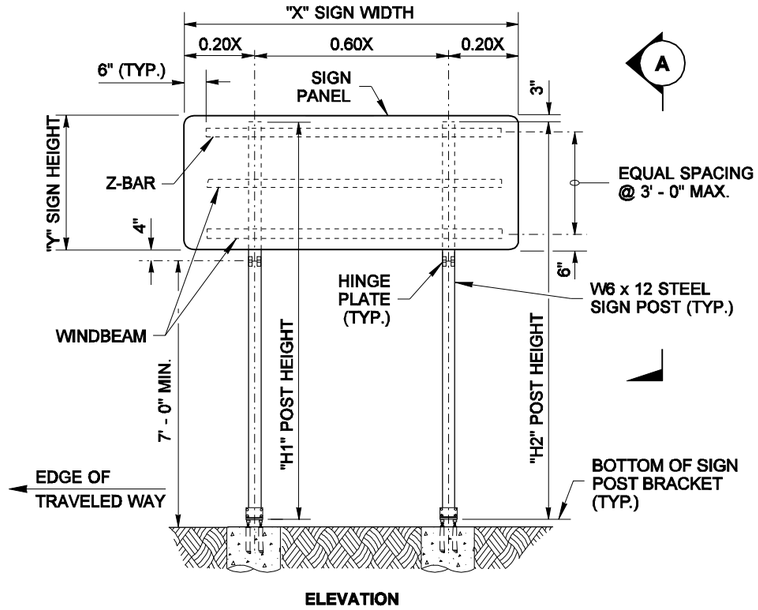

ELEVATION

TYPE TP-A OR TP-B SIGN SUPPORT

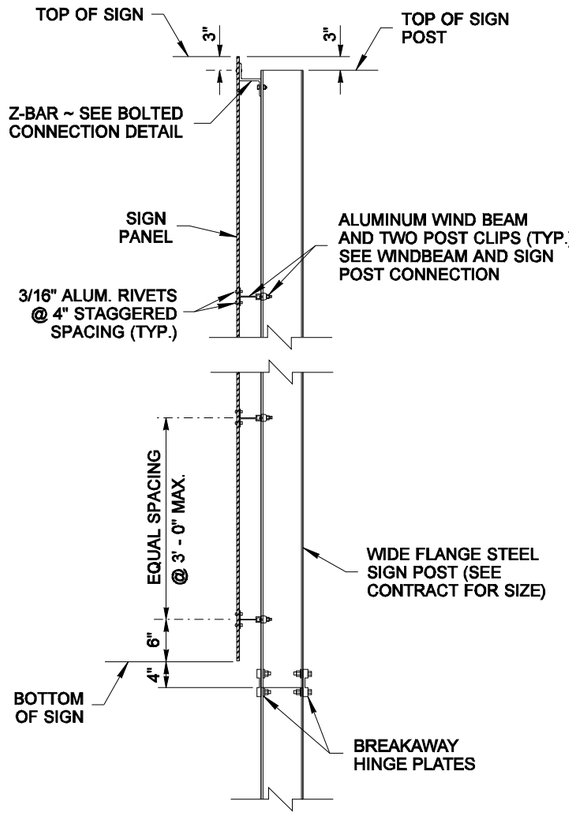

DETAIL (A)

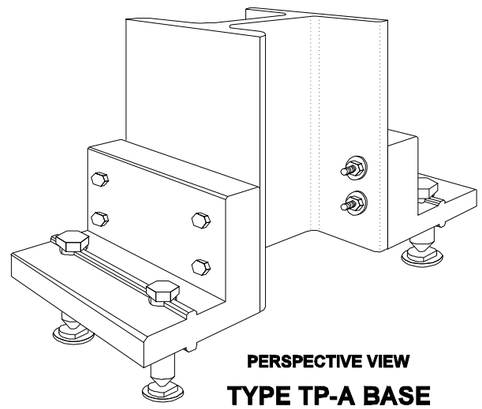

PERSPECTIVE VIEW

TYPE TP-A BASE

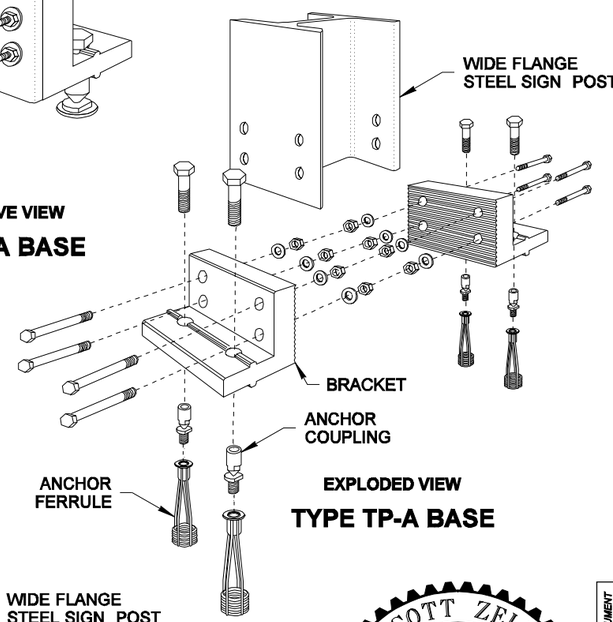

EXPLODED VIEW

TYPE TP-A BASE

NOTES

1. Dimensions for the parts used to assemble the base connections are intentionally not shown. Base connections are patented, manufactured products that are in compliance with NCHRP 350 crash test criteria. The base connection details are only shown on this plan to illustrate how the parts are assembled.
2. For Steel Sign Support Foundations, see Standard Plan G-8a.
3. For "X", "Y", "H1", "H2", and "H3", refer to the Sign Specification Sheet in the Contract.

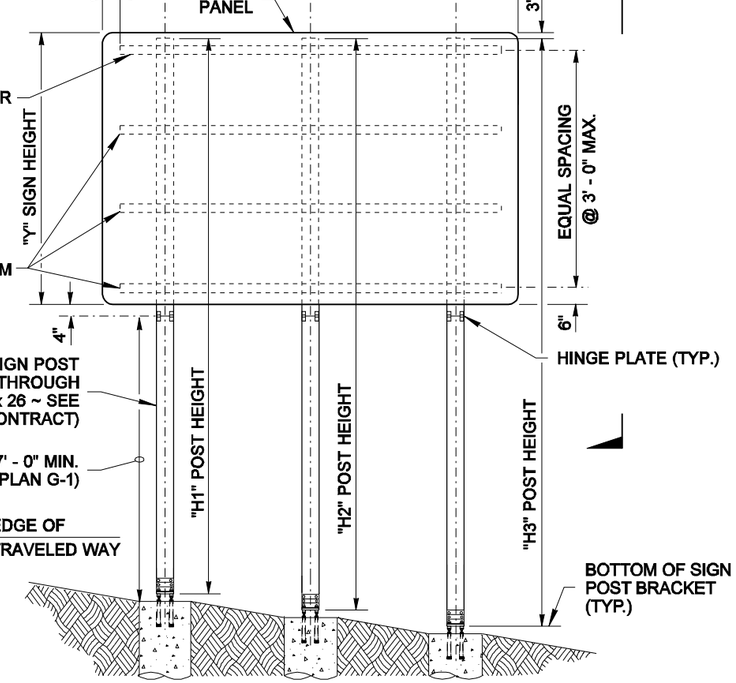

ELEVATION

TYPE TP-B SIGN SUPPORT

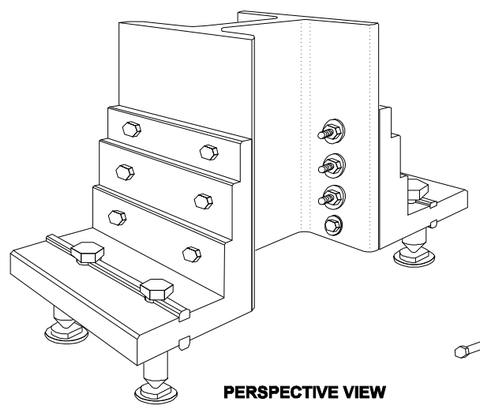

PERSPECTIVE VIEW

TYPE TP-B BASE

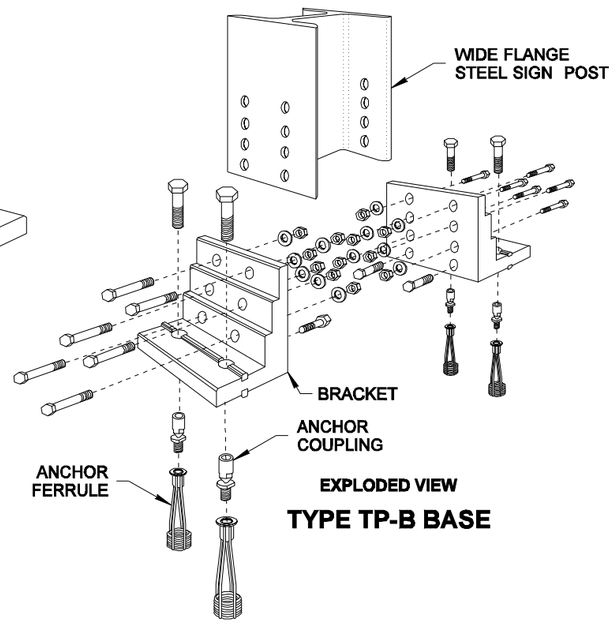

EXPLODED VIEW

TYPE TP-B BASE

R. SCOTT ZELLER
STATE OF WASHINGTON
28680
REGISTERED
PROFESSIONAL ENGINEER

EXPIRES MAY 5, 2007

NOTE: THIS PLAN IS NOT A LEGAL ENGINEERING DOCUMENT BUT AN ELECTRONIC DUPLICATE. THE ORIGINAL, SIGNED BY THE ENGINEER AND APPROVED FOR PUBLICATION, IS KEPT ON FILE AT THE WASHINGTON STATE DEPARTMENT OF TRANSPORTATION. A COPY MAY BE OBTAINED UPON REQUEST.

STEEL SIGN SUPPORT TYPES TP-A AND TP-B INSTALLATION DETAILS STANDARD PLAN G-8b

SHEET 1 OF 2 SHEETS

APPROVED FOR PUBLICATION

Harold J. Peterfeso — STATE DESIGN ENGINEER — *11-09-05* — DATE

Washington State Department of Transportation

EFFECTIVE: APRIL 2, 2007 TO JANUARY 6, 2008

EFFECTIVE: APRIL 2, 2007 TO JANUARY 6, 2008

EFFECTIVE: APRIL 2, 2007 TO JANUARY 6, 2008

EFFECTIVE: APRIL 2, 2007 TO JANUARY 6, 2008

DRAWN BY: MONIQUE GLICK

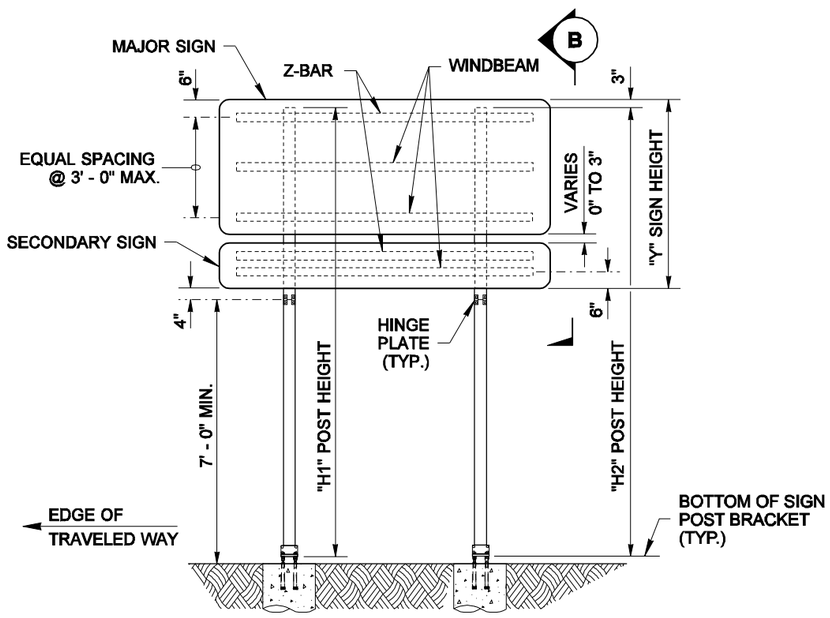

ELEVATION

MAJOR AND SECONDARY SIGN SUPPORT INSTALLATION

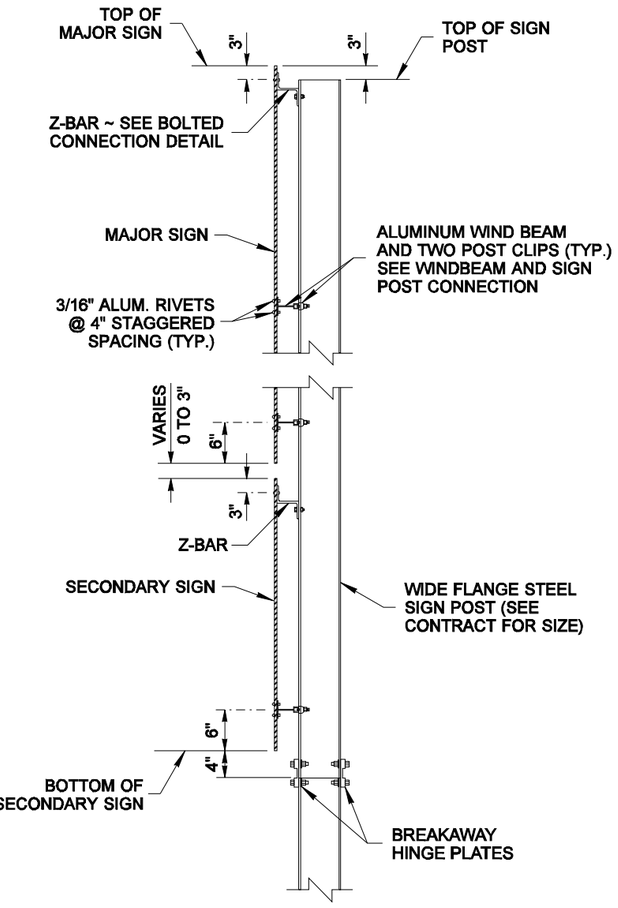

DETAIL (B)

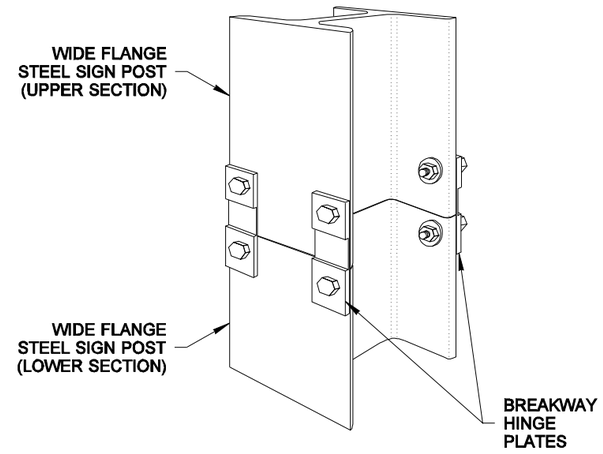

PERSPECTIVE VIEW

BREAKAWAY HINGE PLATE CONNECTION

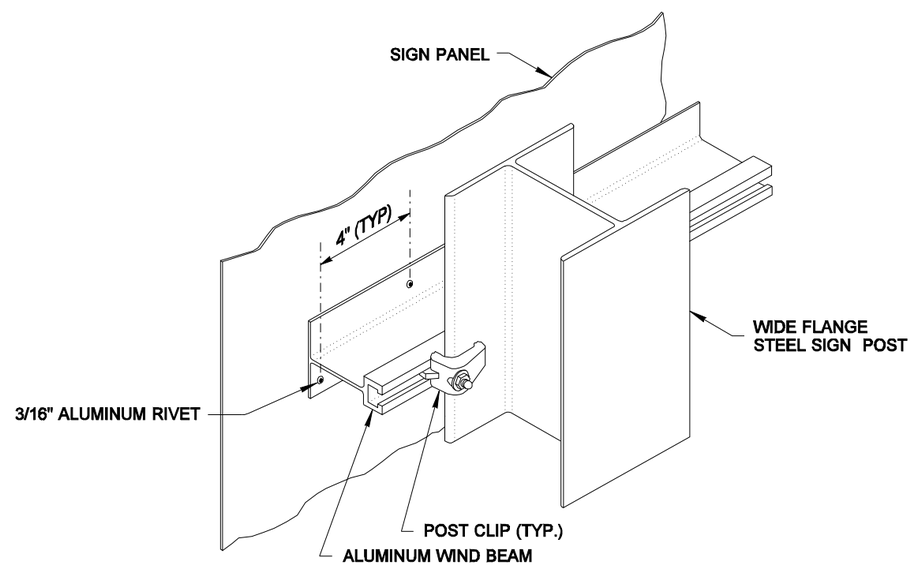

ISOMETRIC VIEW

WINDBEAM AND SIGN POST CONNECTION

ATTACH POST CLIPS ON BOTH SIDES OF WIDE FLANGE STEEL SIGN POST

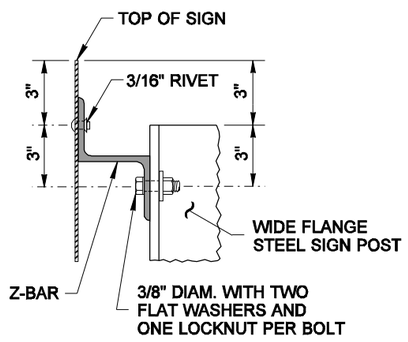

Z-BAR BOLTED CONNECTION DETAIL

BOLT ON ONE SIDE OF EACH WIDE FLANGE STEEL SIGN POST

R. SCOTT ZELLER
STATE OF WASHINGTON
28680
REGISTERED
PROFESSIONAL ENGINEER

EXPIRES MAY 5, 2007

NOTE: THIS PLAN IS NOT A LEGAL ENGINEERING DOCUMENT BUT AN ELECTRONIC DUPLICATE. THE ORIGINAL, SIGNED BY THE ENGINEER AND APPROVED FOR PUBLICATION, IS KEPT ON FILE AT THE WASHINGTON STATE DEPARTMENT OF TRANSPORTATION. A COPY MAY BE OBTAINED UPON REQUEST.

STEEL SIGN SUPPORT TYPES TP-A AND TP-B INSTALLATION DETAILS STANDARD PLAN G-8b

SHEET 2 OF 2 SHEETS

APPROVED FOR PUBLICATION

Harold J. Peterfeso — STATE DESIGN ENGINEER

11-09-05 — DATE

Washington State Department of Transportation

EFFECTIVE: APRIL 2, 2007 TO JANUARY 6, 2008

EFFECTIVE: APRIL 2, 2007 TO JANUARY 6, 2008

EFFECTIVE: APRIL 2, 2007 TO JANUARY 6, 2008

DRAWN BY: MONIQUE GLICK

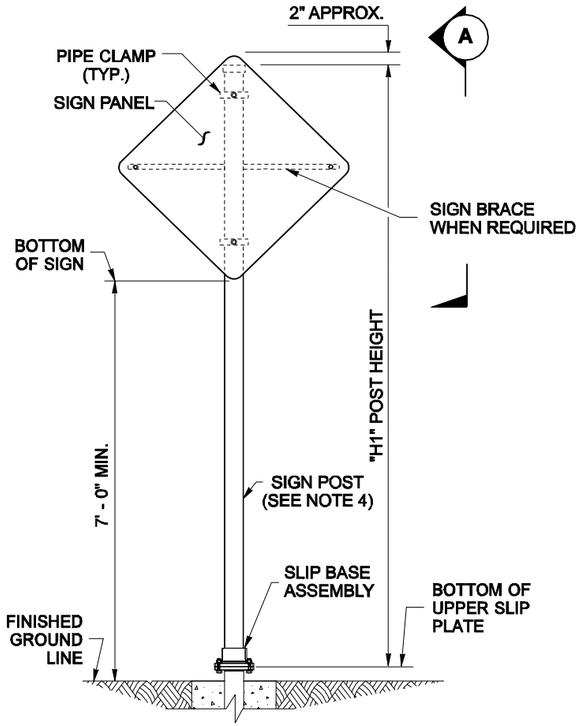

ELEVATION

TYPE PL SIGN SUPPORT

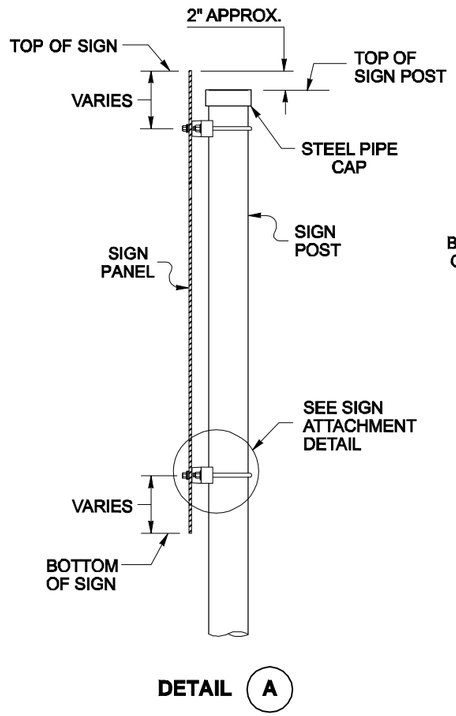

DETAIL A

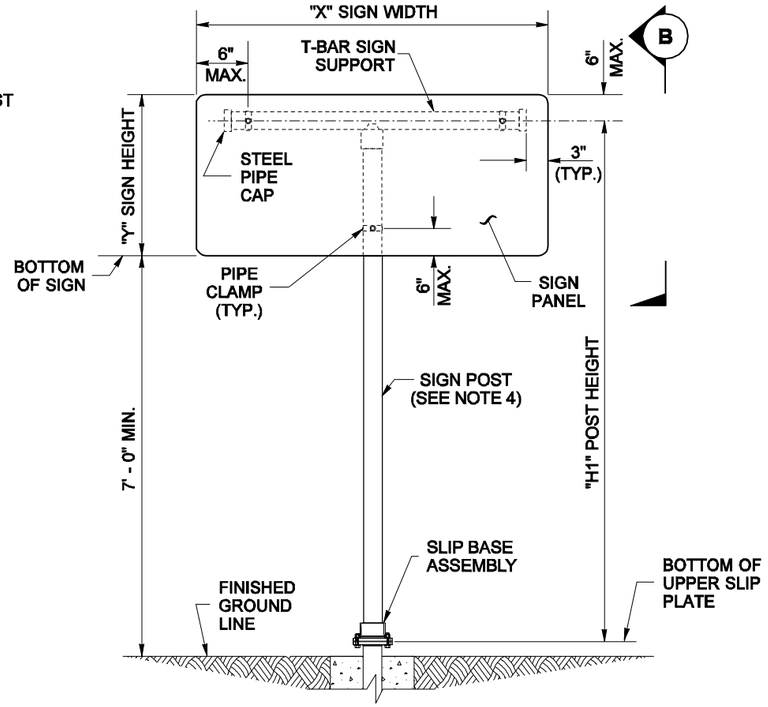

ELEVATION

TYPE PL-T SIGN SUPPORT

FOR NOTES, SEE SHEET 2

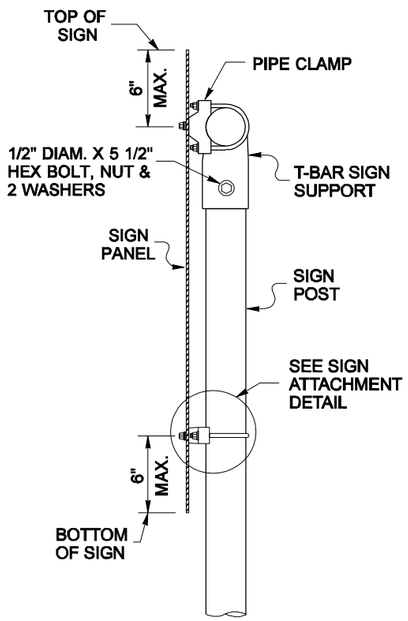

DETAIL B

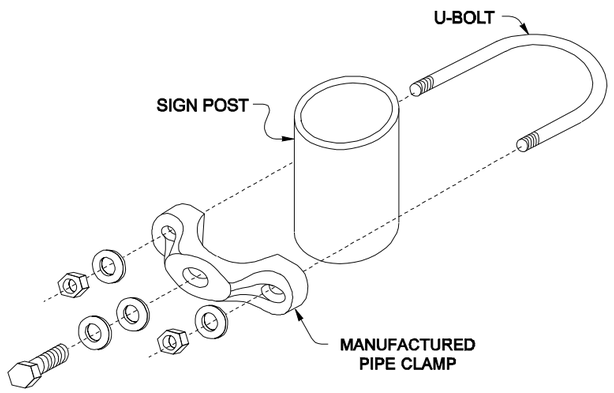

EXPLODED VIEW

PIPE CLAMP AND U-BOLT

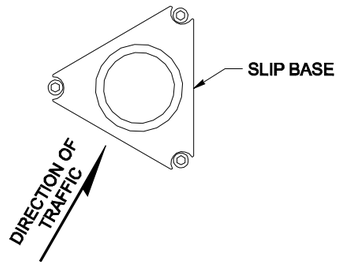

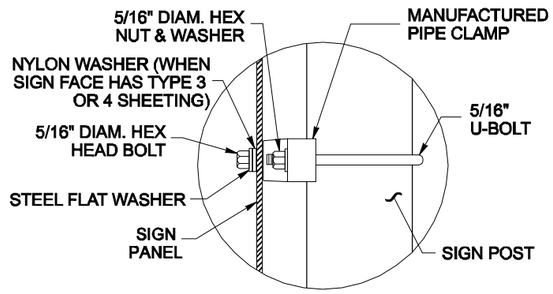

SIGN ATTACHMENT DETAIL

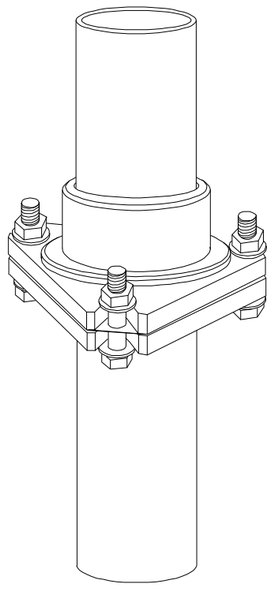

ISOMETRIC VIEW

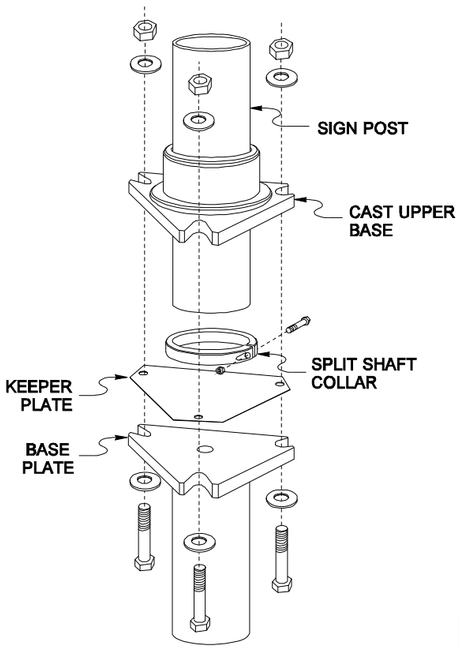

EXPLODED VIEW

SLIP BASE ASSEMBLY

R. SCOTT ZELLER
STATE OF WASHINGTON
28680
REGISTERED
PROFESSIONAL ENGINEER

EXPIRES MAY 5, 2005

NOTE: THIS PLAN IS NOT A LEGAL ENGINEERING DOCUMENT BUT AN ELECTRONIC DUPLICATE. THE ORIGINAL, SIGNED BY THE ENGINEER AND APPROVED FOR PUBLICATION, IS KEPT ON FILE AT THE WASHINGTON STATE DEPARTMENT OF TRANSPORTATION. A COPY MAY BE OBTAINED UPON REQUEST.

STEEL SIGN SUPPORT TYPES PL, PL-T, & PL-U INSTALLATION DETAILS STANDARD PLAN G-8c

SHEET 1 OF 2 SHEETS

APPROVED FOR PUBLICATION

Harold J. Peterfeso — STATE DESIGN ENGINEER

08-18-04 — DATE

Washington State Department of Transportation

EFFECTIVE: APRIL 2, 2007 TO JANUARY 6, 2008

EFFECTIVE: APRIL 2, 2007 TO JANUARY 6, 2008

DRAWN BY: MONIQUE GLICK

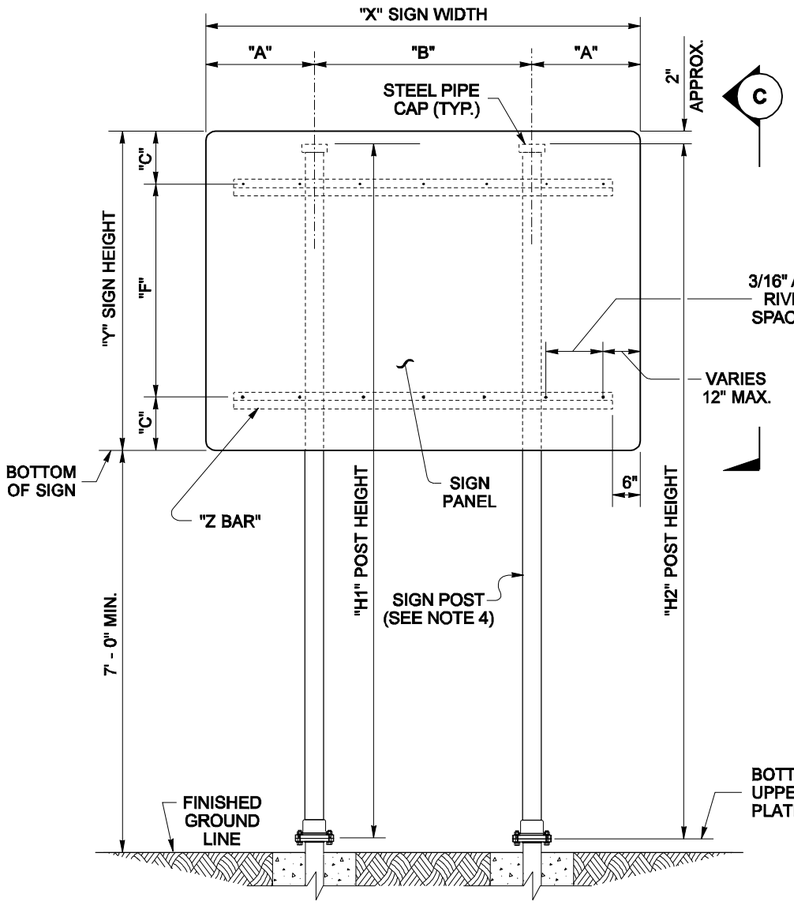

ELEVATION

TYPE PL SIGN SUPPORT (DUAL POST INSTALLATION)

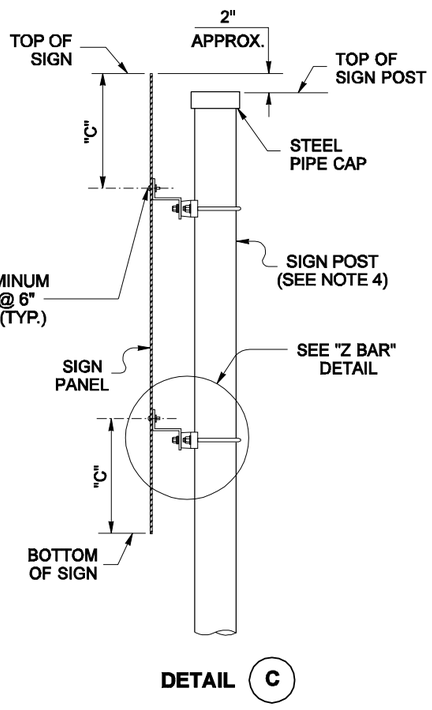

DETAIL C

	"X" SIGN WIDTH		
	6' - 0"	8' - 0"	10' - 0"
"A"	1' - 6"	2' - 0"	3' - 0"
"B"	3' - 0"	4' - 0"	4' - 0"

	"Y" SIGN HEIGHT		
	6' - 0"	8' - 0"	10' - 0"
"C"	1' - 0"	2' - 0"	3' - 0"
"F"	4' - 0"	4' - 0"	4' - 0"

"A", "B", "C", & "F" MAY BE INTERPOLATED FOR INTERMEDIATE SIGN SIZES

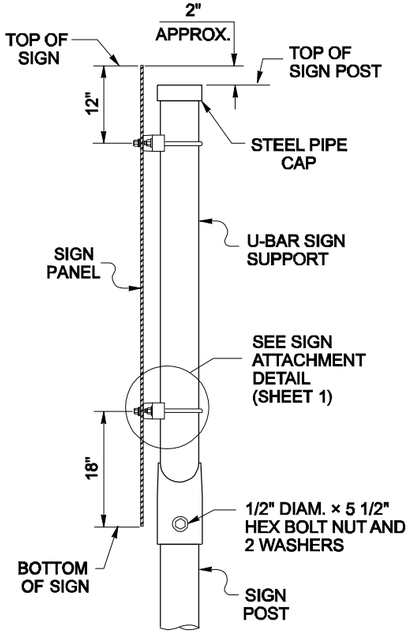

DETAIL D

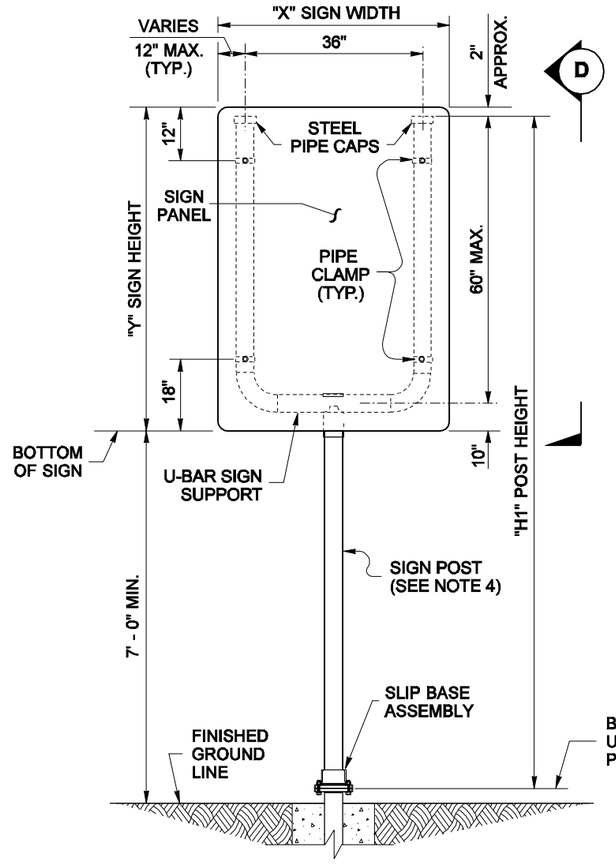

ELEVATION

TYPE PL-U SIGN SUPPORT

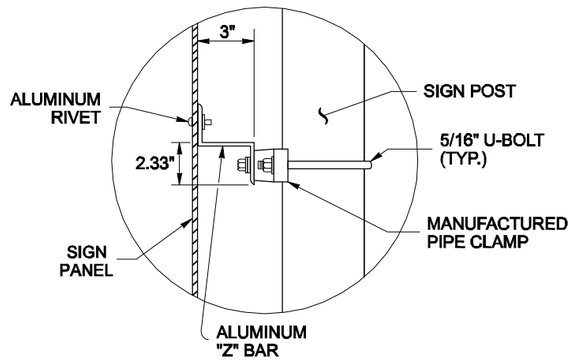

"Z" BAR DETAIL

NOTES

1. Dimensions for the parts used to assemble the base connections are intentionally not shown. Base connections are patented, manufactured products that are in compliance with NCHRP 350 crash test criteria. The base connection details are only shown on this plan to illustrate how the parts are assembled.
2. For Steel Sign Support Foundations, see Standard Plan G-8a.
3. For "X", "Y", "H1", and "H2", refer to the Sign Specification Sheet in the Contract.
4. Sign post shall be 2 1/2" diam. galvanized schedule 80 steel pipe.

R. SCOTT ZELLER
STATE OF WASHINGTON
28680
REGISTERED
PROFESSIONAL ENGINEER

EXPIRES MAY 5, 2005

NOTE: THIS PLAN IS NOT A LEGAL ENGINEERING DOCUMENT BUT AN ELECTRONIC DUPLICATE. THE ORIGINAL, SIGNED BY THE ENGINEER AND APPROVED FOR PUBLICATION, IS KEPT ON FILE AT THE WASHINGTON STATE DEPARTMENT OF TRANSPORTATION. A COPY MAY BE OBTAINED UPON REQUEST.

STEEL SIGN SUPPORT TYPES PL, PL-T, & PL-U INSTALLATION DETAILS STANDARD PLAN G-8c

SHEET 2 OF 2 SHEETS

APPROVED FOR PUBLICATION

Harold J. Peterfeso — STATE DESIGN ENGINEER

08-18-04 — DATE

Washington State Department of Transportation

EFFECTIVE: APRIL 2, 2007 TO JANUARY 6, 2008

EFFECTIVE: APRIL 2, 2007 TO JANUARY 6, 2008

EFFECTIVE: APRIL 2, 2007 TO JANUARY 6, 2008

DRAWN BY: MONIQUE GLICK

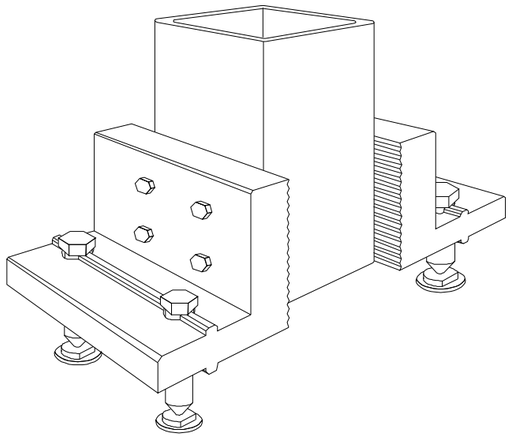

PERSPECTIVE VIEW

TYPE AS
BREAKAWAY SIGN BRACKET ASSEMBLY

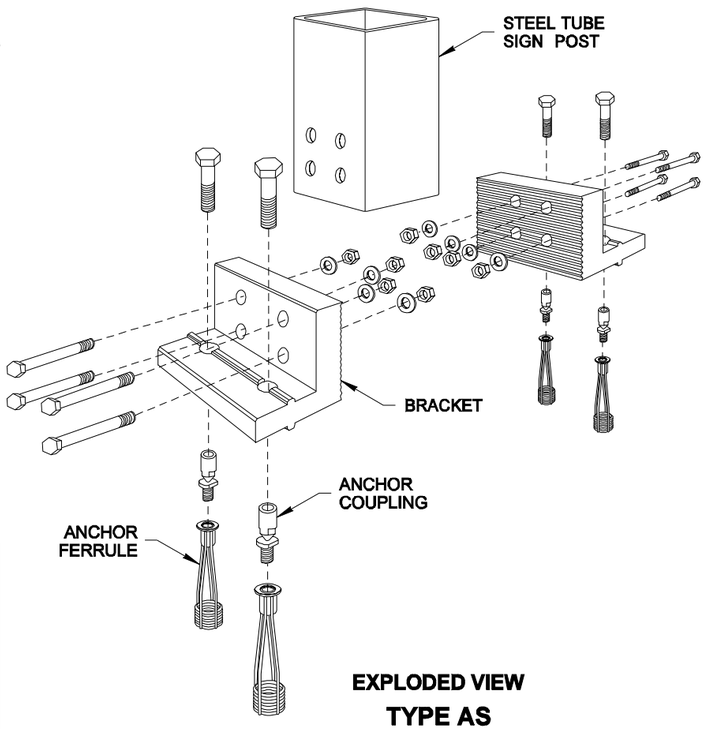

EXPLODED VIEW

TYPE AS
BREAKAWAY SIGN BRACKET ASSEMBLY

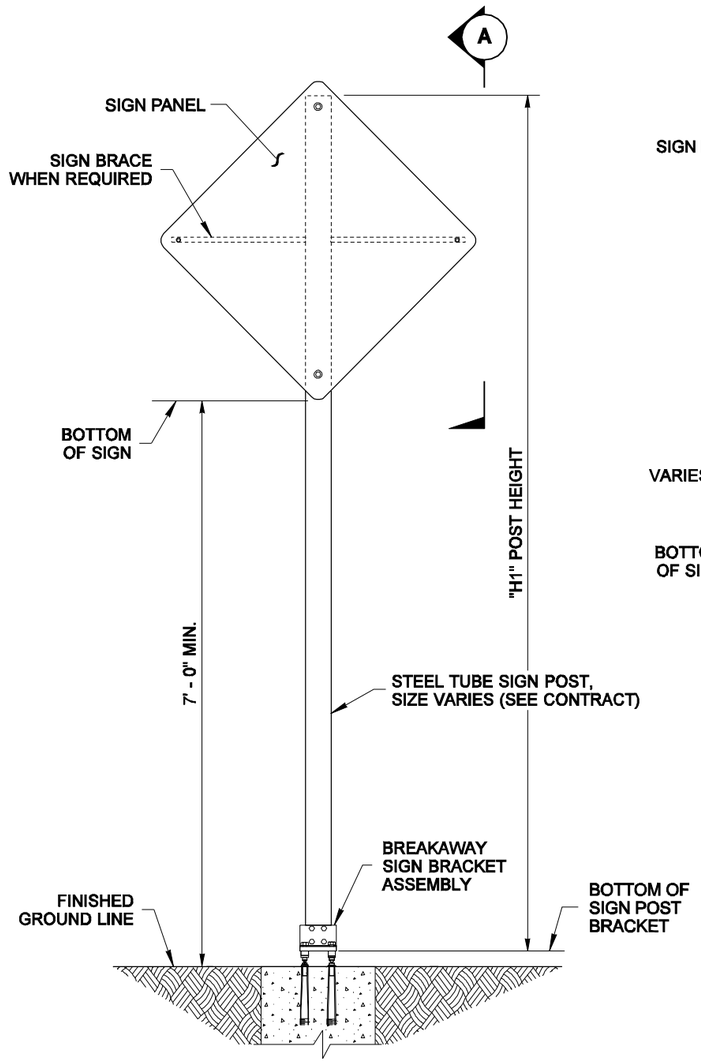

ELEVATION

TYPE AS
SIGN SUPPORT

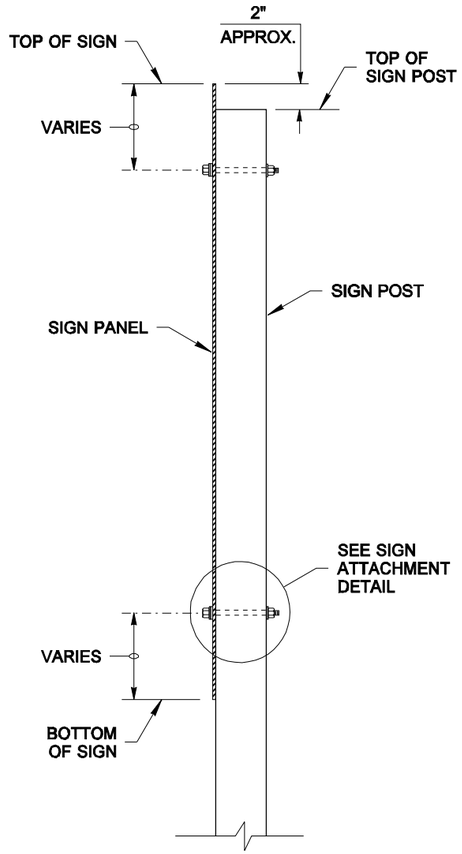

DETAIL (A)

NOTES

1. Dimensions for the parts used to assemble the base connections are intentionally not shown. Base connections are patented, manufactured products that are in compliance with NCHRP 350 crash test criteria. The base connection details are only shown on this plan to illustrate how the parts are assembled.
2. For Steel Sign Support Foundations, see Standard Plan G-8a.
3. For "H1" refer to the Sign Specification Sheet in the Contract.

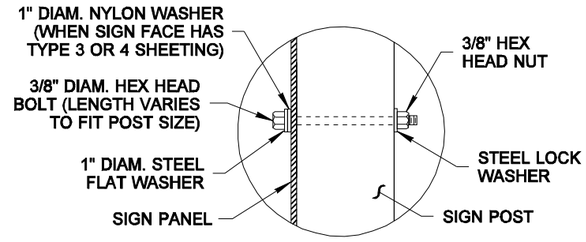

SIGN ATTACHMENT DETAIL

R. SCOTT ZELLER
STATE OF WASHINGTON
28680
REGISTERED
PROFESSIONAL ENGINEER

EXPIRES MAY 5, 2005

NOTE: THIS PLAN IS NOT A LEGAL ENGINEERING DOCUMENT BUT AN ELECTRONIC DUPLICATE. THE ORIGINAL, SIGNED BY THE ENGINEER AND APPROVED FOR PUBLICATION, IS KEPT ON FILE AT THE WASHINGTON STATE DEPARTMENT OF TRANSPORTATION. A COPY MAY BE OBTAINED UPON REQUEST.

STEEL SIGN SUPPORT
TYPE AS
INSTALLATION DETAILS
STANDARD PLAN G-8d

SHEET 1 OF 1 SHEET

APPROVED FOR PUBLICATION

Harold J. Peterfeso — STATE DESIGN ENGINEER

12-15-04 — DATE

Washington State Department of Transportation

EFFECTIVE: APRIL 2, 2007 TO JANUARY 6, 2008

EFFECTIVE: APRIL 2, 2007 TO JANUARY 6, 2008

EFFECTIVE: APRIL 2, 2007 TO JANUARY 6, 2008

DRAWN BY: MONIQUE GLICK

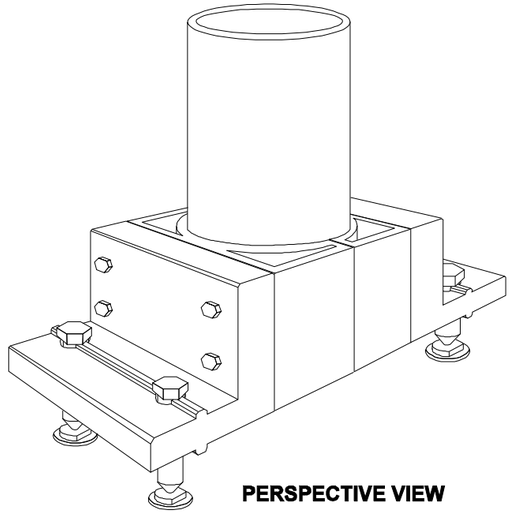

PERSPECTIVE VIEW

TYPE AP
BREAKAWAY SIGN BRACKET ASSEMBLY

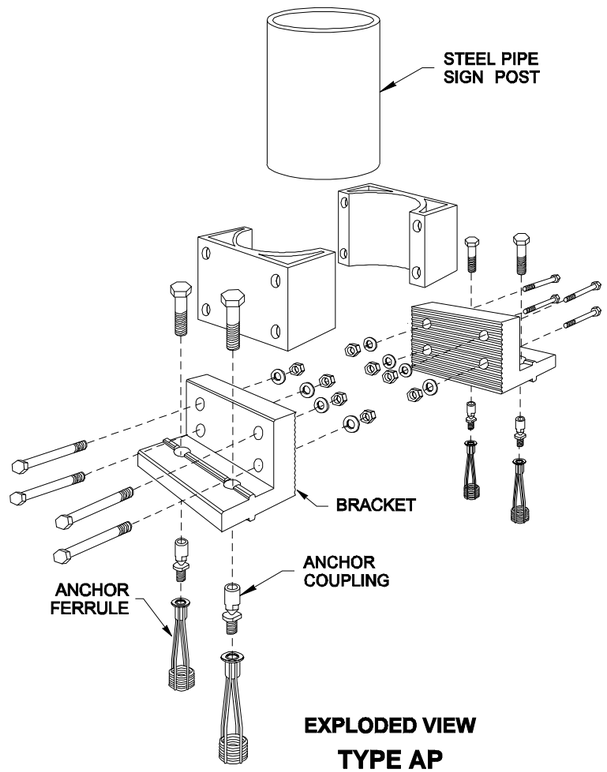

EXPLODED VIEW

TYPE AP
BREAKAWAY SIGN BRACKET ASSEMBLY

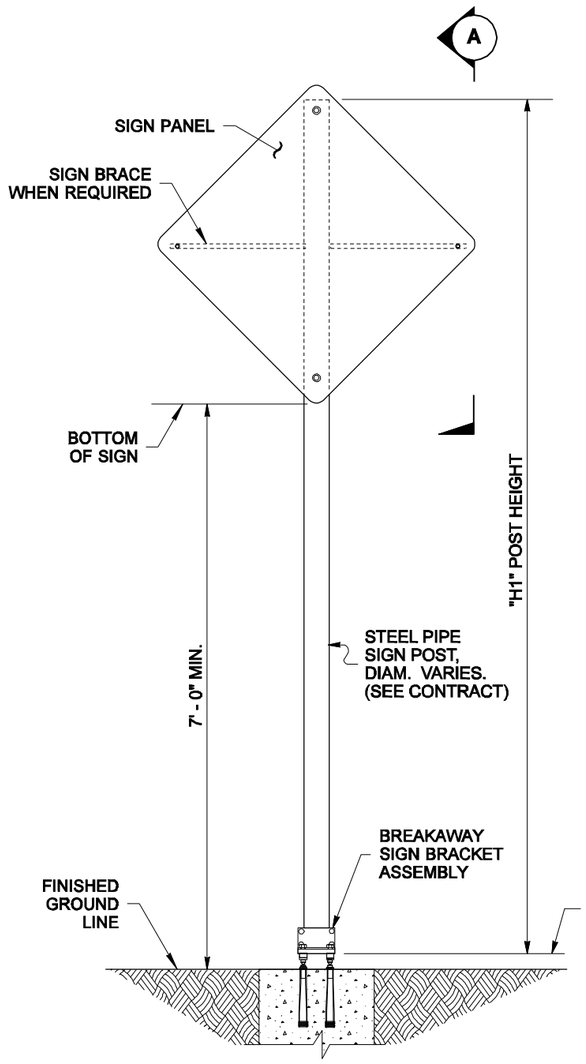

ELEVATION

TYPE AP
SIGN SUPPORT

EFFECTIVE: APRIL 2, 2007 TO JANUARY 6, 2008

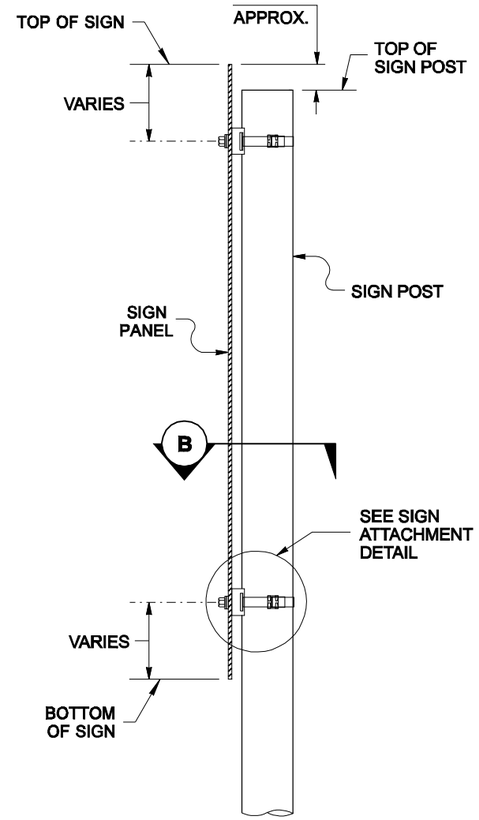

DETAIL (A)

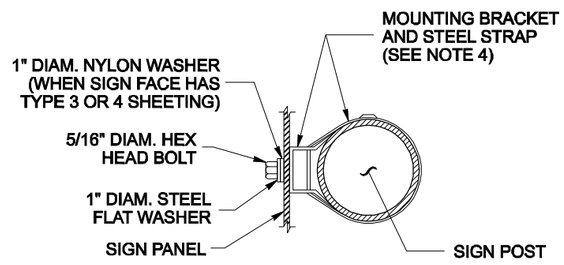

DETAIL (B)

NOTES

1. Dimensions for the parts used to assemble the base connections are intentionally not shown. Base connections are patented, manufactured products that are in compliance with NCHRP 350 crash test criteria. The base connection details are only shown on this plan to illustrate how the parts are assembled.
2. For Steel Sign Support Foundation, see Standard Plan G-8a.
3. For "H1" refer to the Sign Specification Sheet in the Contract.
4. Mounting brackets with steel straps shall be the stainless steel one bolt, flared leg bracket and 3/4" wide, 0.030" thick strap "Band-it" products or an approved equal.

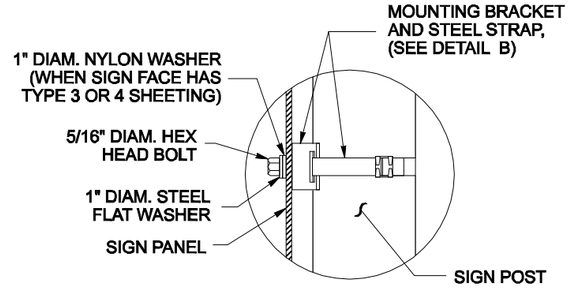

SIGN ATTACHMENT DETAIL

SIGN ATTACHMENT DETAIL

R. SCOTT ZELLER
STATE OF WASHINGTON
28680
REGISTERED
PROFESSIONAL ENGINEER

EXPIRES MAY 5, 2005

NOTE: THIS PLAN IS NOT A LEGAL ENGINEERING DOCUMENT BUT AN ELECTRONIC DUPLICATE. THE ORIGINAL, SIGNED BY THE ENGINEER AND APPROVED FOR PUBLICATION, IS KEPT ON FILE AT THE WASHINGTON STATE DEPARTMENT OF TRANSPORTATION. A COPY MAY BE OBTAINED UPON REQUEST.

STEEL SIGN SUPPORT TYPE AP INSTALLATION DETAILS STANDARD PLAN G-8e

SHEET 1 OF 1 SHEET

APPROVED FOR PUBLICATION

Harold J. Peterfeso — STATE DESIGN ENGINEER
08-18-04 — DATE

Washington State Department of Transportation

EFFECTIVE: APRIL 2, 2007 TO JANUARY 6, 2008

EFFECTIVE: APRIL 2, 2007 TO JANUARY 6, 2008

EFFECTIVE: APRIL 2, 2007 TO JANUARY 6, 2008

EFFECTIVE: APRIL 2, 2007 TO JANUARY 6, 2008

DRAWN BY: MONIQUE GLICK

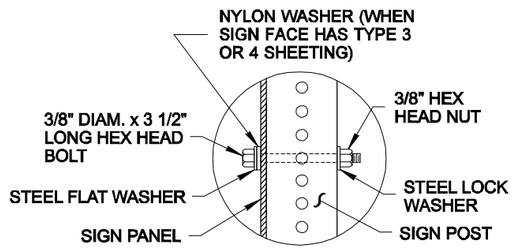

SIGN ATTACHMENT DETAIL

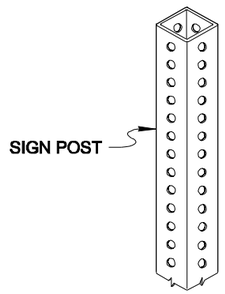

TYPE ST-1

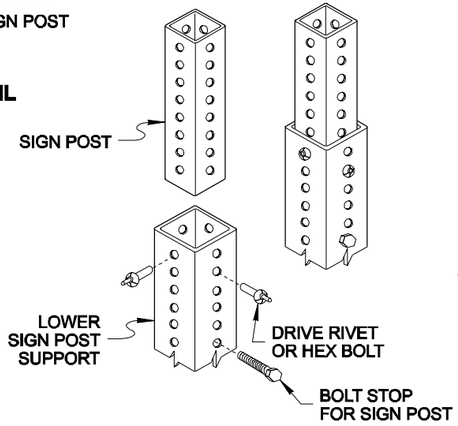

TYPE ST-2

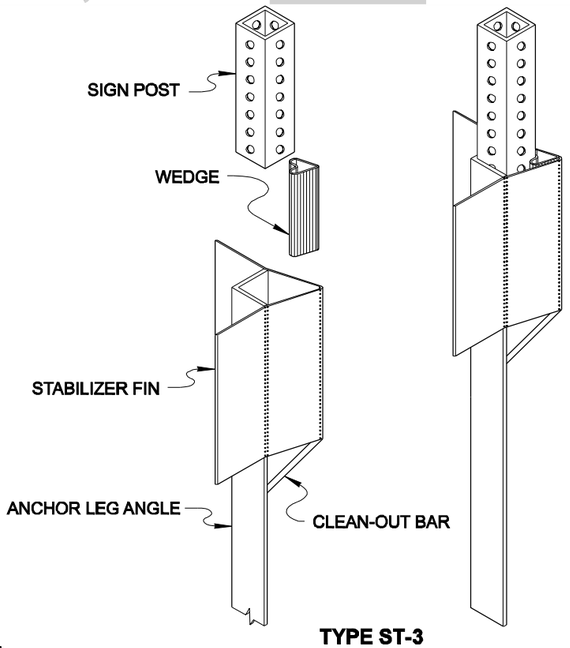

TYPE ST-3

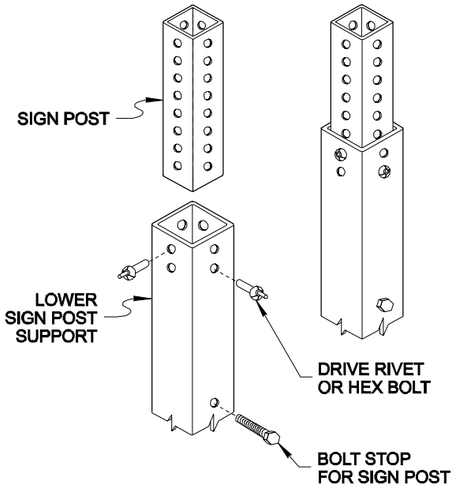

TYPE ST-4

ISOMETRIC AND EXPLODED VIEWS

SQUARE TUBE SIGN BASE ASSEMBLIES

NOTES

1. Dimensions for the parts used to assemble the base connections are intentionally not shown. Base connections are patented, manufactured products that are in compliance with NCHRP 350 crash test criteria. The base connection details are only shown on this plan to illustrate how the parts are assembled.
2. For "H1" refer to the Sign Specification Sheet in the Contract.

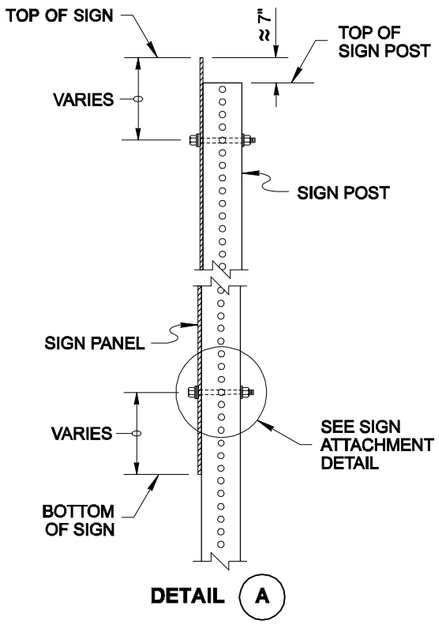

DETAIL A

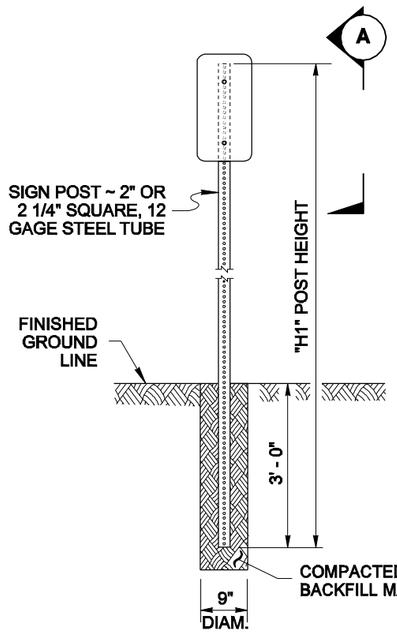

ELEVATION

TYPE ST-1 SIGN SUPPORT

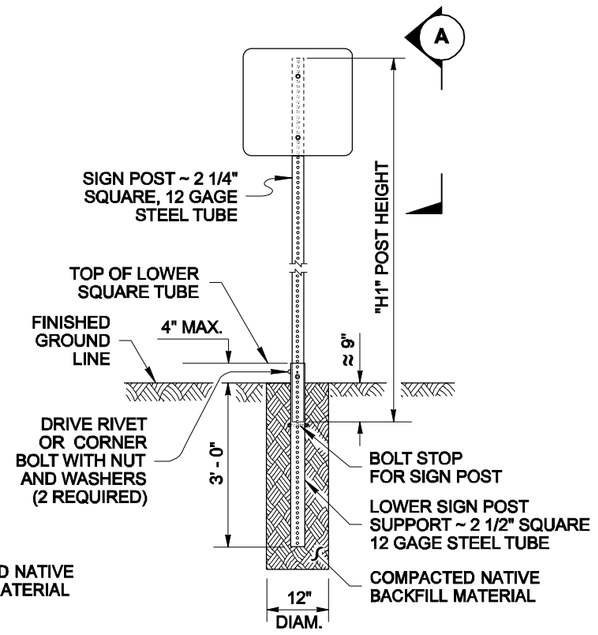

ELEVATION

TYPE ST-2 SIGN SUPPORT

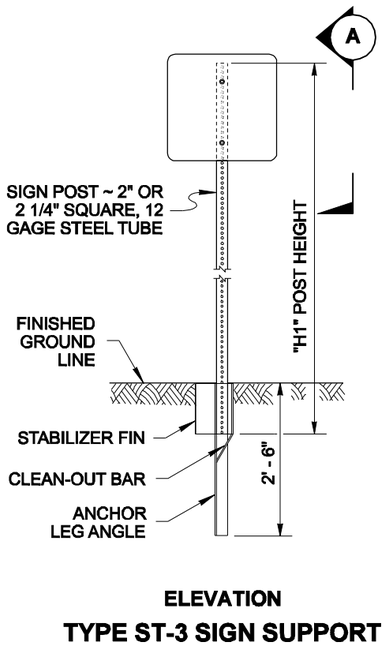

ELEVATION

TYPE ST-3 SIGN SUPPORT

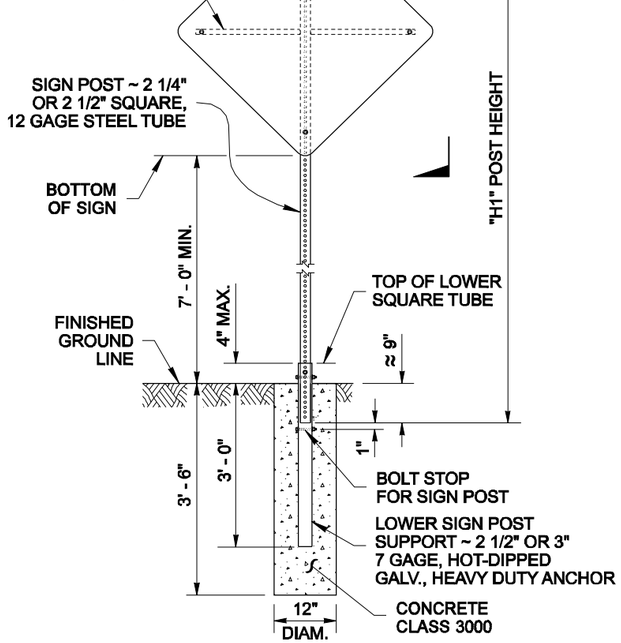

ELEVATION

TYPE ST-4 SIGN SUPPORT

R. SCOTT ZELLER
STATE OF WASHINGTON
28680
REGISTERED
PROFESSIONAL ENGINEER

EXPIRES MAY 5, 2007

NOTE: THIS PLAN IS NOT A LEGAL ENGINEERING DOCUMENT BUT AN ELECTRONIC DUPLICATE. THE ORIGINAL, SIGNED BY THE ENGINEER AND APPROVED FOR PUBLICATION, IS KEPT ON FILE AT THE WASHINGTON STATE DEPARTMENT OF TRANSPORTATION. A COPY MAY BE OBTAINED UPON REQUEST.

STEEL SIGN SUPPORT TYPES ST-1 ~ ST-4 INSTALLATION DETAILS STANDARD PLAN G-8f

SHEET 1 OF 1 SHEET

APPROVED FOR PUBLICATION

Harold J. Peterfeso — STATE DESIGN ENGINEER — *11-09-05* — DATE

Washington State Department of Transportation

EFFECTIVE: APRIL 2, 2007 TO JANUARY 6, 2008

EFFECTIVE: APRIL 2, 2007 TO JANUARY 6, 2008

EFFECTIVE: APRIL 2, 2007 TO JANUARY 6, 2008

DRAWN BY: MONIQUE GLICK

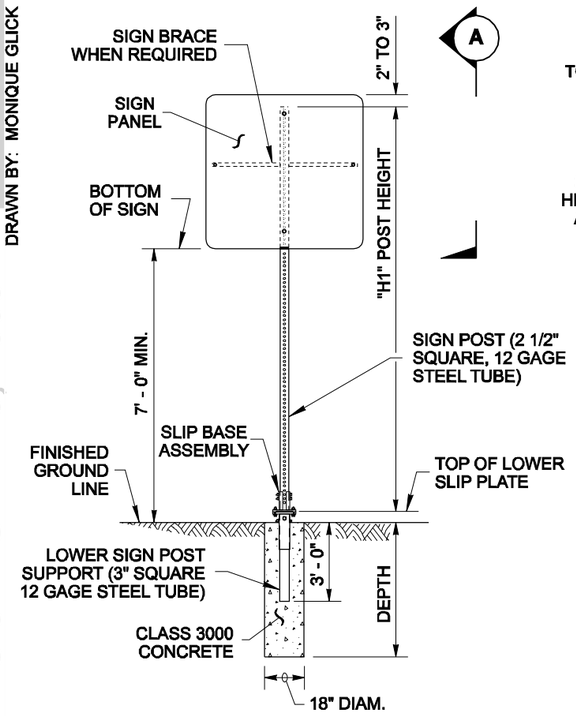

ELEVATION

TYPE SB-1 & SB-2 SIGN SUPPORT

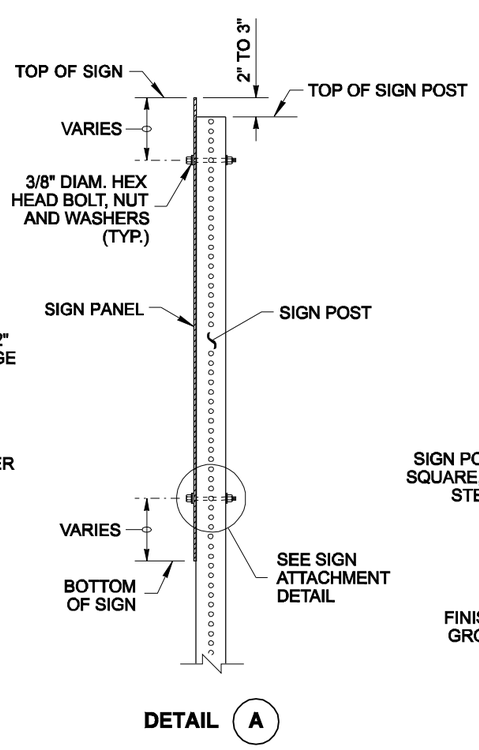

DETAIL (A)

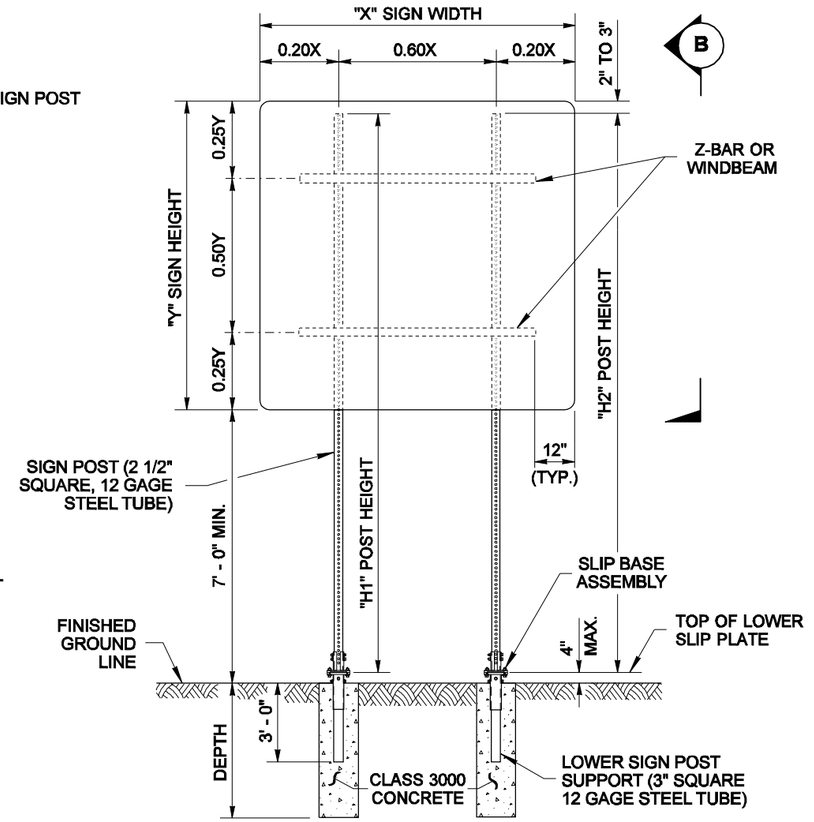

ELEVATION

TYPE SB-1 & SB-2 SIGN SUPPORT (DUAL POST INSTALLATION)

NOTES

1. For "W", Horizontal distance from edge of traveled way to center of nearest post, and "V", Vertical distance from edge of traveled way to bottom of sign, see Standard Plan G-1.
2. For "X", "Y", "H1", "H2", "H3", and "H4" refer to the Sign Specification Sheet in the Contract.

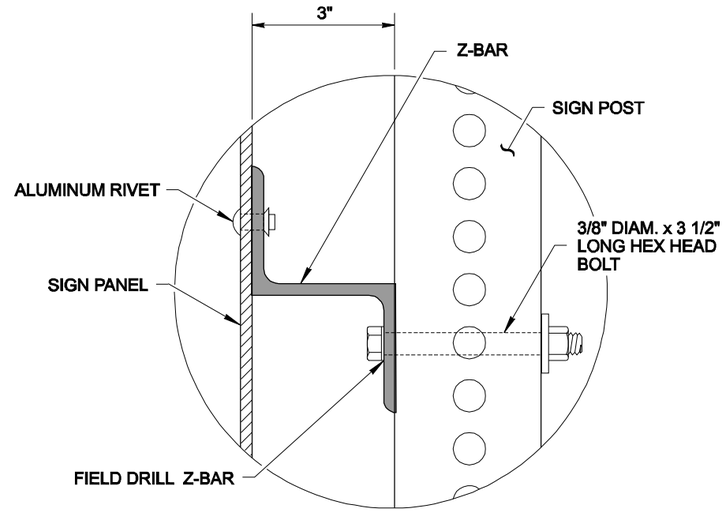

Z-BAR DETAIL

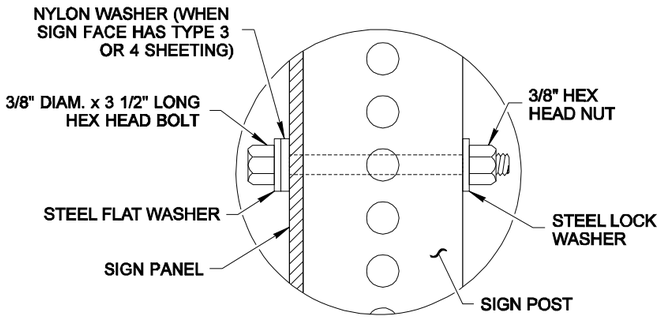

SIGN ATTACHMENT DETAIL

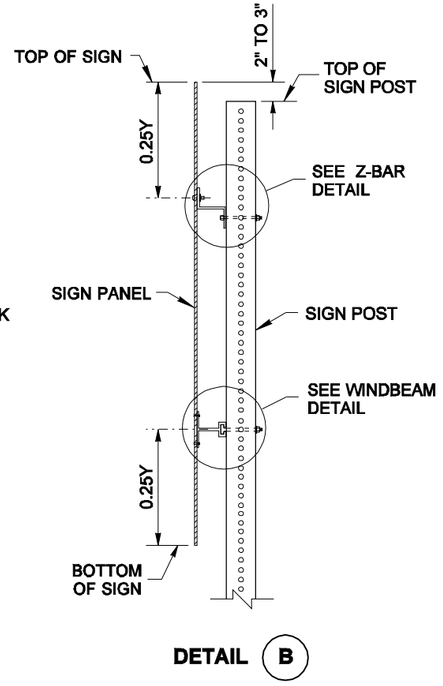

DETAIL (B)

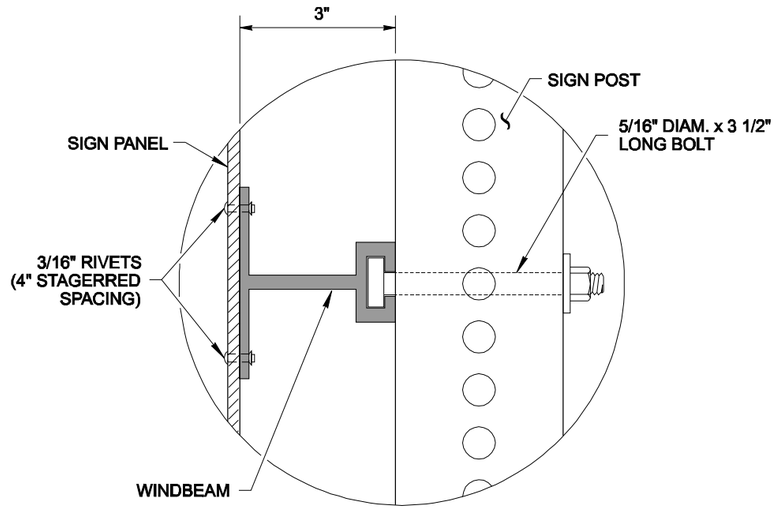

WINDBEAM DETAIL

R. SCOTT ZELLER
STATE OF WASHINGTON
28680
REGISTERED
PROFESSIONAL ENGINEER

EXPIRES MAY 5, 2007

NOTE: THIS PLAN IS NOT A LEGAL ENGINEERING DOCUMENT BUT AN ELECTRONIC DUPLICATE. THE ORIGINAL, SIGNED BY THE ENGINEER AND APPROVED FOR PUBLICATION, IS KEPT ON FILE AT THE WASHINGTON STATE DEPARTMENT OF TRANSPORTATION. A COPY MAY BE OBTAINED UPON REQUEST.

STEEL SIGN SUPPORT TYPES SB-1 & SB-2 INSTALLATION DETAILS STANDARD PLAN G-8g

SHEET 1 OF 2 SHEETS

APPROVED FOR PUBLICATION

Harold J. Peterfeso — STATE DESIGN ENGINEER

11-09-05 — DATE

Washington State Department of Transportation

EFFECTIVE: APRIL 2, 2007 TO JANUARY 6, 2008

EFFECTIVE: APRIL 2, 2007 TO JANUARY 6, 2008

DRAWN BY: MONIQUE GLICK

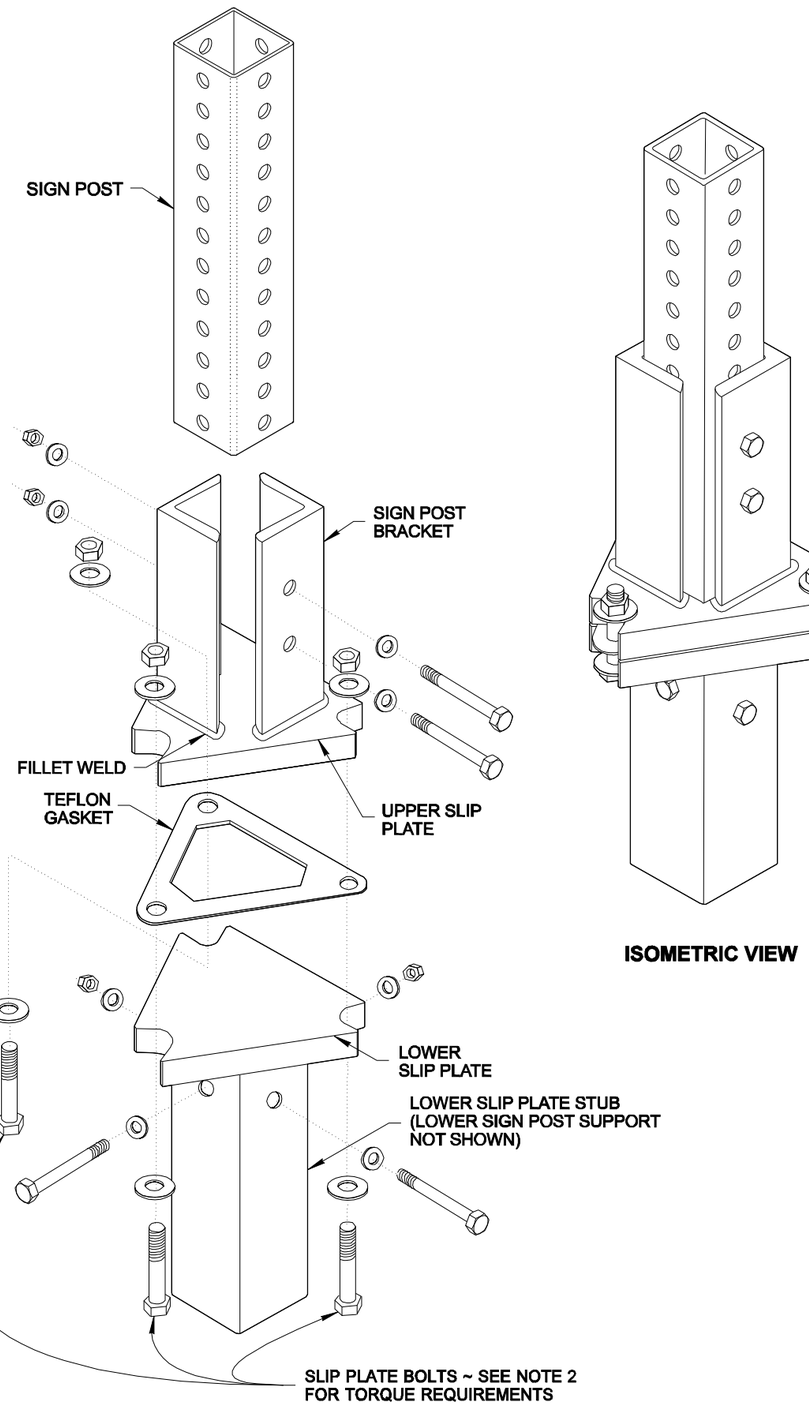

EXPLODED VIEW

ISOMETRIC VIEW

TYPE SB-1
SLIP BASE ASSEMBLY

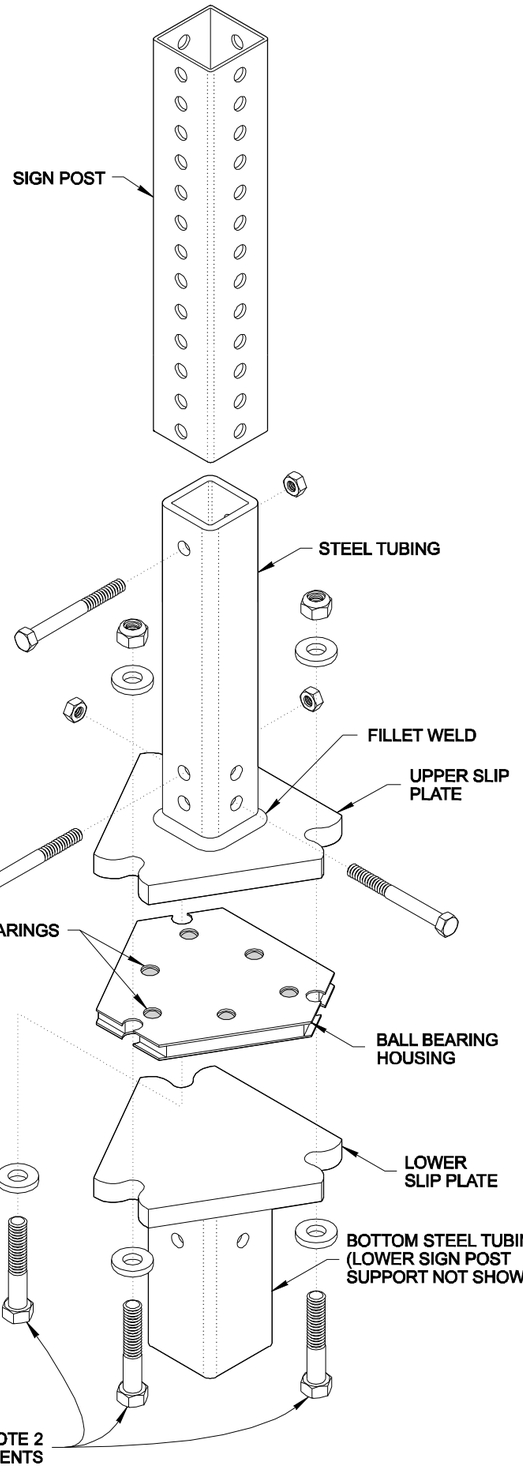

EXPLODED VIEW

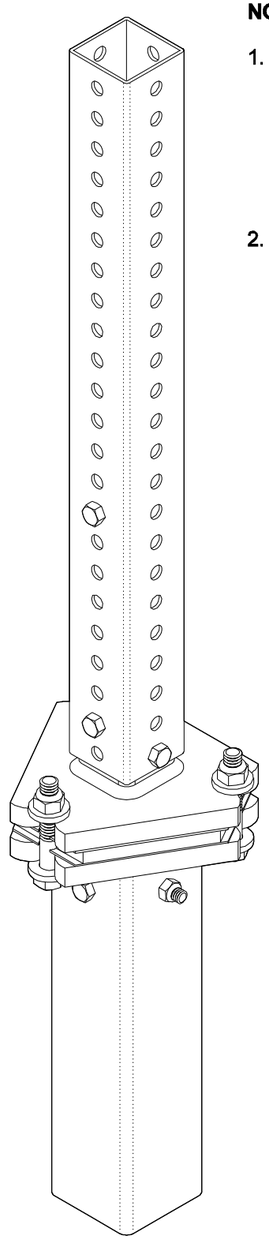

ISOMETRIC VIEW

TYPE SB-2
SLIP BASE ASSEMBLY

NOTES

1. Dimensions for the parts used to assemble the base connections are intentionally not shown. Base connections are patented, manufactured products that are in compliance with NCHRP 350 crash test criteria. The base connection details are only shown on this plan to illustrate how the parts are assembled.

2. Do not tighten any single Slip Plate Bolt to the recommended torque before pre-tightening the other bolts. Progressively tighten the three Slip Plate Bolts in 10 ft-lb increments, alternately, to a final torque of 40 ft-lbs on each.



EXPIRES MAY 5, 2007

NOTE: THIS PLAN IS NOT A LEGAL ENGINEERING DOCUMENT BUT AN ELECTRONIC DUPLICATE. THE ORIGINAL, SIGNED BY THE ENGINEER AND APPROVED FOR PUBLICATION, IS KEPT ON FILE AT THE WASHINGTON STATE DEPARTMENT OF TRANSPORTATION. A COPY MAY BE OBTAINED UPON REQUEST.

STEEL SIGN SUPPORT TYPES SB-1 & SB-2 INSTALLATION DETAILS STANDARD PLAN G-8g

SHEET 2 OF 2 SHEETS

APPROVED FOR PUBLICATION

Harold J. Peterfeso — STATE DESIGN ENGINEER

11-09-05 — DATE

Washington State Department of Transportation

EFFECTIVE: APRIL 2, 2007 TO JANUARY 6, 2008

EFFECTIVE: APRIL 2, 2007 TO JANUARY 6, 2008

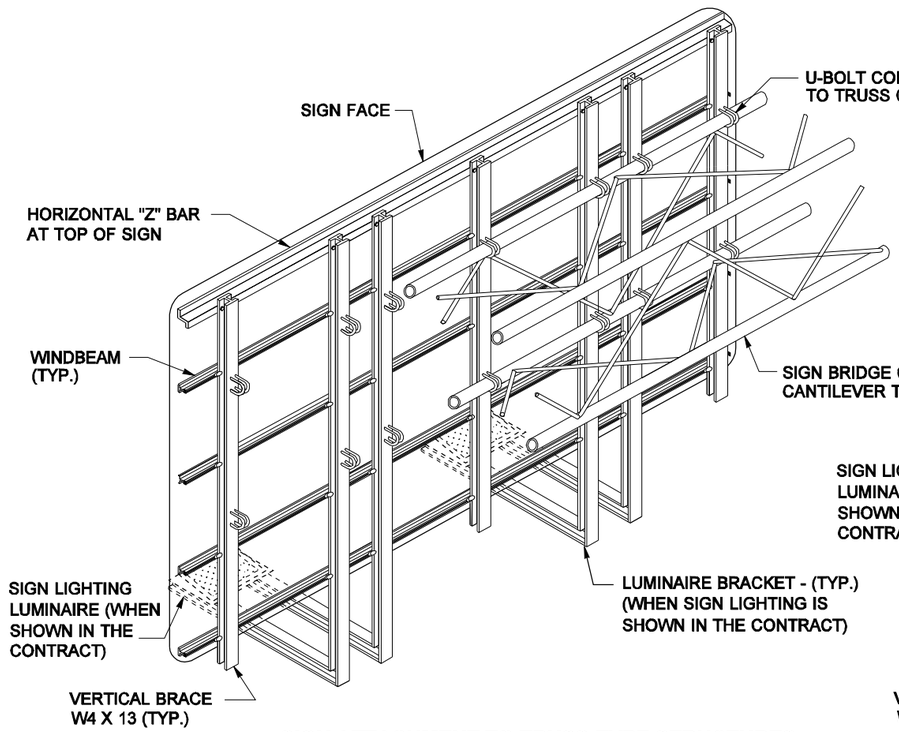

SIGN ATTACHMENT TO TRUSS-TYPE STRUCTURES

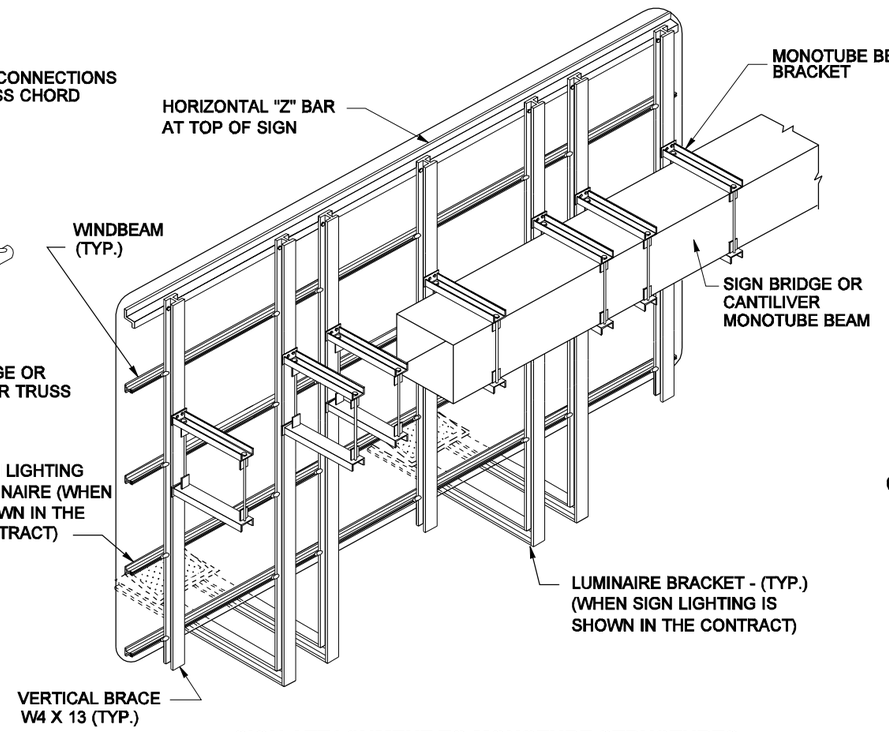

SIGN ATTACHMENT TO MONOTUBE STRUCTURES

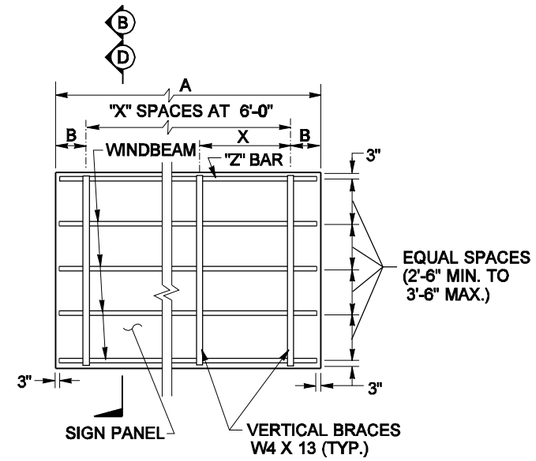

OVERHEAD SIGNS WITHOUT SIGN LIGHTING LUMINAIRES

A	B	X
8'-0"	1'-0"	1
10'-0"	2'-0"	1
12'-0"	3'-0"	1
14'-0"	1'-0"	2
16'-0"	2'-0"	2
18'-0"	3'-0"	2
20'-0"	1'-0"	3
22'-0"	2'-0"	3

A	B	X
24'-0"	3'-0"	3
26'-0"	1'-0"	4
28'-0"	2'-0"	4
30'-0"	3'-0"	4
32'-0"	1'-0"	5
34'-0"	2'-0"	5
36'-0"	3'-0"	5

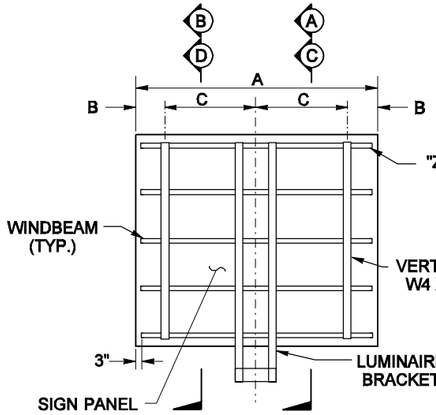

SIGN WITH ONE SIGN LIGHTING LUMINAIRE

A	B	C
8'-0"	6"	3'-6"
10'-0"	6"	4'-6"
12'-0"	6"	5'-6"
14'-0"	1'-0"	6'-0"
16'-0"	2'-0"	6'-0"

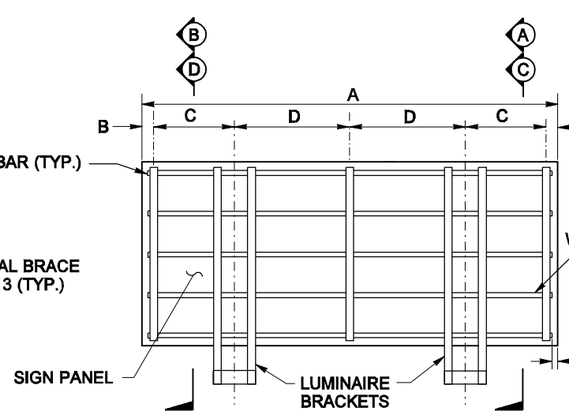

SIGN WITH TWO SIGN LIGHTING LUMINAIRES

A	B	C	D
18'-0"	6"	3'-6"	5'-0"
20'-0"	6"	3'-6"	6'-0"
22'-0"	6"	3'-6"	4'-8"
24'-0"	6"	3'-6"	5'-4"

A	B	C	D
26'-0"	6"	4'-6"	5'-4"
28'-0"	6"	5'-6"	5'-4"
30'-0"	1'-0"	6'-0"	5'-4"
32'-0"	2'-0"	6'-0"	5'-4"

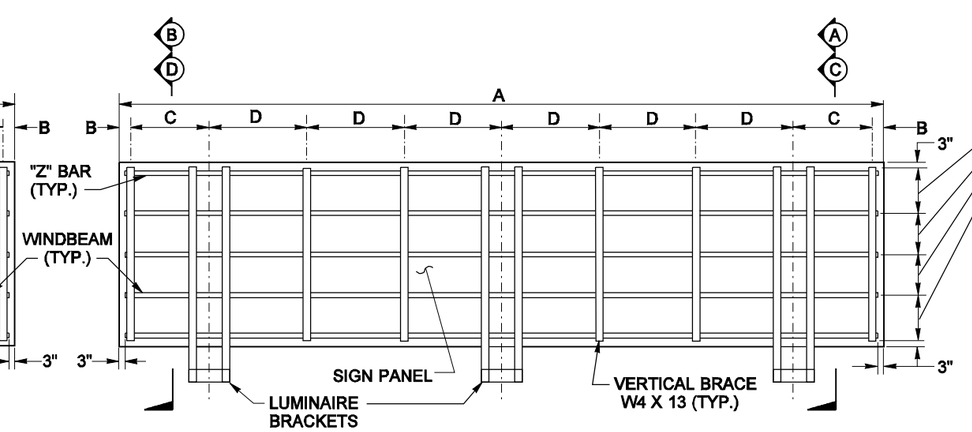

SIGN WITH THREE SIGN LIGHTING LUMINAIRES

A	B	C	D
34'-0"	6"	3'-6"	4'-4"
36'-0"	6"	3'-6"	4'-8"

JEROME A. WEIGEL
STATE OF WASHINGTON
14742
REGISTERED
PROFESSIONAL ENGINEER

EXPIRES JUNE 29, 2004

NOTE: THIS PLAN IS NOT A LEGAL ENGINEERING DOCUMENT BUT AN ELECTRONIC DUPLICATE. THE ORIGINAL, SIGNED BY THE ENGINEER AND APPROVED FOR PUBLICATION, IS KEPT ON FILE AT THE WASHINGTON STATE DEPARTMENT OF TRANSPORTATION. A COPY MAY BE OBTAINED UPON REQUEST.

OVERHEAD SIGN MOUNTING DETAILS STANDARD PLAN G-9a

SHEET 1 OF 4 SHEETS

APPROVED FOR PUBLICATION

Harold J. Peterfeso — STATE DESIGN ENGINEER — *06-25-02* — DATE

Washington State Department of Transportation

EFFECTIVE: APRIL 2, 2007 TO JANUARY 6, 2008

EFFECTIVE: APRIL 2, 2007 TO JANUARY 6, 2008
EFFECTIVE: APRIL 2, 2007 TO JANUARY 6, 2008

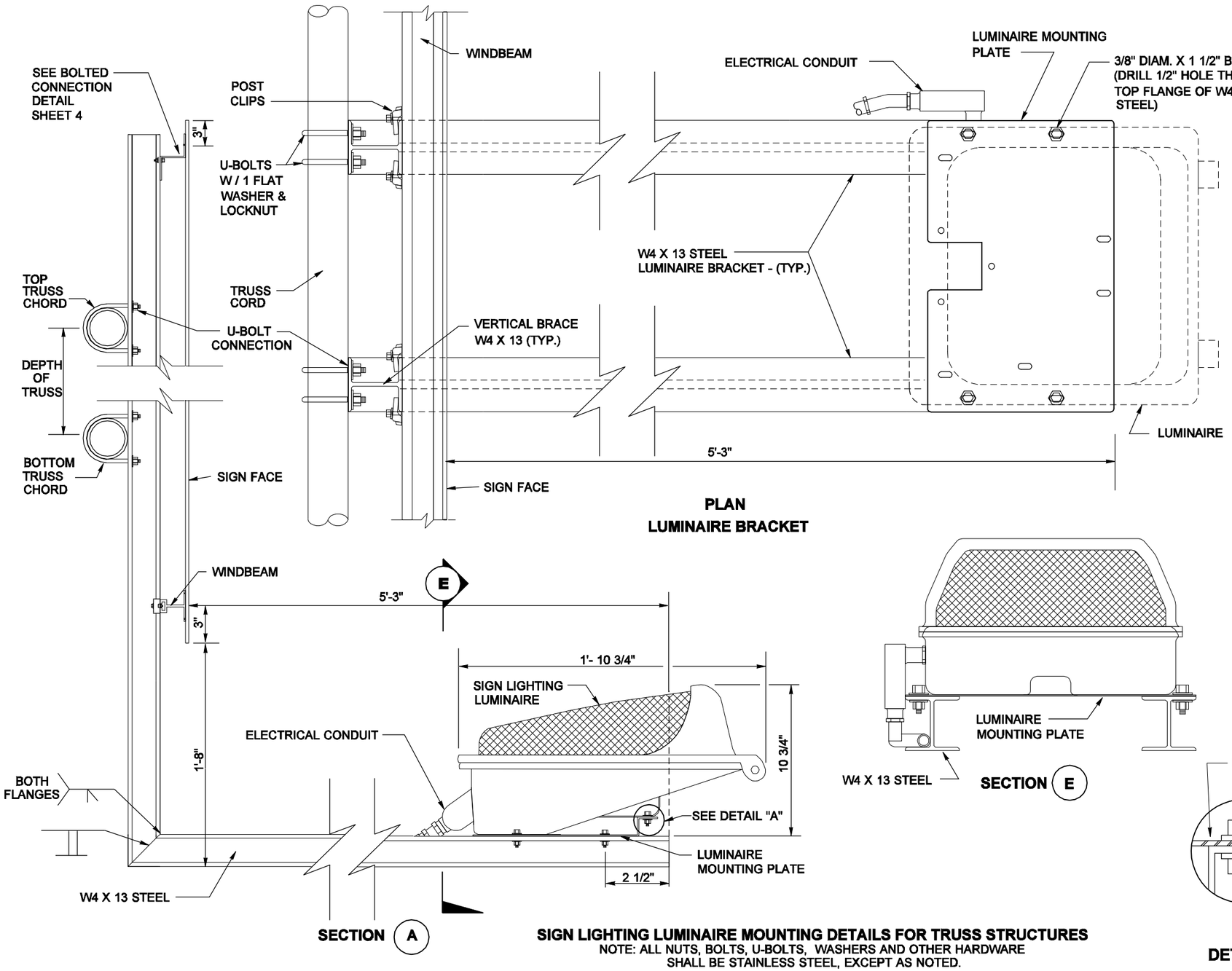

PLAN
LUMINAIRE BRACKET

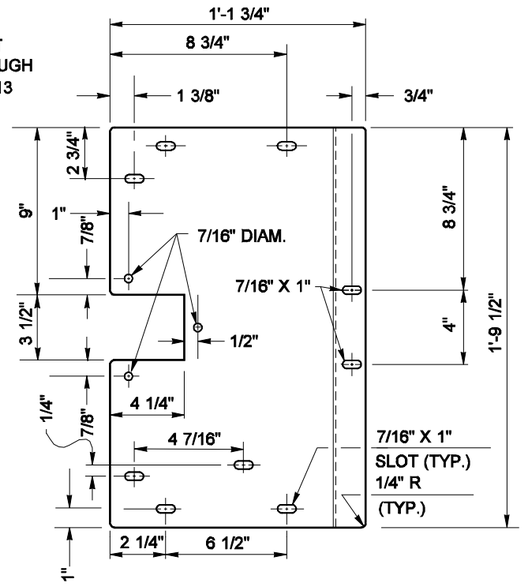

PLAN



END VIEW

LUMINAIRE MOUNTING PLATE
ITEM AVAILABLE FROM FIXTURE MANUFACTURER,
MATERIAL IS GALV. 10 GAGE STEEL PLATE

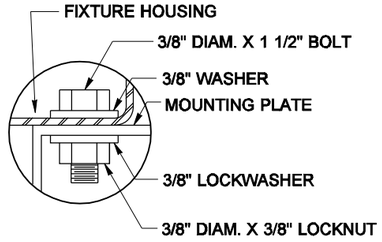

DETAIL "A"

SIGN LIGHTING LUMINAIRE MOUNTING DETAILS FOR TRUSS STRUCTURES
NOTE: ALL NUTS, BOLTS, U-BOLTS, WASHERS AND OTHER HARDWARE SHALL BE STAINLESS STEEL, EXCEPT AS NOTED.

JEROME A. WEIGEL
STATE OF WASHINGTON
14742
REGISTERED
PROFESSIONAL ENGINEER

EXPIRES JUNE 29, 2004

NOTE: THIS PLAN IS NOT A LEGAL ENGINEERING DOCUMENT BUT AN ELECTRONIC DUPLICATE. THE ORIGINAL, SIGNED BY THE ENGINEER AND APPROVED FOR PUBLICATION, IS KEPT ON FILE AT THE WASHINGTON STATE DEPARTMENT OF TRANSPORTATION. A COPY MAY BE OBTAINED UPON REQUEST.

OVERHEAD SIGN MOUNTING DETAILS STANDARD PLAN G-9a

SHEET 2 OF 4 SHEETS

APPROVED FOR PUBLICATION

Harold J. Peterfeso — STATE DESIGN ENGINEER
06-25-02 — DATE

Washington State Department of Transportation

EFFECTIVE: APRIL 2, 2007 TO JANUARY 6, 2008
EFFECTIVE: APRIL 2, 2007 TO JANUARY 6, 2008

EFFECTIVE: APRIL 2, 2007 TO JANUARY 6, 2008

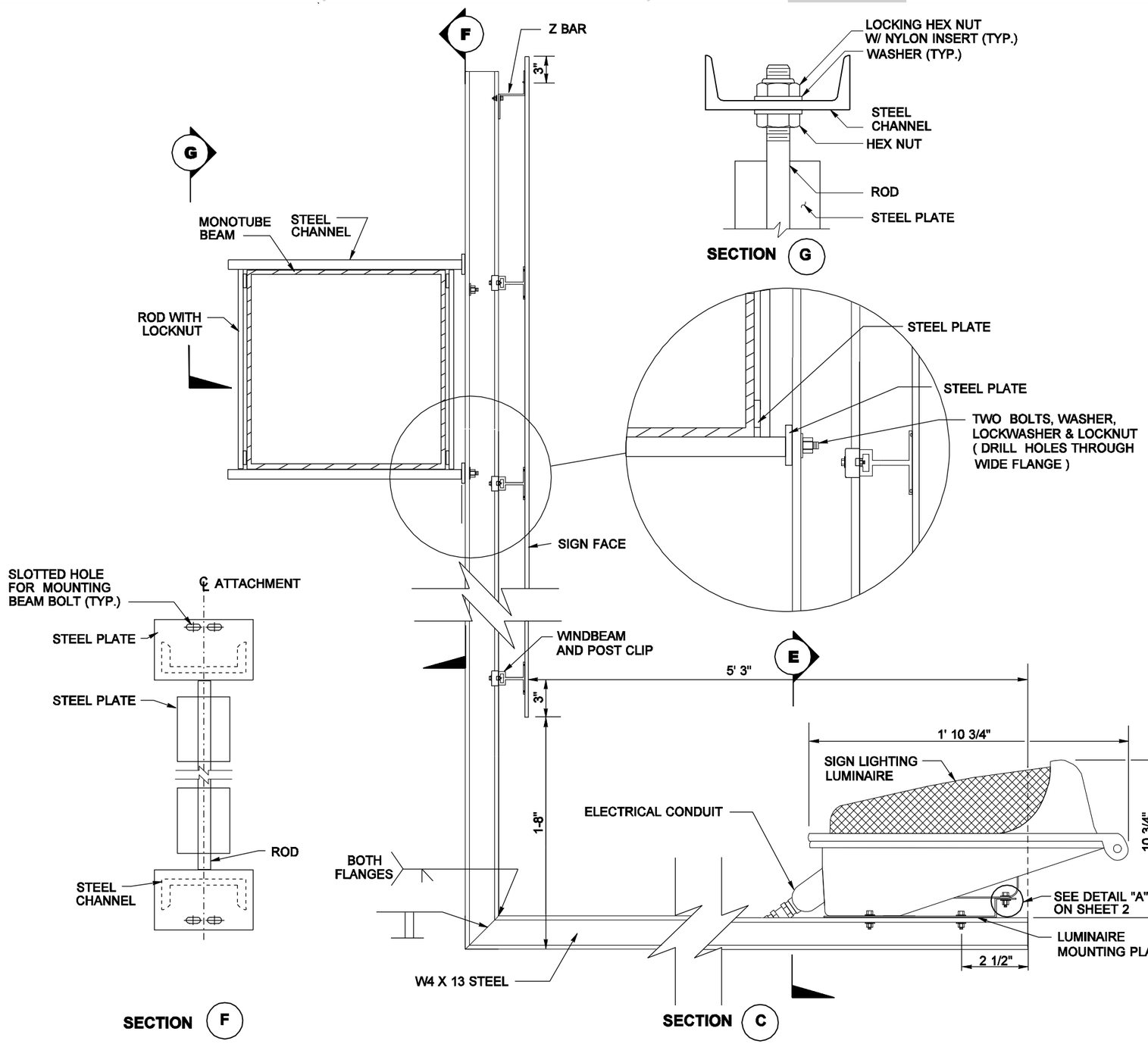

SIGN LIGHTING LUMINAIRE MOUNTING DETAILS FOR MONOTUBE STRUCTURES

NOTES

1. Refer to Contract Plans for Monotube Beam Bracket element sizes, dimensions and weld symbols.

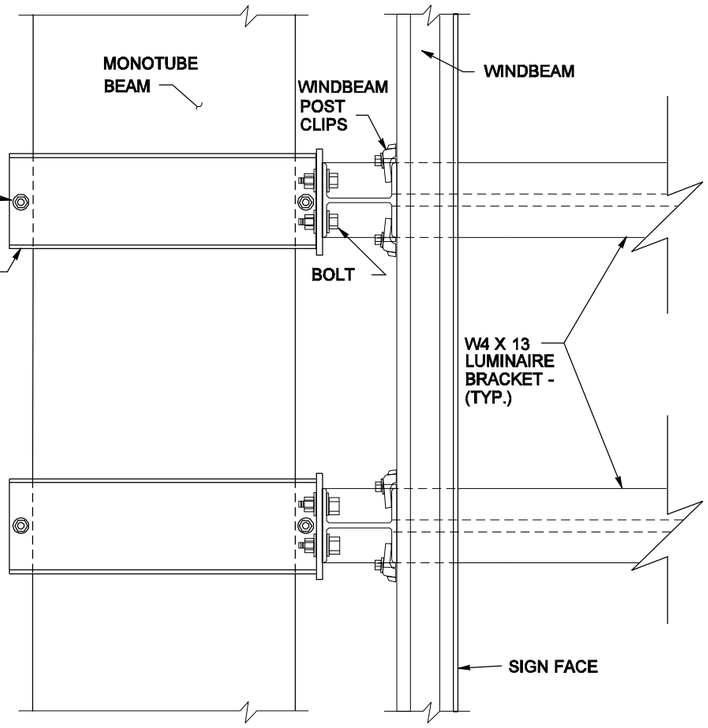

PLAN

JEROME A. WEIGEL
STATE OF WASHINGTON
14742
REGISTERED
PROFESSIONAL ENGINEER

EXPIRES JUNE 29, 2004

NOTE: THIS PLAN IS NOT A LEGAL ENGINEERING DOCUMENT BUT AN ELECTRONIC DUPLICATE. THE ORIGINAL, SIGNED BY THE ENGINEER AND APPROVED FOR PUBLICATION, IS KEPT ON FILE AT THE WASHINGTON STATE DEPARTMENT OF TRANSPORTATION. A COPY MAY BE OBTAINED UPON REQUEST.

OVERHEAD SIGN MOUNTING DETAILS STANDARD PLAN G-9a

SHEET 3 OF 4 SHEETS

APPROVED FOR PUBLICATION

Harold J. Peterfeso — STATE DESIGN ENGINEER

06-25-02 — DATE

Washington State Department of Transportation

EFFECTIVE: APRIL 2, 2007 TO JANUARY 6, 2008

EFFECTIVE: APRIL 2, 2007 TO JANUARY 6, 2008

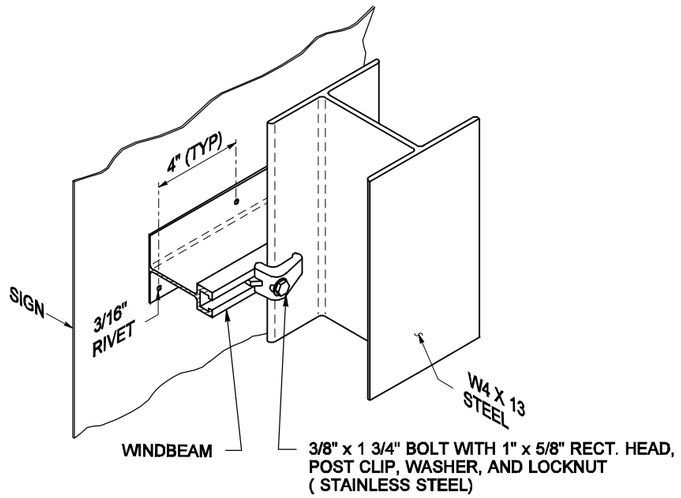

WINDBEAM CONNECTION DETAIL

(ON BOTH SIDES OF WIDE FLANGE)

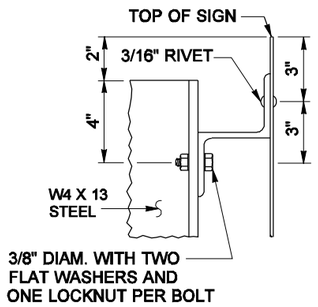

BOLTED CONNECTION DETAIL

(ON BOTH SIDES OF WIDE FLANGE)

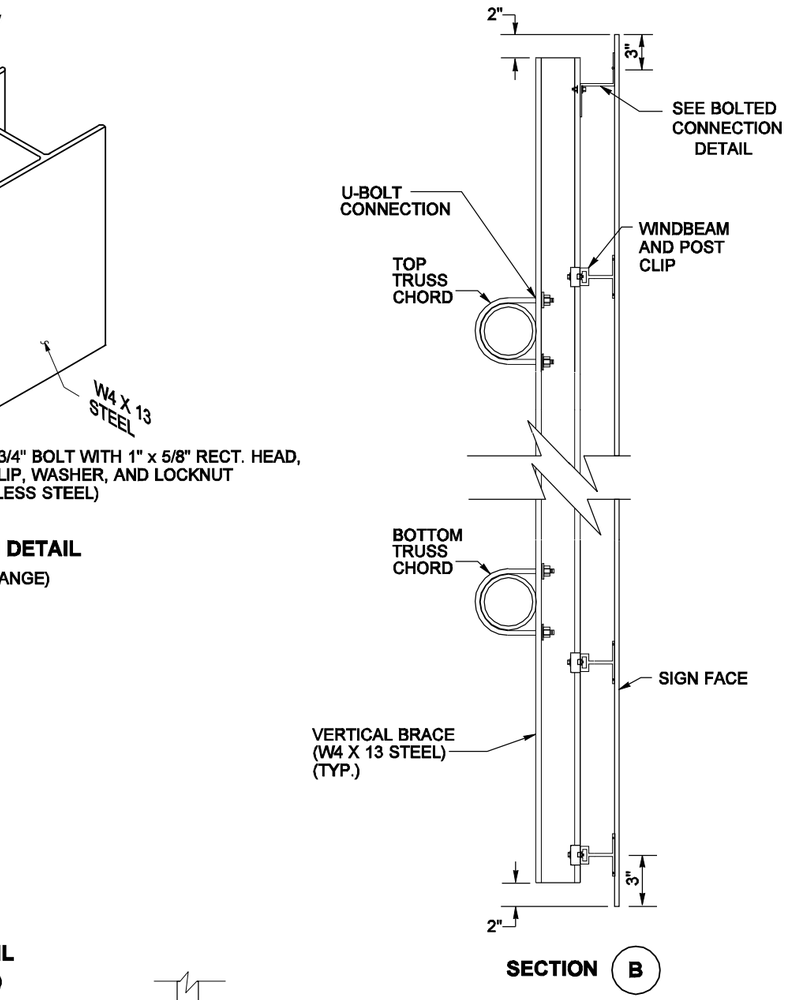

SECTION (B)

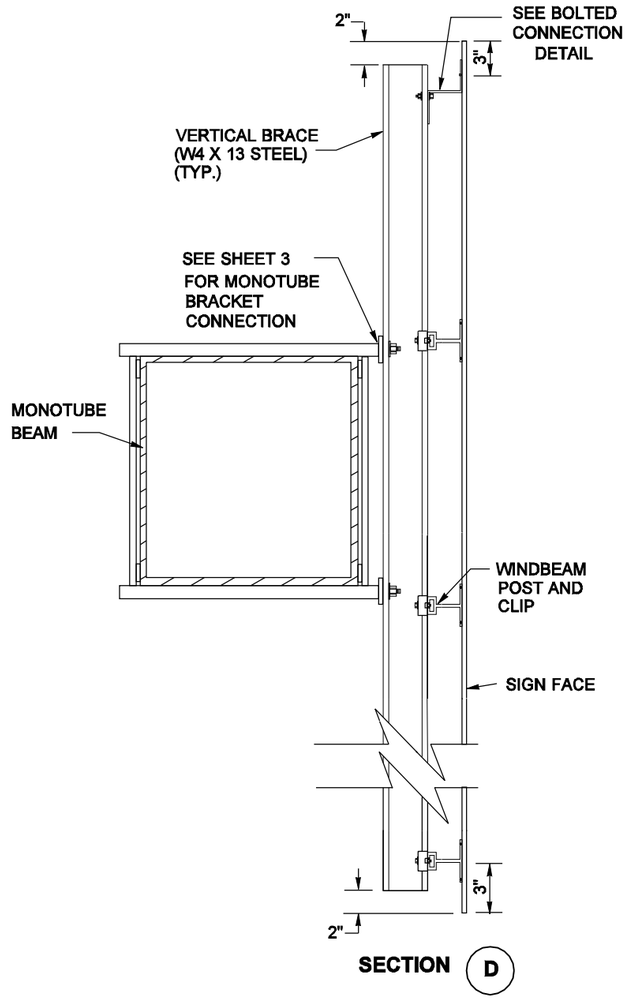

SECTION (D)

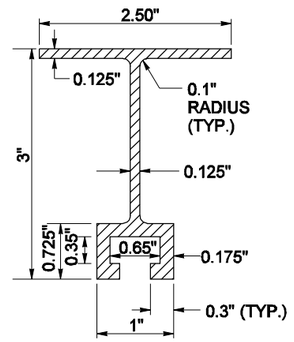

ALUMINUM WINDBEAM DETAIL

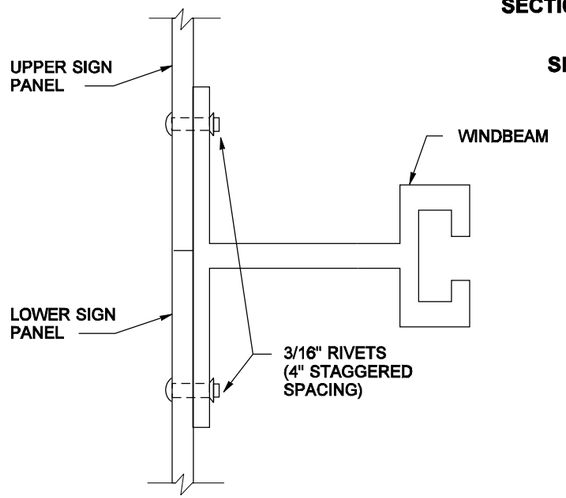

HORIZONTAL SIGN PANEL SPLICE

SIGN ATTACHMENT DETAILS FOR TRUSS-TYPE AND MONOTUBE STRUCTURES

JEROME A. WEIGEL
STATE OF WASHINGTON
14742
REGISTERED
PROFESSIONAL ENGINEER

EXPIRES JUNE 29, 2004

NOTE: THIS PLAN IS NOT A LEGAL ENGINEERING DOCUMENT BUT AN ELECTRONIC DUPLICATE. THE ORIGINAL, SIGNED BY THE ENGINEER AND APPROVED FOR PUBLICATION, IS KEPT ON FILE AT THE WASHINGTON STATE DEPARTMENT OF TRANSPORTATION. A COPY MAY BE OBTAINED UPON REQUEST.

OVERHEAD SIGN MOUNTING DETAILS STANDARD PLAN G-9a

SHEET 4 OF 4 SHEETS

APPROVED FOR PUBLICATION

Harold J. Peterfeso — STATE DESIGN ENGINEER — *06-25-02* — DATE

Washington State Department of Transportation

EFFECTIVE: APRIL 2, 2007 TO JANUARY 6, 2008

EFFECTIVE: APRIL 2, 2007 TO JANUARY 6, 2008

DRAWN BY: ELENA BRUNSTEIN

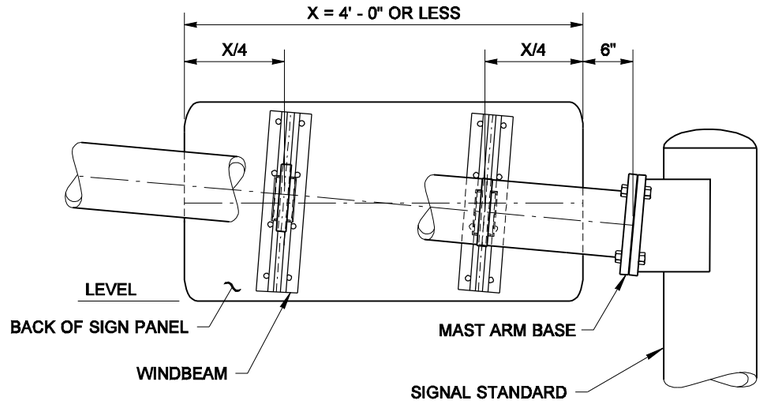

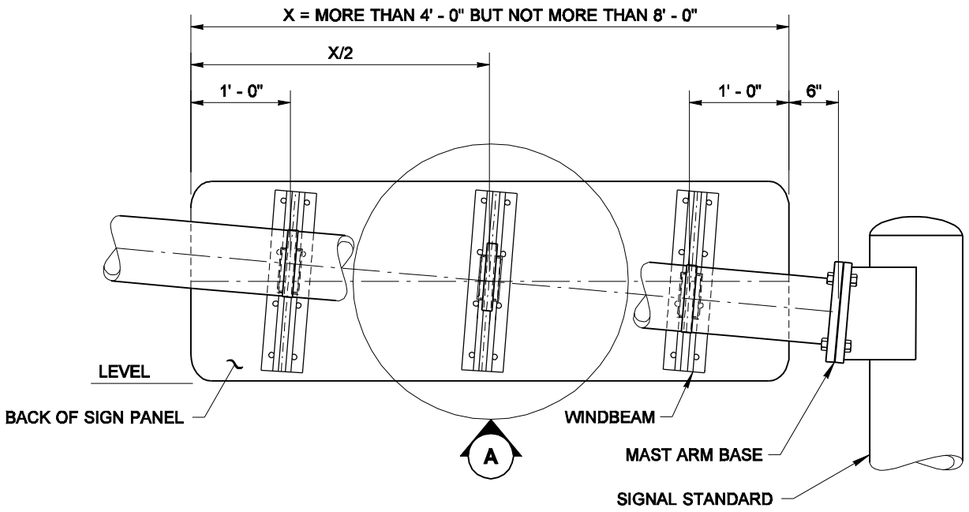

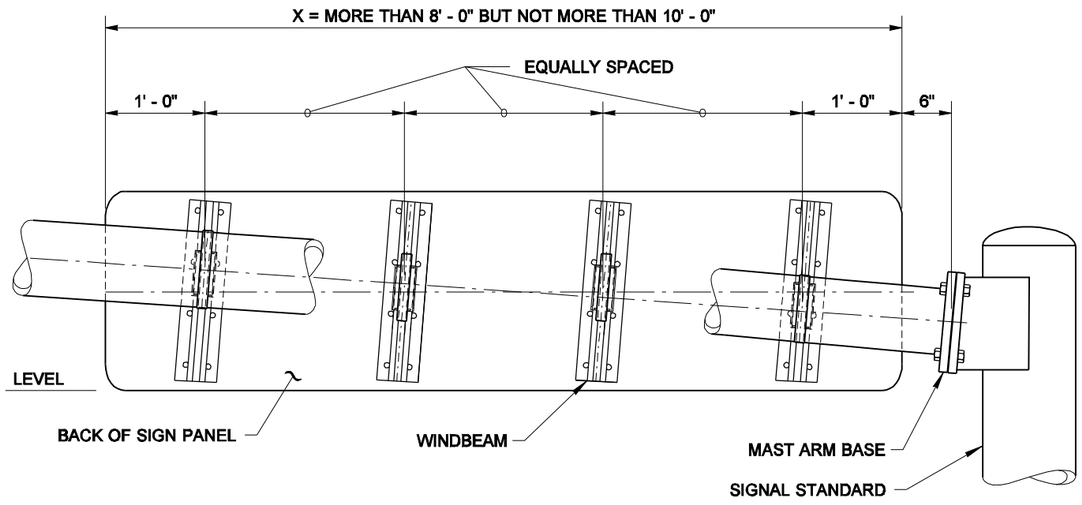

MAST ARM MOUNTED STREET NAME SIGNS

NOTES

1. Mounting brackets with steel straps shall be a stainless steel band and buckle system product or an approved equal. Mounting brackets shall be universal channel clamps; steel straps shall be 3/4" wide and 0.030" thick.
2. All signs shall be installed with horizontal edges level. All signs installed on mast arms, signal or light standards require windbeams. A skewed windbeam is required only when the sign is mounted within 12" of the mast arm base (see Detail "A").

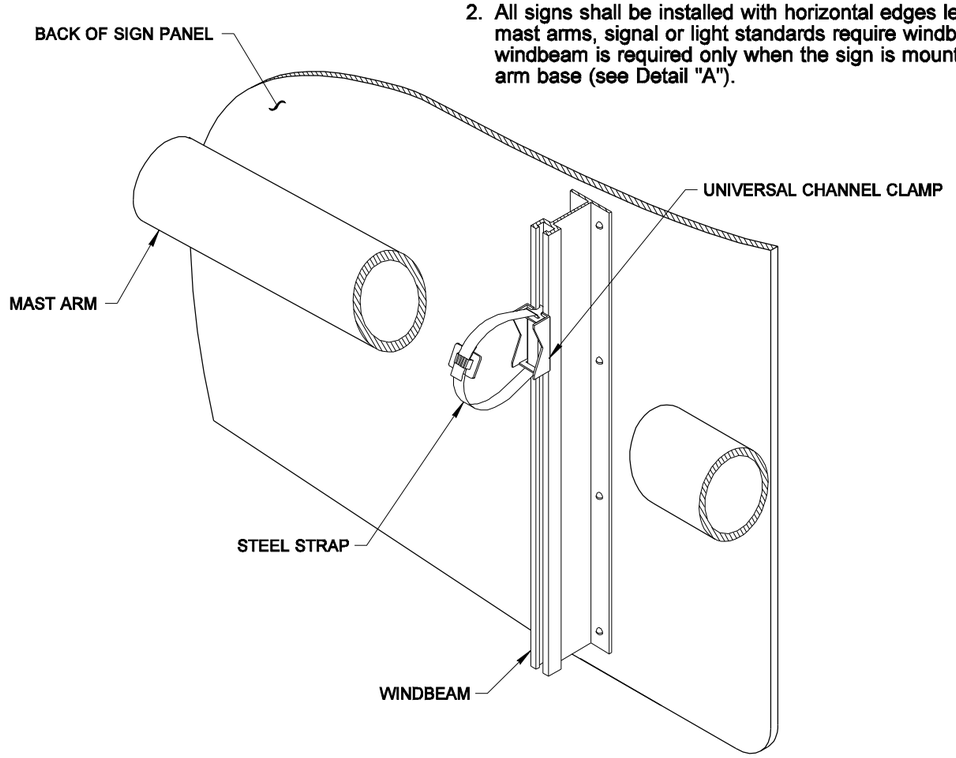

TYPICAL MAST ARM INSTALLATION

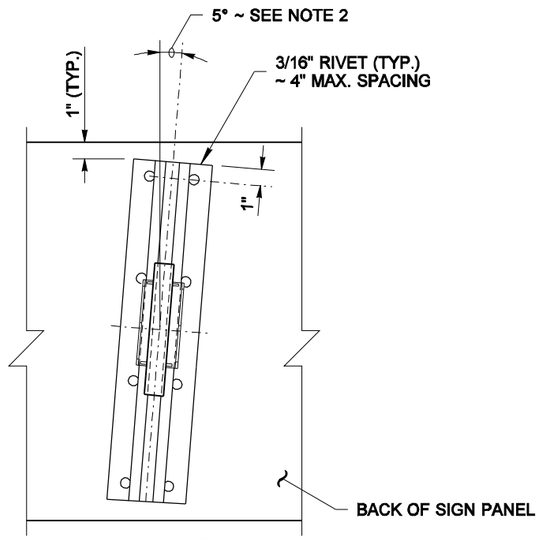

DETAIL (A)

TYPICAL FOR EACH CONNECTION

THEODORE J. TREPANIER
STATE OF WASHINGTON
25335
REGISTERED
PROFESSIONAL ENGINEER

EXPIRES AUGUST 9, 2007

NOTE: THIS PLAN IS NOT A LEGAL ENGINEERING DOCUMENT BUT AN ELECTRONIC DUPLICATE. THE ORIGINAL, SIGNED BY THE ENGINEER AND APPROVED FOR PUBLICATION, IS KEPT ON FILE AT THE WASHINGTON STATE DEPARTMENT OF TRANSPORTATION. A COPY MAY BE OBTAINED UPON REQUEST.

SIGN INSTALLATION ON SIGNAL AND LIGHT STANDARDS STANDARD PLAN G-9b

SHEET 1 OF 2 SHEET

APPROVED FOR PUBLICATION

Harold J. Peterfeso — STATE DESIGN ENGINEER — *06-08-06* — DATE

Washington State Department of Transportation

EFFECTIVE: APRIL 2, 2007 TO JANUARY 6, 2008

EFFECTIVE: APRIL 2, 2007 TO JANUARY 6, 2008

DRAWN BY: ELENA BRUNSTEIN

DIMENSIONS	
A	B
3' - 0"	9"
4' - 0"	1' - 0"

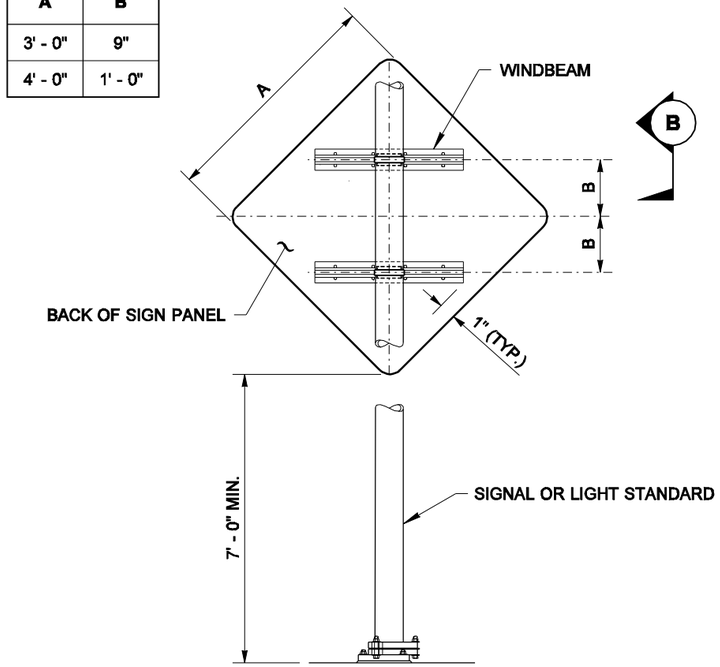

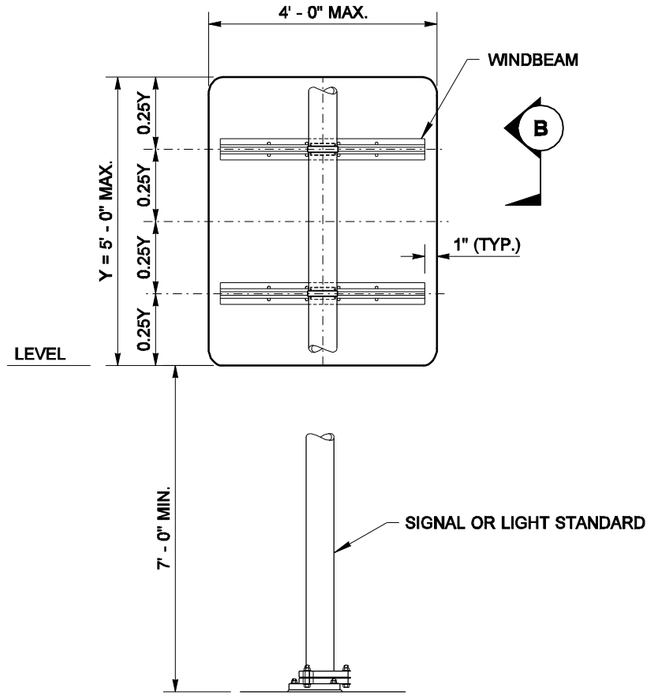

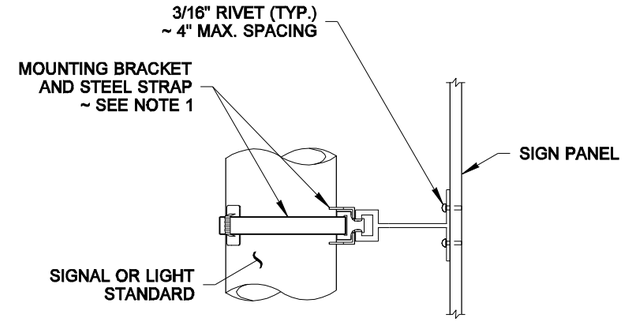

DETAIL VIEW (B)

SIGN INSTALLATION ON LIGHT STANDARD

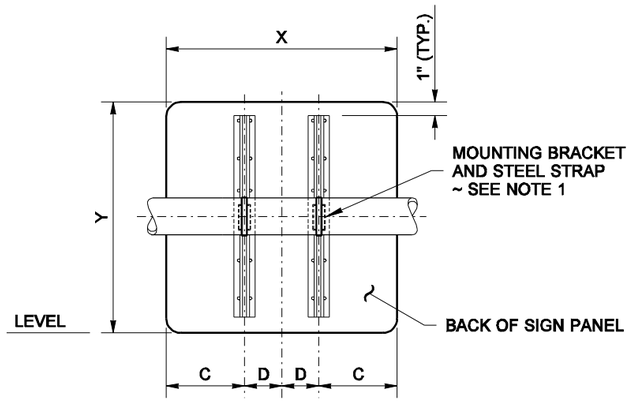

DIMENSIONS			
X	Y	C	D
3' - 0"	2' - 6"	1' - 0"	6"
3' - 0"	3' - 0"	1' - 0"	6"
4' - 0"	2' - 6"	1' - 3"	9"

MAST ARM MOUNTED LANE USE SIGNS

THEODORE J. TREPANIER
STATE OF WASHINGTON
25335
REGISTERED
PROFESSIONAL ENGINEER

EXPIRES AUGUST 9, 2007

NOTE: THIS PLAN IS NOT A LEGAL ENGINEERING DOCUMENT BUT AN ELECTRONIC DUPLICATE. THE ORIGINAL, SIGNED BY THE ENGINEER AND APPROVED FOR PUBLICATION, IS KEPT ON FILE AT THE WASHINGTON STATE DEPARTMENT OF TRANSPORTATION. A COPY MAY BE OBTAINED UPON REQUEST.

SIGN INSTALLATION ON SIGNAL AND LIGHT STANDARDS STANDARD PLAN G-9b

SHEET 2 OF 2 SHEET

APPROVED FOR PUBLICATION

Harold J. Peterfeso — STATE DESIGN ENGINEER

06-08-06 — DATE

Washington State Department of Transportation

EFFECTIVE: APRIL 2, 2007 TO JANUARY 6, 2008

EFFECTIVE: APRIL 2, 2007 TO JANUARY 6, 2008

EFFECTIVE: APRIL 2, 2007 TO JANUARY 6, 2008

DRAWN BY: ELENA BRUNSTEIN

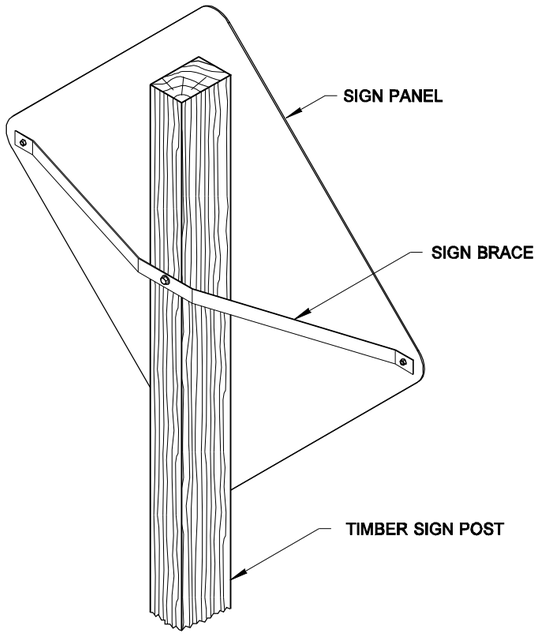

SIGN BRACE ON TIMBER POST

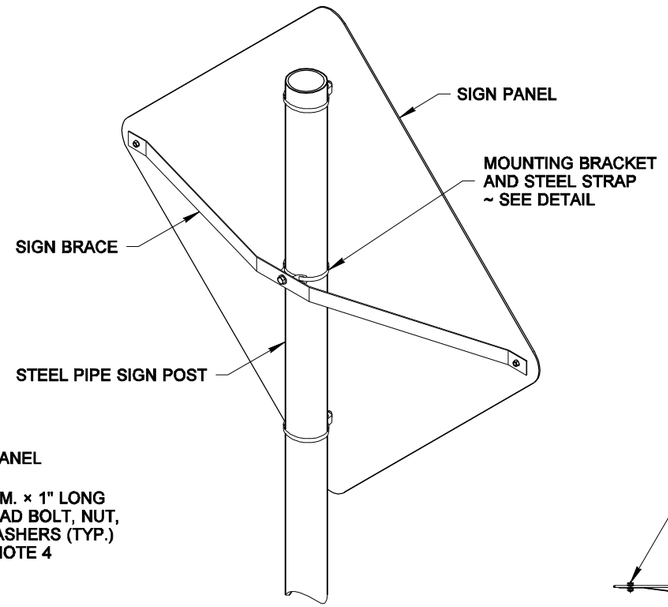

SIGN BRACE ON STEEL PIPE

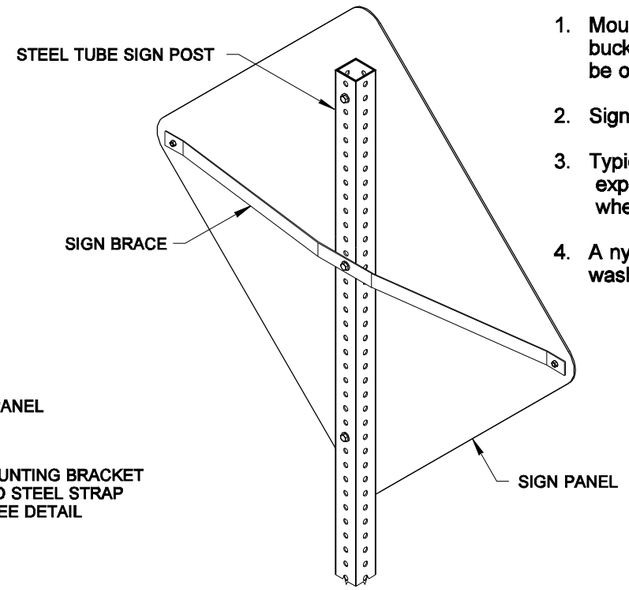

SIGN BRACE ON STEEL TUBE

NOTES

1. Mounting brackets with steel straps shall be a stainless steel band and buckle system product or an approved equal. Mounting brackets shall be one bolt, flared leg; steel straps shall be 3/4" wide and 0.030" thick.
2. Sign braces are only installed when specified in the contract.
3. Typically braces are necessary on large sign panels that are exposed to high winds, traffic generated wind buffeting, or when snow thrown from plows might impact the sign.
4. A nylon washer shall be placed between the sign and the steel washer when the sign face has Type 3 or 4 sheeting.

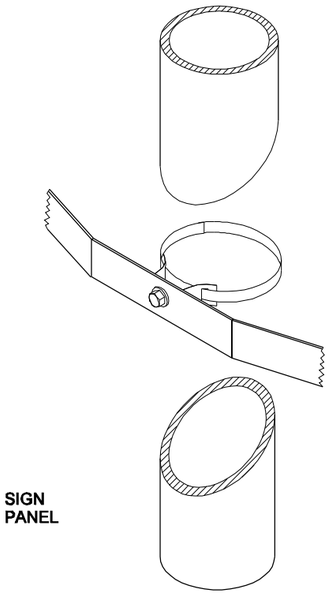

MOUNTING BRACKET AND STEEL STRAP DETAIL

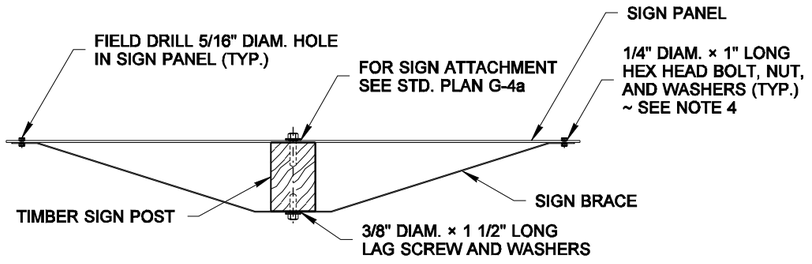

PLAN

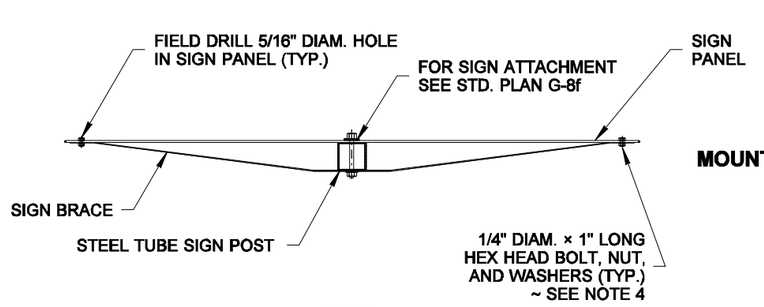

PLAN

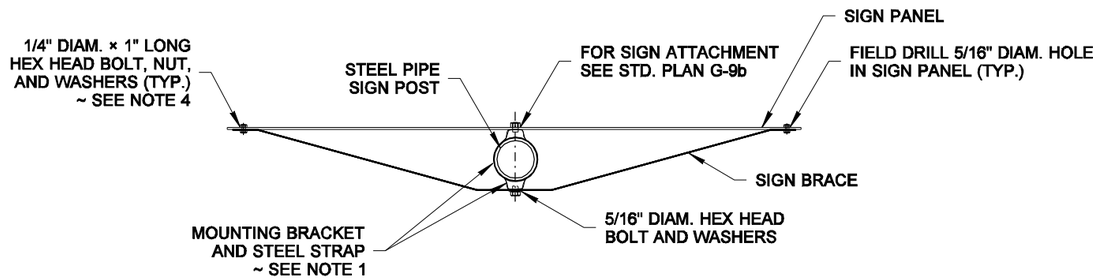

PLAN

THEODORE J. TREPANIER
STATE OF WASHINGTON
25335
REGISTERED
PROFESSIONAL ENGINEER

EXPIRES AUGUST 9, 2007

NOTE: THIS PLAN IS NOT A LEGAL ENGINEERING DOCUMENT BUT AN ELECTRONIC DUPLICATE. THE ORIGINAL, SIGNED BY THE ENGINEER AND APPROVED FOR PUBLICATION, IS KEPT ON FILE AT THE WASHINGTON STATE DEPARTMENT OF TRANSPORTATION. A COPY MAY BE OBTAINED UPON REQUEST.

SIGN BRACING

STANDARD PLAN G-9d

SHEET 1 OF 2 SHEETS

APPROVED FOR PUBLICATION

Harold J. Peterfeso — STATE DESIGN ENGINEER — *06-08-06* — DATE

Washington State Department of Transportation

EFFECTIVE: APRIL 2, 2007 TO JANUARY 6, 2008

EFFECTIVE: APRIL 2, 2007 TO JANUARY 6, 2008

EFFECTIVE: APRIL 2, 2007 TO JANUARY 6, 2008
EFFECTIVE: APRIL 2, 2007 TO JANUARY 6, 2008

DRAWN BY: ELENA BRUNSTEIN

SIGN BRACE DIMENSIONS				
	SIGN TYPE			
	YIELD	DIAMOND-SHAPED	OTHERS	
A	1/3 SIGN WIDTH - 1 3/4"	1/2 SIGN WIDTH - 2 1/4"	1/2 SIGN WIDTH - 1"	
	SIGN POST TYPE			
	4×6 OR 6×6 TIMBER POST	6×8 TIMBER POST	3" DIAM. STEEL PIPE	2 1/2" SQUARE TUBE
B	5 1/2"	7 1/2"	4 3/4"	2 1/2"

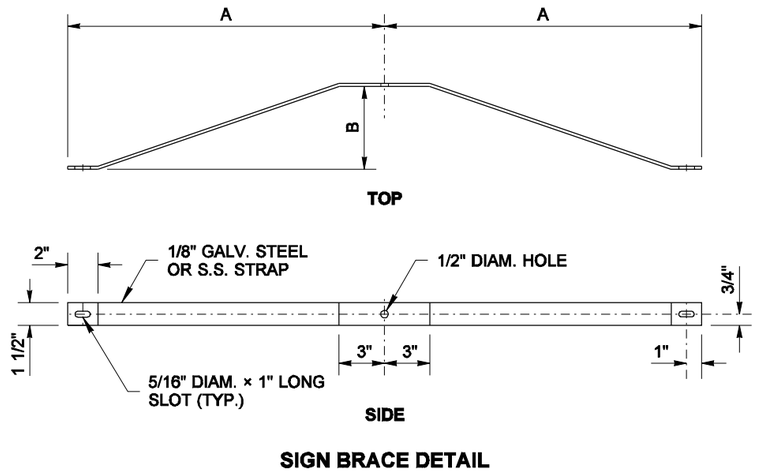

SIGN BRACE DETAIL

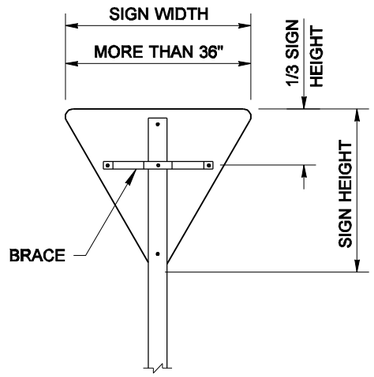

YIELD SIGN

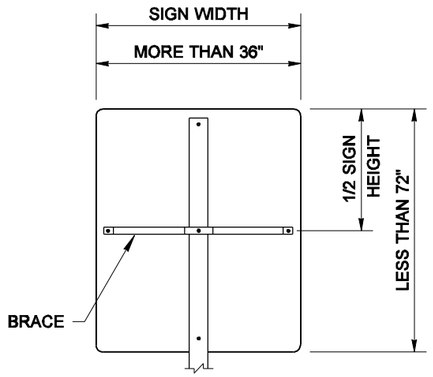

SMALL RECTANGULAR SIGN

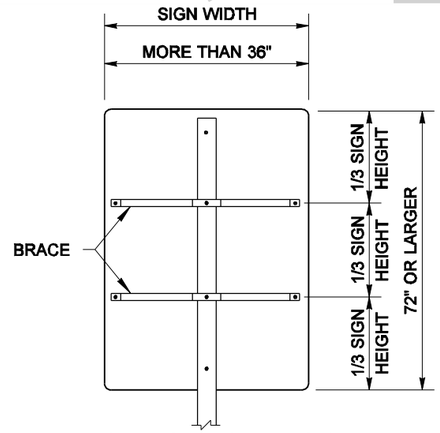

LARGE RECTANGULAR SIGN

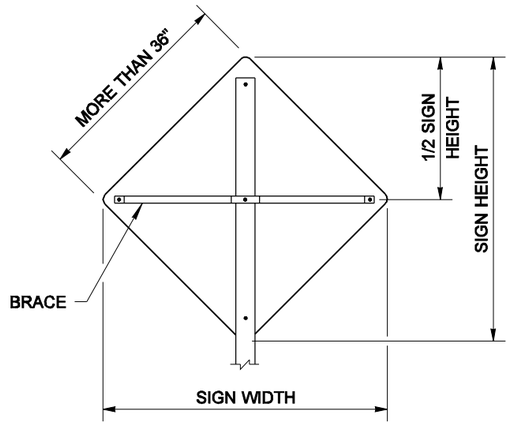

DIAMOND-SHAPED SIGN

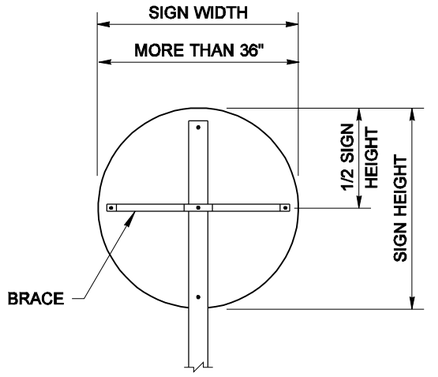

RAILROAD WARNING SIGN

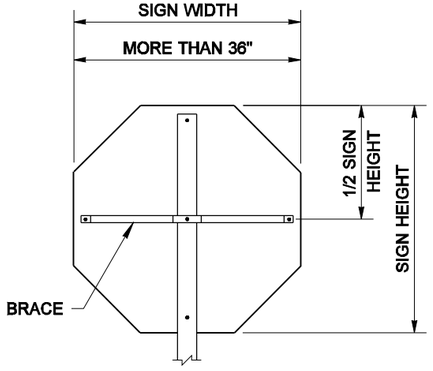

STOP SIGN

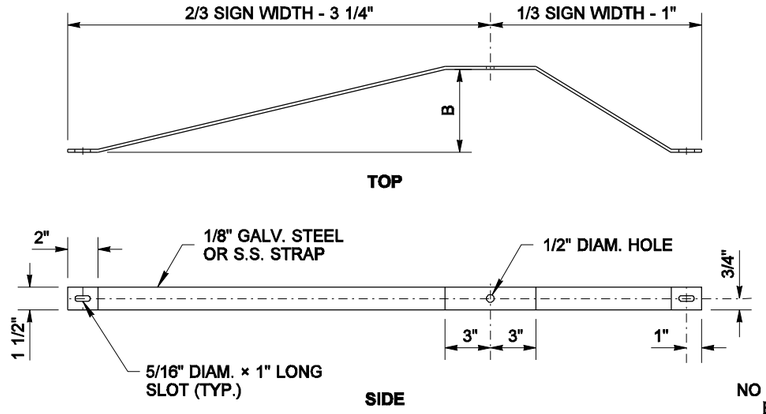

NO PASSING ZONE SIGN BRACE DETAIL

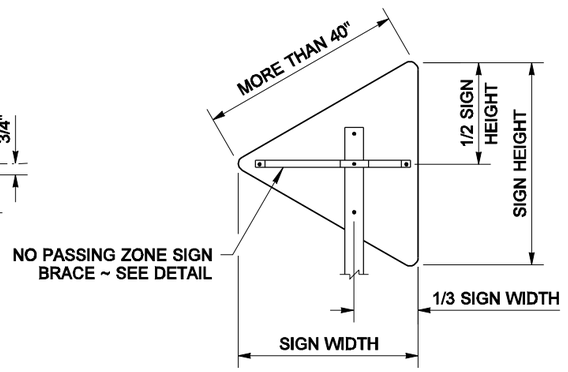

NO PASSING ZONE SIGN

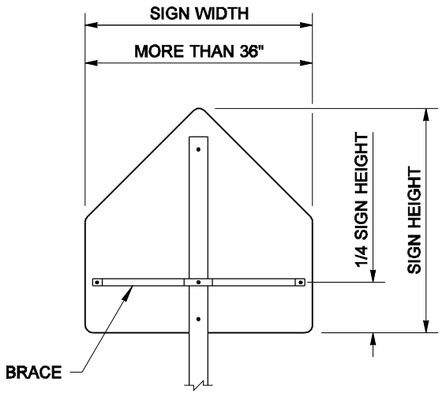

SCHOOL ZONE SIGN

SIGN BRACE PLACEMENT

THEODORE J. TREPANIER
STATE OF WASHINGTON
25335
REGISTERED
PROFESSIONAL ENGINEER
EXPIRES AUGUST 9, 2007

NOTE: THIS PLAN IS NOT A LEGAL ENGINEERING DOCUMENT BUT AN ELECTRONIC DUPLICATE. THE ORIGINAL, SIGNED BY THE ENGINEER AND APPROVED FOR PUBLICATION, IS KEPT ON FILE AT THE WASHINGTON STATE DEPARTMENT OF TRANSPORTATION. A COPY MAY BE OBTAINED UPON REQUEST.

SIGN BRACING

STANDARD PLAN G-9d

SHEET 2 OF 2 SHEETS

APPROVED FOR PUBLICATION

Harold J. Peterfeso — STATE DESIGN ENGINEER — *06-08-06* — DATE

Washington State Department of Transportation

EFFECTIVE: APRIL 2, 2007 TO JANUARY 6, 2008
EFFECTIVE: APRIL 2, 2007 TO JANUARY 6, 2008

EFFECTIVE: APRIL 2, 2007 TO JANUARY 6, 2008

DRAWN BY: MARK SUJKA

GUIDE POST REFLECTIVE SHEETING APPLICATIONS

TYPE W	TYPE WW	TYPE Y	TYPE YY	TYPE G1 (STD. PLAN H-1d)	TYPE G2 (STD. PLAN H-1d)
○	◫	●	⊕	◫ G1	◫ G2
FACING TRAFFIC: 3" × 8" WHITE	FACING TRAFFIC: 3" × 8" WHITE; BACK SIDE: 3" × 4" WHITE, 4", 3" × 4" WHITE	FACING TRAFFIC: 3" × 8" YELLOW	FACING TRAFFIC: 3" × 8" YELLOW; BACK SIDE: 3" × 8" YELLOW	FACING TRAFFIC: 3" × 8" WHITE, 4", 8" GREEN; BACK SIDE: 3" × 4" WHITE, 4", 4" WHITE	FACING TRAFFIC: 3" × 8" WHITE; BACK SIDE: 3" × 4" WHITE, 4", 4" WHITE, 4", 8" GREEN

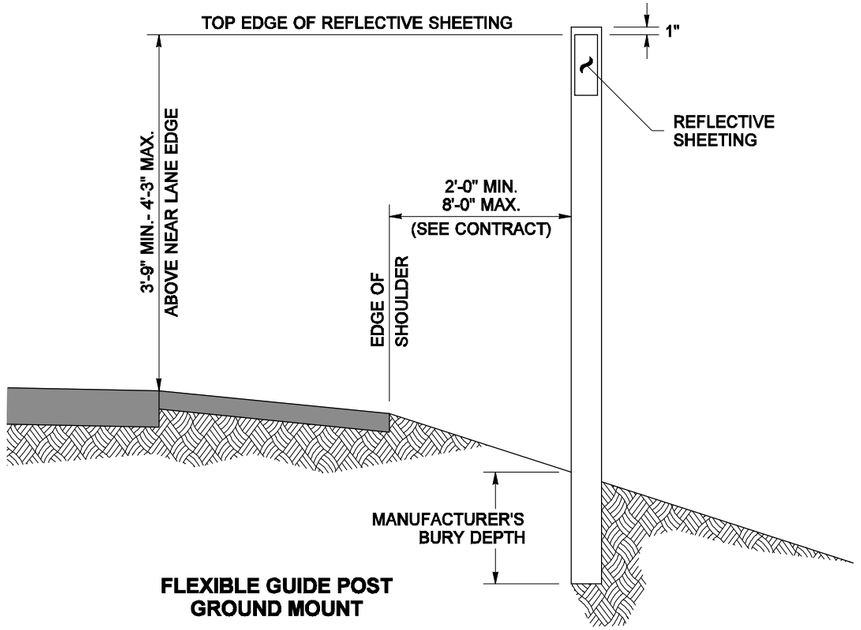

FLEXIBLE GUIDE POST GROUND MOUNT

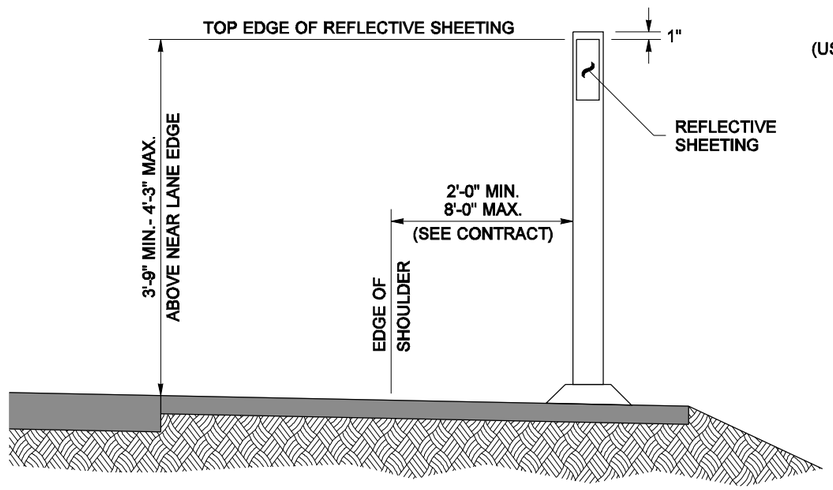

FLEXIBLE GUIDE POST SURFACE MOUNT

NOTES

1. When guardrail runs concurrent, the contractor shall either:
   A. Drive the flexible guide post in line with the guardrail posts, or
   B. Mount the shorter flexible guide post onto the guardrail post.
2. Guide posts shall be fastened to the guardrail posts using two 2" x 3/8" lag screws with washers, along centerline of post. Also acceptable is any approved method submitted by the guide post manufacturer.
3. When concrete barrier runs concurrent, the contractor shall mount barrier delineators where guideposts are required.

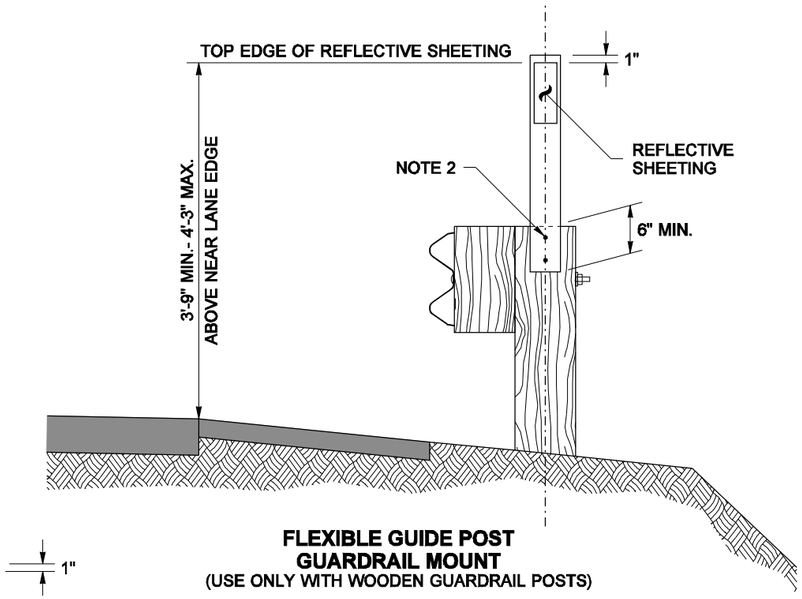

FLEXIBLE GUIDE POST GUARDRAIL MOUNT
(USE ONLY WITH WOODEN GUARDRAIL POSTS)

TOBY D. RICKMAN
STATE OF WASHINGTON
24655
REGISTERED
PROFESSIONAL ENGINEER

EXPIRES OCTOBER 26, 2002

NOTE: THIS PLAN IS NOT A LEGAL ENGINEERING DOCUMENT BUT AN ELECTRONIC DUPLICATE. THE ORIGINAL, SIGNED BY THE ENGINEER AND APPROVED FOR PUBLICATION, IS KEPT ON FILE AT THE WASHINGTON STATE DEPARTMENT OF TRANSPORTATION. A COPY MAY BE OBTAINED UPON REQUEST.

GUIDE POSTS

STANDARD PLAN H-1

SHEET 1 OF 1 SHEET

APPROVED FOR PUBLICATION

Harold J. Peterfeso — STATE DESIGN ENGINEER — *01-10-02* — DATE

Washington State Department of Transportation

EFFECTIVE: APRIL 2, 2007 TO JANUARY 6, 2008

EFFECTIVE: APRIL 2, 2007 TO JANUARY 6, 2008

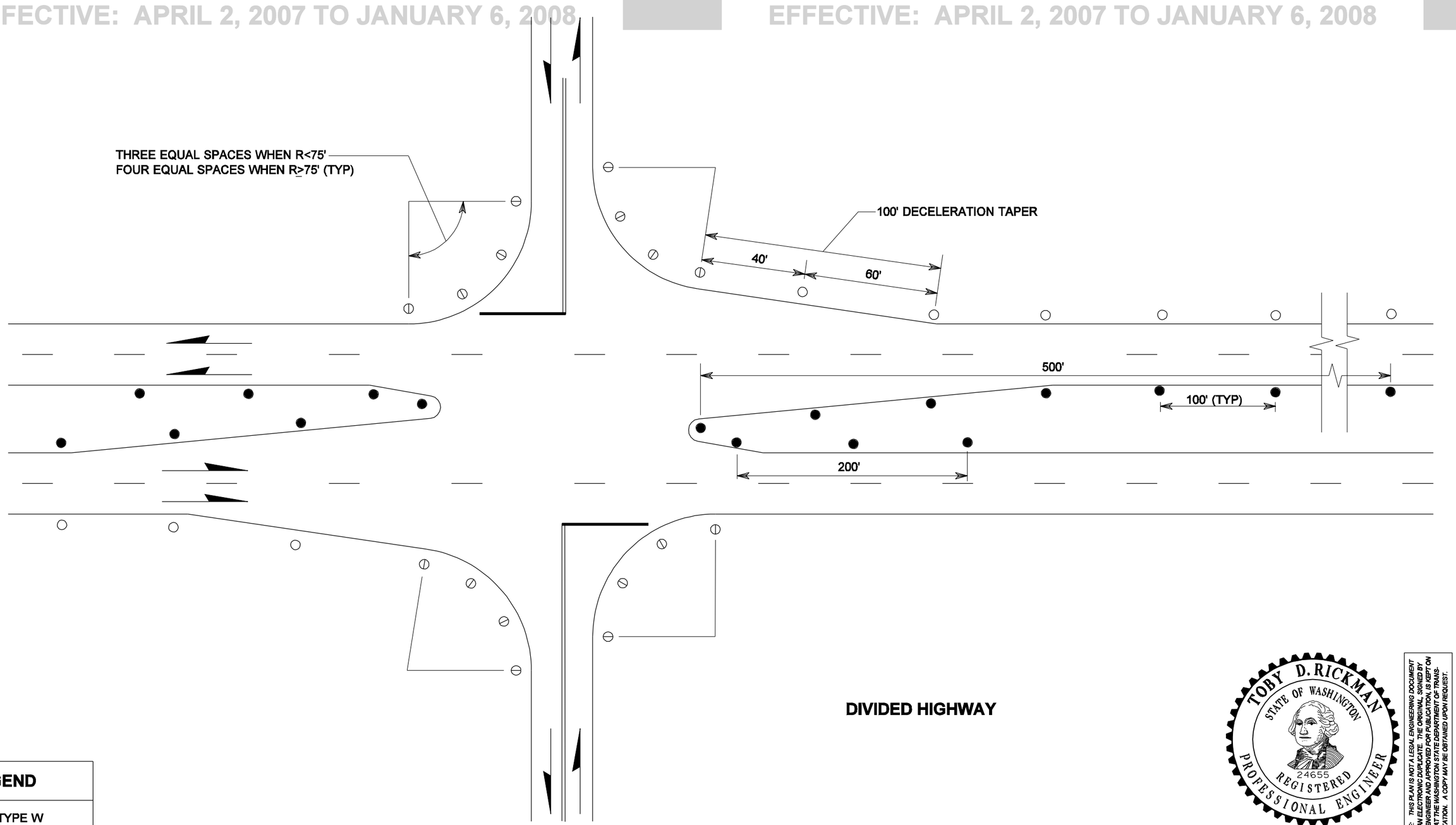

LEGEND	
○	TYPE W
●	TYPE Y
◐	TYPE WW

SEE TABLE IN STANDARD PLAN H-1 FOR DEFINITION OF GUIDE POST TYPES

DIVIDED HIGHWAY

TOBY D. RICKMAN
STATE OF WASHINGTON
24655
REGISTERED
PROFESSIONAL ENGINEER

EXPIRES OCTOBER 26, 2000

NOTE: THIS PLAN IS NOT A LEGAL ENGINEERING DOCUMENT BUT AN ELECTRONIC DUPLICATE. THE ORIGINAL, SIGNED BY THE ENGINEER AND APPROVED FOR PUBLICATION, IS KEPT ON FILE AT THE WASHINGTON STATE DEPARTMENT OF TRANSPORTATION. A COPY MAY BE OBTAINED UPON REQUEST.

GUIDE POST PLACEMENT GRADE INTERSECTION STANDARD PLAN H-1a

DATE	REVISION	BY
3/00	DELETED "RED REFLECTIVE SHEETING".	TWS

APPROVED FOR PUBLICATION

Clifford E. Mansfield *4/14/00*

DEPUTY STATE DESIGN ENGINEER — DATE

WASHINGTON STATE DEPARTMENT OF TRANSPORTATION
OLYMPIA, WASHINGTON

EFFECTIVE: APRIL 2, 2007 TO JANUARY 6, 2008

EFFECTIVE: APRIL 2, 2007 TO JANUARY 6, 2008

EFFECTIVE: APRIL 2, 2007 TO JANUARY 6, 2008

DRAWN BY: ADAM COCHRAN

LEGEND	
○	TYPE W
●	TYPE Y

See table in Standard Plan H-1 for definition of guide post types

NOTES

1. See plans for guide post requirements between interchanges.
2. Guide posts shall be placed at 100' on ramp tangents and tapers.
3. "S" dimension shown on Standard Plan H-1c or 100', whichever is smaller.
4. One half of "S" dimension shown on Standard Plan H-1c or 50', whichever is smaller.
5. Two spaces at 100'.
6. Three equal spaces when R < 75', Four equal spaces when R > 75'.
7. Two equal spaces.
8. Locate the initial Guide Post so that it does not hinder the visibility of the Bridge Delineator for approaching traffic. The distance between the bridge end and the initial Guide Post shall be 50 feet maximum.

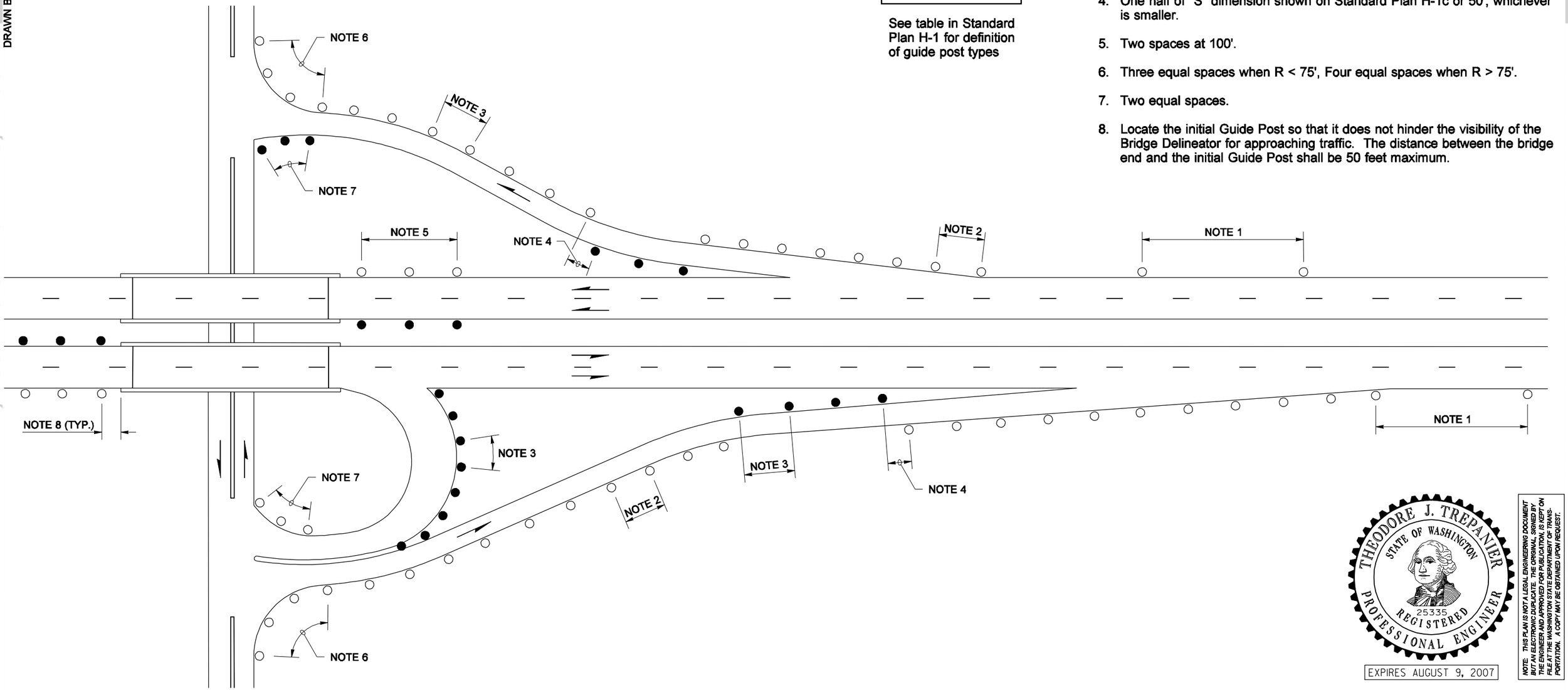

THEODORE J. TREPANIER
STATE OF WASHINGTON
25335
REGISTERED
PROFESSIONAL ENGINEER

EXPIRES AUGUST 9, 2007

NOTE: THIS PLAN IS NOT A LEGAL ENGINEERING DOCUMENT BUT AN ELECTRONIC DUPLICATE. THE ORIGINAL, SIGNED BY THE ENGINEER AND APPROVED FOR PUBLICATION, IS KEPT ON FILE AT THE WASHINGTON STATE DEPARTMENT OF TRANSPORTATION. A COPY MAY BE OBTAINED UPON REQUEST.

GUIDE POST PLACEMENT FOR INTERCHANGES

STANDARD PLAN H-1b

SHEET 1 OF 1 SHEET

APPROVED FOR PUBLICATION

Harold J. Peterfeso — STATE DESIGN ENGINEER — *06-21-06* — DATE

Washington State Department of Transportation

EFFECTIVE: APRIL 2, 2007 TO JANUARY 6, 2008

EFFECTIVE: APRIL 2, 2007 TO JANUARY 6, 2008

EFFECTIVE: APRIL 2, 2007 TO JANUARY 6, 2008

EFFECTIVE: APRIL 2, 2007 TO JANUARY 6, 2008

DRAWN BY: MARK SUJKA

GUIDE POST SPACING (FEET)	
RADIUS	S
50	20
115	25
150	30
200	35
250	40
300	50
400	55
500	65
600	70
700	75
800	80
900	85
1,000	90
1,200	100
1,700	120
2,300	140
2,900	160
3,700	180
4,500	200
5,500	220
6,500	240
7,600	260
8,800	280
10,000	300
R>10,000	300

INTERPOLATE FROM THE TABLE FOR RADII NOT SHOWN

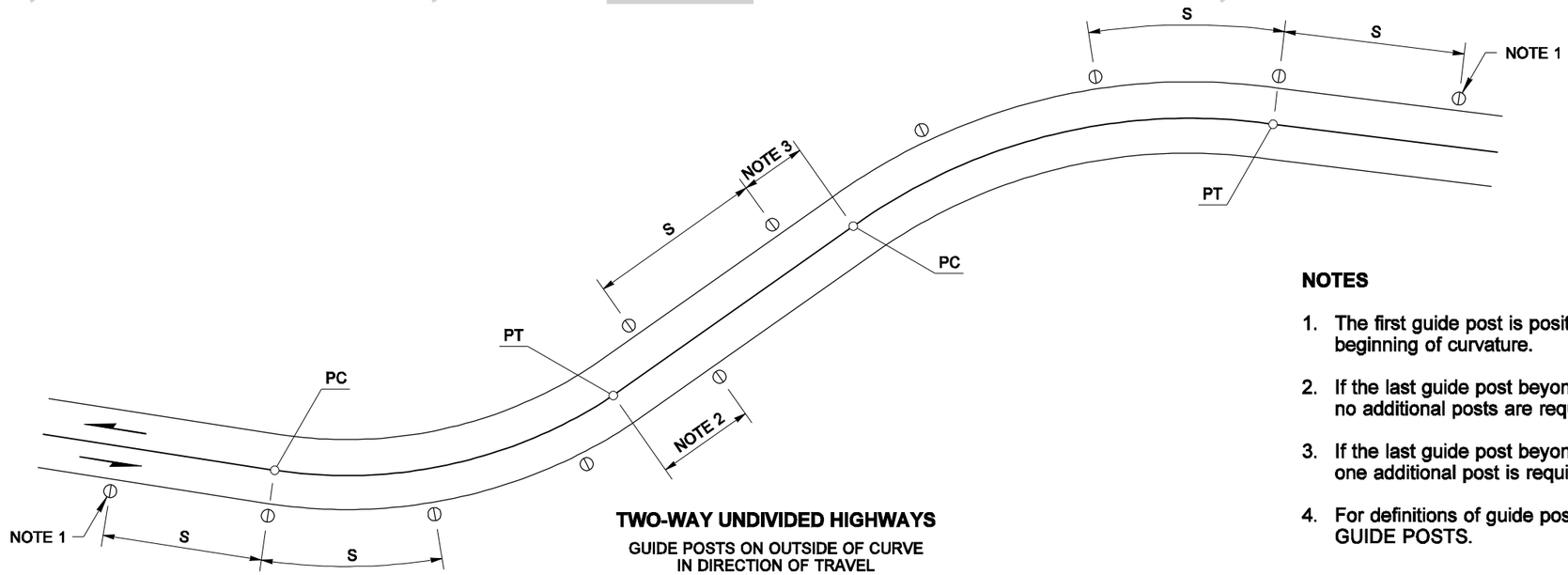

TWO-WAY UNDIVIDED HIGHWAYS

GUIDE POSTS ON OUTSIDE OF CURVE IN DIRECTION OF TRAVEL

NOTES

1. The first guide post is positioned "S" distance from the beginning of curvature.
2. If the last guide post beyond the curve is 1/2 "S" or more, no additional posts are required.
3. If the last guide post beyond the curve is less than 1/2 "S", one additional post is required.
4. For definitions of guide post types, see Standard Plan H-1, GUIDE POSTS.

LEGEND
○ TYPE W
◫ TYPE WW
● TYPE Y

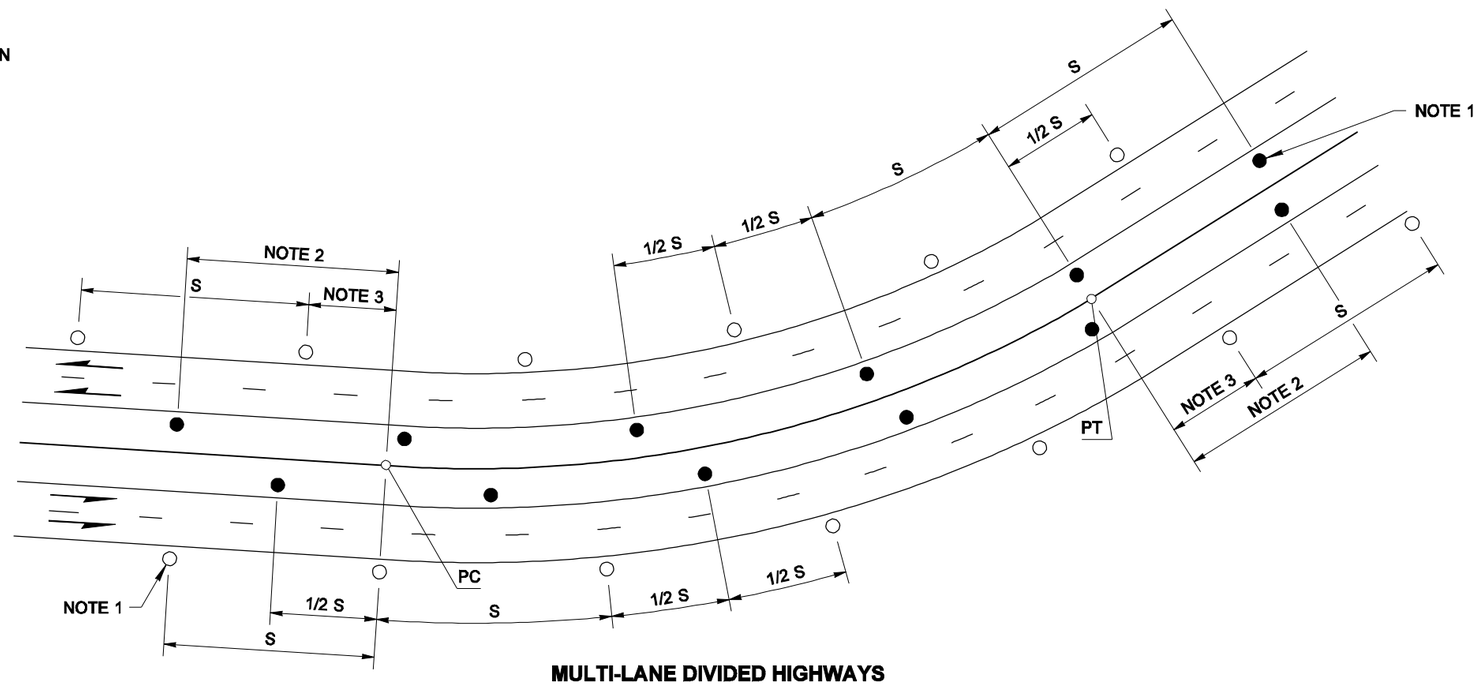

MULTI-LANE DIVIDED HIGHWAYS

GUIDE POSTS ON INSIDE AND OUTSIDE OF CURVE FOR EACH DIRECTION OF TRAVEL

R. SCOTT ZELLER
STATE OF WASHINGTON
28680
REGISTERED
PROFESSIONAL ENGINEER

EXPIRES MAY 5, 2005

NOTE: THIS PLAN IS NOT A LEGAL ENGINEERING DOCUMENT BUT AN ELECTRONIC DUPLICATE. THE ORIGINAL, SIGNED BY THE ENGINEER AND APPROVED FOR PUBLICATION, IS KEPT ON FILE AT THE WASHINGTON STATE DEPARTMENT OF TRANSPORTATION. A COPY MAY BE OBTAINED UPON REQUEST.

GUIDE POST PLACEMENT FOR HORIZONTAL CURVES

STANDARD PLAN H-1c

SHEET 1 OF 1 SHEET

APPROVED FOR PUBLICATION

Harold J. Peterfeso — STATE DESIGN ENGINEER

03-04-05 — DATE

Washington State Department of Transportation

EFFECTIVE: APRIL 2, 2007 TO JANUARY 6, 2008

EFFECTIVE: APRIL 2, 2007 TO JANUARY 6, 2008

EFFECTIVE: APRIL 2, 2007 TO JANUARY 6, 2008

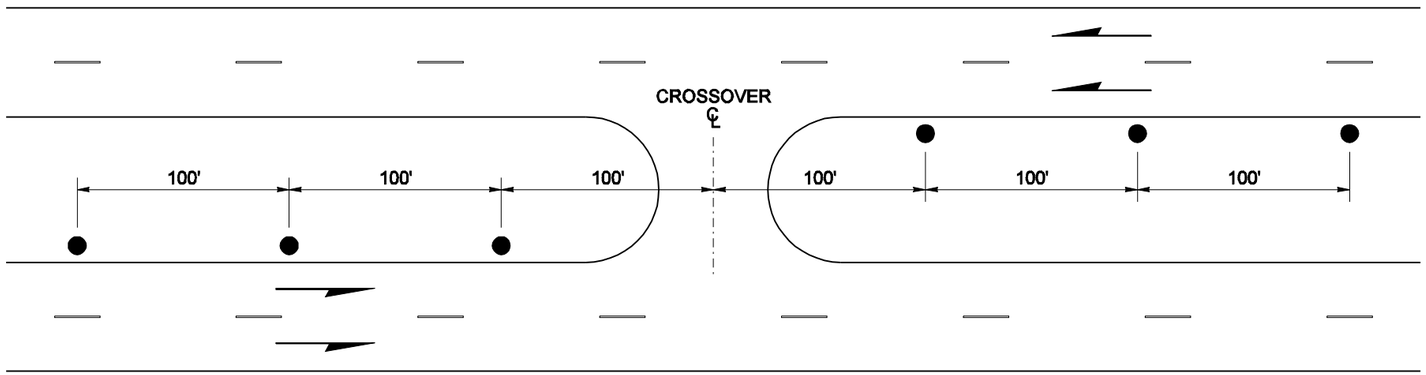

MEDIAN CROSSOVERS

LANE REDUCTIONS

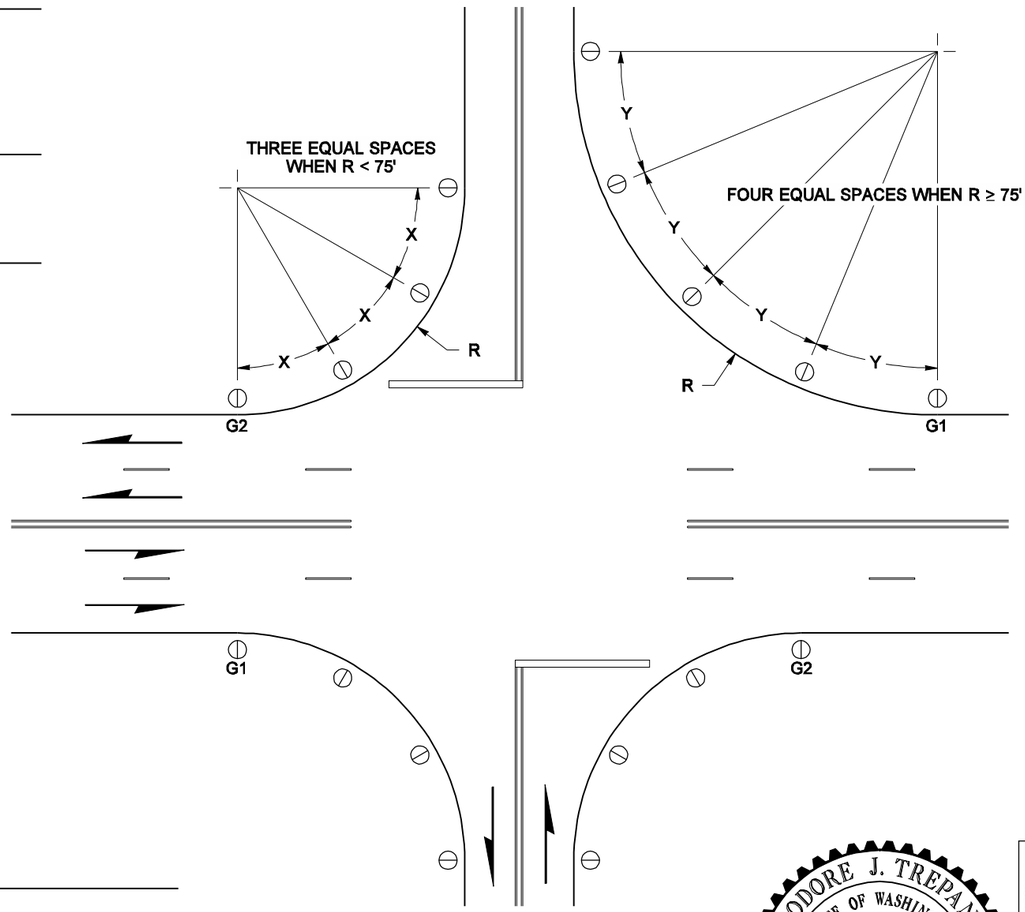

UNDIVIDED HIGHWAY
WITHOUT ILLUMINATION

LEGEND

○	TYPE W
◐	TYPE WW
●	TYPE Y
◐ G1	TYPE G1
◐ G2	TYPE G2

FOR DEFINITION OF GUIDE POST TYPES,
SEE STANDARD PLAN H-1, GUIDE POSTS

THEODORE J. TREPANIER
STATE OF WASHINGTON
25335
REGISTERED
PROFESSIONAL ENGINEER

EXPIRES AUGUST 9, 2007

NOTE: THIS PLAN IS NOT A LEGAL ENGINEERING DOCUMENT BUT AN ELECTRONIC DUPLICATE. THE ORIGINAL, SIGNED BY THE ENGINEER AND APPROVED FOR PUBLICATION, IS KEPT ON FILE AT THE WASHINGTON STATE DEPARTMENT OF TRANSPORTATION. A COPY MAY BE OBTAINED UPON REQUEST.

MISCELLANEOUS GUIDE POST PLACEMENT

STANDARD PLAN H-1d

SHEET 1 OF 1 SHEET

APPROVED FOR PUBLICATION

Harold J. Peterfeso — STATE DESIGN ENGINEER — *06-21-06* — DATE

Washington State Department of Transportation

DRAWN BY: MARK SUJKA

EFFECTIVE: APRIL 2, 2007 TO JANUARY 6, 2008

EFFECTIVE: APRIL 2, 2007 TO JANUARY 6, 2008
EFFECTIVE: APRIL 2, 2007 TO JANUARY 6, 2008

NOTES

1. Locate the initial Guide Post so that it does not hinder the visibility of the Bridge Delineator for approaching traffic. The distance between the bridge end and the initial Guide Post shall be 50 feet max.
2. Locate the initial Guide Post so that its visibility is unhindered for traffic departing the bridge. The distance between the bridge end and the initial Guide Post shall be 50 feet max.

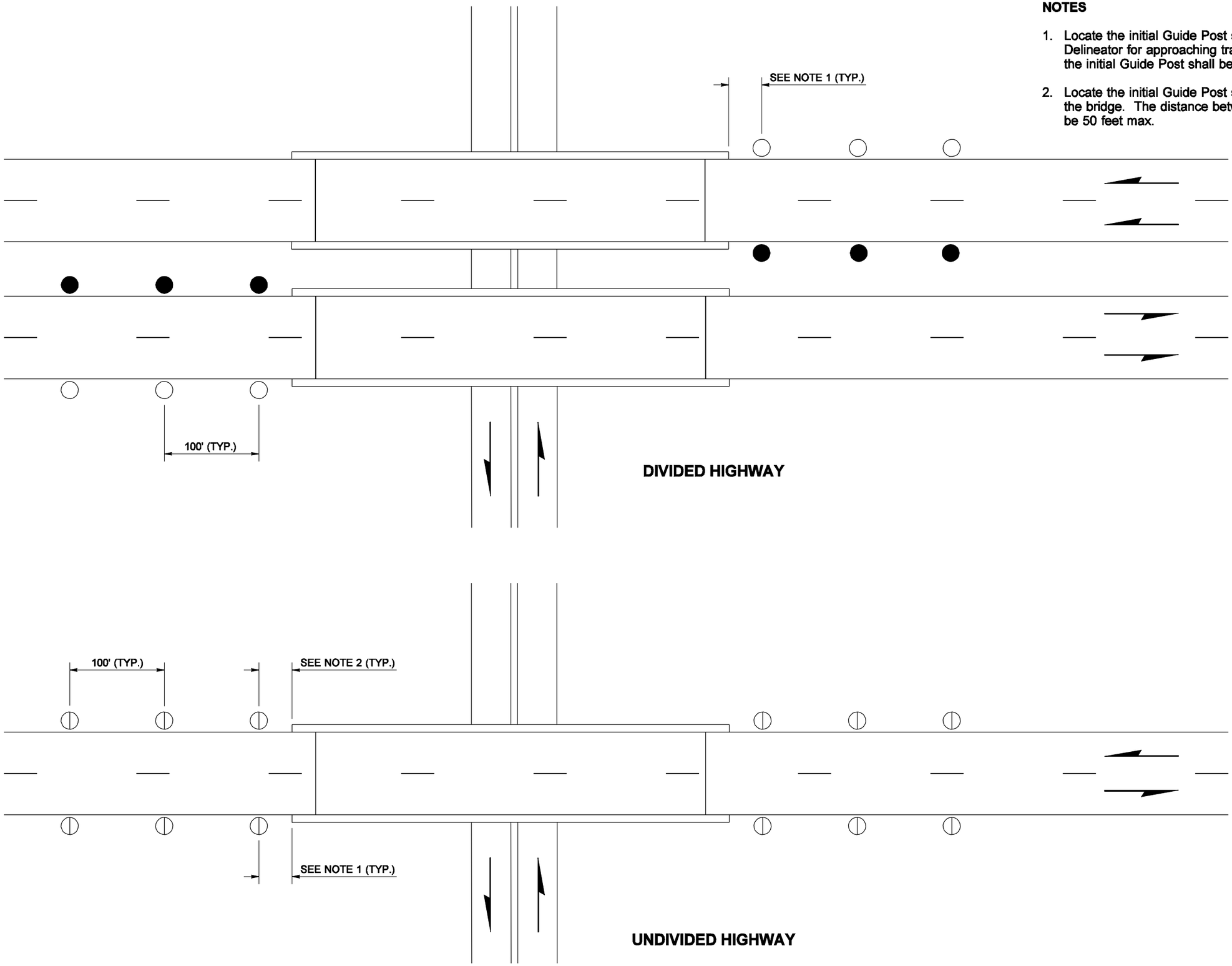

LEGEND
TYPE W
TYPE Y
TYPE WW

See table in Standard Plan H-1 for definition of guide post types

THEODORE J. TREPANIER
STATE OF WASHINGTON
25335
REGISTERED
PROFESSIONAL ENGINEER
EXPIRES AUGUST 9, 2007

NOTE: THIS PLAN IS NOT A LEGAL ENGINEERING DOCUMENT BUT AN ELECTRONIC DUPLICATE. THE ORIGINAL, SIGNED BY THE ENGINEER, AND APPROVED FOR PUBLICATION, IS KEPT ON FILE AT THE WASHINGTON STATE DEPARTMENT OF TRANSPORTATION. A COPY MAY BE OBTAINED UPON REQUEST.

GUIDE POST PLACEMENT FOR BRIDGES

STANDARD PLAN H-1e

SHEET 1 OF 1 SHEET

APPROVED FOR PUBLICATION

Harold J. Peterfeso — STATE DESIGN ENGINEER — *06-21-06* — DATE

Washington State Department of Transportation

EFFECTIVE: APRIL 2, 2007 TO JANUARY 6, 2008
EFFECTIVE: APRIL 2, 2007 TO JANUARY 6, 2008
EFFECTIVE: APRIL 2, 2007 TO JANUARY 6, 2008
EFFECTIVE: APRIL 2, 2007 TO JANUARY 6, 2008

EFFECTIVE: APRIL 2, 2007 TO JANUARY 6, 2008

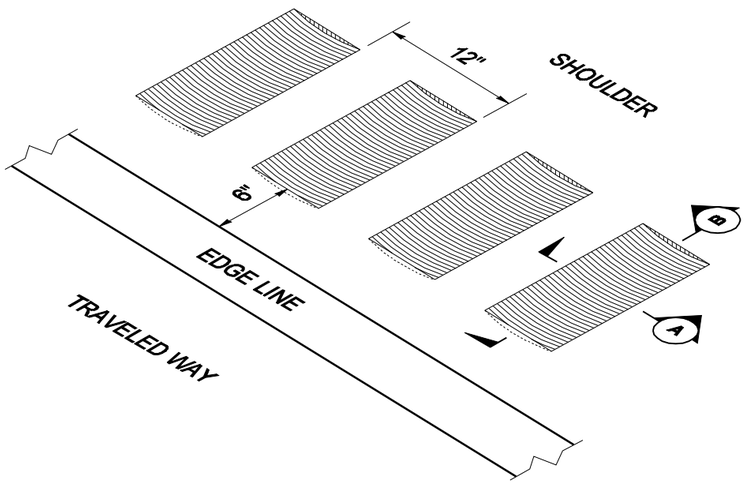

ISOMETRIC VIEW

TYPICAL SHOULDER INSTALLATION

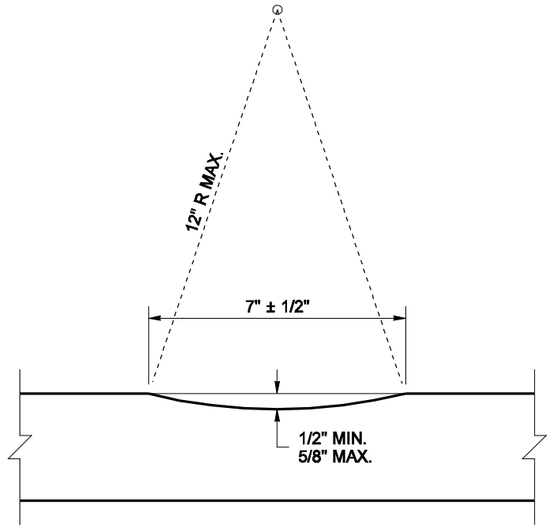

SECTION (A)

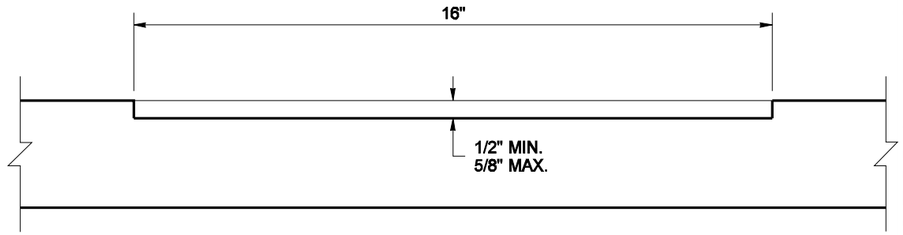

SECTION (B)

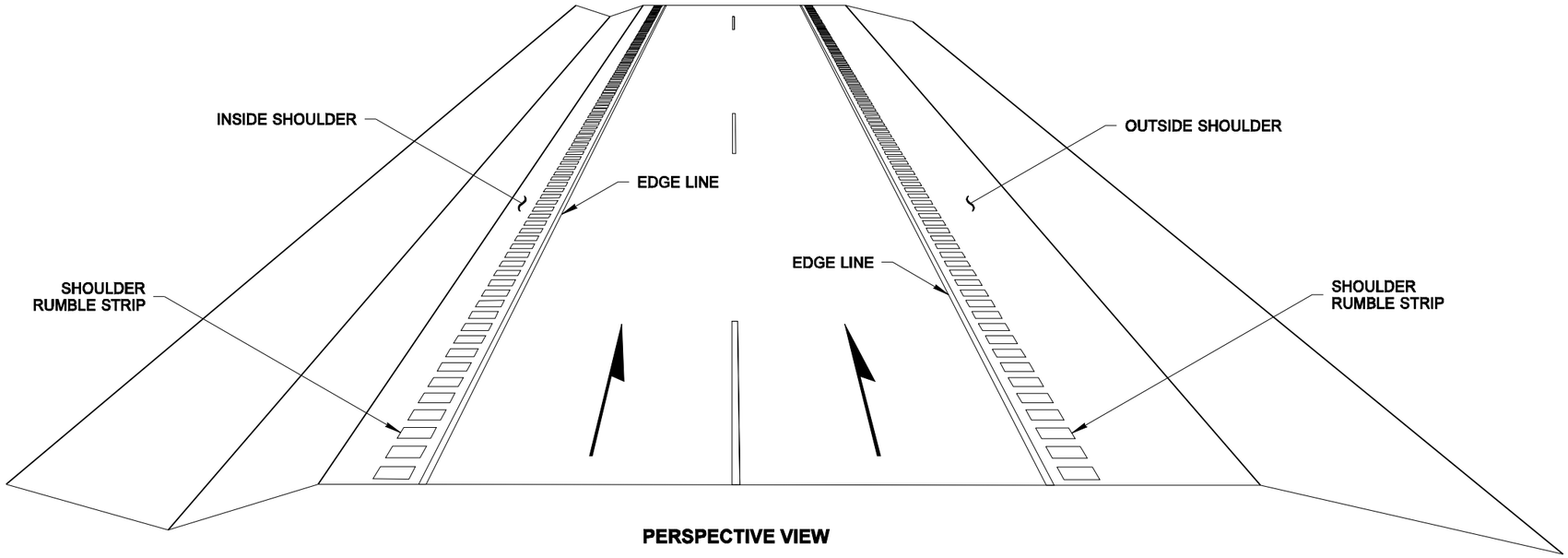

PERSPECTIVE VIEW

MULTI-LANE DIVIDED HIGHWAY

HAROLD J. PETERFESO
STATE OF WASHINGTON
21861
REGISTERED
PROFESSIONAL ENGINEER

EXPIRES MAY 16, 2005

NOTE: THIS PLAN IS NOT A LEGAL ENGINEERING DOCUMENT BUT AN ELECTRONIC DUPLICATE. THE ORIGINAL, SIGNED BY THE ENGINEER AND APPROVED FOR PUBLICATION, IS KEPT ON FILE AT THE WASHINGTON STATE DEPARTMENT OF TRANSPORTATION. A COPY MAY BE OBTAINED UPON REQUEST.

SHOULDER RUMBLE STRIP TYPE 1 FOR DIVIDED HIGHWAYS STANDARD PLAN H-4

SHEET 1 OF 4 SHEETS

APPROVED FOR PUBLICATION

Harold J. Peterfeso — STATE DESIGN ENGINEER — *08-18-04* — DATE

Washington State Department of Transportation

DATE	REVISION	BY
05/2004	ADDED SHEET 4, RUMBLE STRIP PLACEMENT AT INTERSECTIONS DETAIL	AMC

EFFECTIVE: APRIL 2, 2007 TO JANUARY 6, 2008

EFFECTIVE: APRIL 2, 2007 TO JANUARY 6, 2008

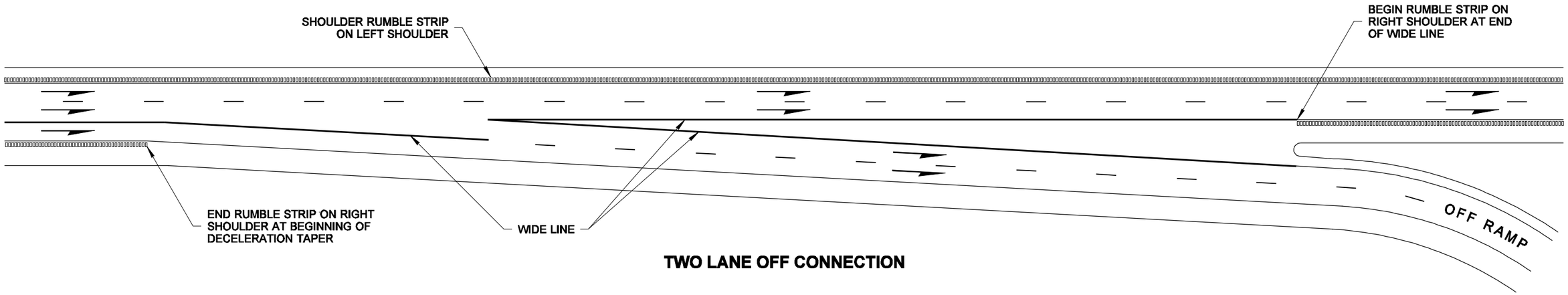

TWO LANE OFF CONNECTION

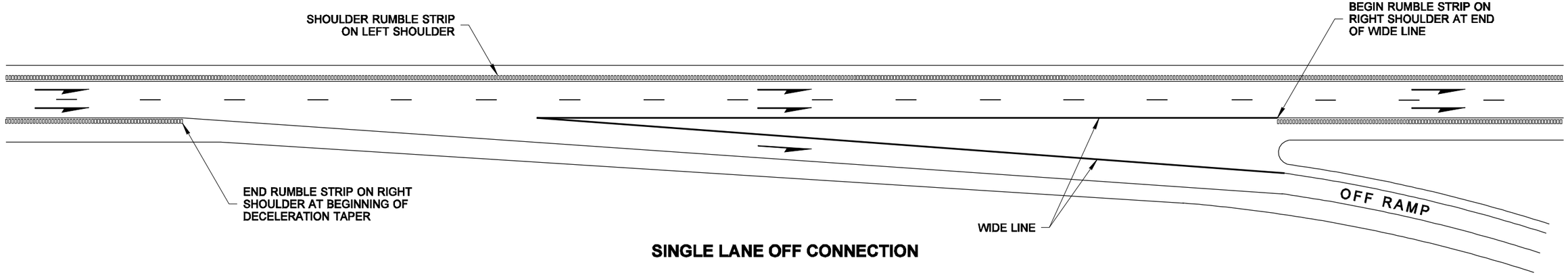

SINGLE LANE OFF CONNECTION

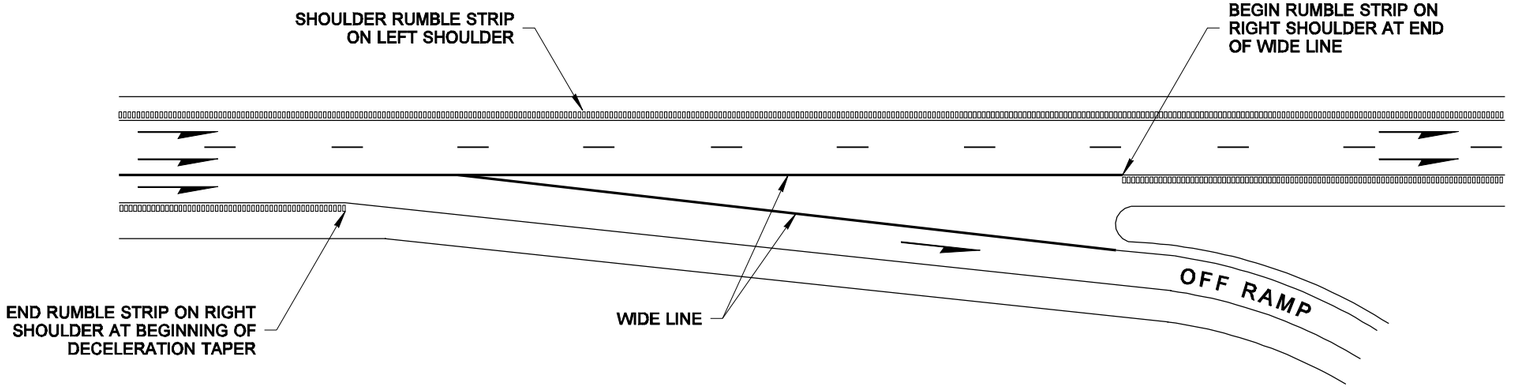

SINGLE LANE OFF CONNECTION
FOR ONE LANE REDUCTION

HAROLD J. PETERFESO
STATE OF WASHINGTON
21861
REGISTERED
PROFESSIONAL ENGINEER

EXPIRES MAY 16, 2005

NOTE: THIS PLAN IS NOT A LEGAL ENGINEERING DOCUMENT BUT AN ELECTRONIC DUPLICATE. THE ORIGINAL, SIGNED BY THE ENGINEER AND APPROVED FOR PUBLICATION, IS KEPT ON FILE AT THE WASHINGTON STATE DEPARTMENT OF TRANSPORTATION. A COPY MAY BE OBTAINED UPON REQUEST.

SHOULDER RUMBLE STRIP TYPE 1 FOR DIVIDED HIGHWAYS STANDARD PLAN H-4

SHEET 2 OF 4 SHEETS

APPROVED FOR PUBLICATION

Harold J. Peterfeso — STATE DESIGN ENGINEER — *08-18-04* — DATE

Washington State Department of Transportation

EFFECTIVE: APRIL 2, 2007 TO JANUARY 6, 2008

EFFECTIVE: APRIL 2, 2007 TO JANUARY 6, 2008
EFFECTIVE: APRIL 2, 2007 TO JANUARY 6, 2008

DRAWN BY: MARK SUJKA

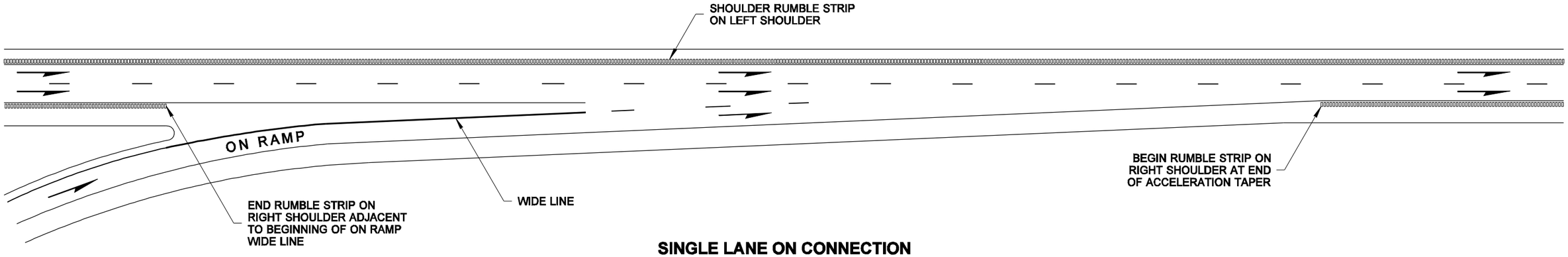

SINGLE LANE ON CONNECTION

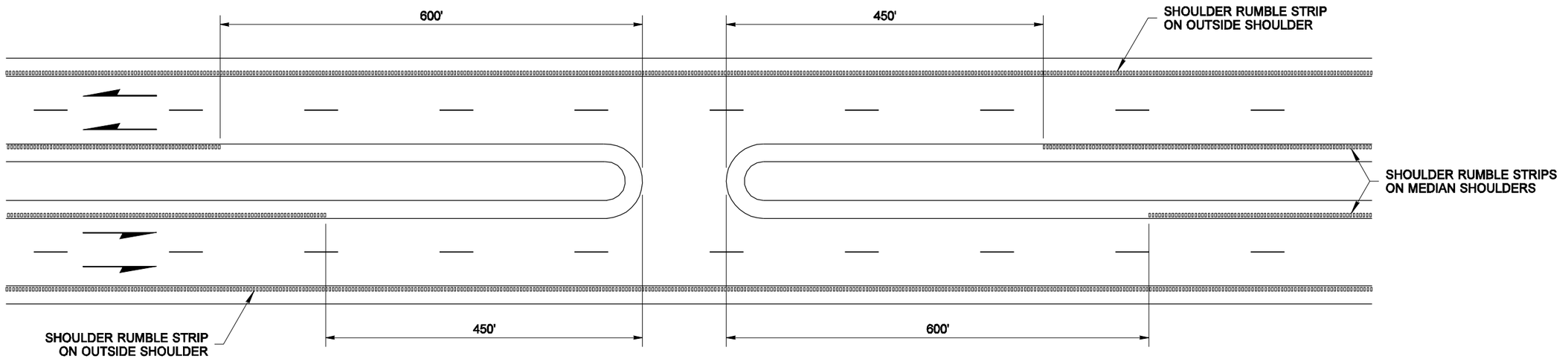

MEDIAN CROSSOVER

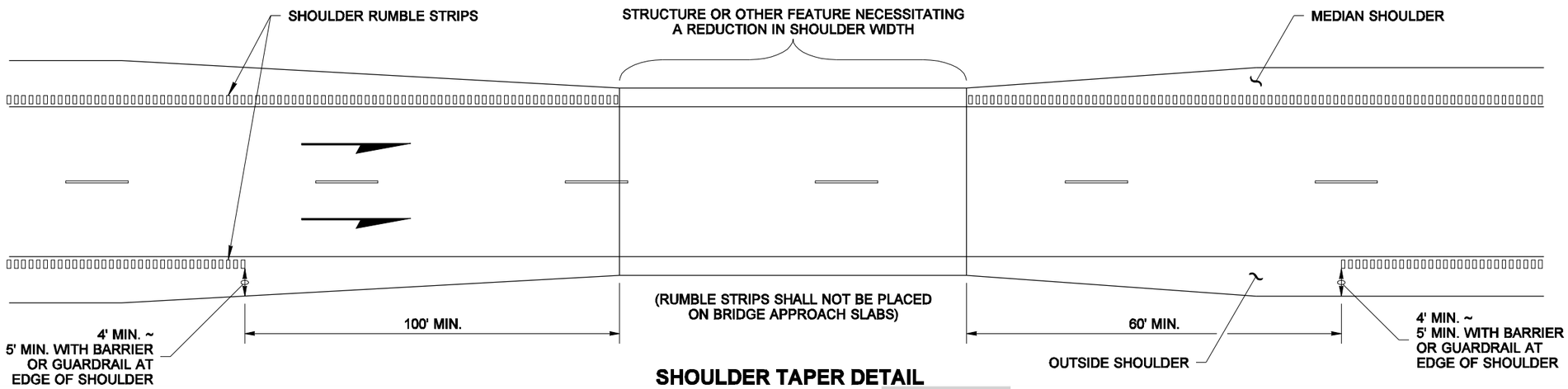

SHOULDER TAPER DETAIL

HAROLD J. PETERFESO
STATE OF WASHINGTON
21861
REGISTERED
PROFESSIONAL ENGINEER

EXPIRES MAY 16, 2005

NOTE: THIS PLAN IS NOT A LEGAL ENGINEERING DOCUMENT BUT AN ELECTRONIC DUPLICATE. THE ORIGINAL, SIGNED BY THE ENGINEER AND APPROVED FOR PUBLICATION, IS KEPT ON FILE AT THE WASHINGTON STATE DEPARTMENT OF TRANSPORTATION. A COPY MAY BE OBTAINED UPON REQUEST.

SHOULDER RUMBLE STRIP TYPE 1 FOR DIVIDED HIGHWAYS STANDARD PLAN H-4

SHEET 3 OF 4 SHEETS

APPROVED FOR PUBLICATION

Harold J. Peterfeso — STATE DESIGN ENGINEER — *08-18-04* — DATE

Washington State Department of Transportation

EFFECTIVE: APRIL 2, 2007 TO JANUARY 6, 2008
EFFECTIVE: APRIL 2, 2007 TO JANUARY 6, 2008
EFFECTIVE: APRIL 2, 2007 TO JANUARY 6, 2008
EFFECTIVE: APRIL 2, 2007 TO JANUARY 6, 2008

EFFECTIVE: APRIL 2, 2007 TO JANUARY 6, 2008

DRAWN BY: ADAM COCHRAN

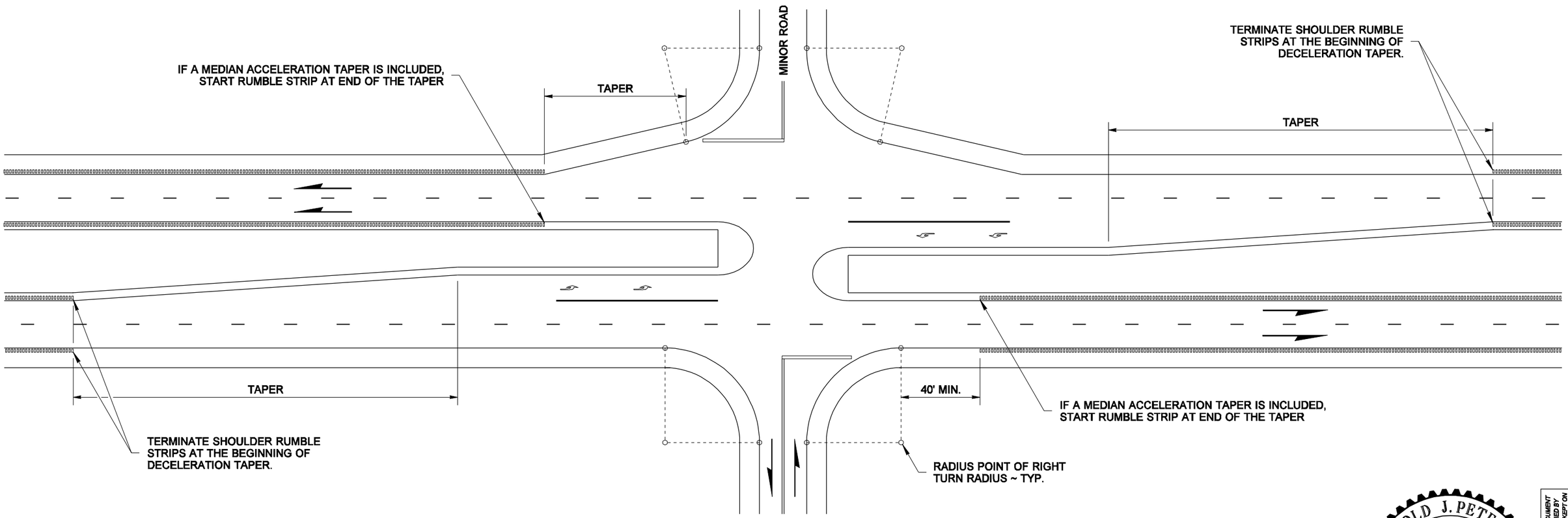

RUMBLE STRIP PLACEMENT AT INTERSECTIONS

HAROLD J. PETERFESO
STATE OF WASHINGTON
21861
REGISTERED
PROFESSIONAL ENGINEER

EXPIRES MAY 16, 2005

NOTE: THIS PLAN IS NOT A LEGAL ENGINEERING DOCUMENT BUT AN ELECTRONIC DUPLICATE. THE ORIGINAL, SIGNED BY THE ENGINEER AND APPROVED FOR PUBLICATION, IS KEPT ON FILE AT THE WASHINGTON STATE DEPARTMENT OF TRANSPORTATION. A COPY MAY BE OBTAINED UPON REQUEST.

SHOULDER RUMBLE STRIP TYPE 1 FOR DIVIDED HIGHWAYS STANDARD PLAN H-4

SHEET 4 OF 4 SHEETS

APPROVED FOR PUBLICATION

Harold J. Peterfeso — STATE DESIGN ENGINEER

08-18-04 — DATE

Washington State Department of Transportation

EFFECTIVE: APRIL 2, 2007 TO JANUARY 6, 2008

EFFECTIVE: APRIL 2, 2007 TO JANUARY 6, 2008

EFFECTIVE: APRIL 2, 2007 TO JANUARY 6, 2008

DRAWN BY: MARK SUJKA

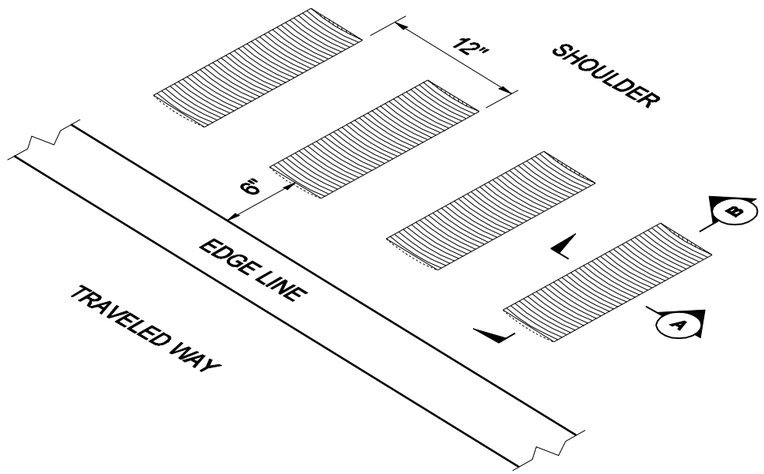

ISOMETRIC VIEW

TYPICAL SHOULDER INSTALLATION

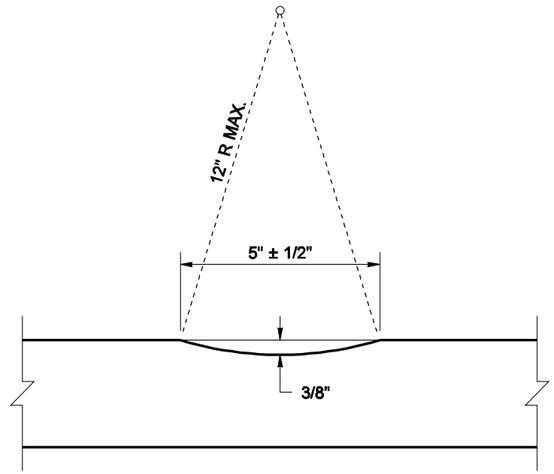

SECTION (A)

NOTE

Rumble strips are not installed in certain reduced-width shoulder locations. See the SHOULDER TAPER DETAIL on Standard Plan H-4.

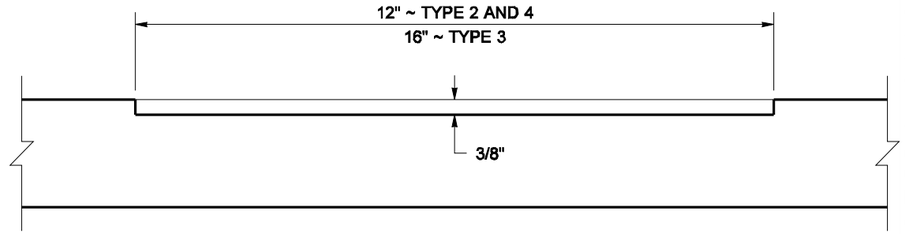

SECTION (B)

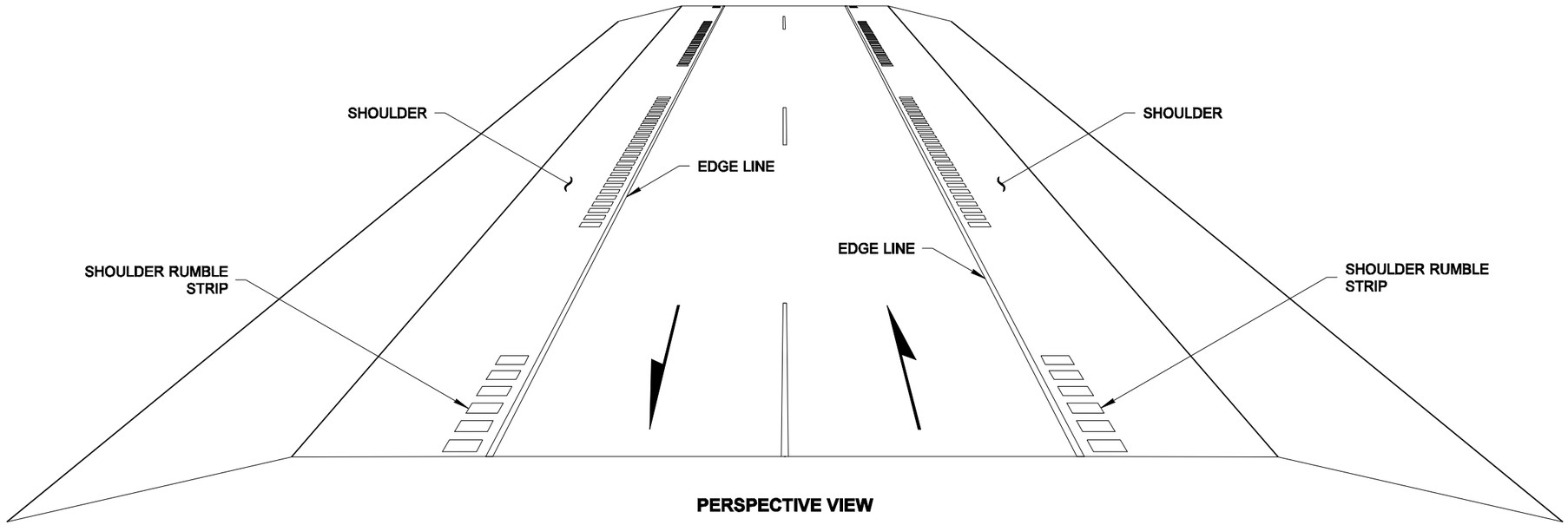

PERSPECTIVE VIEW

UNDIVIDED HIGHWAY
(TYPE 4 PATTERN SHOWN)

HAROLD J. PETERFESO
STATE OF WASHINGTON
21861
REGISTERED
PROFESSIONAL ENGINEER

EXPIRES MAY 16, 2005

NOTE: THIS PLAN IS NOT A LEGAL ENGINEERING DOCUMENT BUT AN ELECTRONIC DUPLICATE. THE ORIGINAL, SIGNED BY THE ENGINEER AND APPROVED FOR PUBLICATION, IS KEPT ON FILE AT THE WASHINGTON STATE DEPARTMENT OF TRANSPORTATION. A COPY MAY BE OBTAINED UPON REQUEST.

SHOULDER RUMBLE STRIP TYPES 2, 3, & 4 FOR UNDIVIDED HIGHWAYS STANDARD PLAN H-4a

SHEET 1 OF 2 SHEETS

APPROVED FOR PUBLICATION

Harold J. Peterfeso — STATE DESIGN ENGINEER — *02-25-05* — DATE

Washington State Department of Transportation

EFFECTIVE: APRIL 2, 2007 TO JANUARY 6, 2008

EFFECTIVE: APRIL 2, 2007 TO JANUARY 6, 2008

EFFECTIVE: APRIL 2, 2007 TO JANUARY 6, 2008

DRAWN BY: MARK SUJKA

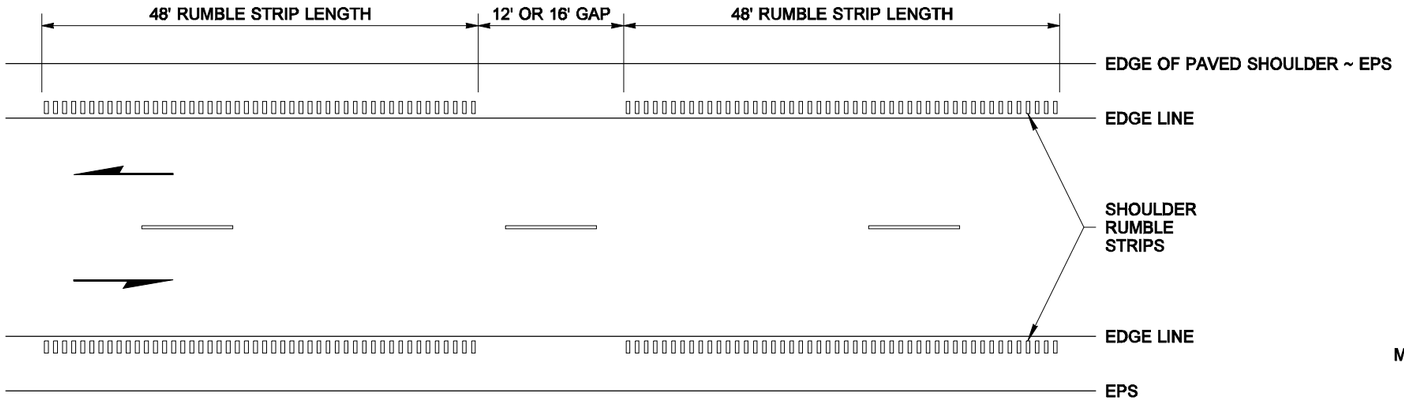

TYPE 2 ~ 12' GAP AND 12" WIDE STRIP
TYPE 3 ~ 16' GAP AND 16" WIDE STRIP

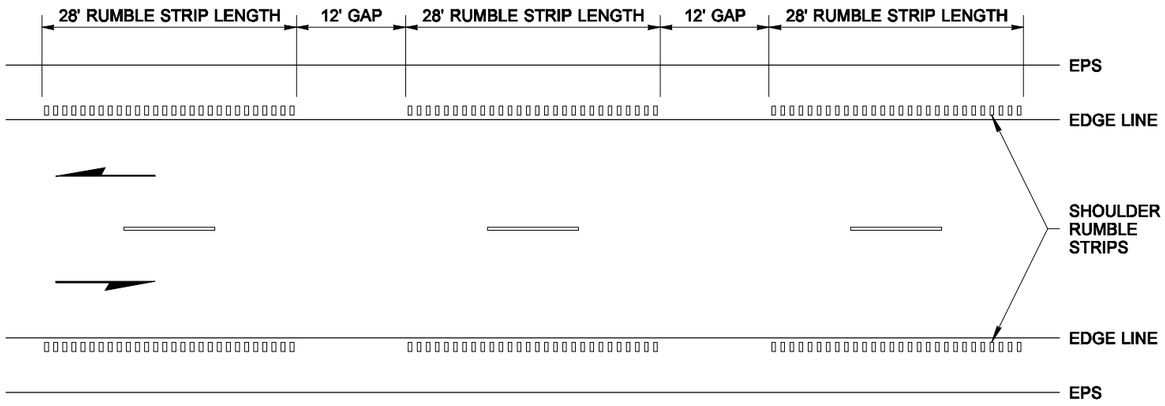

TYPE 4 ~ 12" WIDE STRIP

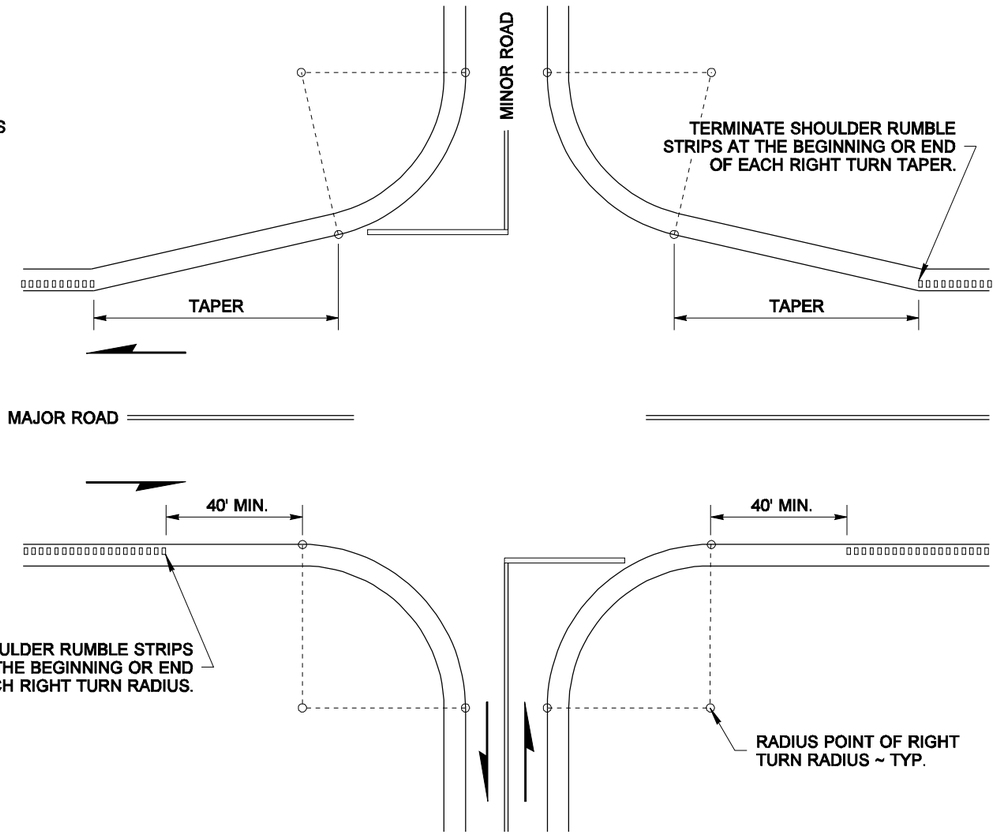

RUMBLE STRIP PLACEMENT AT INTERSECTIONS

HAROLD J. PETERFESO
STATE OF WASHINGTON
21861
REGISTERED
PROFESSIONAL ENGINEER

EXPIRES MAY 16, 2005

NOTE: THIS PLAN IS NOT A LEGAL ENGINEERING DOCUMENT BUT AN ELECTRONIC DUPLICATE. THE ORIGINAL, SIGNED BY THE ENGINEER AND APPROVED FOR PUBLICATION, IS KEPT ON FILE AT THE WASHINGTON STATE DEPARTMENT OF TRANSPORTATION. A COPY MAY BE OBTAINED UPON REQUEST.

SHOULDER RUMBLE STRIP TYPES 2, 3, & 4 FOR UNDIVIDED HIGHWAYS STANDARD PLAN H-4a

SHEET 2 OF 2 SHEETS

APPROVED FOR PUBLICATION

Harold J. Peterfeso — STATE DESIGN ENGINEER
02-25-05 — DATE

Washington State Department of Transportation

EFFECTIVE: APRIL 2, 2007 TO JANUARY 6, 2008

EFFECTIVE: APRIL 2, 2007 TO JANUARY 6, 2008

EFFECTIVE: APRIL 2, 2007 TO JANUARY 6, 2008

DRAWN BY: BILL BERENS

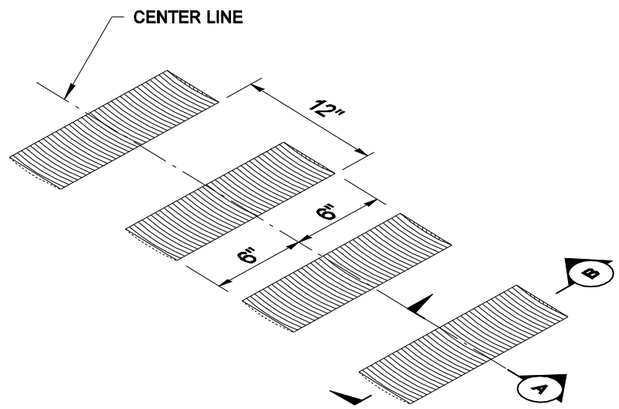

ISOMETRIC VIEW

TYPICAL INSTALLATION

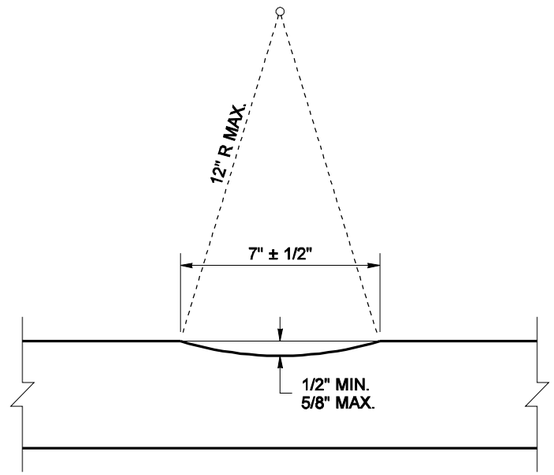

SECTION (A)

NOTES

1. Center Line Rumble Strip installation requires a minimum distance of 12 feet from Center Line to edge of paved shoulder.
2. When directed by the Engineer, Rumble Strips may be installed along the turn pocket taper where there is a history of rear-end collisions in the turn pocket.

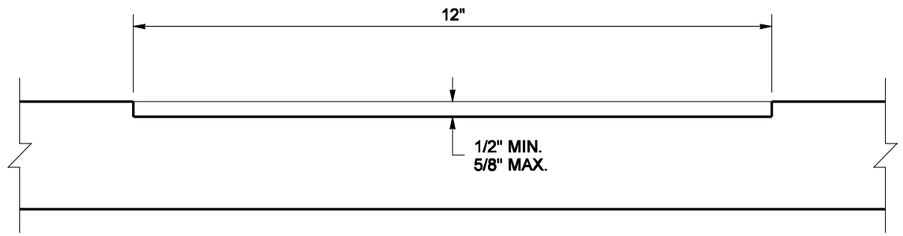

SECTION (B)

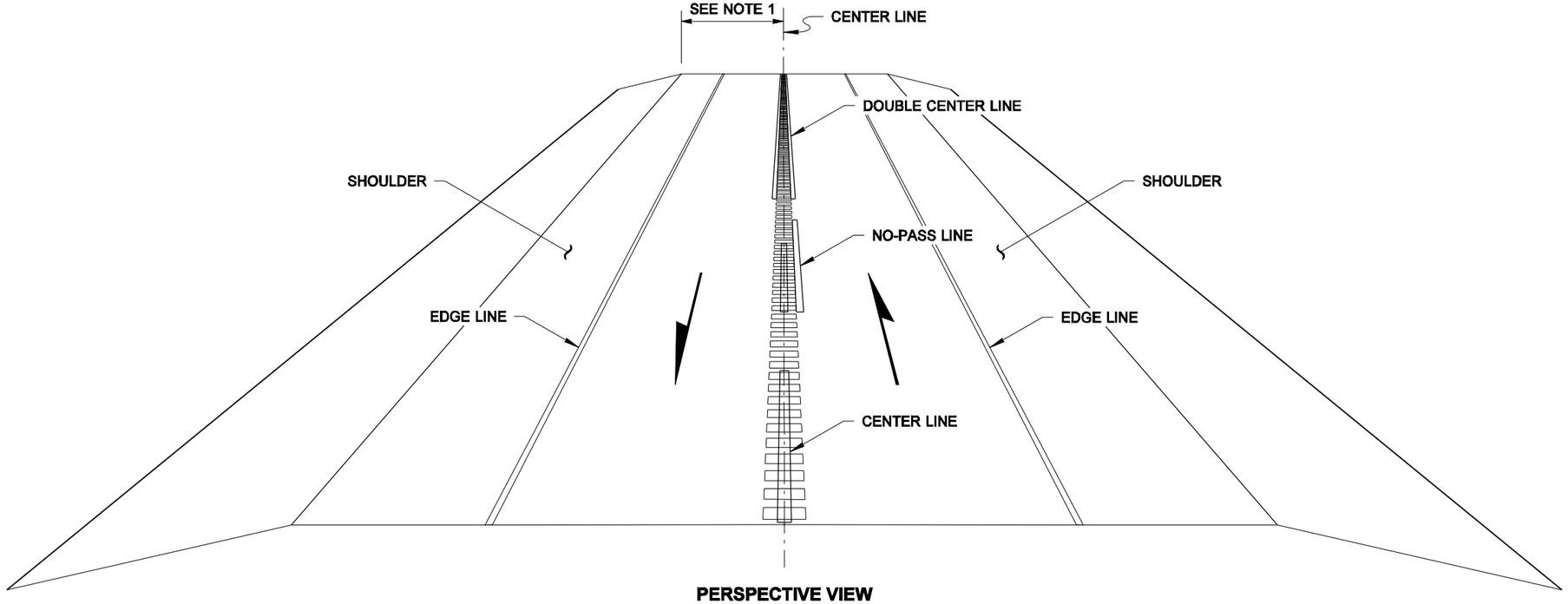

PERSPECTIVE VIEW

UNDIVIDED HIGHWAY

HAROLD J. PETERFESO
STATE OF WASHINGTON
21861
REGISTERED
PROFESSIONAL ENGINEER

EXPIRES MAY 16, 2007

NOTE: THIS PLAN IS NOT A LEGAL ENGINEERING DOCUMENT BUT AN ELECTRONIC DUPLICATE. THE ORIGINAL, SIGNED BY THE ENGINEER AND APPROVED FOR PUBLICATION, IS KEPT ON FILE AT THE WASHINGTON STATE DEPARTMENT OF TRANSPORTATION. A COPY MAY BE OBTAINED UPON REQUEST.

CENTER LINE RUMBLE STRIP

STANDARD PLAN H-4b

SHEET 1 OF 2 SHEETS

APPROVED FOR PUBLICATION

Harold J. Peterfeso — STATE DESIGN ENGINEER

10-24-06 — DATE

Washington State Department of Transportation

EFFECTIVE: APRIL 2, 2007 TO JANUARY 6, 2008

EFFECTIVE: APRIL 2, 2007 TO JANUARY 6, 2008

EFFECTIVE: APRIL 2, 2007 TO JANUARY 6, 2008

DRAWN BY: BILL BERENS

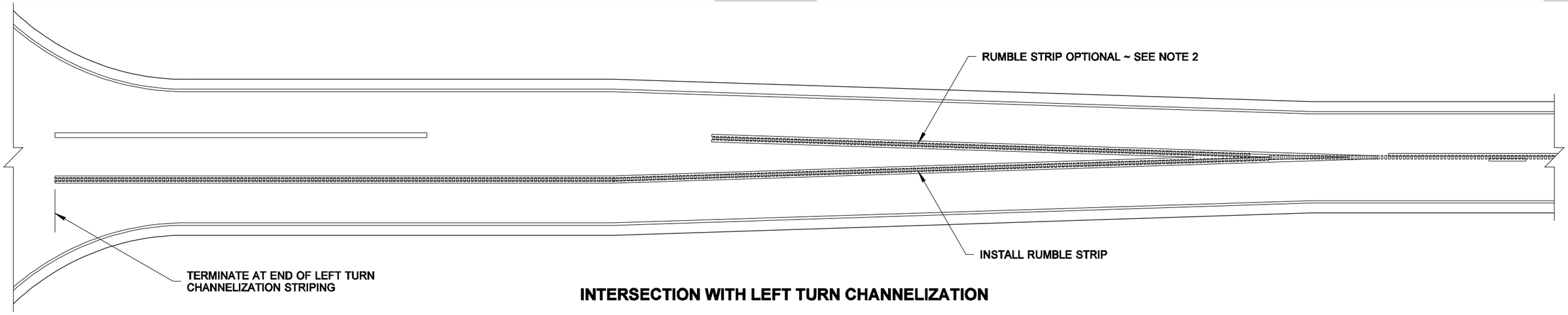

INTERSECTION WITH LEFT TURN CHANNELIZATION

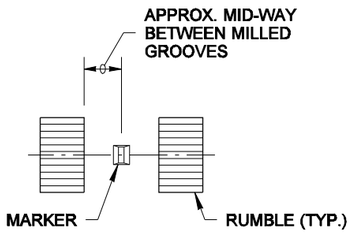

RAISED PAVEMENT MARKER
WHEN SPECIFIED IN CONTRACT

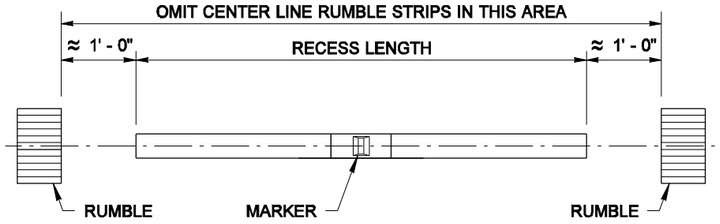

REFER TO STANDARD PLAN M-20.30 FOR RECESSED PAVEMENT MARKER DETAIL

RECESSED PAVEMENT MARKER
WHEN SPECIFIED IN CONTRACT

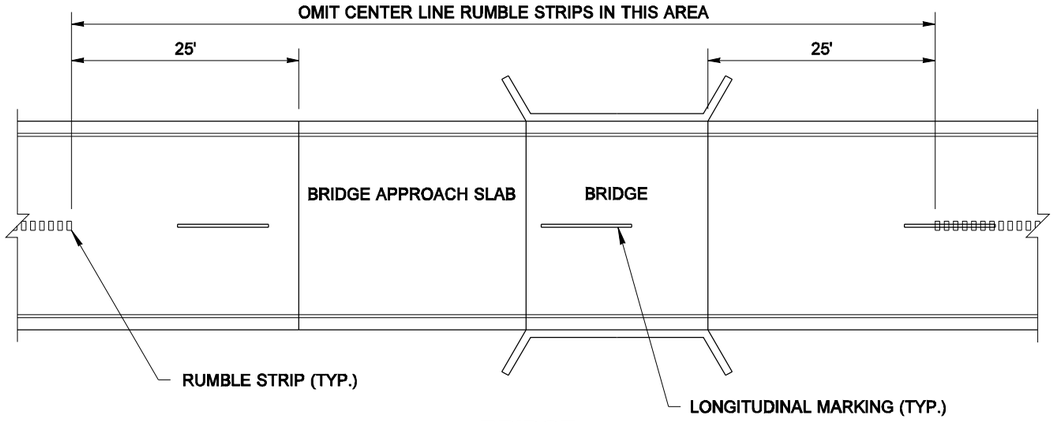

BRIDGE

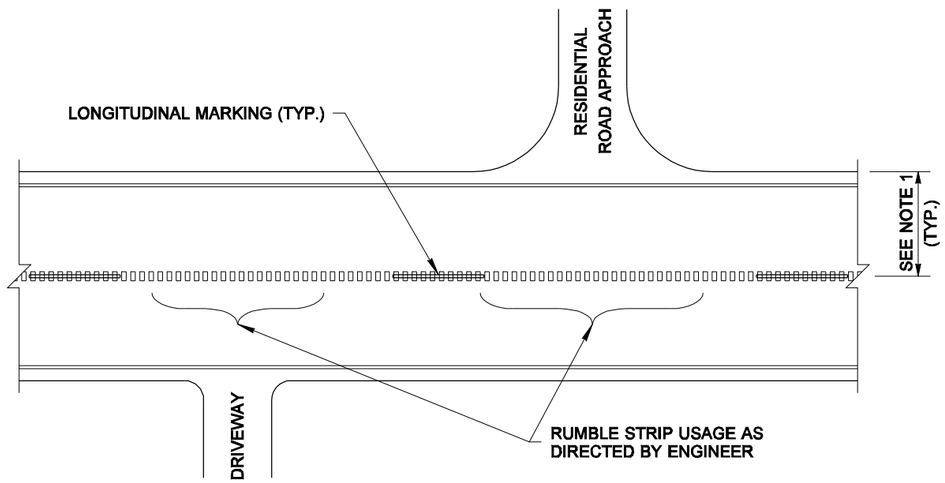

NON-COMMERCIAL ROAD APPROACHES AND DRIVEWAYS

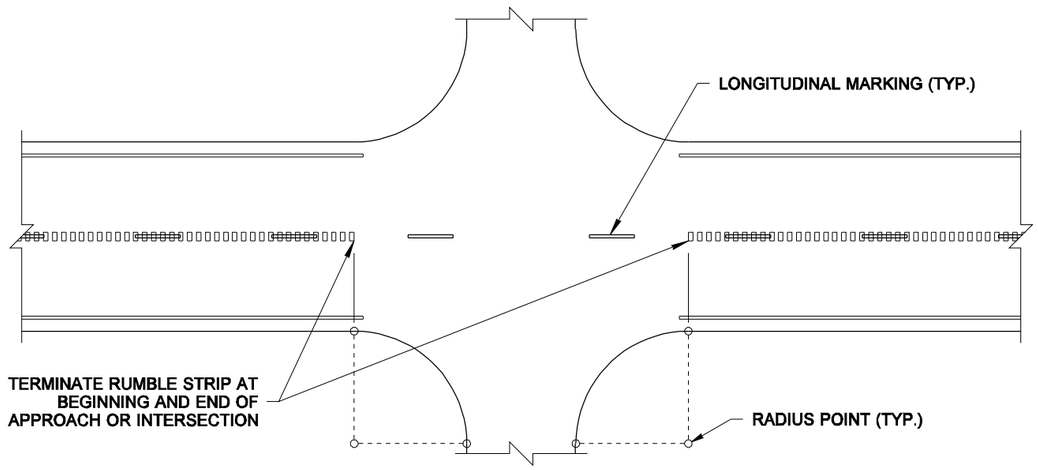

UNCHANNELIZED INTERSECTIONS AND COMMERCIAL ROAD APPROACHES

HAROLD J. PETERFESO
STATE OF WASHINGTON
21861
REGISTERED
PROFESSIONAL ENGINEER

EXPIRES MAY 16, 2007

NOTE: THIS PLAN IS NOT A LEGAL ENGINEERING DOCUMENT BUT AN ELECTRONIC DUPLICATE. THE ORIGINAL, SIGNED BY THE ENGINEER AND APPROVED FOR PUBLICATION, IS KEPT ON FILE AT THE WASHINGTON STATE DEPARTMENT OF TRANSPORTATION. A COPY MAY BE OBTAINED UPON REQUEST.

CENTER LINE RUMBLE STRIP

STANDARD PLAN H-4b

SHEET 2 OF 2 SHEETS

APPROVED FOR PUBLICATION

Harold J. Peterfeso — STATE DESIGN ENGINEER — *10-24-06* — DATE

Washington State Department of Transportation

EFFECTIVE: APRIL 2, 2007 TO JANUARY 6, 2008

EFFECTIVE: APRIL 2, 2007 TO JANUARY 6, 2008

DRAWN BY: MARK SUJKA

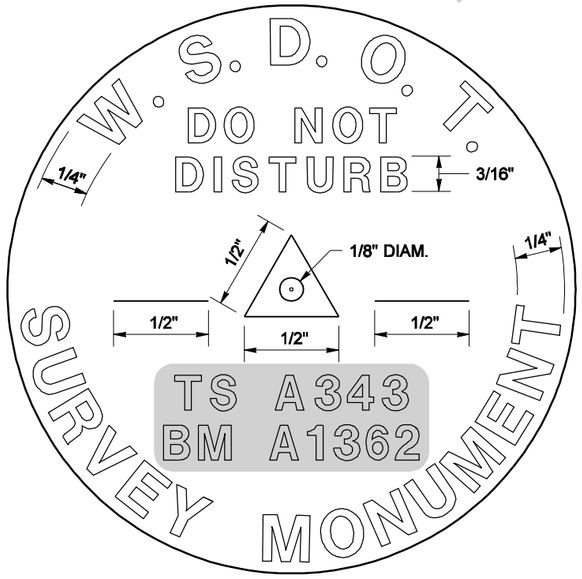

TYPE 1

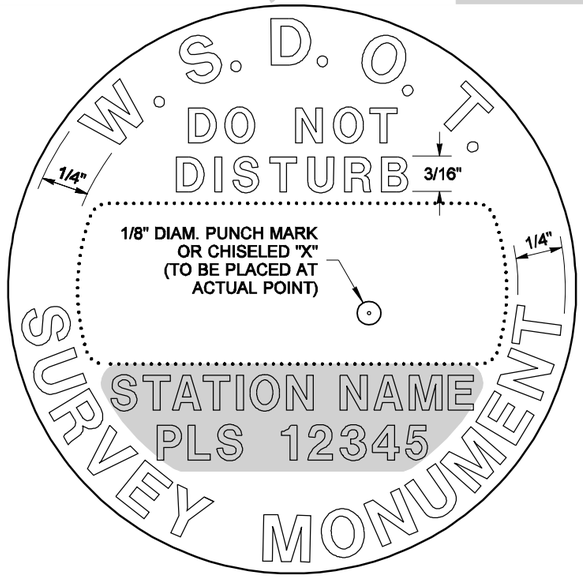

TYPE 2

TOP VIEW

BRASS DISC

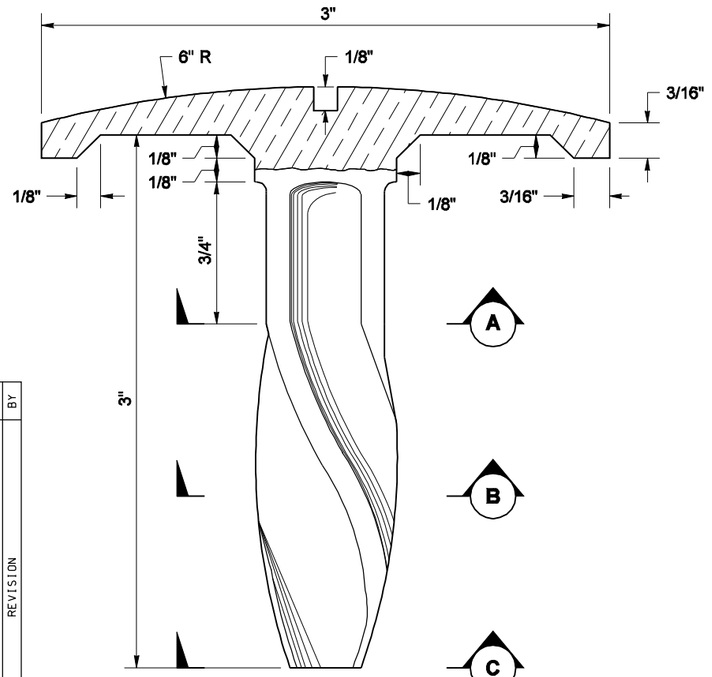

SIDE VIEW

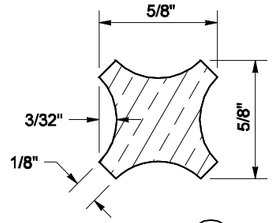

SECTION (A)

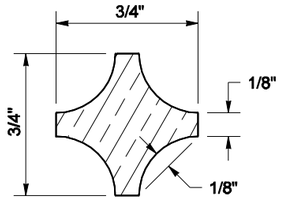

SECTION (B)

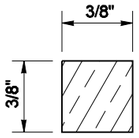

SECTION (C)

BY	REVISION	DATE
MAS	ADDED TYPE 2 MONUMENT	10/2003

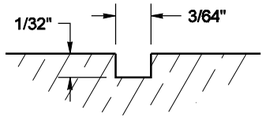

SECTION OF GROOVE FOR 1/4" LETTERS

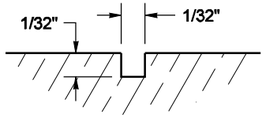

SECTION OF GROOVE FOR 3/16" LETTERS

NOTES

1. THE BRASS DISC WILL BE FURNISHED BY THE STATE.
2. THE TEXT IN THE SHADED AREA (SEE "TOP VIEW") SHALL BE 3/16" HIGH AND WILL BE STAMPED BY WSDOT PERSONNEL PRIOR TO SETTING THE CAP. ONLY THE ASSIGNED IDENTIFICATION LETTERS AND NUMBERS ARE TO BE PLACED ON THE BRASS DISC.
3. THE HOLE SHALL BE 32" MINIMUM IN DEPTH OR 6" BELOW THE DEEPEST RECORDED FROST LINE. ALL LOOSE MATERIAL SHALL BE REMOVED FROM THE BOTTOM OF THE HOLE SO THAT THE CONCRETE IS PLACED ON FIRM UNDISTURBED EARTH.
4. THE TOP OF THE CONCRETE SHALL BE TROWELED SMOOTH AND THE BRASS DISC SET IN THE CENTER WITH TOP FLUSH AND LEVEL. WHEN THE CONCRETE IS SET, COVER THE ENTIRE MONUMENT WITH MOIST EARTH AND LEAVE FOR THREE DAYS.
5. THE TOP OF THE MONUMENT MAY BE RECESSED OR PROTRUDING, DEPENDING ON CONDITIONS.
6. TO REPLACE A GENERAL LAND OFFICE (GLO) CORNER, CONSULT A LICENSED PROFESSIONAL LAND SURVEYOR (PLS).

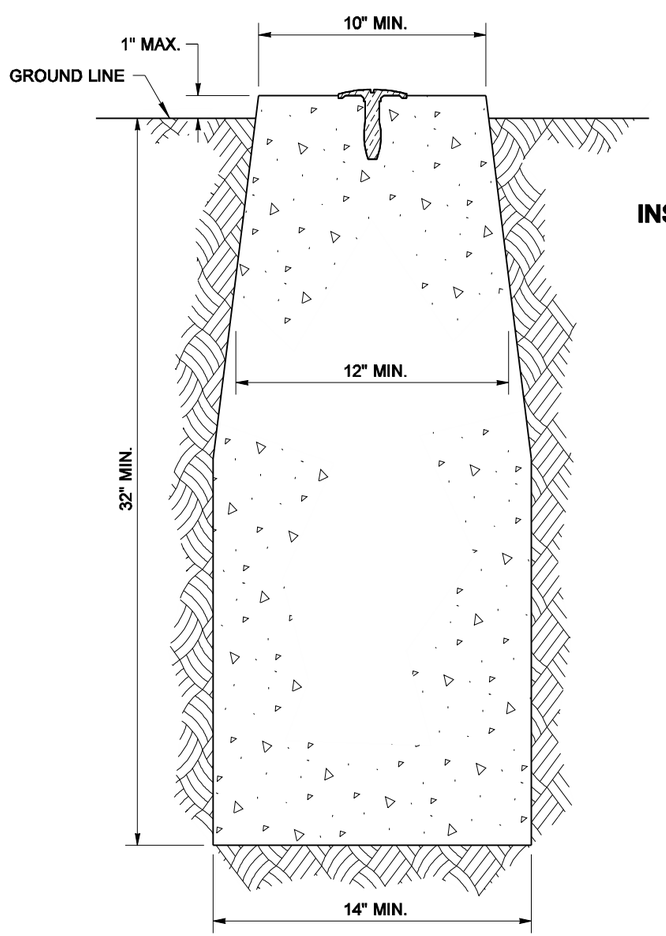

SECTION VIEW OF GENERAL INSTALLATION

INSTALLATION

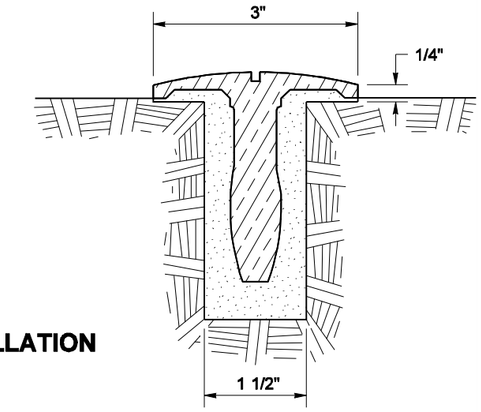

SECTION VIEW OF LEDGE ROCK, CONCRETE OR ASPHALT INSTALLATION



EXPIRES MAY 16, 2005

NOTE: THIS PLAN IS NOT A LEGAL ENGINEERING DOCUMENT BUT AN ELECTRONIC DUPLICATE. THE ORIGINAL, SIGNED BY THE ENGINEER AND APPROVED FOR PUBLICATION, IS KEPT ON FILE AT THE WASHINGTON STATE DEPARTMENT OF TRANSPORTATION. A COPY MAY BE OBTAINED UPON REQUEST.

SURVEY MONUMENTS TYPE 1 AND TYPE 2

STANDARD PLAN H-6

SHEET 1 OF 1 SHEET

APPROVED FOR PUBLICATION

Harold J. Peterfeso — STATE DESIGN ENGINEER — *10-29-03* — DATE

Washington State Department of Transportation

EFFECTIVE: APRIL 2, 2007 TO JANUARY 6, 2008

EFFECTIVE: APRIL 2, 2007 TO JANUARY 6, 2008
EFFECTIVE: APRIL 2, 2007 TO JANUARY 6, 2008

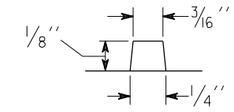

SECTION OF LETTER

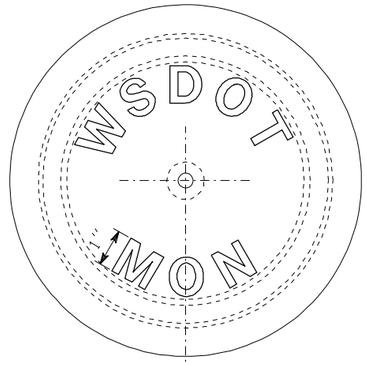

MONUMENT COVER

APPROXIMATE WEIGHTS	
Case	60 lbs
Cover	19 lbs
Total	79 lbs

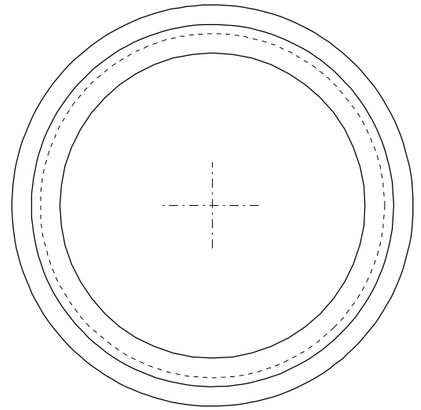

PLAN

RISER RING

RISER RING DIMENSIONS			
A (SIZE)	1 1/2"	2"	3"

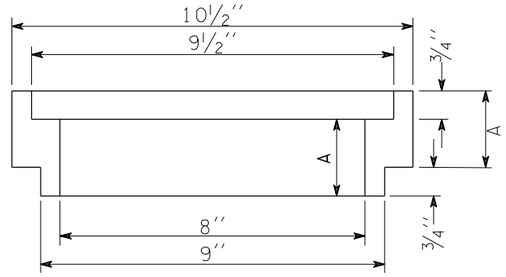

SECTION

RISER RING

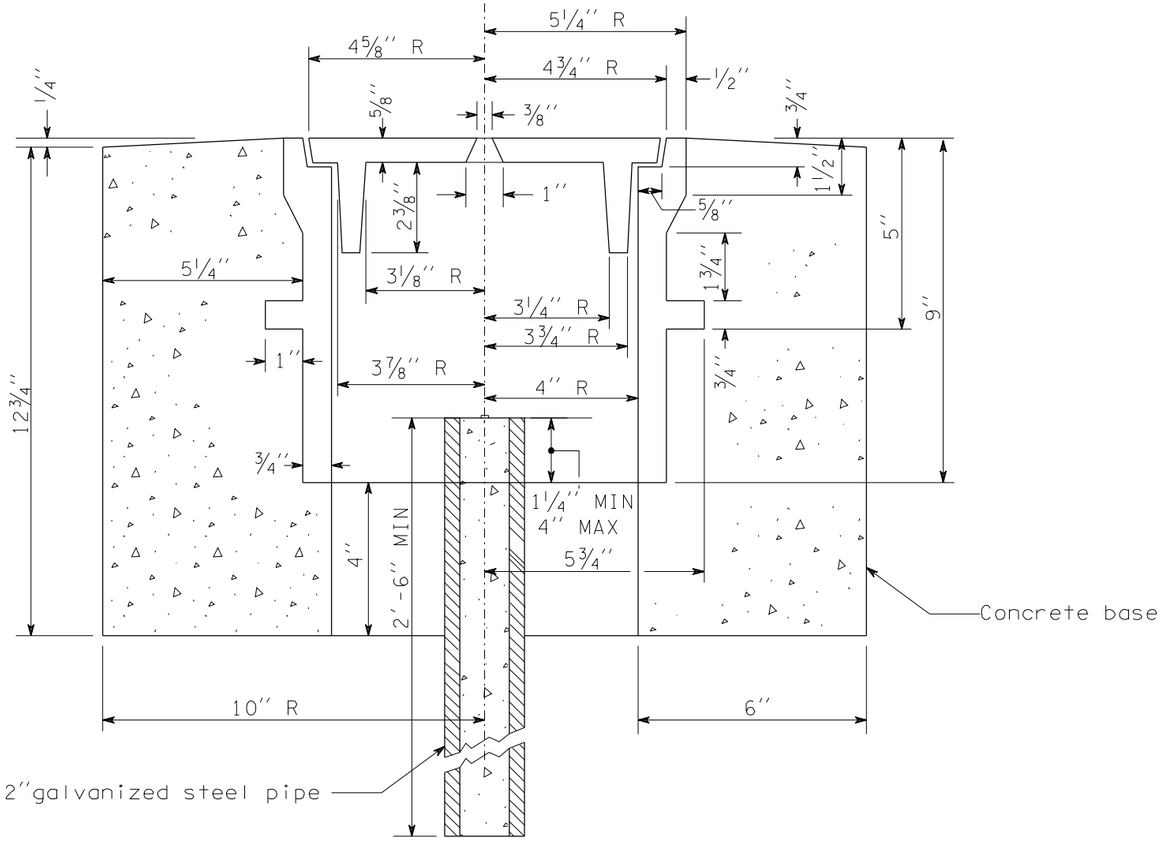

ASSEMBLY SECTION

CLIFFORD E. MANSFIELD
STATE OF WASHINGTON
15224
REGISTERED
PROFESSIONAL ENGINEER

EXPIRES MAY 3, 2000

NOTE: THIS PLAN IS NOT A LEGAL ENGINEERING DOCUMENT BUT AN ELECTRONIC DUPLICATE. THE ORIGINAL, SIGNED BY THE ENGINEER AND APPROVED FOR PUBLICATION, IS KEPT ON FILE AT THE WASHINGTON STATE DEPARTMENT OF TRANSPORTATION. A COPY MAY BE OBTAINED UPON REQUEST.

MONUMENT CASE AND COVER STANDARD PLAN H-7

APPROVED FOR PUBLICATION

Clifford E. Mansfield — DEPUTY STATE DESIGN ENGINEER

08-10-98 — DATE

WASHINGTON STATE DEPARTMENT OF TRANSPORTATION
OLYMPIA, WASHINGTON

EFFECTIVE: APRIL 2, 2007 TO JANUARY 6, 2008
EFFECTIVE: APRIL 2, 2007 TO JANUARY 6, 2008
EFFECTIVE: APRIL 2, 2007 TO JANUARY 6, 2008
EFFECTIVE: APRIL 2, 2007 TO JANUARY 6, 2008

EFFECTIVE: APRIL 2, 2007 TO JANUARY 6, 2008

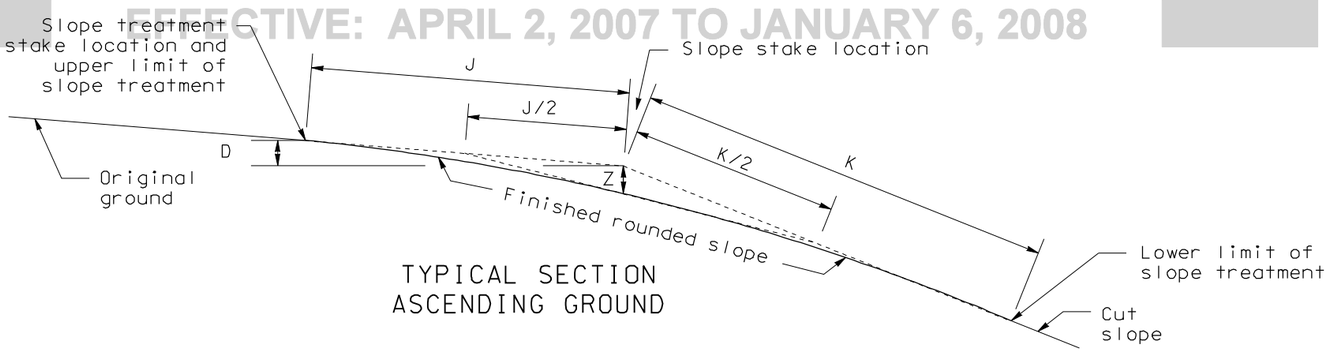

TYPICAL SECTION
ASCENDING GROUND

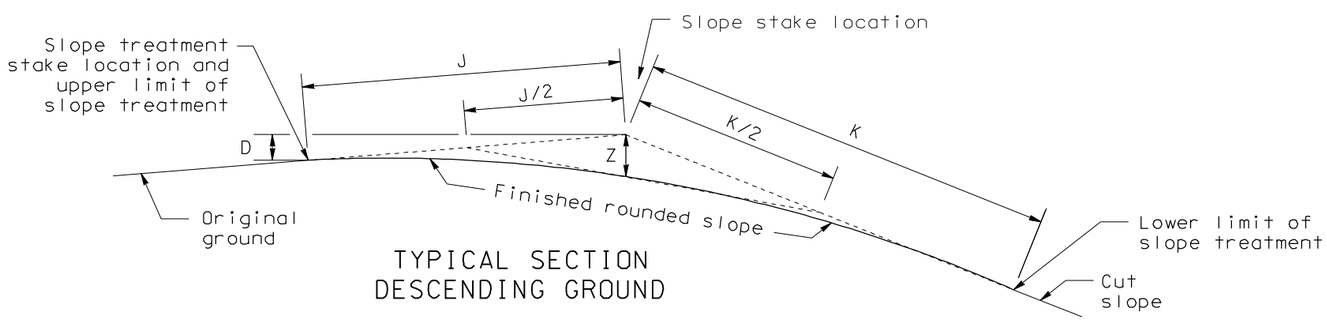

TYPICAL SECTION
DESCENDING GROUND

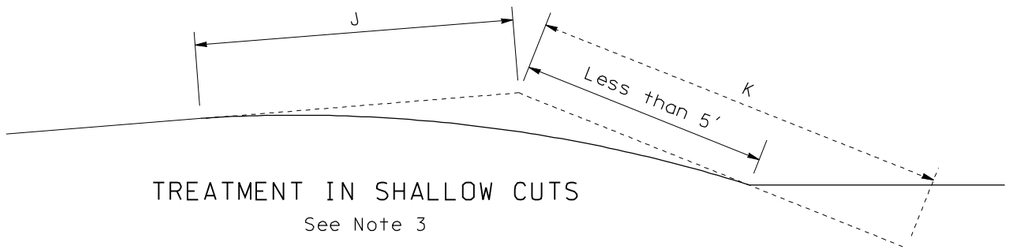

TREATMENT IN SHALLOW CUTS
See Note 3

VALUES OF Z (feet)
For Class A Slope Treatment

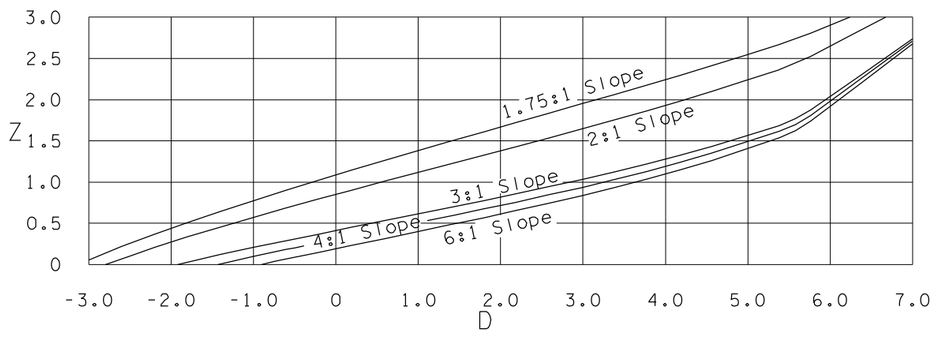

$$Z = \frac{\frac{K}{2}\sqrt{\left(\frac{J}{2}\right)^2 - \left(\frac{D}{2}\right)^2} \pm \left(\frac{DKS}{4}\right)}{\frac{KS}{2} + \left(\sqrt{1+S^2}\right)\left(\sqrt{\left(\frac{J}{2}\right)^2 - \left(\frac{D}{2}\right)^2}\right)}$$

In this equation the term $\pm DKS/4$ is positive when the slope treatment stake is lower than the slope stake (descending ground); and negative when the slope treatment stake is higher than the slope stake (ascending ground).

EFFECTIVE: APRIL 2, 2007 TO JANUARY 6, 2008

NOTES

1. Slope treatment shall be constructed simultaneously with the roadway excavation. Ordinarily hand trimming will not be required if satisfactory results are obtained with mechanical equipment.

2. It is essential that the construction of cut and fill slopes and the application of slope treatment fit as naturally as possible into the existing landscape to provide an aesthetically and geometrically satisfactory completed roadway.

3. When the distance K is greater than the distance from the top of cut to the bottom of ditch, slope treatment shall begin at bottom of ditch.

LEGEND:

J Distance from slope stake to slope treatment stake, measured on natural ground slope.

K Distance from slope stake to lower limit of slope treatment, measured down face of cut slope.

H Difference in elevation between finished shoulder grade and slope stake.

D Difference in elevation between slope stake and slope treatment stake.

Z Depth of slope treatment at slope stake as determined by a straight line between the midpoints of J and K.

S Horizontal distance per foot cut for the slope under consideration. (For a 3:1 slope, S=3)

CUT SLOPE	Class A		Class B
	J	K	J and K
4:1	7′	5′	5′
3:1	7′	5′	5′
2:1	7′	9′	5′
1.75:1	7′	12′	5′

DENNIS C. JACKSON
STATE OF WASHINGTON
14061
REGISTERED
PROFESSIONAL ENGINEER

EXPIRES NOVEMBER 8, 1998

NOTE: THIS PLAN IS NOT A LEGAL ENGINEERING DOCUMENT BUT AN ELECTRONIC DUPLICATE. THE ORIGINAL, SIGNED BY THE APPROVING ENGINEER, IS ARCHIVED IN THE DEPARTMENT'S RECORDS FILE AT THE WASHINGTON STATE DEPARTMENT OF TRANSPORTATION. A COPY MAY BE OBTAINED UPON REQUEST.

SLOPE TREATMENT

STANDARD PLAN H-8

APPROVED FOR PUBLICATION

Clifford E. Mansfield — DEPUTY STATE DESIGN ENGINEER

09/18/98 — DATE

WASHINGTON STATE DEPARTMENT OF TRANSPORTATION
OLYMPIA, WASHINGTON

EFFECTIVE: APRIL 2, 2007 TO JANUARY 6, 2008

EFFECTIVE: APRIL 2, 2007 TO JANUARY 6, 2008

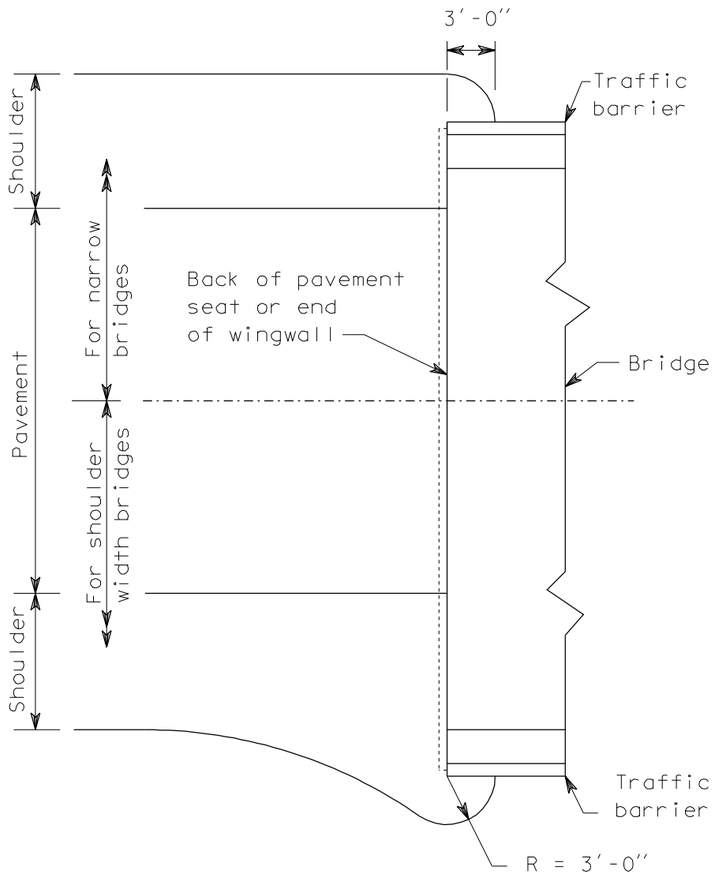

PLAN AT BRIDGE END

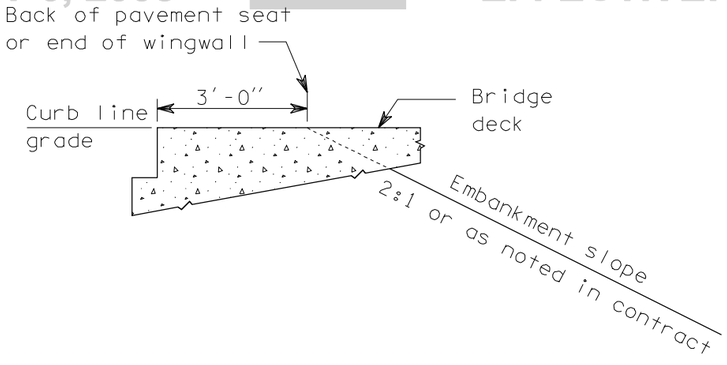

GENERAL SECTION AT BRIDGE END

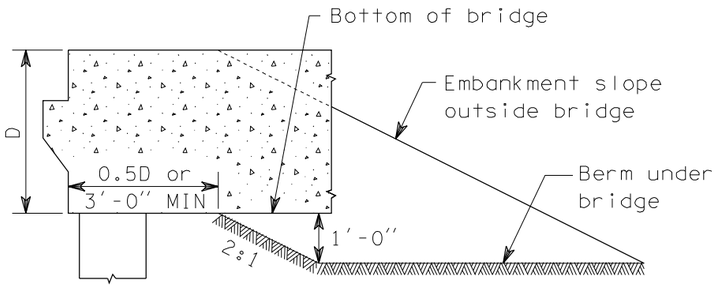

BRIDGE ON COLUMNS OR PILES

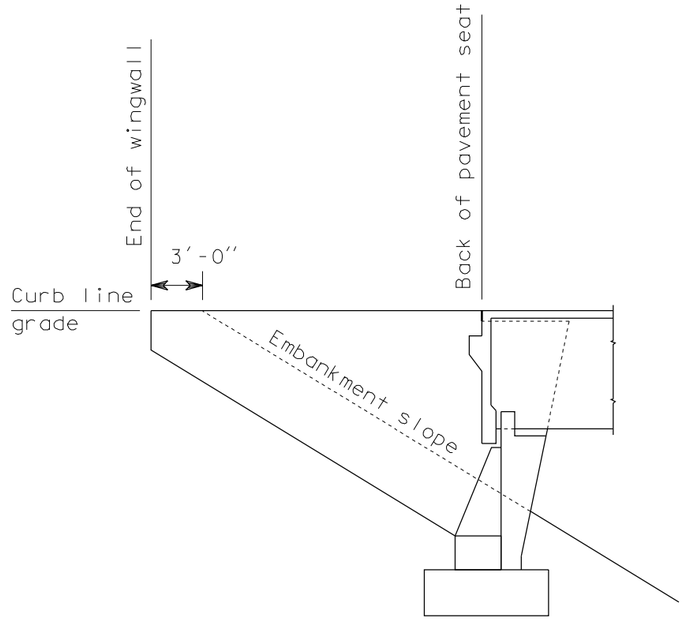

BRIDGE WITH WING WALLS

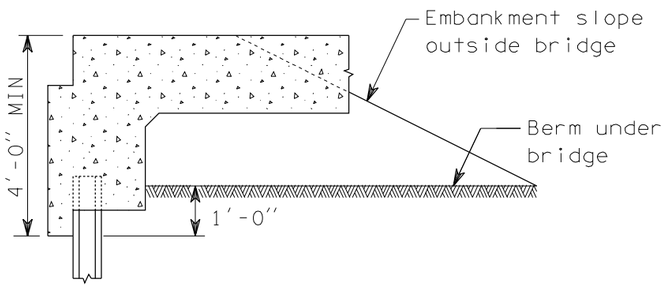

FLAT SLAB BRIDGE

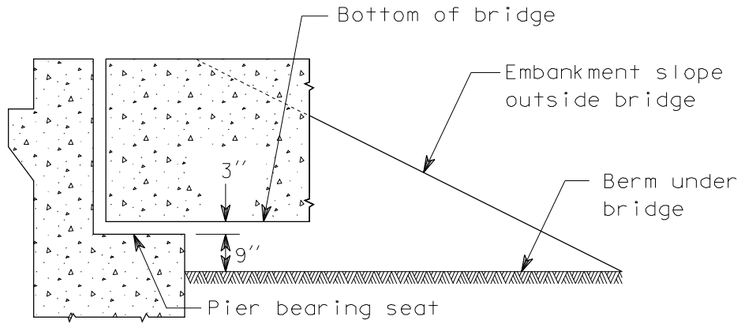

BRIDGE ON BEARINGS

EMBANKMENT AT BRIDGE ENDS

CLIFFORD E. MANSFIELD
STATE OF WASHINGTON
15224
REGISTERED
PROFESSIONAL ENGINEER
EXPIRES MAY 3, 1998

NOTE: THIS PLAN IS NOT A LEGAL ENGINEERING DOCUMENT UNLESS SIGNED AND APPROVED FOR PUBLICATION. IS KEPT ON FILE AT THE WASHINGTON STATE DEPARTMENT OF TRANSPORTATION. A COPY MAY BE OBTAINED UPON REQUEST.

STANDARD PLAN H-9

APPROVED FOR PUBLICATION

Donald K. Nelson — STATE DESIGN ENGINEER

04/18/97 — DATE

WASHINGTON STATE DEPARTMENT OF TRANSPORTATION
OLYMPIA, WASHINGTON

EFFECTIVE: APRIL 2, 2007 TO JANUARY 6, 2008

EFFECTIVE: APRIL 2, 2007 TO JANUARY 6, 2008

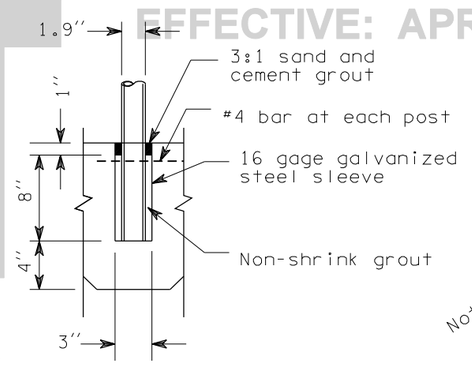

POST BASE DETAIL

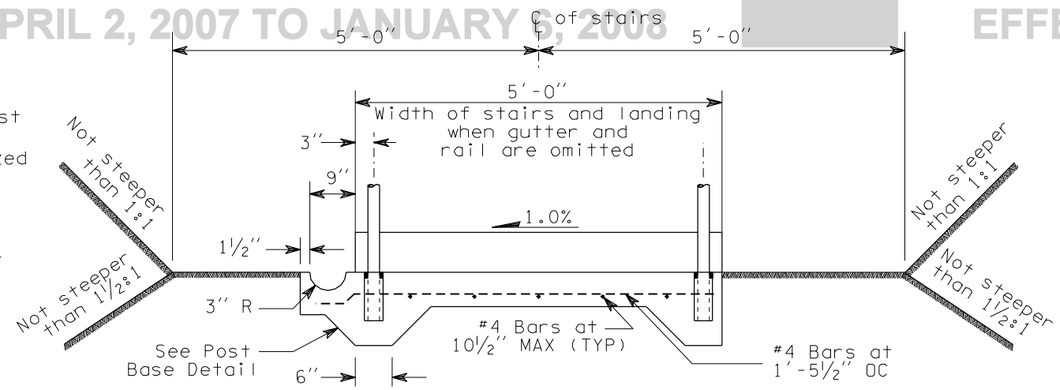

SLAB AND GRADING SECTION

NOTES

1. Manufacturer shall submit shop drawings of pipe railing for review Design shall be in accordance with AASHTO specifications.
2. Aluminum pipe railing shall have no external surface welds.

#4 BAR AT EACH POST

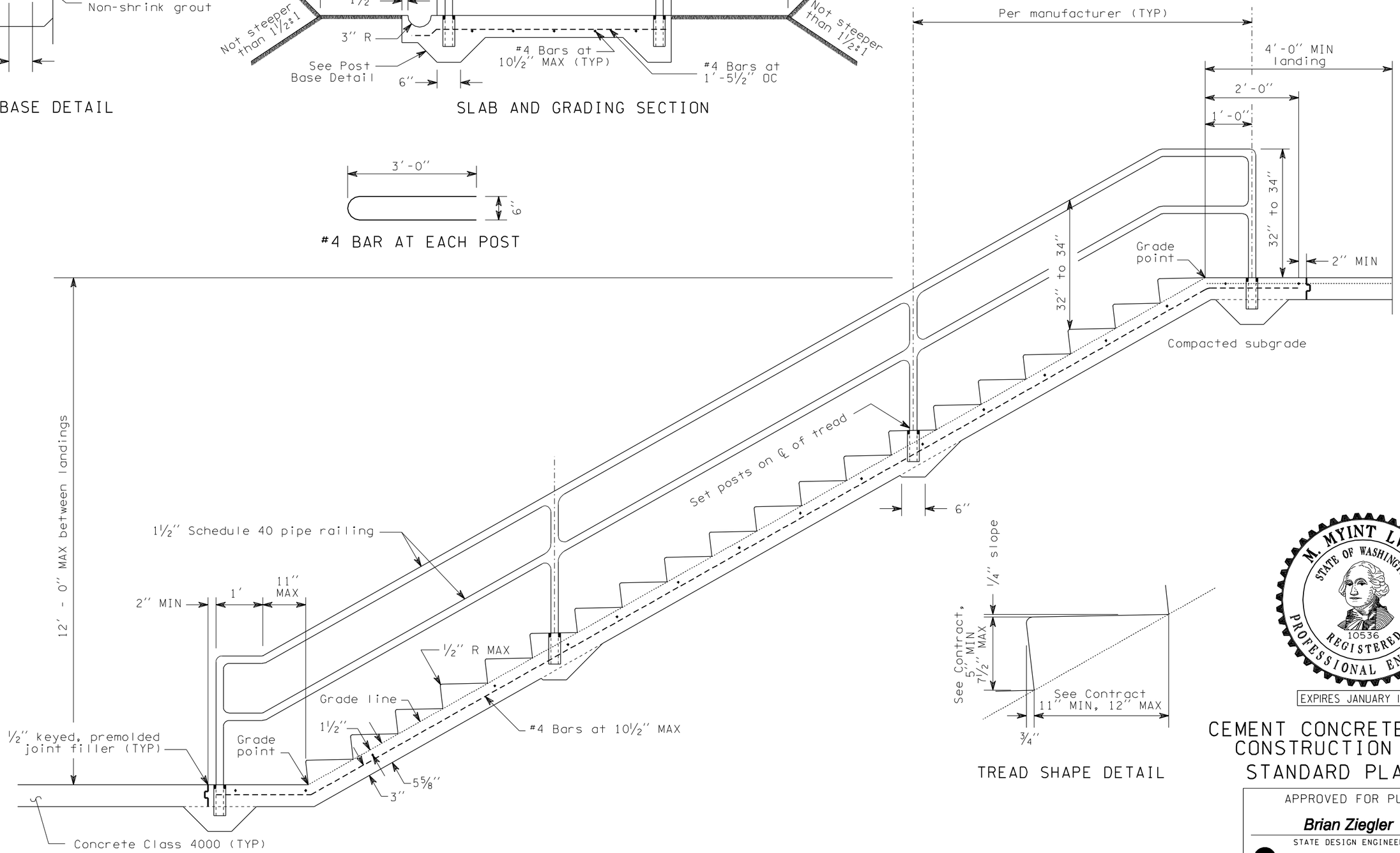

TREAD SHAPE DETAIL

M. MYINT LWIN
STATE OF WASHINGTON
10536
REGISTERED
PROFESSIONAL ENGINEER

EXPIRES JANUARY 17, 1999

NOTE: THIS PLAN IS NOT A LEGAL ENGINEERING DOCUMENT BUT AN ELECTRONIC DUPLICATE. THE ORIGINAL, SIGNED BY THE ENGINEER AND APPROVED FOR PUBLICATION, IS KEPT ON FILE AT THE WASHINGTON STATE DEPARTMENT OF TRANSPORTATION. A COPY MAY BE OBTAINED UPON REQUEST.

CEMENT CONCRETE STAIRWAY CONSTRUCTION DETAILS STANDARD PLAN H-10

APPROVED FOR PUBLICATION

Brian Ziegler — 5/29/98

STATE DESIGN ENGINEER — DATE

WASHINGTON STATE DEPARTMENT OF TRANSPORTATION
OLYMPIA, WASHINGTON

EFFECTIVE: APRIL 2, 2007 TO JANUARY 6, 2008

EFFECTIVE: APRIL 2, 2007 TO JANUARY 6, 2008

WOOD POST FASTENERS			
SIZE / TYPE	QUANTITY	WASHERS	LOCKNUTS
3/8" DIAM. × 4 3/4" BOLT	2	4	2
3/8" DIAM. × 3/4" BOLT	4	8	4
3/16" DIAM. × 1" SCREW	4	8	4

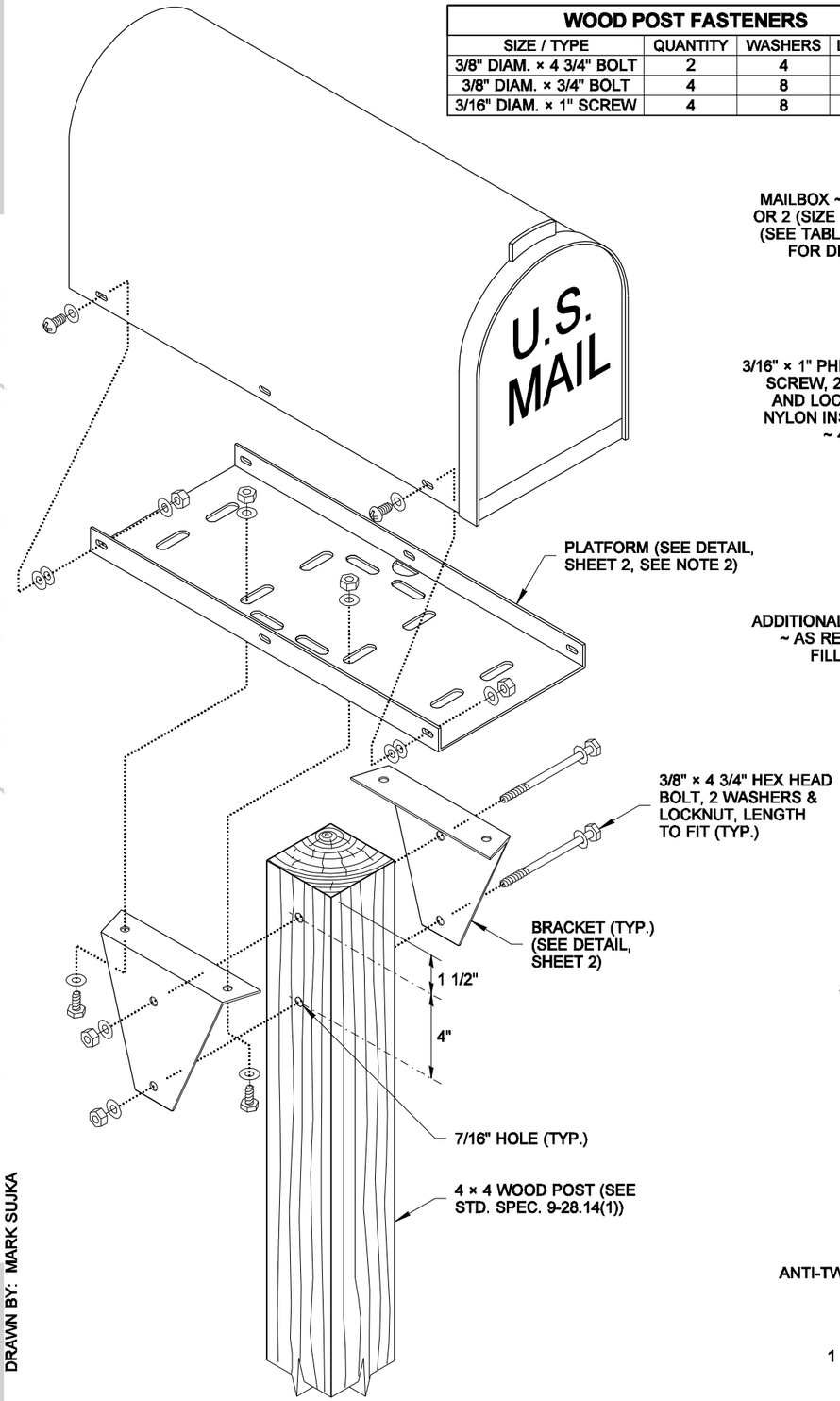

WOOD POST ASSEMBLY DETAIL

(SEE **STEEL POST ASSEMBLY DETAIL** FOR SPECIFICATIONS NOT SHOWN)

STEEL POST FASTENERS			
SIZE / TYPE	QUANTITY	WASHERS	LOCKNUTS
3/8" DIAM. × 2 3/4" BOLT	2	4	2
3/8" DIAM. × 3/4" BOLT	4	8	4
3/16" DIAM. × 1" SCREW	4	8	4
1 7/8" M-CLAMP	2	4	4

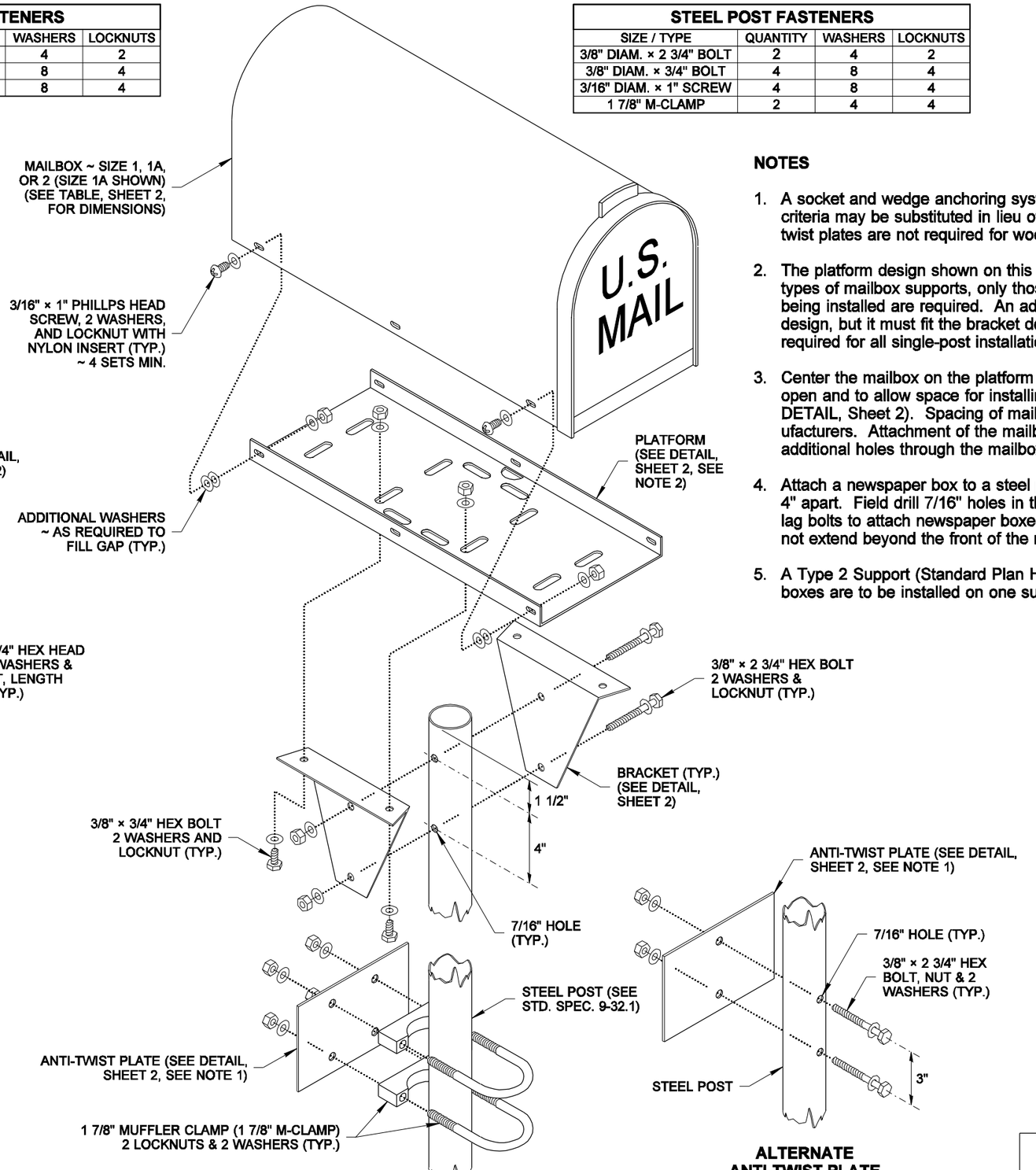

STEEL POST ASSEMBLY DETAIL

ALTERNATE ANTI-TWIST PLATE DESIGN

NOTES

1. A socket and wedge anchoring system that meets the NCHRP 350 crash test criteria may be substituted in lieu of the anti-twist plate designs shown. Anti-twist plates are not required for wood post installations.
2. The platform design shown on this plan features slots that accomodate several types of mailbox supports, only those slots necessary for assembling the type being installed are required. An adjustable platform may be used in lieu of this design, but it must fit the bracket design shown on this plan. Brackets are required for all single-post installations. Field drilling may be necessary.
3. Center the mailbox on the platform to ensure space for the mailbox door to open and to allow space for installing the fasteners (See ALIGNMENT DETAIL, Sheet 2). Spacing of mailbox mounting holes varies among manufacturers. Attachment of the mailbox to the platform may require drilling additional holes through the mailbox to fit the platform.
4. Attach a newspaper box to a steel post with two 1 7/8" Muffler Clamps spaced 4" apart. Field drill 7/16" holes in the newspaper box to fit. Use 2 1/2" × 1/4" lag bolts to attach newspaper boxes to wood posts. Newspaper boxes must not extend beyond the front of the mailbox when the mailbox door is closed.
5. A Type 2 Support (Standard Plan H-12a) is required when 2 or more mailboxes are to be installed on one support.



EXPIRES JULY 24, 2006

NOTE: THIS PLAN IS NOT A LEGAL ENGINEERING DOCUMENT BUT AN ELECTRONIC DUPLICATE. THE ORIGINAL, SIGNED BY THE ENGINEER AND APPROVED FOR PUBLICATION, IS KEPT ON FILE AT THE WASHINGTON STATE DEPARTMENT OF TRANSPORTATION. A COPY MAY BE OBTAINED UPON REQUEST.

MAILBOX SUPPORT TYPE 1

STANDARD PLAN H-12

SHEET 1 OF 2 SHEETS

APPROVED FOR PUBLICATION

Harold J. Peterfeso — STATE DESIGN ENGINEER

02-25-05 — DATE

Washington State Department of Transportation

DRAWN BY: MARK SUJKA

EFFECTIVE: APRIL 2, 2007 TO JANUARY 6, 2008

EFFECTIVE: APRIL 2, 2007 TO JANUARY 6, 2008

MAILBOX & PLATFORM DIMENSIONS						
SIZE	MAILBOX DIMENSIONS			PLATFORM DIMENSIONS		
	L	W	H	L	W	H
1	19"	6 1/2"	8 1/2"	17"	6"	1"
1A	21"	8"	10 1/2"	19"	7 1/2"	1"
2	24"	11 1/2"	13 1/2"	21"	11"	1"

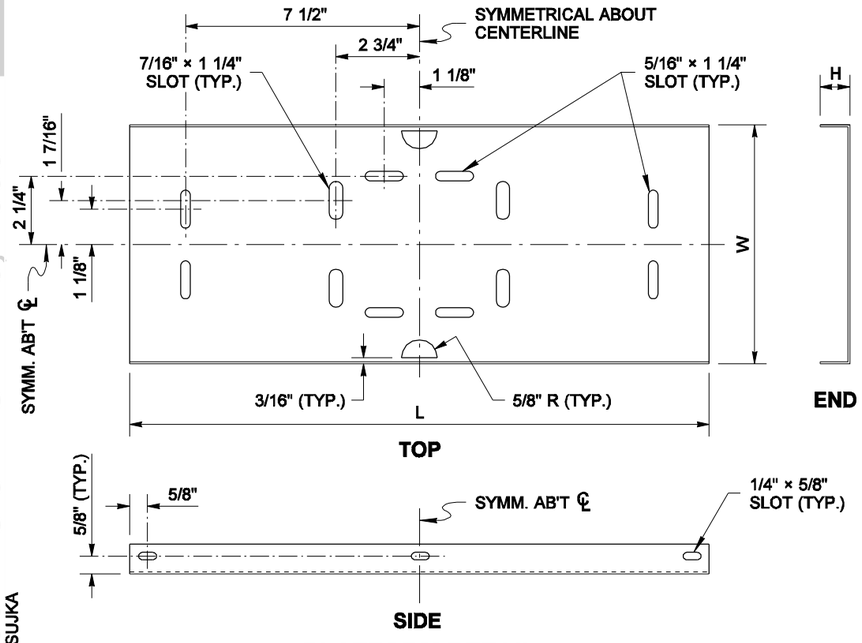

PLATFORM DETAIL

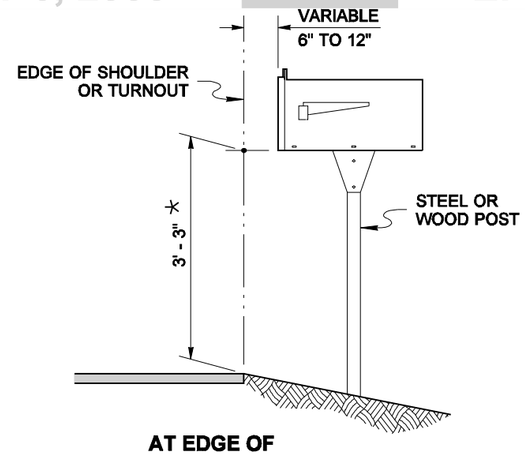

AT EDGE OF SHOULDER

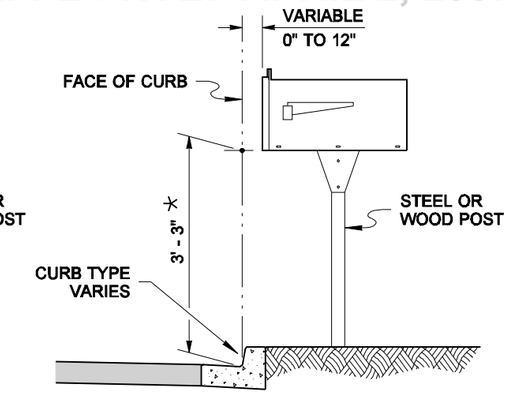

BEHIND CURB

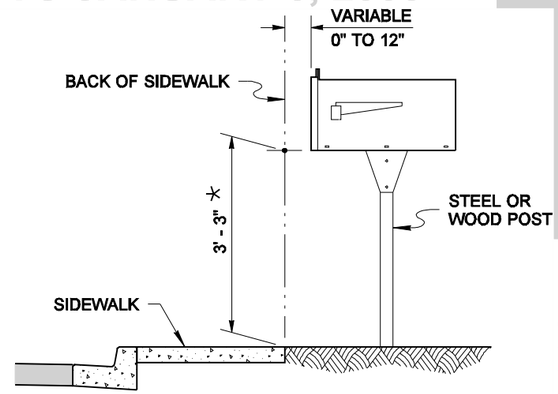

BEHIND SIDEWALK

✶ UNLESS OTHERWISE SHOWN IN THE PLANS

MAILBOX PLACEMENT SECTIONS

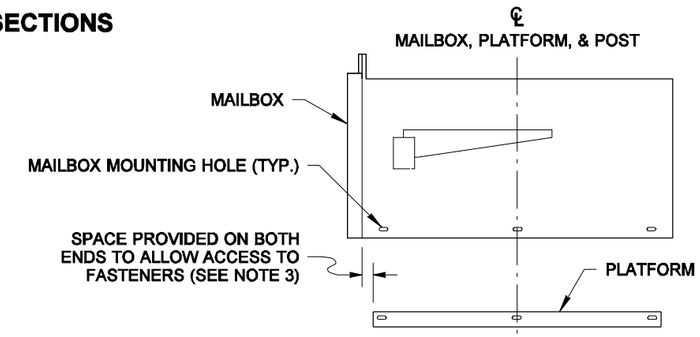

ALIGNMENT DETAIL

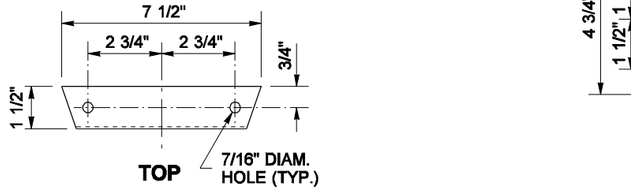

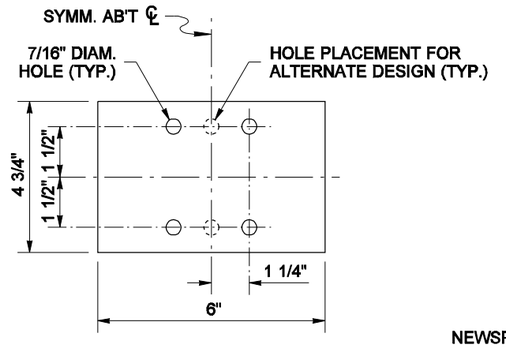

ANTI-TWIST PLATE DETAIL

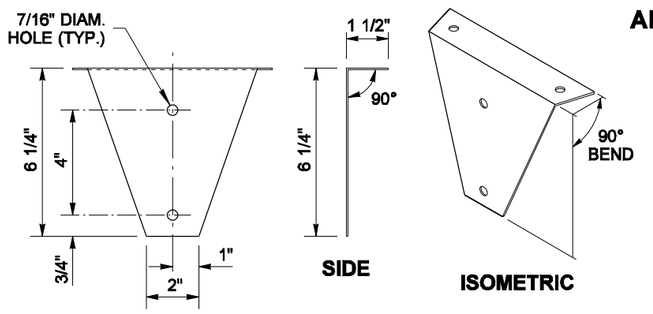

BRACKET DETAIL

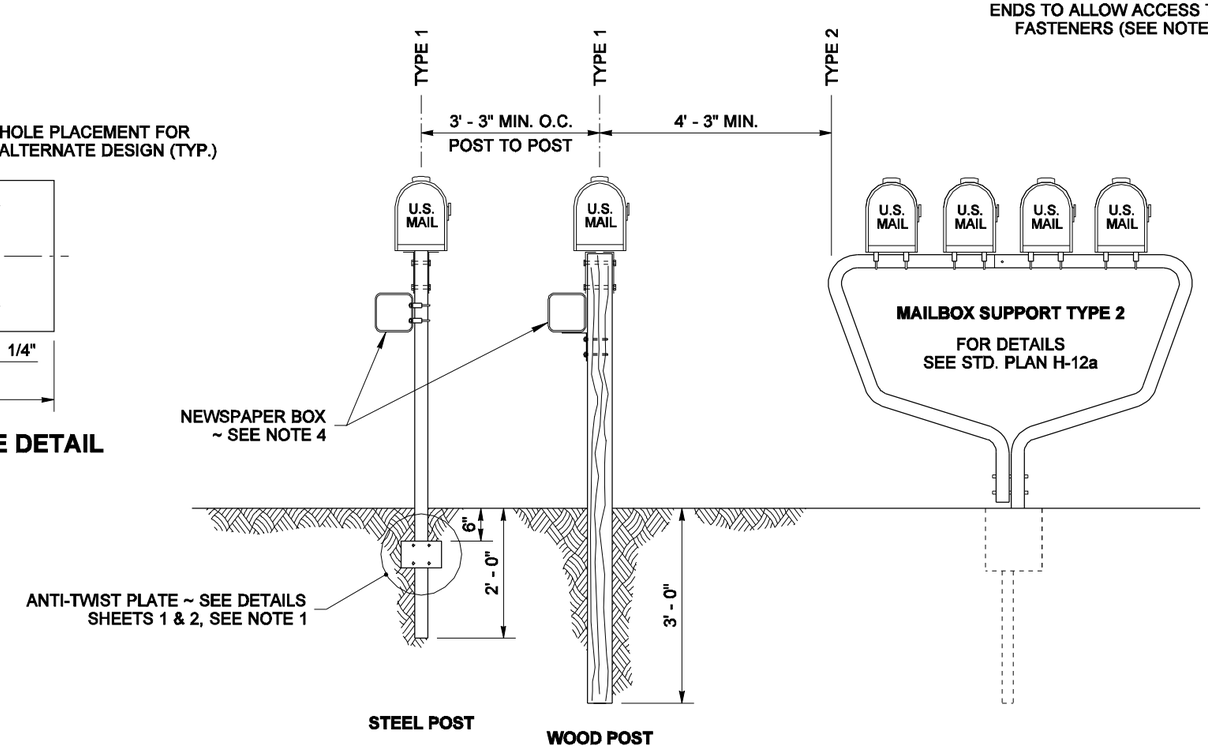

POST PLACEMENT DETAIL

DRAWN BY: MARK SUJKA

RICHARD BARSTOW ALBIN
STATE OF WASHINGTON
34042
REGISTERED
PROFESSIONAL ENGINEER

EXPIRES JULY 24, 2006

NOTE: THIS PLAN IS NOT A LEGAL ENGINEERING DOCUMENT BUT AN ELECTRONIC DUPLICATE. THE ORIGINAL, SIGNED BY THE ENGINEER AND APPROVED FOR PUBLICATION, IS KEPT ON FILE AT THE WASHINGTON STATE DEPARTMENT OF TRANSPORTATION. A COPY MAY BE OBTAINED UPON REQUEST.

MAILBOX SUPPORT TYPE 1

STANDARD PLAN H-12

SHEET 2 OF 2 SHEETS

APPROVED FOR PUBLICATION

Harold J. Peterfeso — STATE DESIGN ENGINEER

02-25-05 — DATE

Washington State Department of Transportation

EFFECTIVE: APRIL 2, 2007 TO JANUARY 6, 2008

EFFECTIVE: APRIL 2, 2007 TO JANUARY 6, 2008

EFFECTIVE: APRIL 2, 2007 TO JANUARY 6, 2008

DRAWN BY: MARK SUJKA

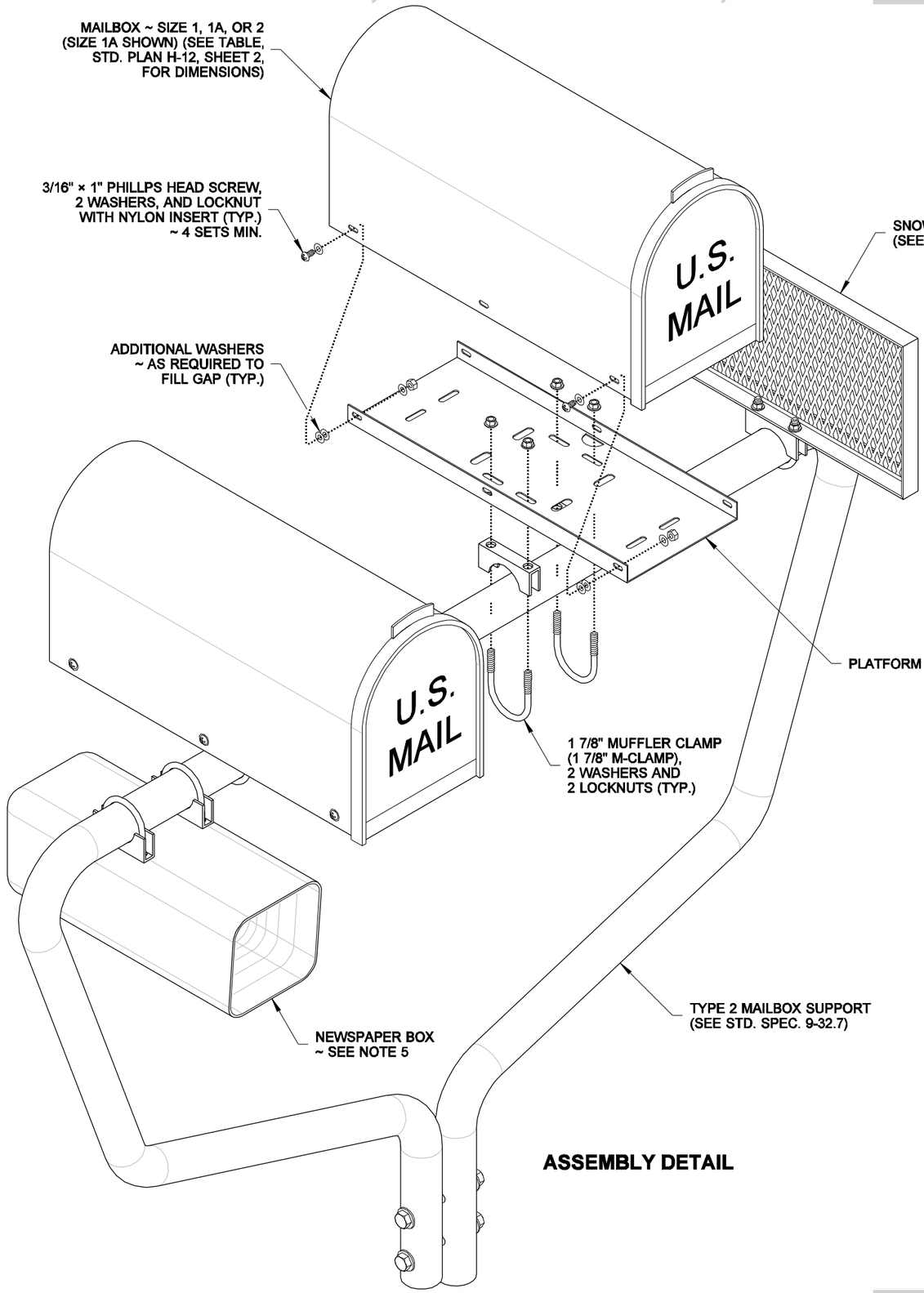

ASSEMBLY DETAIL

NOTES

1. The anchoring system shall meet NCHRP 350 crash test criteria. Use a socket and wedge system, or the anchoring system supplied by or recommended by the Type 2 Support manufacturer.

2. A maximum of 5 mailboxes may be installed on a Type 2 Support.

3. The Platform design shown in this plan is detailed in the PLATFORM DETAIL, Standard Plan H-12, Sheet 2. This design features slots that accomodate several types of mailbox supports; only those slots necessary for assembling the type being installed are required. An adjustable platform may be used in lieu of this platform design. Adjustable platforms must fit the 1 7/8" M-Clamp.

4. Center the mailbox on the platform to ensure space for the mailbox door to open and to allow space for installing the fasteners (See ALIGNMENT DETAIL). Spacing of mailbox mounting holes varies among manufacturers. Attachment of the mailbox to the platform may require drilling additional holes through the mailbox to fit the platform.

5. Attach a newspaper box to a Type 2 Support with two 1 7/8" Muffler Clamps spaced 4" apart. Field drill 7/16" holes in the newspaper box to fit. Newspaper boxes must not extend beyond the front of the mailbox when the mailbox door is closed.

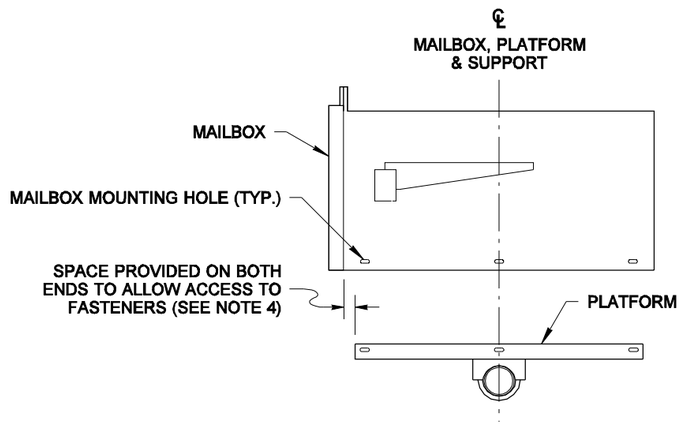

ALIGNMENT DETAIL

SEE NOTE 4

RICHARD BARSTOW ALBIN
STATE OF WASHINGTON
34042
REGISTERED
PROFESSIONAL ENGINEER

EXPIRES JULY 24, 2006

NOTE: THIS PLAN IS NOT A LEGAL ENGINEERING DOCUMENT BUT AN ELECTRONIC DUPLICATE. THE ORIGINAL, SIGNED BY THE ENGINEER AND APPROVED FOR PUBLICATION, IS KEPT ON FILE AT THE WASHINGTON STATE DEPARTMENT OF TRANSPORTATION. A COPY MAY BE OBTAINED UPON REQUEST.

MAILBOX SUPPORT TYPE 2

STANDARD PLAN H-12a

SHEET 1 OF 2 SHEETS

APPROVED FOR PUBLICATION

Harold J. Peterfeso — STATE DESIGN ENGINEER

02-25-05 — DATE

Washington State Department of Transportation

EFFECTIVE: APRIL 2, 2007 TO JANUARY 6, 2008

EFFECTIVE: APRIL 2, 2007 TO JANUARY 6, 2008

EFFECTIVE: APRIL 2, 2007 TO JANUARY 6, 2008

EFFECTIVE: APRIL 2, 2007 TO JANUARY 6, 2008

EFFECTIVE: APRIL 2, 2007 TO JANUARY 6, 2008

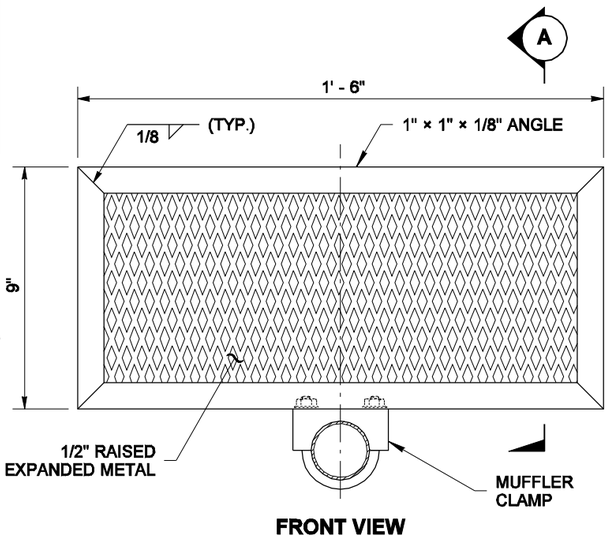

FRONT VIEW

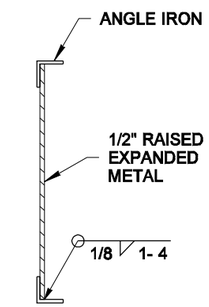

SECTION (A)

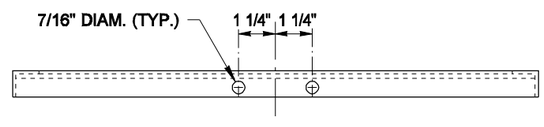

BOTTOM VIEW

SNOW GUARD DETAIL

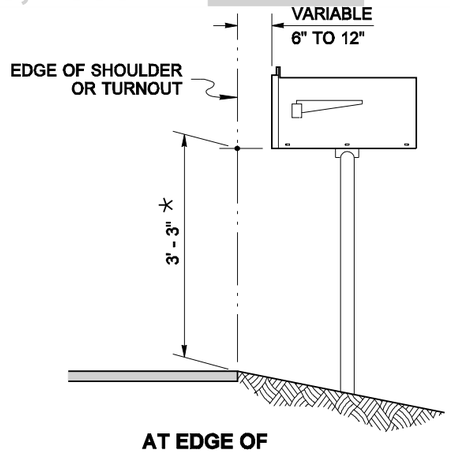

AT EDGE OF SHOULDER

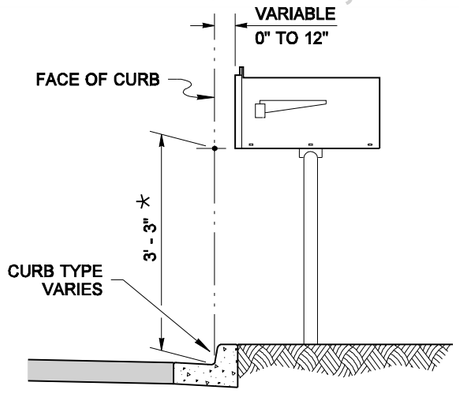

BEHIND CURB

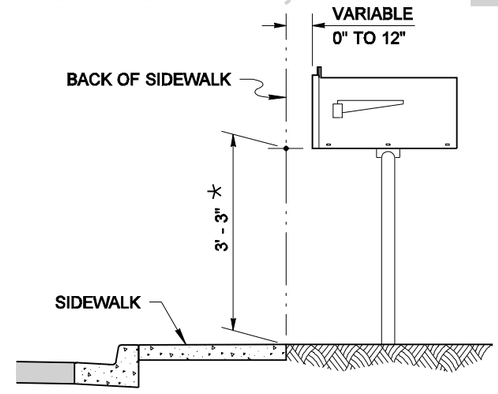

BEHIND SIDEWALK

✶ UNLESS OTHERWISE SHOWN IN THE PLANS

MAILBOX PLACEMENT SECTIONS

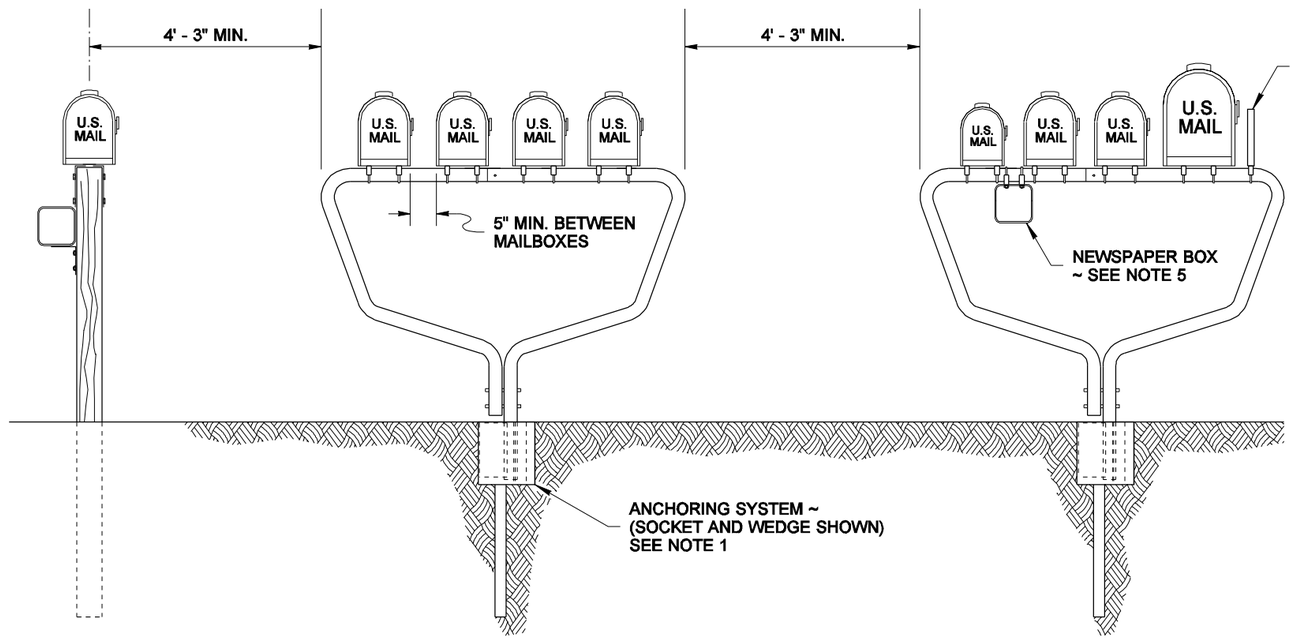

MAILBOX SUPPORT TYPE 1
(WOOD POST SHOWN)

FOR DETAILS
SEE STD. PLAN H-12

MAILBOX SUPPORTS TYPE 2

SPACING DETAIL

DRAWN BY: MARK SUJKA

RICHARD BARSTOW ALBIN
STATE OF WASHINGTON
34042
REGISTERED
PROFESSIONAL ENGINEER

EXPIRES JULY 24, 2006

NOTE: THIS PLAN IS NOT A LEGAL ENGINEERING DOCUMENT BUT AN ELECTRONIC DUPLICATE. THE ORIGINAL, SIGNED BY THE ENGINEER AND APPROVED FOR PUBLICATION, IS KEPT ON FILE AT THE WASHINGTON STATE DEPARTMENT OF TRANSPORTATION. A COPY MAY BE OBTAINED UPON REQUEST.

MAILBOX SUPPORT TYPE 2

STANDARD PLAN H-12a

SHEET 2 OF 2 SHEETS

APPROVED FOR PUBLICATION

Harold J. Peterfeso — STATE DESIGN ENGINEER — *02-25-05* — DATE

Washington State Department of Transportation

EFFECTIVE: APRIL 2, 2007 TO JANUARY 6, 2008

EFFECTIVE: APRIL 2, 2007 TO JANUARY 6, 2008

DRAWN BY: MARK SUJKA

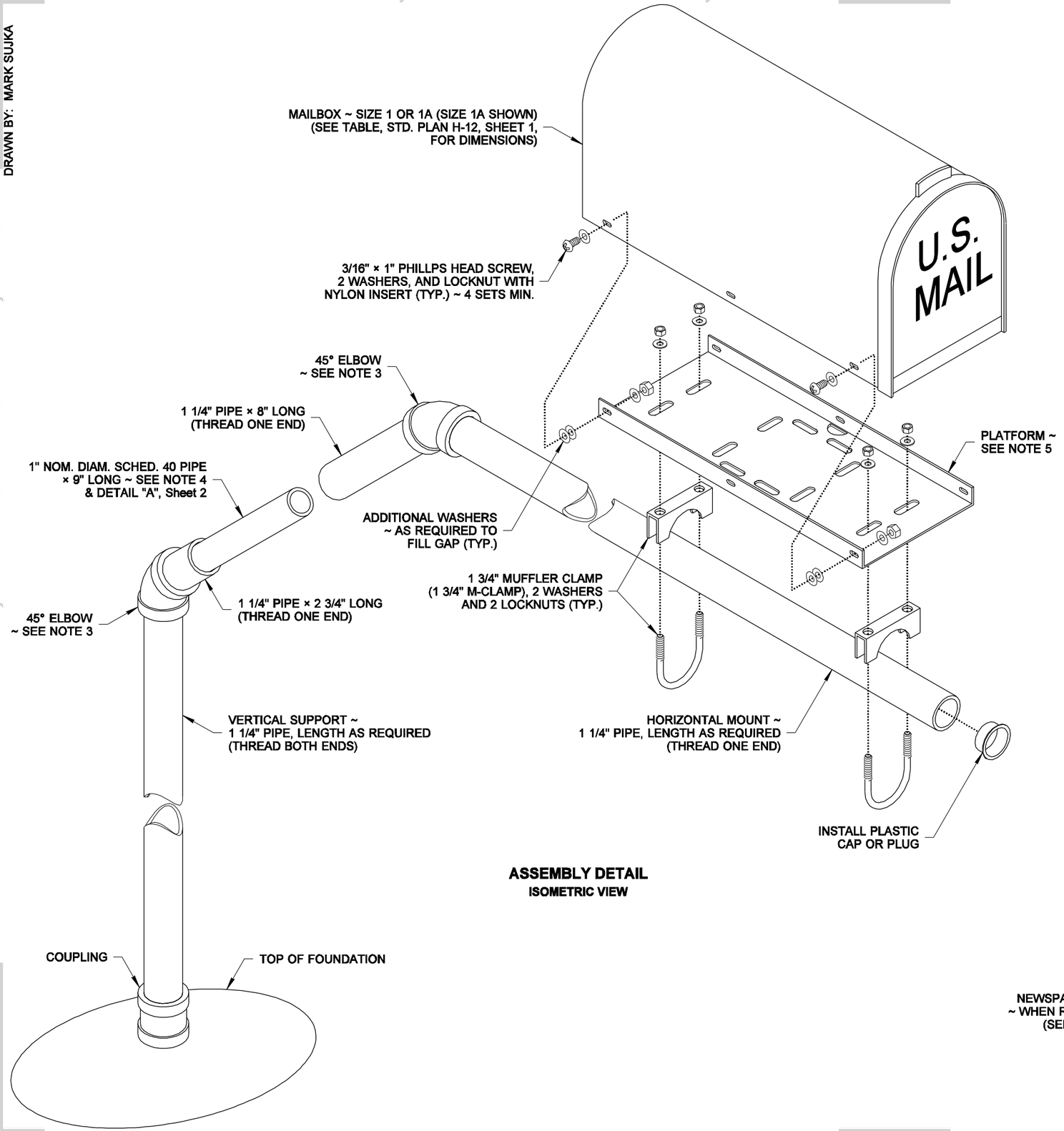

ASSEMBLY DETAIL
ISOMETRIC VIEW

NOTES

1. The insert pipe is 1" nominal diameter, Schedule 40 steel pipe, as indicated; all other pipe shown on this plan is 1 1/4" nominal diameter, Schedule 40 steel pipe. All pipe, couplings, and elbows shall be galvanized in accordance with ASTM A 153.
2. The vertical support may be cast in a concrete foundation, or bolted to a U-channel post (see PLACEMENT DETAIL, Sheet 2). Avoid placing the vertical support in the flow line of a ditch.
3. The pipe angles required in this design may be achieved by using pipe fittings, or by bending the pipes. See DETAIL "A", Sheet 2.
4. Coat the 1" diam. pipe with grease (petroleum) before sliding the 1 1/4" diam. pipe (cantilever arm) onto it, to aid rotation and to guard against corrosion.
5. The Platform design shown in this plan is detailed in the PLATFORM DETAIL, Standard Plan H-12, Sheet 2. This design features slots that accomodate several types of mailbox supports; only those slots necessary for assembling the type being installed are required.
6. Match the edge of the mailbox platform to the end of the horizontal pipe mount. Center the mailbox on the platform to ensure space for the mailbox door to open and to allow space for installing the fasteners. Spacing of mailbox mounting holes varies among manufacturers. Attachment of the mailbox to the platform may require drilling additional holes through the mailbox to fit the platform. See ALIGNMENT DETAIL.
7. Attach a newspaper box to the pipe with two 1 3/4" muffler clamps spaced 4" apart. Newspaper boxes must not extend beyond the front of the mailbox when the mailbox door is closed.

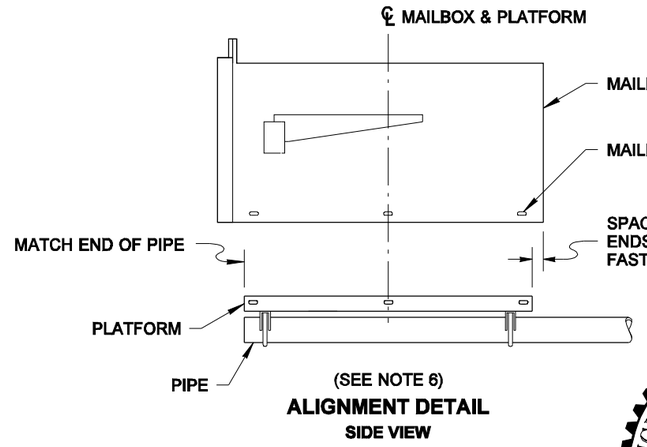

ALIGNMENT DETAIL
SIDE VIEW

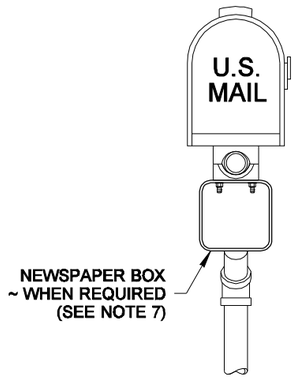

NEWSPAPER BOX ATTACHMENT DETAIL
ELEVATION VIEW

RICHARD BARSTOW ALBIN
STATE OF WASHINGTON
34042
REGISTERED
PROFESSIONAL ENGINEER

EXPIRES JULY 24, 2006

NOTE: THIS PLAN IS NOT A LEGAL ENGINEERING DOCUMENT BUT AN ELECTRONIC DUPLICATE. THE ORIGINAL, SIGNED BY THE ENGINEER AND APPROVED FOR PUBLICATION, IS KEPT ON FILE AT THE WASHINGTON STATE DEPARTMENT OF TRANSPORTATION. A COPY MAY BE OBTAINED UPON REQUEST.

MAILBOX SUPPORT TYPE 3

STANDARD PLAN H-12b

SHEET 1 OF 2 SHEETS

APPROVED FOR PUBLICATION

Harold J. Peterfeso — STATE DESIGN ENGINEER — *02-25-05* — DATE

Washington State Department of Transportation

EFFECTIVE: APRIL 2, 2007 TO JANUARY 6, 2008

EFFECTIVE: APRIL 2, 2007 TO JANUARY 6, 2008

DRAWN BY: MARK SUJKA

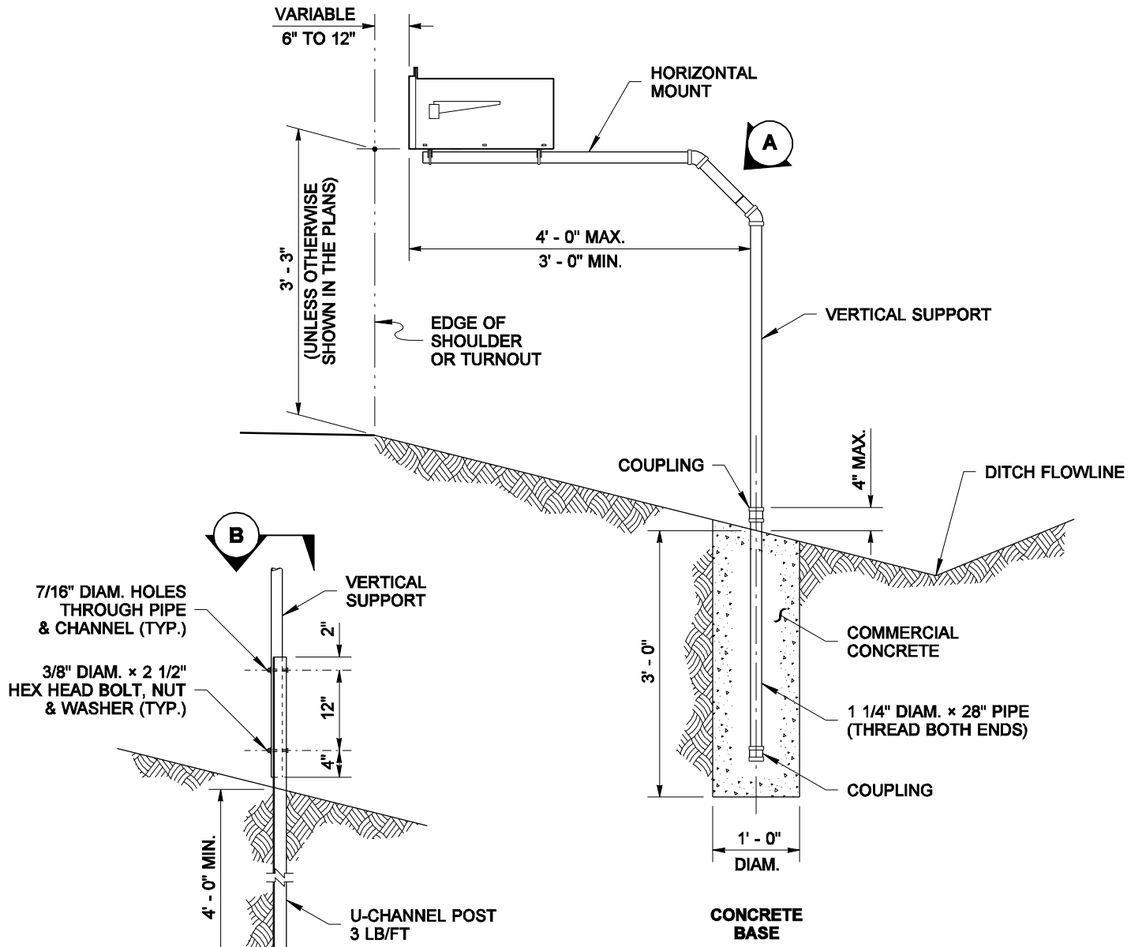

PLACEMENT DETAIL
SECTION VIEW

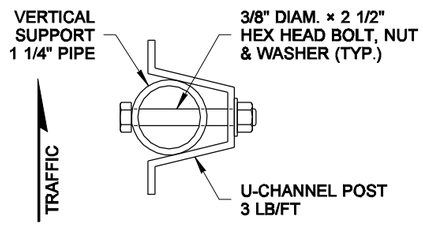

SECTION B

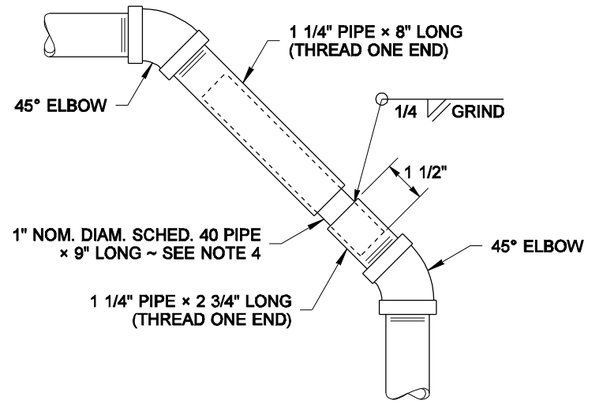

PIPE FITTING ANGLES

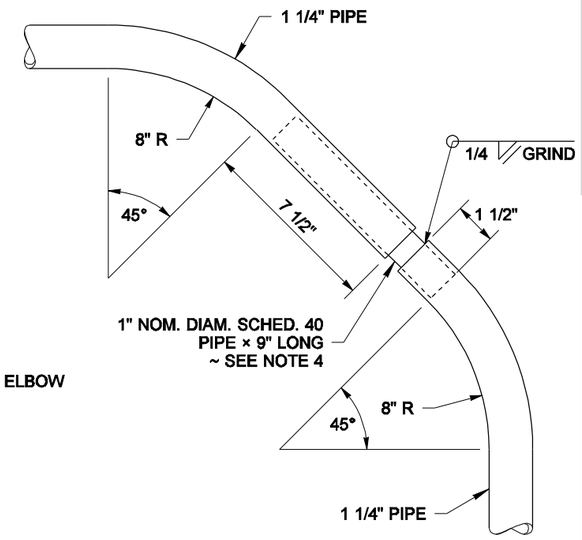

PIPE BENDING ANGLES

DETAIL A

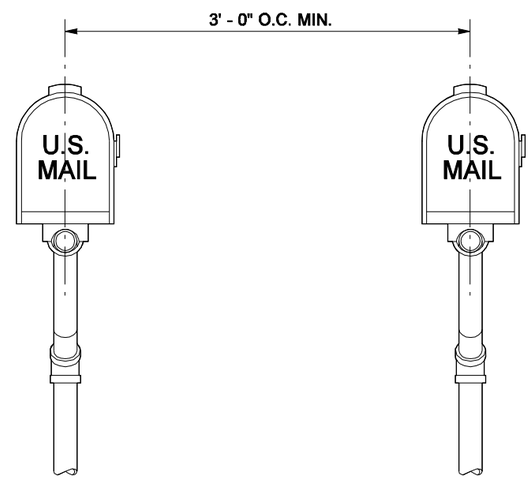

SPACING DETAIL
ELEVATION VIEW

RICHARD BARSTOW ALBIN
STATE OF WASHINGTON
34042
REGISTERED
PROFESSIONAL ENGINEER

EXPIRES JULY 24, 2006

NOTE: THIS PLAN IS NOT A LEGAL ENGINEERING DOCUMENT BUT AN ELECTRONIC DUPLICATE. THE ORIGINAL, SIGNED BY THE ENGINEER AND APPROVED FOR PUBLICATION, IS KEPT ON FILE AT THE WASHINGTON STATE DEPARTMENT OF TRANSPORTATION. A COPY MAY BE OBTAINED UPON REQUEST.

MAILBOX SUPPORT TYPE 3

STANDARD PLAN H-12b

SHEET 2 OF 2 SHEETS

APPROVED FOR PUBLICATION

Harold J. Peterfeso — STATE DESIGN ENGINEER — *02-25-05* — DATE

Washington State Department of Transportation

EFFECTIVE: APRIL 2, 2007 TO JANUARY 6, 2008

EFFECTIVE: APRIL 2, 2007 TO JANUARY 6, 2008

DRAWN BY: ELENA BRUNSTEIN

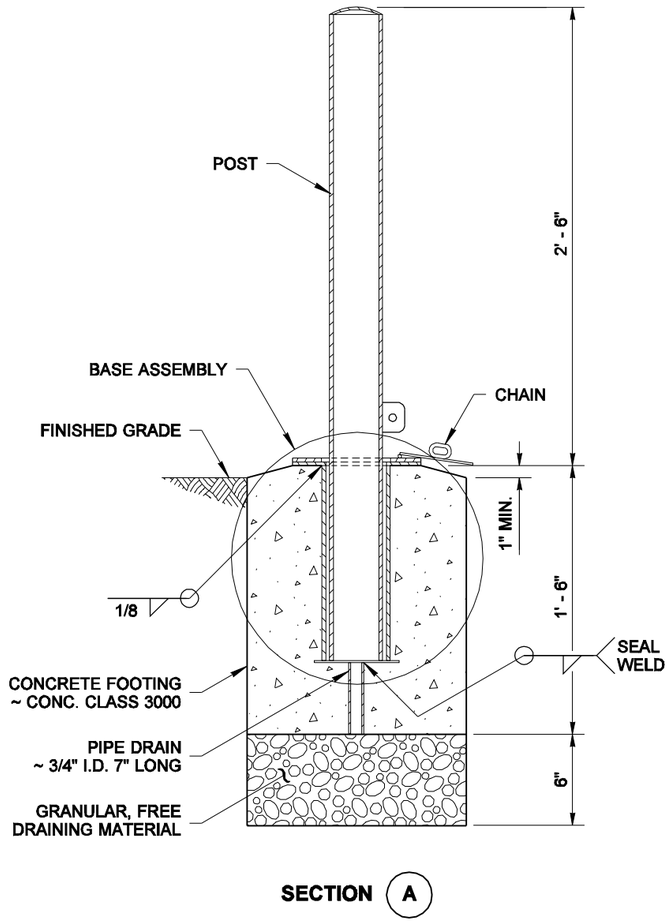

SECTION (A)

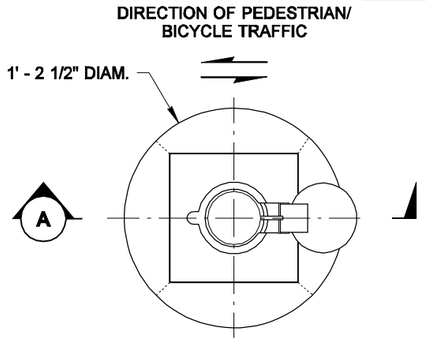

ROUND FOOTING

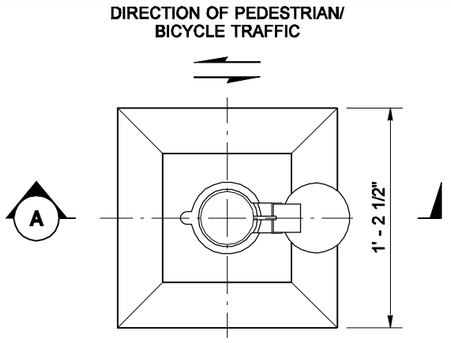

SQUARE FOOTING

PLAN VIEW

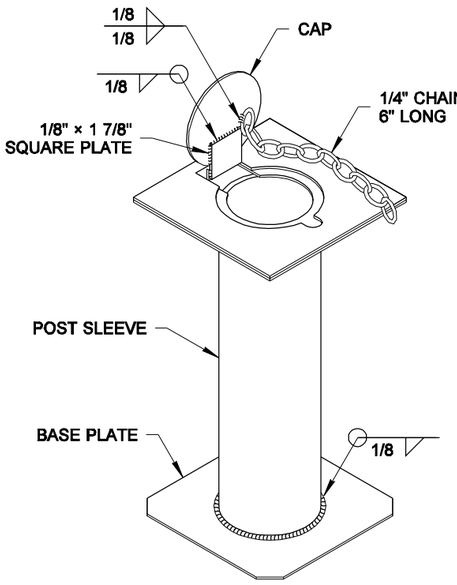

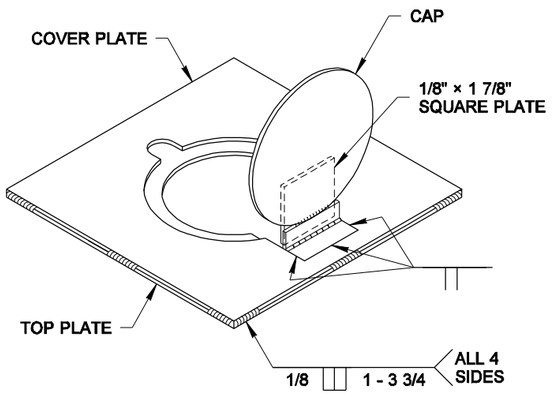

BASE ASSEMBLY

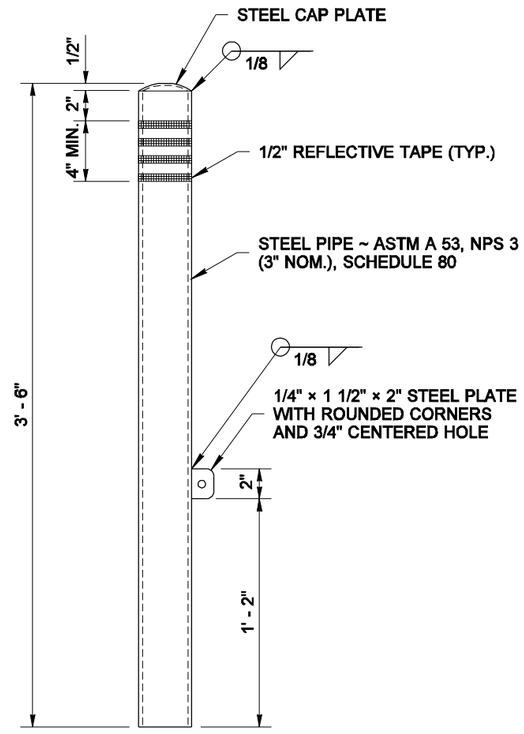

POST

NOTE

This bollard does not have an effective breakaway design feature and cannot be installed within the Design Clear Zone.

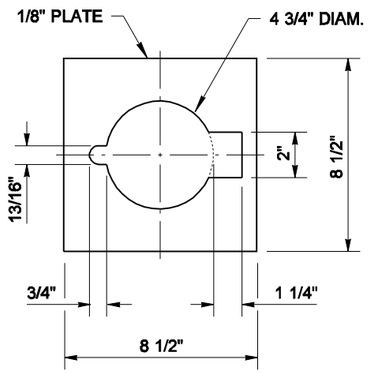

COVER PLATE

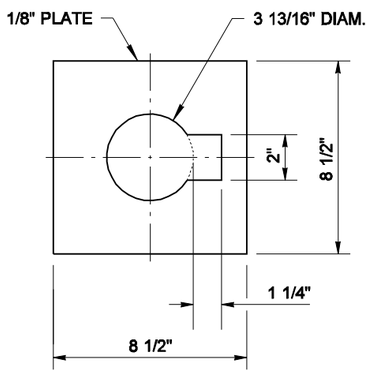

TOP PLATE

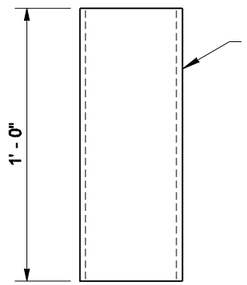

POST SLEEVE

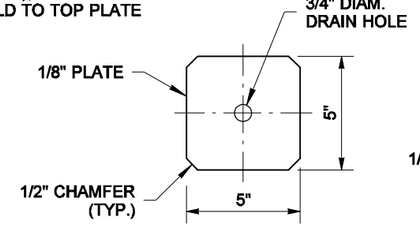

BASE PLATE

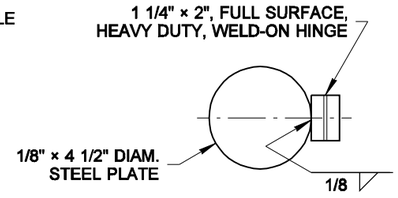

CAP AND HINGE

HAROLD J. PETERFESO
STATE OF WASHINGTON
21861
REGISTERED
PROFESSIONAL ENGINEER

EXPIRES MAY 16, 2005

NOTE: THIS PLAN IS NOT A LEGAL ENGINEERING DOCUMENT BUT AN ELECTRONIC DUPLICATE. THE ORIGINAL, SIGNED BY THE ENGINEER, AND APPROVED FOR PUBLICATION, IS KEPT ON FILE AT THE WASHINGTON STATE DEPARTMENT OF TRANSPORTATION. A COPY MAY BE OBTAINED UPON REQUEST.

BOLLARD TYPE 1

STANDARD PLAN H-13

SHEET 1 OF 1 SHEET

APPROVED FOR PUBLICATION

Harold J. Peterfeso — STATE DESIGN ENGINEER — *02-25-05* — DATE

Washington State Department of Transportation

EFFECTIVE: APRIL 2, 2007 TO JANUARY 6, 2008

EFFECTIVE: APRIL 2, 2007 TO JANUARY 6, 2008

DRAWN BY: ELENA BRUNSTEIN

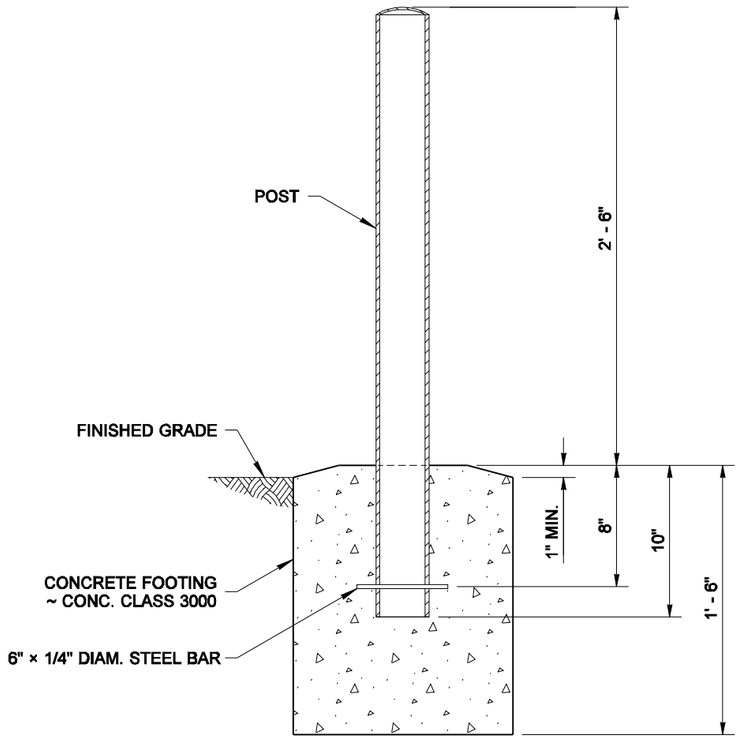

SECTION (A)

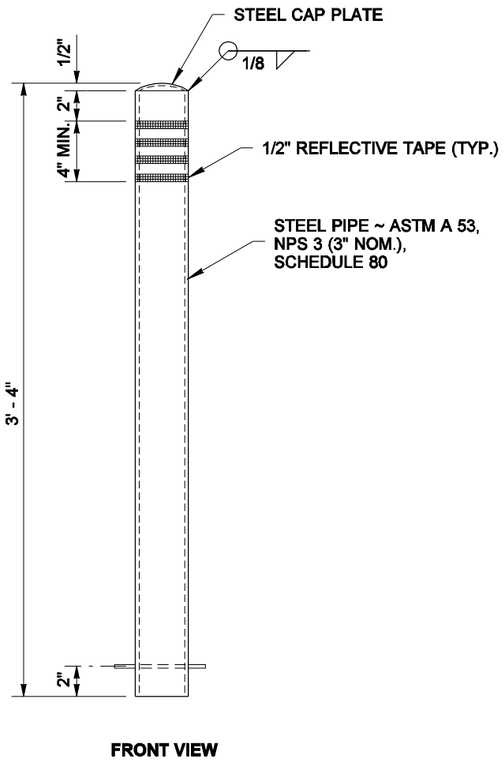

FRONT VIEW

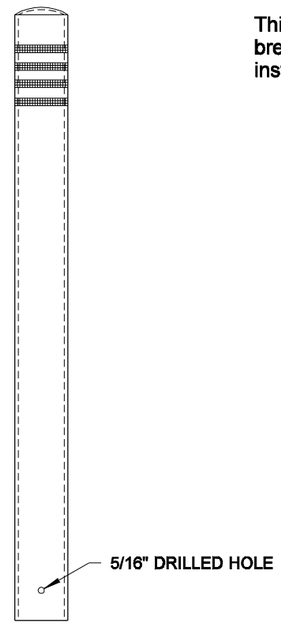

SIDE VIEW

POST

NOTE

This bollard does not have an effective breakaway design feature and cannot be installed within the Design Clear Zone.

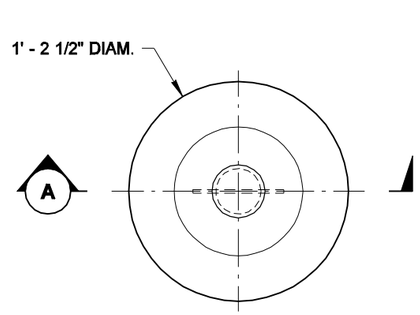

ROUND FOOTING

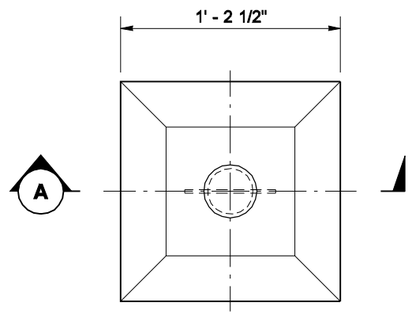

SQUARE FOOTING

PLAN VIEW

HAROLD J. PETERFESO
STATE OF WASHINGTON
21861
REGISTERED
PROFESSIONAL ENGINEER

EXPIRES MAY 16, 2005

NOTE: THIS PLAN IS NOT A LEGAL ENGINEERING DOCUMENT BUT AN ELECTRONIC DUPLICATE. THE ORIGINAL, SIGNED BY THE ENGINEER, AND APPROVED FOR PUBLICATION, IS KEPT ON FILE AT THE WASHINGTON STATE DEPARTMENT OF TRANSPORTATION. A COPY MAY BE OBTAINED UPON REQUEST.

BOLLARD TYPE 2

STANDARD PLAN H-13a

SHEET 1 OF 1 SHEET

APPROVED FOR PUBLICATION

Harold J. Peterfeso — STATE DESIGN ENGINEER — *02-25-05* — DATE

Washington State Department of Transportation

EFFECTIVE: APRIL 2, 2007 TO JANUARY 6, 2008

EFFECTIVE: APRIL 2, 2007 TO JANUARY 6, 2008

DRAWN BY: ADAM COCHRAN

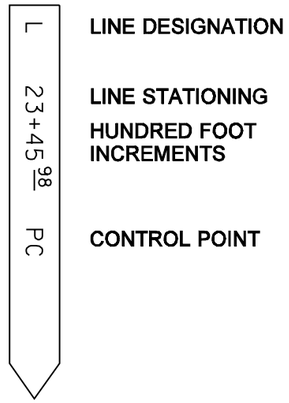

LINE DESIGNATION

LINE STATIONING

HUNDRED FOOT INCREMENTS

CONTROL POINT

ALIGNMENT STAKE

STAKE EVERY 100 FEET ON TANGENTS,
EVERY 25 FEET ON CURVES

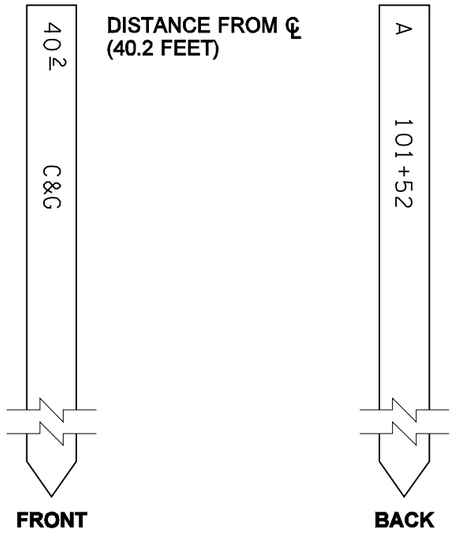

DISTANCE FROM ℄ (40.2 FEET)

LINE DESIGNATION

LINE STATIONING

HUNDRED FOOT INCREMENTS

CLEARING/GRUBBING (C&G) LATH

STAKE AT EACH FULL STATION,
100 FEET ON TANGENTS,
EVERY 25 FEET ON CURVES.
NO HUB NECESSARY.

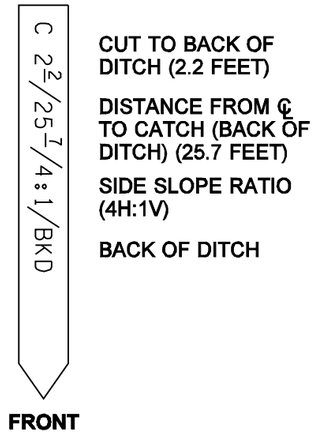

CUT TO BACK OF DITCH (2.2 FEET)

DISTANCE FROM ℄ TO CATCH (BACK OF DITCH) (25.7 FEET)

SIDE SLOPE RATIO (4H:1V)

BACK OF DITCH

LINE DESIGNATION

LINE STATIONING

HUNDRED FOOT INCREMENTS

SLOPE STAKE

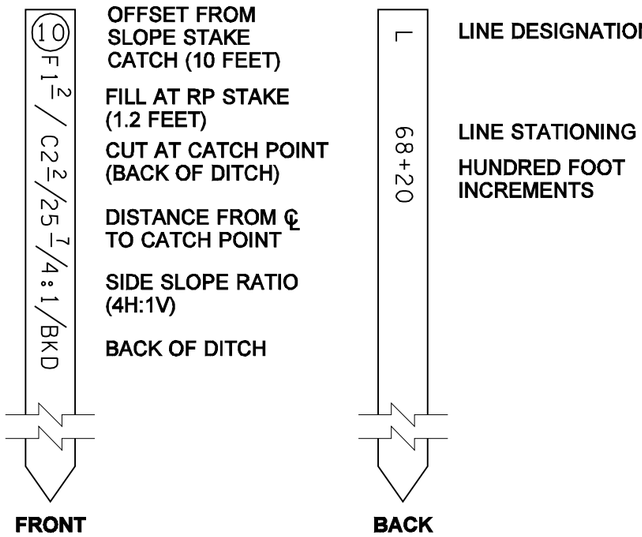

OFFSET FROM SLOPE STAKE CATCH (10 FEET)

FILL AT RP STAKE (1.2 FEET)

CUT AT CATCH POINT (BACK OF DITCH)

DISTANCE FROM ℄ TO CATCH POINT

SIDE SLOPE RATIO (4H:1V)

BACK OF DITCH

LINE DESIGNATION

LINE STATIONING

HUNDRED FOOT INCREMENTS

LATH FOR SLOPE REFERENCES

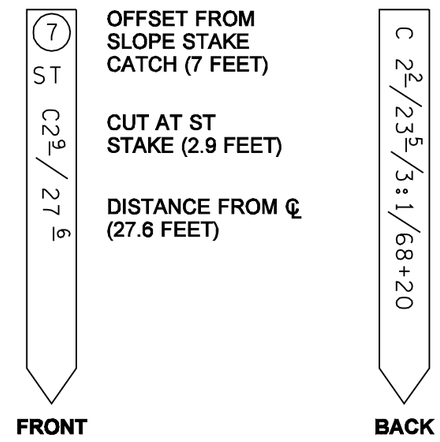

OFFSET FROM SLOPE STAKE CATCH (7 FEET)

CUT AT ST STAKE (2.9 FEET)

DISTANCE FROM ℄ (27.6 FEET)

CUT AT CATCH POINT (2.2 FEET)

DISTANCE FROM ℄ TO CATCH (BACK OF DITCH) (23.5 FEET)

SIDE SLOPE RATIO (3H:1V)

LINE STATIONING

HUNDRED FOOT INCREMENTS

SLOPE TREATMENT (ST) STAKE FOR CUT SECTIONS

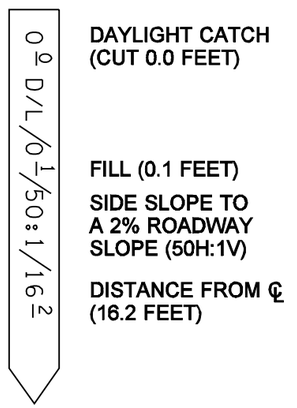

DAYLIGHT CATCH (CUT 0.0 FEET)

FILL (0.1 FEET)

SIDE SLOPE TO A 2% ROADWAY SLOPE (50H:1V)

DISTANCE FROM ℄ (16.2 FEET)

DAYLIGHT (D/L) STAKE



NOTE: THIS PLAN IS NOT A LEGAL ENGINEERING DOCUMENT BUT AN ELECTRONIC DUPLICATE. THE ORIGINAL, SIGNED BY THE ENGINEER AND APPROVED FOR PUBLICATION, IS KEPT ON FILE AT THE WASHINGTON STATE DEPARTMENT OF TRANSPORTATION. A COPY MAY BE OBTAINED UPON REQUEST.

SURVEY STAKES

STANDARD PLAN H-14

SHEET 1 OF 2 SHEETS

APPROVED FOR PUBLICATION

Harold J. Peterfeso — STATE DESIGN ENGINEER

02-09-05 — DATE

Washington State Department of Transportation

EFFECTIVE: APRIL 2, 2007 TO JANUARY 6, 2008

EFFECTIVE: APRIL 2, 2007 TO JANUARY 6, 2008

DRAWN BY: ADAM COCHRAN

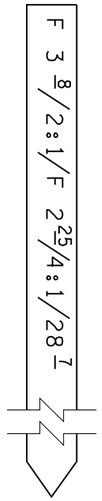

FILL FROM CATCH POINT TO BEGINNING OF SECOND SLOPE (3.8 FEET)

SLOPE RATIO (2H:1V)

FILL TO SUBGRADE SHOULDER (2.25 FEET)

SLOPE RATIO (4H:1V)

DISTANCE FROM ℄ TO CATCH POINT (28.7 FEET)

COMPOUND SLOPE LATH

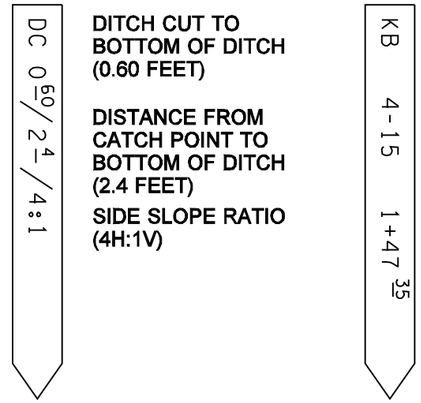

DITCH CUT TO BOTTOM OF DITCH (0.60 FEET)

DISTANCE FROM CATCH POINT TO BOTTOM OF DITCH (2.4 FEET)

SIDE SLOPE RATIO (4H:1V)

STRUCTURE NOTE REFERENCE

PLAN SHEET NUMBER (4) STRUCTURE NOTE NUMBER (15)

DITCH SECTION ALIGNMENT STATIONING

FRONT **BACK**

STAKE FOR DITCH CONSTRUCTION

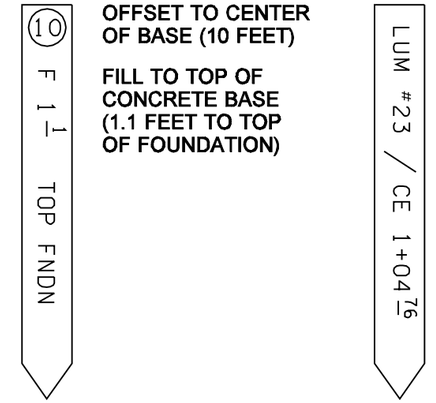

OFFSET TO CENTER OF BASE (10 FEET)

FILL TO TOP OF CONCRETE BASE (1.1 FEET TO TOP OF FOUNDATION)

LUMINAIRE NUMBER (23)

LINE DESIGNATION AND STATIONING

HUNDRED FOOT INCREMENTS

FRONT **BACK**

STAKE FOR FOUNDATION OF LUMINAIRES, SIGNALS OR SIGN STRUCTURES

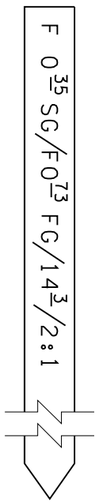

FILL TO SUBGRADE (0.35 FEET)

FILL TO FINISH GRADE (CURB ELEVATION) (0.73 FEET)

DISTANCE FROM ℄ (14.3 FEET)

SLOPE RATIO (2H:1V)

SLOPE LATH FOR CURB SECTION

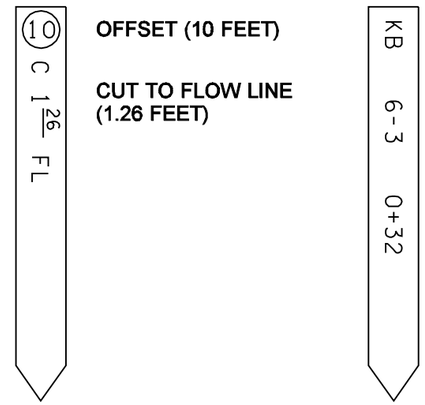

OFFSET (10 FEET)

CUT TO FLOW LINE (1.26 FEET)

STRUCTURE NOTE REFERENCE

PLAN SHEET NUMBER (6) STRUCTURE NOTE NUMBER (3)

DRAINAGE ALIGNMENT STATIONING

25' INCREMENTS

FRONT **BACK**

STAKE FOR DRAINAGE

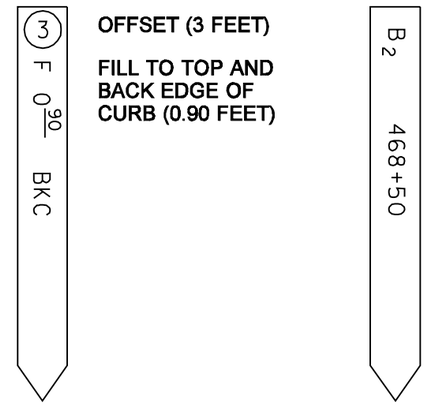

OFFSET (3 FEET)

FILL TO TOP AND BACK EDGE OF CURB (0.90 FEET)

LINE DESIGNATION

LINE STATIONING

HUNDRED FOOT INCREMENTS

FRONT **BACK**

STAKE FOR CURB/GUTTER

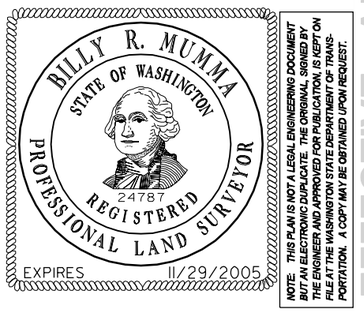

NOTE: THIS PLAN IS NOT A LEGAL ENGINEERING DOCUMENT BUT AN ELECTRONIC DUPLICATE. THE ORIGINAL, SIGNED BY THE ENGINEER AND APPROVED FOR PUBLICATION, IS KEPT ON FILE AT THE WASHINGTON STATE DEPARTMENT OF TRANSPORTATION. A COPY MAY BE OBTAINED UPON REQUEST.

SURVEY STAKES

STANDARD PLAN H-14

SHEET 2 OF 2 SHEETS

APPROVED FOR PUBLICATION

Harold J. Peterfeso *02-09-05*

STATE DESIGN ENGINEER DATE

Washington State Department of Transportation

EFFECTIVE: APRIL 2, 2007 TO JANUARY 6, 2008

EFFECTIVE: APRIL 2, 2007 TO JANUARY 6, 2008

APPROXIMATE QUANTITIES				
Tank Capacity	Length (X)	Concrete	Steel Reinf. Bars	Cast Iron Soil Pipe & Fitting
Gal.	Ft.	C.Y.	Lbs.	Lbs.
6000	6	23	3800	471
8000	8	28	4600	471
10000	10	32	5400	471
12000	12	37	6300	471
14000	14	42	7100	471

NOTES:

1. Approval of local health department is required before work is started.
2. Excavated material shall be disposed of as directed by the Engineer.
3. All work shall be left open until inspected and approved by the Health Officer and the Engineer.
4. All grades shall be checked and approved by the Engineer.
5. Water tight manhole covers shall be approved by the Engineer prior to installation.
6. Precast septic tanks are acceptable, subject to the approval of the Engineer. Materials shall meet or exceed those shown.
7. Plan dimensions may vary as site conditions and system design permit.
8. All concrete shall be Class 4000.
9. Reinforcing steel shall be Grade 300 or Grade 400.

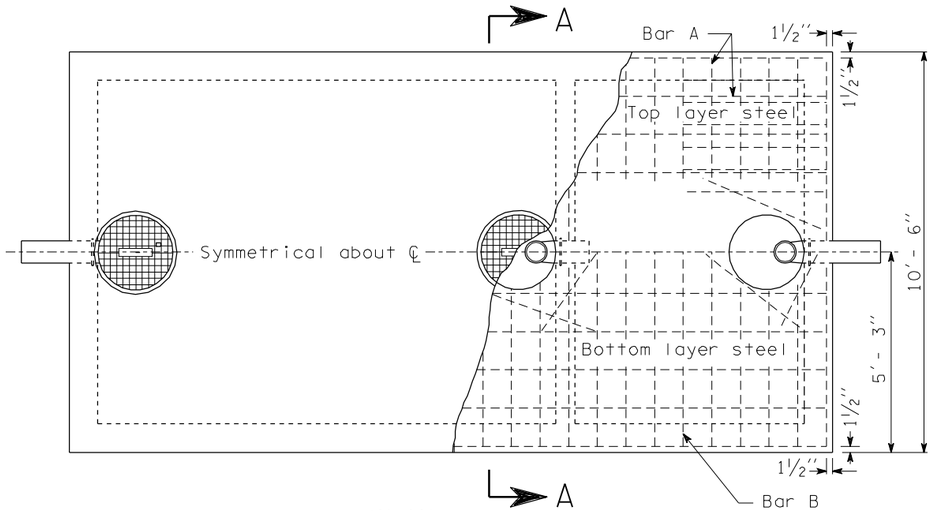

PLAN

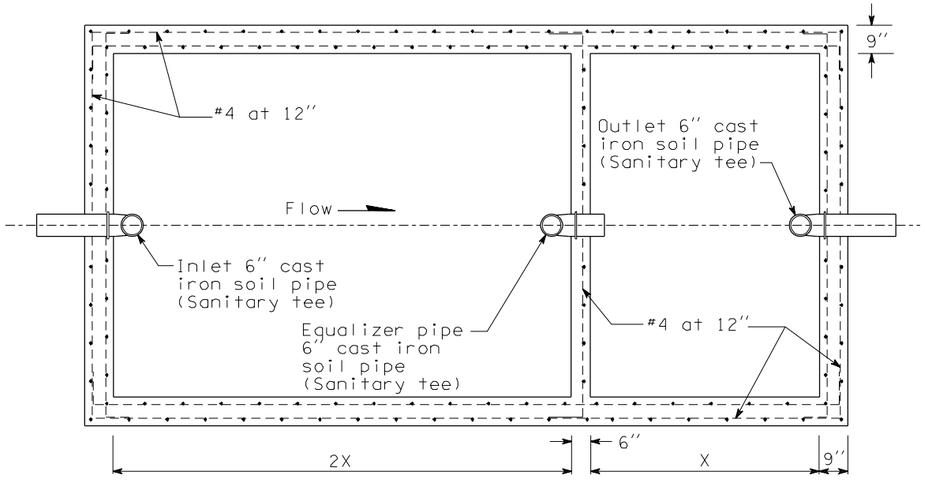

SECTION B-B

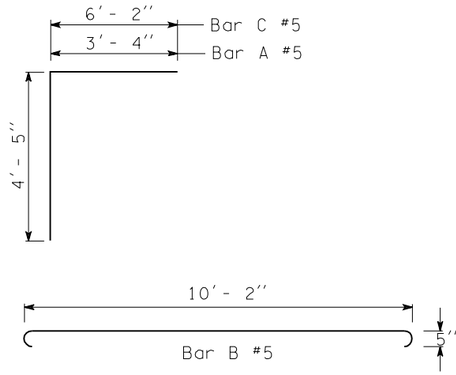

BAR DETAILS

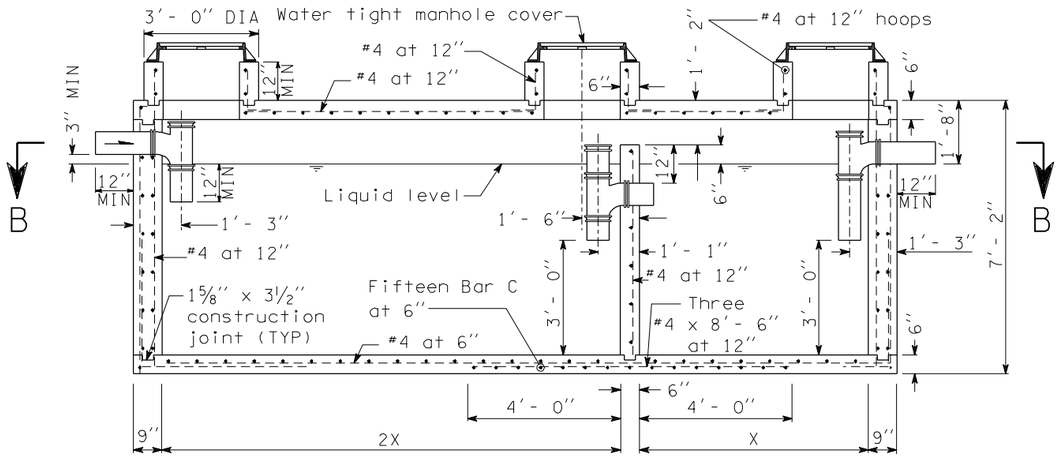

LONGITUDINAL SECTION

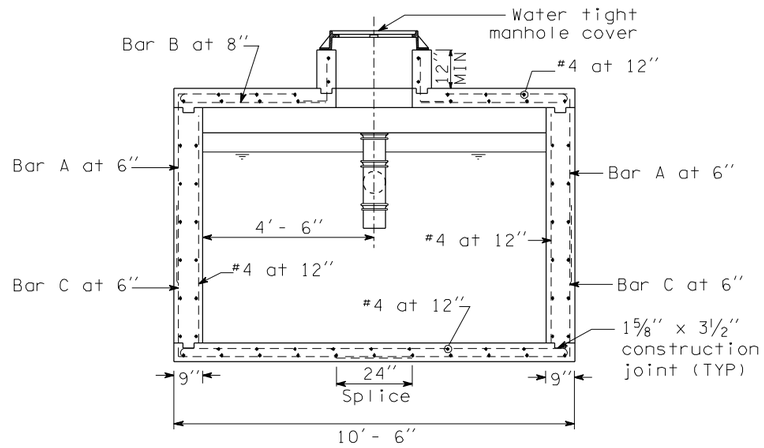

SECTION A-A

REST AREA SEPTIC TANK

MATTHEW J. WITECKI
STATE OF WASHINGTON
15588
REGISTERED
PROFESSIONAL ENGINEER
EXPIRES JUNE 30, 1997

NOTE: THIS PLAN IS NOT A LEGAL ENGINEERING DOCUMENT BUT AN ELECTRONIC DUPLICATE. THE ORIGINAL, SIGNED BY THE ENGINEER AND APPROVED FOR PUBLICATION, IS KEPT ON FILE AT THE WASHINGTON STATE DEPARTMENT OF TRANSPORTATION. A COPY MAY BE OBTAINED UPON REQUEST.

STANDARD PLAN I-1

APPROVED FOR PUBLICATION

Clifford E. Mansfield — 07/18/97

STATE DESIGN ENGINEER — DATE

WASHINGTON STATE DEPARTMENT OF TRANSPORTATION
OLYMPIA, WASHINGTON

EFFECTIVE: APRIL 2, 2007 TO JANUARY 6, 2008

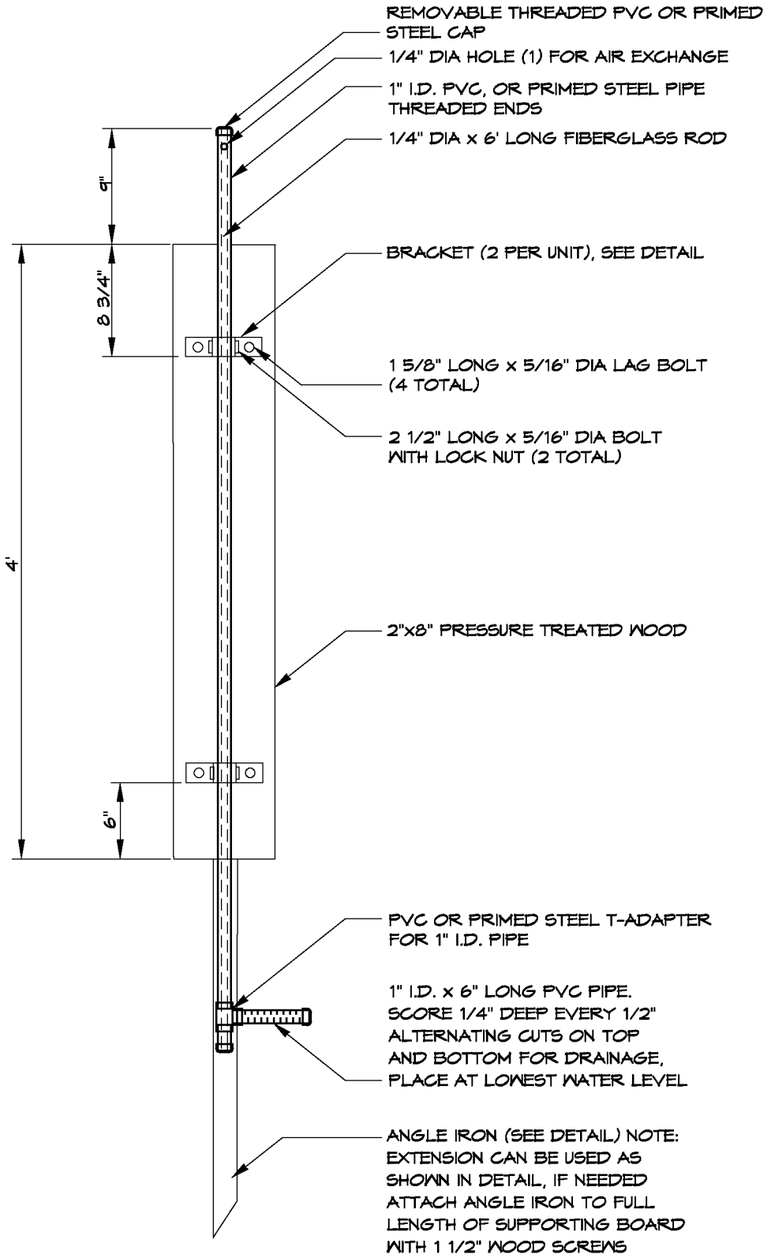

CREST GAGE
NOT TO SCALE

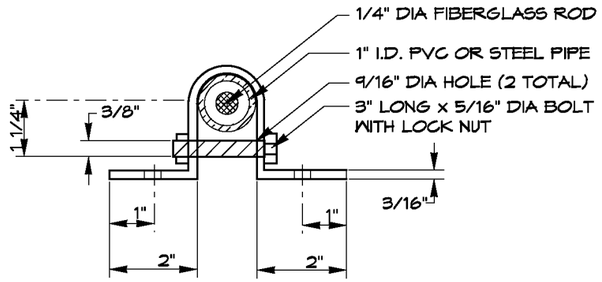

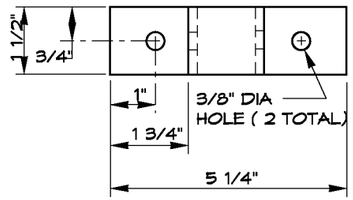

BRACKET (2 PER UNIT)
NOT TO SCALE

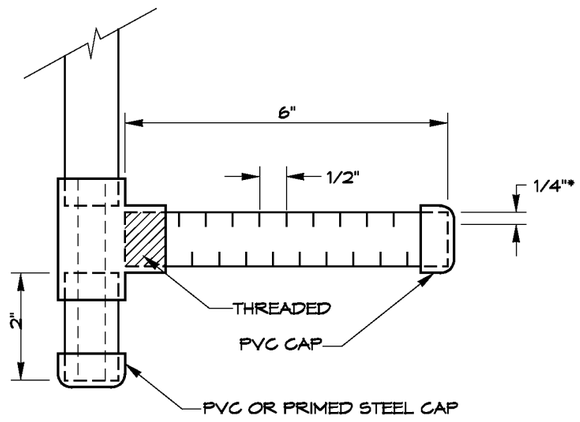

* REFERS TO DRAINAGE CUTS ON TOP AND BOTTOM OF PIPE

WATER INTAKE & CLEAN-OUT ASSEMBLY
NOT TO SCALE

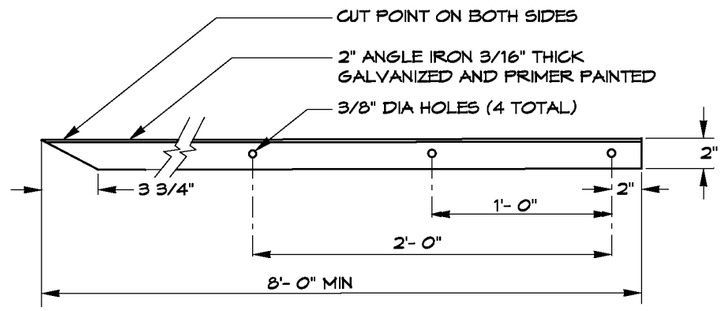

ANGLE IRON
NOT TO SCALE

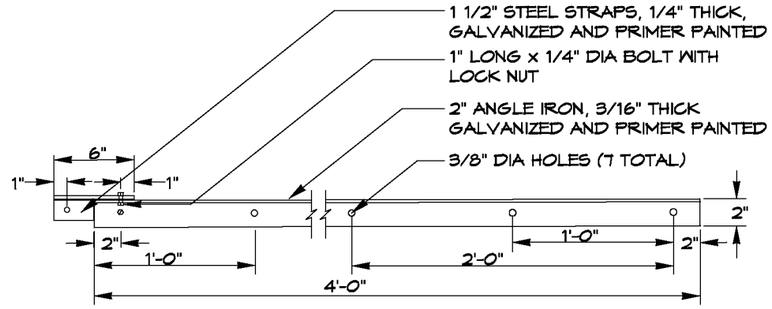

ANGLE IRON EXTENSION
NOT TO SCALE

NOTE: POUR IN APPROXIMATELY 1 TABLESPOON OF CORK DUST AT INSTALLATION AND AFTER EACH READING

NOTE: GAGE ASSEMBLY BACKING BOARD, PIPE, ROD, AND ANGLE IRON CAN BE EXTENDED AS NEEDED TO FIT SITE REQUIREMENTS.

STATE OF WASHINGTON
REGISTERED
LANDSCAPE ARCHITECT

MARK W. MAURER
CERTIFICATE NO. 000598

CREST GAGE

STANDARD PLAN I-2

NOTE: THIS PLAN IS NOT A LEGAL ENGINEERING DOCUMENT BUT AN ELECTRONIC DUPLICATE. THE ORIGINAL, SIGNED BY THE ENGINEER AND APPROVED FOR PUBLICATION, IS KEPT ON FILE AT THE WASHINGTON STATE DEPARTMENT OF TRANSPORTATION. A COPY MAY BE OBTAINED UPON REQUEST.

APPROVED FOR PUBLICATION

Brian Ziegler — **04-23-99**

DEPUTY STATE DESIGN ENGINEER — DATE

WASHINGTON STATE DEPARTMENT OF TRANSPORTATION
OLYMPIA, WASHINGTON

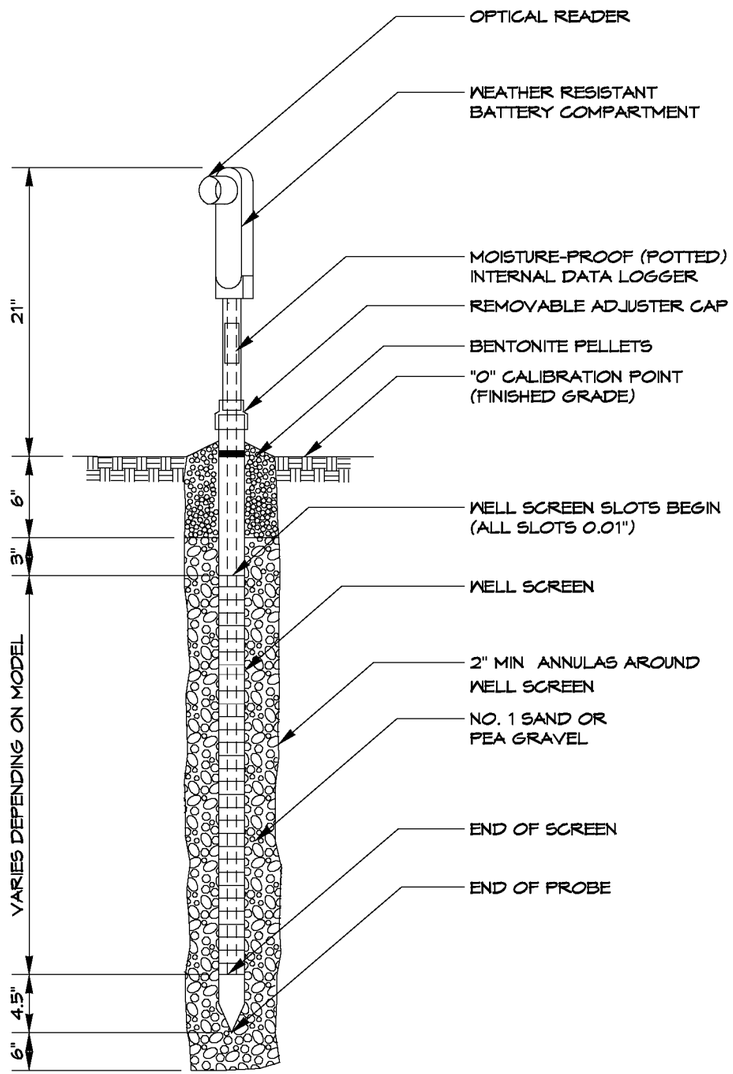

AUTOMATED GROUND WATER
MONITORING WELL
NOT TO SCALE

STATE OF
WASHINGTON
REGISTERED
LANDSCAPE ARCHITECT

MARK W. MAURER
CERTIFICATE NO. 000598

AUTOMATED GROUND WATER MONITORING WELL

STANDARD PLAN I-3

NOTE: THIS PLAN IS NOT A LEGAL ENGINEERING DOCUMENT BUT AN ELECTRONIC DUPLICATE. THE ORIGINAL, SIGNED BY THE ENGINEER AND APPROVED FOR PUBLICATION, IS KEPT ON FILE AT THE WASHINGTON STATE DEPARTMENT OF TRANSPORTATION. A COPY MAY BE OBTAINED UPON REQUEST.

APPROVED FOR PUBLICATION

Clifford E. Mansfield *08-20-99*

DEPUTY STATE DESIGN ENGINEER — DATE

WASHINGTON STATE DEPARTMENT OF TRANSPORTATION
OLYMPIA, WASHINGTON

EFFECTIVE: APRIL 2, 2007 TO JANUARY 6, 2008

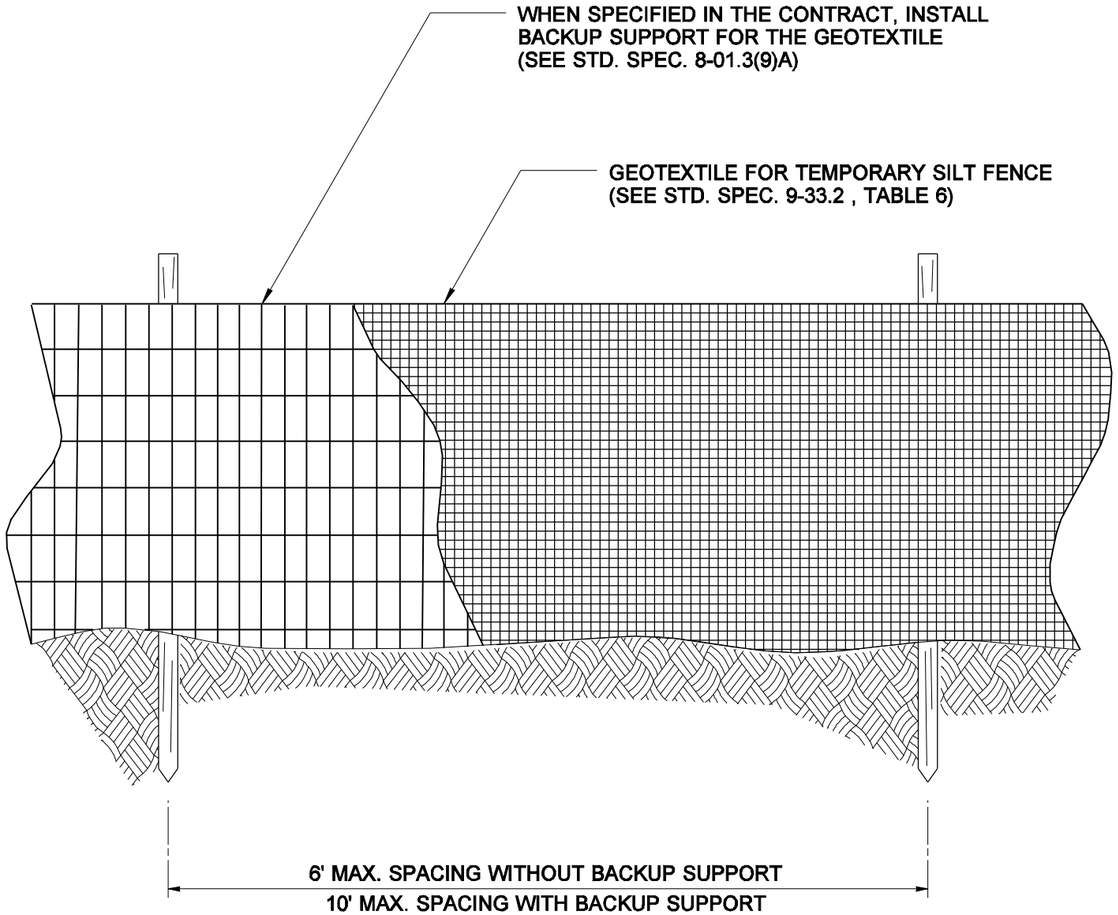

ELEVATION VIEW

NOTES

1. MAXIMIZE DETENTION OF STORMWATER BY PLACING FENCE AS FAR AWAY FROM THE TOE OF SLOPE AS POSSIBLE WITHOUT ENCROACHING ON SENSITIVE AREAS OR OUTSIDE OF THE CLEARING BOUNDARIES.
2. INSTALL SILT FENCING ALONG CONTOURS WHENEVER POSSIBLE.
3. INSTALL THE ENDS OF THE SILT FENCE TO POINT SLIGHTLY UP-SLOPE TO PREVENT SEDIMENT FROM FLOWING AROUND THE ENDS OF THE FENCE.
4. PERFORM MAINTENANCE IN ACCORDANCE WITH STANDARD SPECIFICATIONS 8-01.3(9)A AND 8-01.3(15).

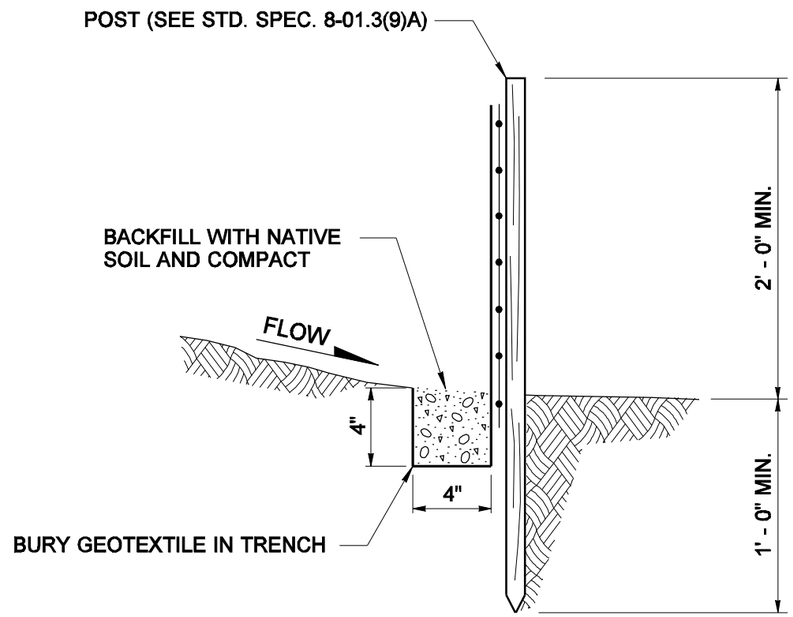

SIDE VIEW

STATE OF WASHINGTON
REGISTERED
LANDSCAPE ARCHITECT

MARK W. MAURER
CERTIFICATE NO. 000598

NOTE: THIS PLAN IS NOT A LEGAL ENGINEERING DOCUMENT BUT AN ELECTRONIC DUPLICATE. THE ORIGINAL, SIGNED BY THE ENGINEER AND APPROVED FOR PUBLICATION, IS KEPT ON FILE AT THE WASHINGTON STATE DEPARTMENT OF TRANSPORTATION. A COPY MAY BE OBTAINED UPON REQUEST.

SILT FENCE

STANDARD PLAN I-4

SHEET 1 OF 1 SHEET

APPROVED FOR PUBLICATION

Harold J. Peterfeso — STATE DESIGN ENGINEER
07-17-03 — DATE

Washington State Department of Transportation

EFFECTIVE: APRIL 2, 2007 TO JANUARY 6, 2008

EFFECTIVE: APRIL 2, 2007 TO JANUARY 6, 2008

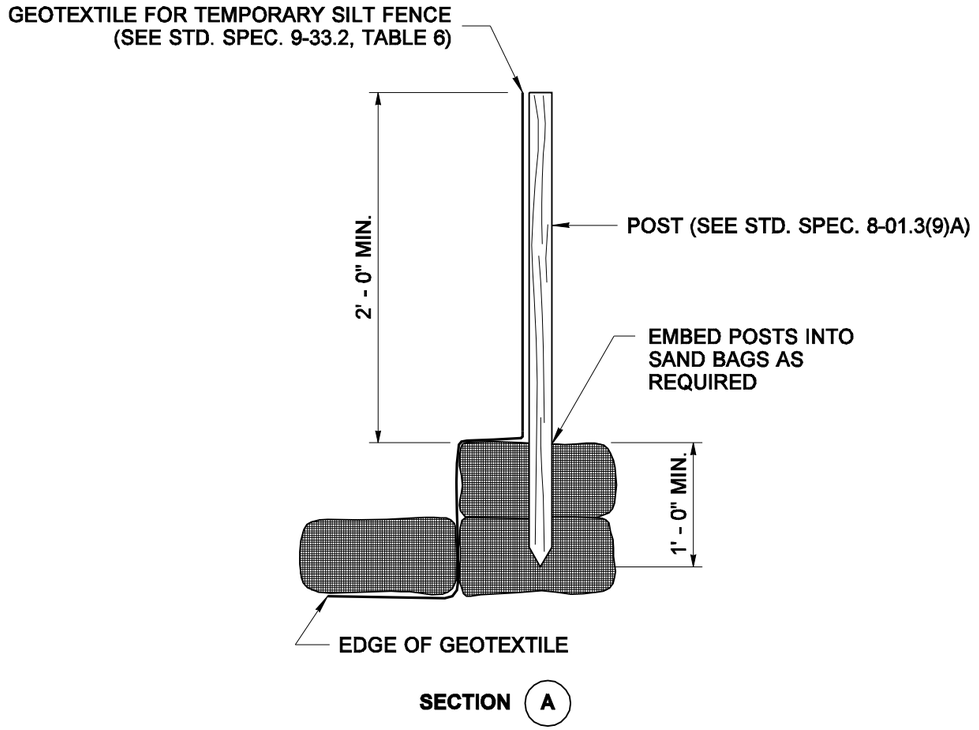

SECTION (A)

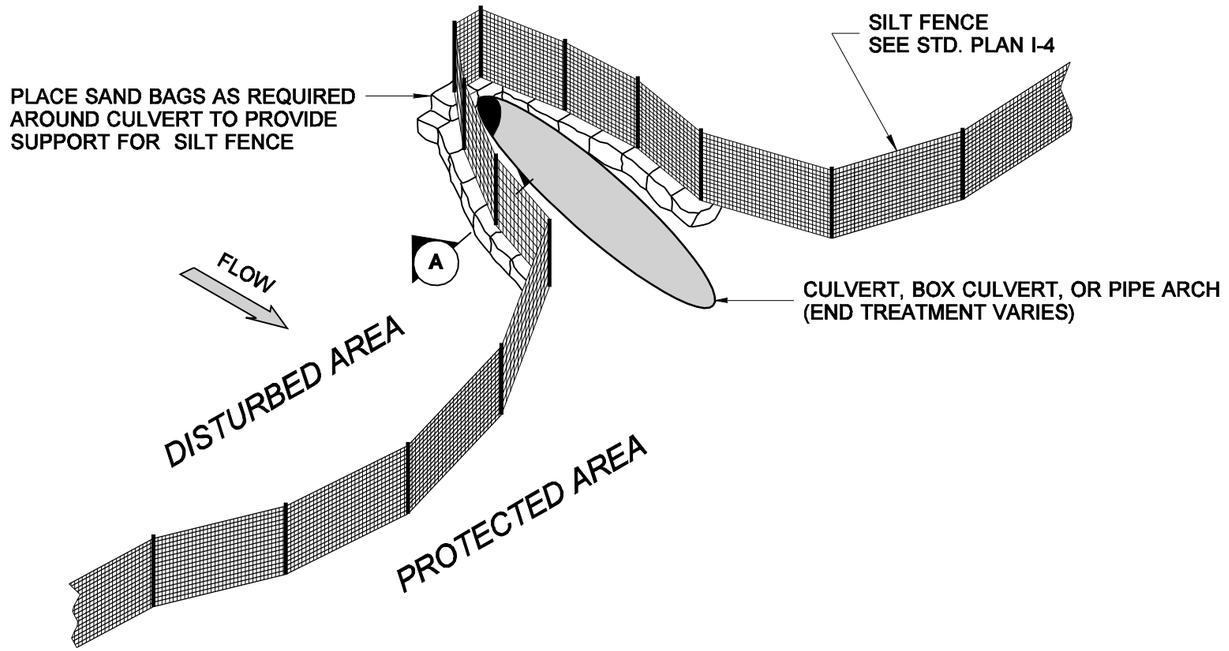

SILT FENCE DESIGN

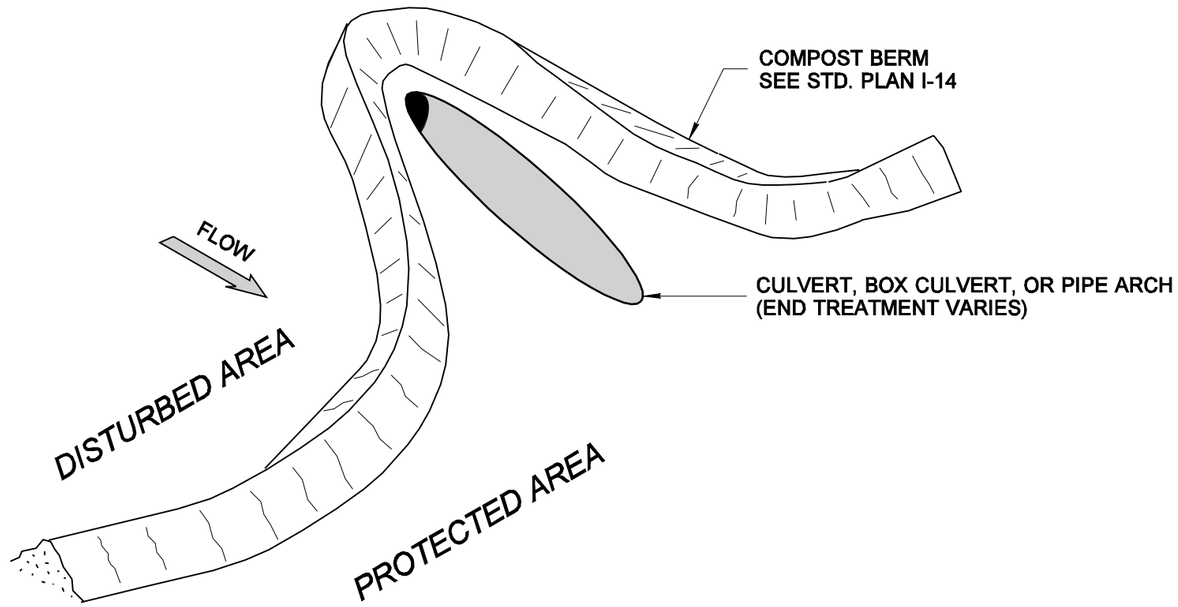

COMPOST BERM DESIGN

NOTE

PERFORM MAINTENANCE IN ACCORDANCE WITH STANDARD SPECIFICATIONS 8-01.3(9)A AND 8-01.3(15).

STATE OF
WASHINGTON
REGISTERED
LANDSCAPE ARCHITECT

MARK W. MAURER
CERTIFICATE NO. 000598

NOTE: THIS PLAN IS NOT A LEGAL ENGINEERING DOCUMENT BUT AN ELECTRONIC DUPLICATE. THE ORIGINAL, SIGNED BY THE ENGINEER AND APPROVED FOR PUBLICATION, IS KEPT ON FILE AT THE WASHINGTON STATE DEPARTMENT OF TRANSPORTATION. A COPY MAY BE OBTAINED UPON REQUEST.

EROSION CONTROL AT CULVERT ENDS

STANDARD PLAN I-5

SHEET 1 OF 1 SHEET

APPROVED FOR PUBLICATION

Harold J. Peterfeso — STATE DESIGN ENGINEER — *07-17-03* — DATE

Washington State Department of Transportation

EFFECTIVE: APRIL 2, 2007 TO JANUARY 6, 2008

EFFECTIVE: APRIL 2, 2007 TO JANUARY 6, 2008

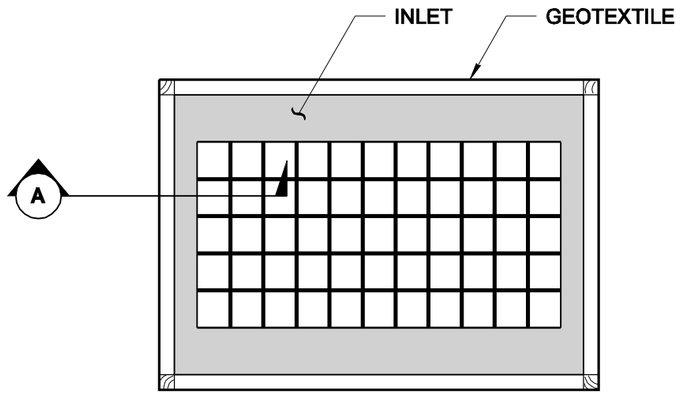

PLAN VIEW
(CROSS BRACES NOT SHOWN)

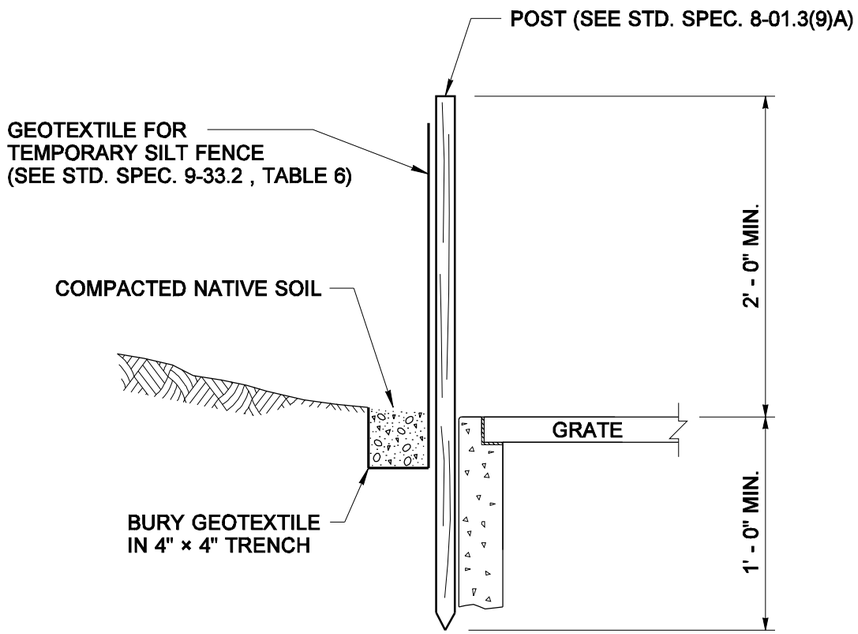

SECTION (A)

NOTES

1. PREFABRICATED UNITS MAY BE USED IN LIEU OF THE DESIGN SHOWN ON THIS PLAN UPON APPROVAL OF THE ENGINEER.
2. STRUCTURE SHALL BE CONSTRUCTED SUCH THAT GEOTEXTILE MATERIAL SHALL BE FASTENED TO POSTS CREATING A SEAMLESS JOINT.
3. ENSURE THAT PONDING HEIGHT OF WATER DOES NOT CAUSE FLOODING ON ADJACENT ROADWAYS OR PRIVATE PROPERTY.
4. PERFORM MAINTENANCE IN ACCORDANCE WITH STANDARD SPECIFICATION 8-01.3(15).

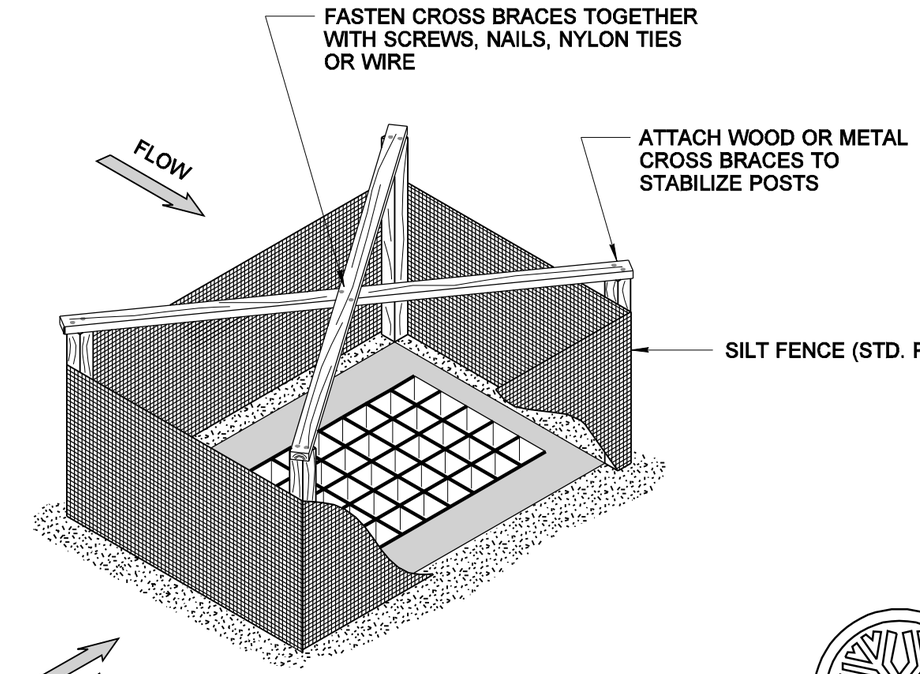

ISOMETRIC VIEW
(ENTIRE FENCE NOT SHOWN
FOR ILLUSTRATIVE PURPOSES)

STATE OF
WASHINGTON
REGISTERED
LANDSCAPE ARCHITECT

MARK W. MAURER
CERTIFICATE NO. 000598

NOTE: THIS PLAN IS NOT A LEGAL ENGINEERING DOCUMENT BUT AN ELECTRONIC DUPLICATE. THE ORIGINAL, SIGNED BY THE ENGINEER AND APPROVED FOR PUBLICATION, IS KEPT ON FILE AT THE WASHINGTON STATE DEPARTMENT OF TRANSPORTATION. A COPY MAY BE OBTAINED UPON REQUEST.

TEMPORARY SILT FENCE FOR INLET PROTECTION IN UNPAVED AREAS

STANDARD PLAN I-6

SHEET 1 OF 1 SHEET

APPROVED FOR PUBLICATION

Harold J. Peterfeso — STATE DESIGN ENGINEER
07-17-03 — DATE

Washington State Department of Transportation

EFFECTIVE: APRIL 2, 2007 TO JANUARY 6, 2008

EFFECTIVE: APRIL 2, 2007 TO JANUARY 6, 2008

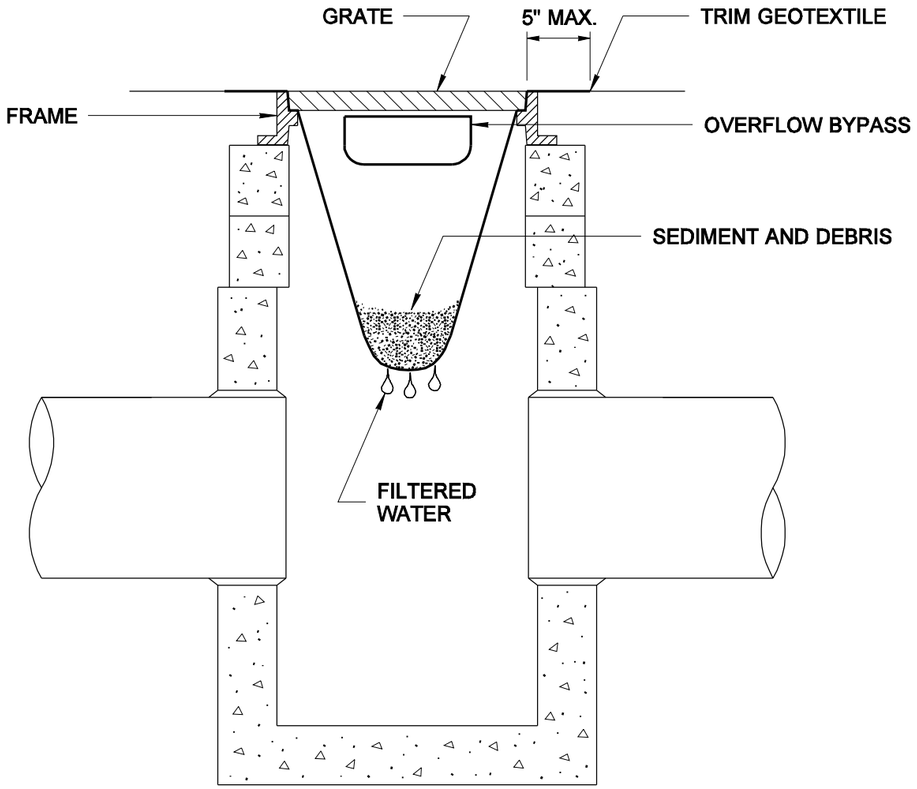

CROSS SECTION

NOT TO SCALE

NOTES

1. PERFORM MAINTENANCE IN ACCORDANCE WITH STANDARD SPECIFICATION 8-01.3(15).
2. SIZE THE BELOW GRATE INLET DEVICE (BGID) FOR THE STORM WATER STRUCTURE IT WILL SERVICE.
3. THE BGID SHALL HAVE A BUILT-IN HIGH-FLOW RELIEF SYSTEM (OVERFLOW BYPASS).
4. THE RETRIEVAL SYSTEM MUST ALLOW REMOVAL OF THE BGID WITHOUT SPILLING THE COLLECTED MATERIAL.

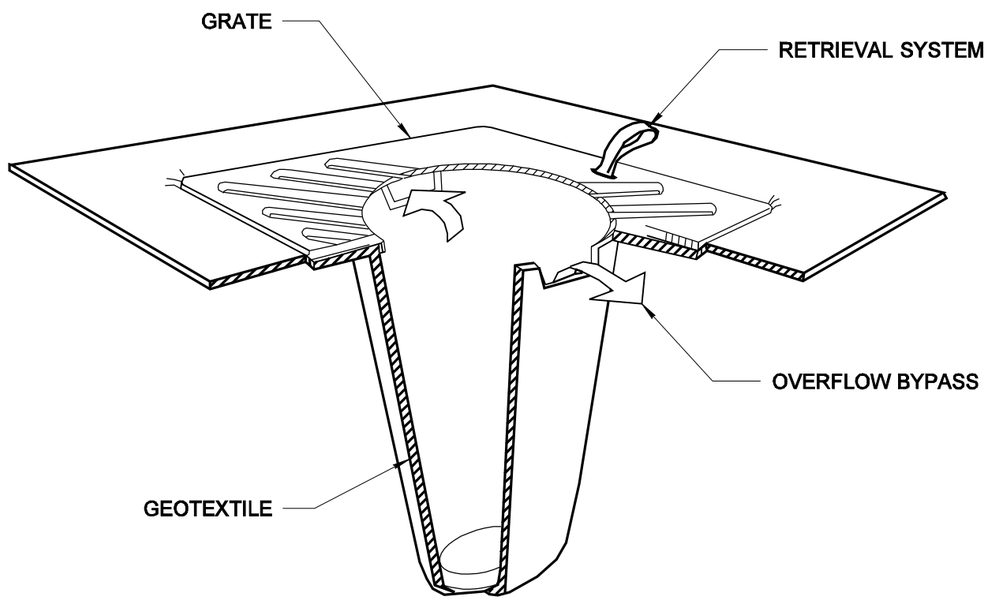

ISOMETRIC VIEW

NOT TO SCALE

PREFABRICATED BELOW GRATE INLET DEVICE DETAILS

STATE OF
WASHINGTON
REGISTERED
LANDSCAPE ARCHITECT

MARK W. MAURER
CERTIFICATE NO. 000598

NOTE: THIS PLAN IS NOT A LEGAL ENGINEERING DOCUMENT BUT AN ELECTRONIC DUPLICATE. THE ORIGINAL, SIGNED BY THE ENGINEER AND APPROVED FOR PUBLICATION, IS KEPT ON FILE AT THE WASHINGTON STATE DEPARTMENT OF TRANSPORTATION. A COPY MAY BE OBTAINED UPON REQUEST.

STORM DRAIN
INLET PROTECTION

STANDARD PLAN I-7

SHEET 1 OF 1 SHEET

APPROVED FOR PUBLICATION

Harold J. Peterfeso — STATE DESIGN ENGINEER
07-17-03 — DATE

Washington State Department of Transportation

EFFECTIVE: APRIL 2, 2007 TO JANUARY 6, 2008

EFFECTIVE: APRIL 2, 2007 TO JANUARY 6, 2008

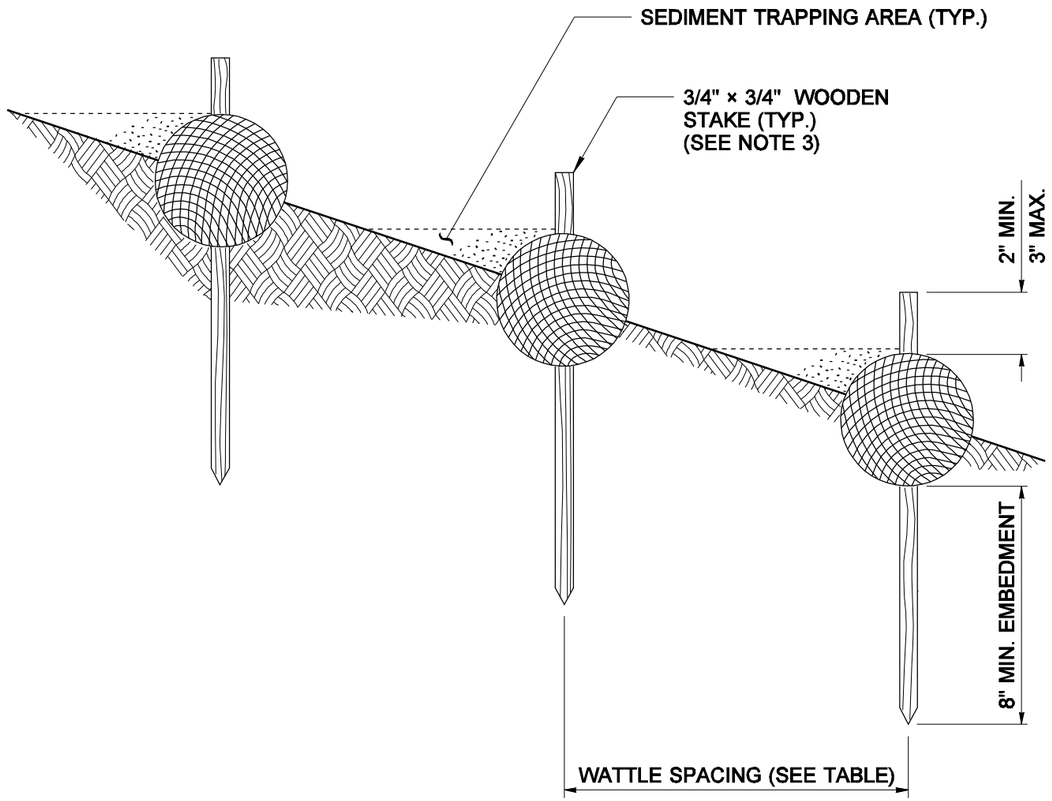

ELEVATION VIEW

WATTLE SPACING TABLE	
SLOPE	MAXIMUM SPACING
1:1	10 FEET
2:1	20 FEET
3:1	30 FEET
4:1	40 FEET

NOTES

1. INSTALL WATTLES ALONG CONTOURS (SEE STANDARD SPECIFICATION 8-01.3(10)).
2. WATTLES SHALL BE INSPECTED REGULARLY, AND IMMEDIATELY AFTER A RUNOFF PRODUCING RAINFALL, TO ENSURE THEY REMAIN THOROUGHLY ENTRENCHED AND IN CONTACT WITH THE SOIL.
3. LIVE STAKES MAY BE USED FOR PERMANENT INSTALLATIONS.
4. PERFORM MAINTENANCE IN ACCORDANCE WITH STANDARD SPECIFICATION 8-01.3(15).
5. INSTALL WATTLES SNUGLY INTO THE TRENCH. ABUT ADJACENT WATTLES TIGHTLY, END TO END, WITHOUT OVERLAPPING THE ENDS.
6. PILOT HOLES MAY BE DRIVEN THROUGH THE WATTLE AND INTO THE SOIL, WHEN SOIL CONDITIONS REQUIRE.

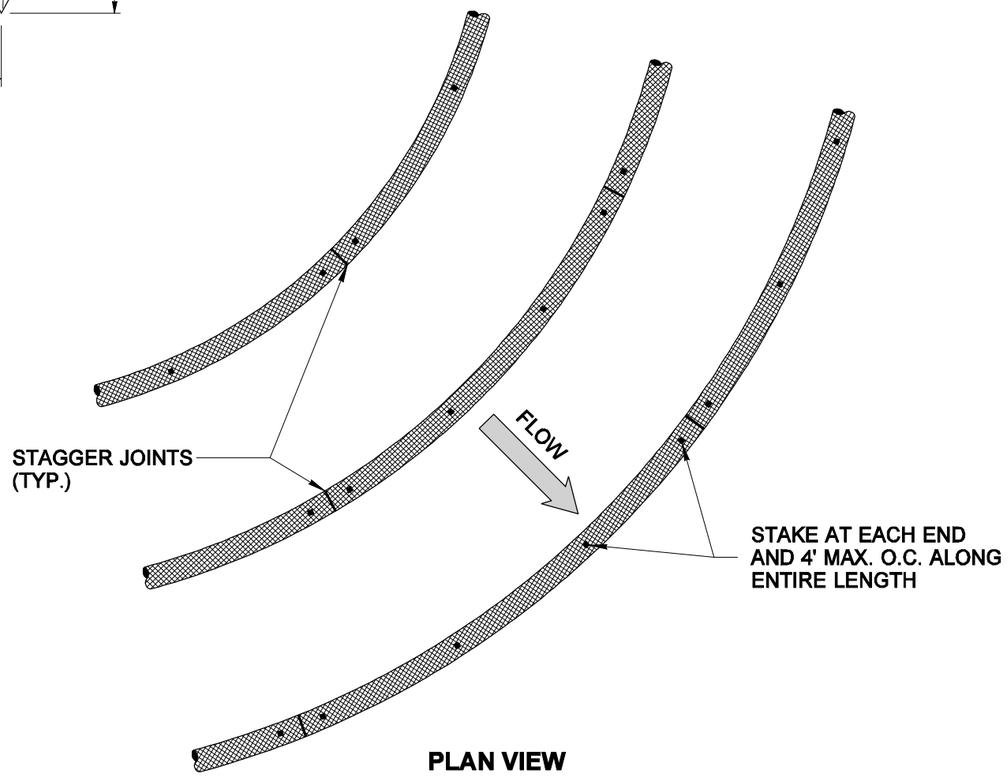

PLAN VIEW

STATE OF WASHINGTON
REGISTERED
LANDSCAPE ARCHITECT

MARK W. MAURER
CERTIFICATE NO. 000598

NOTE: THIS PLAN IS NOT A LEGAL ENGINEERING DOCUMENT BUT AN ELECTRONIC DUPLICATE. THE ORIGINAL, SIGNED BY THE ENGINEER AND APPROVED FOR PUBLICATION, IS KEPT ON FILE AT THE WASHINGTON STATE DEPARTMENT OF TRANSPORTATION. A COPY MAY BE OBTAINED UPON REQUEST.

WATTLE INSTALLATION ON SLOPE

STANDARD PLAN I-8

SHEET 1 OF 1 SHEET

APPROVED FOR PUBLICATION

Harold J. Peterfeso — STATE DESIGN ENGINEER
07-17-03 — DATE

Washington State Department of Transportation

EFFECTIVE: APRIL 2, 2007 TO JANUARY 6, 2008

EFFECTIVE: APRIL 2, 2007 TO JANUARY 6, 2008

EFFECTIVE: APRIL 2, 2007 TO JANUARY 6, 2008

DRAWN BY: MARK SUJKA

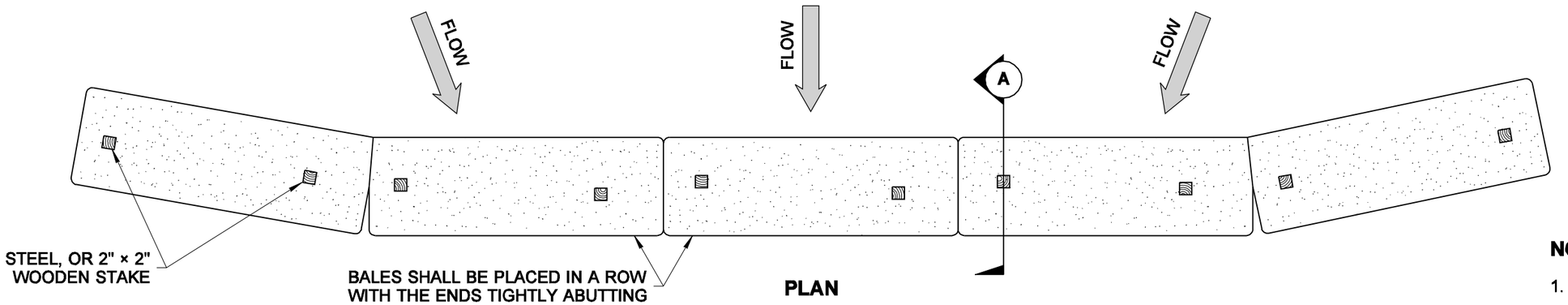

PLAN

NOTES

1. SEE STANDARD SPECIFICATION 8-01.3(9)D, FOR ADDITIONAL INFORMATION.
2. PERFORM MAINTENANCE IN ACCORDANCE WITH STANDARD SPECIFICATION 8-01.3(15).

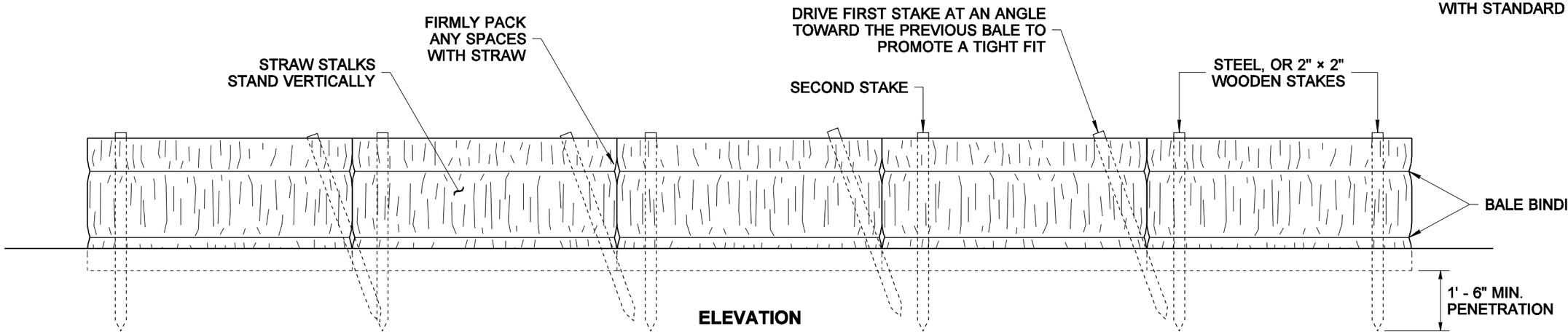

ELEVATION

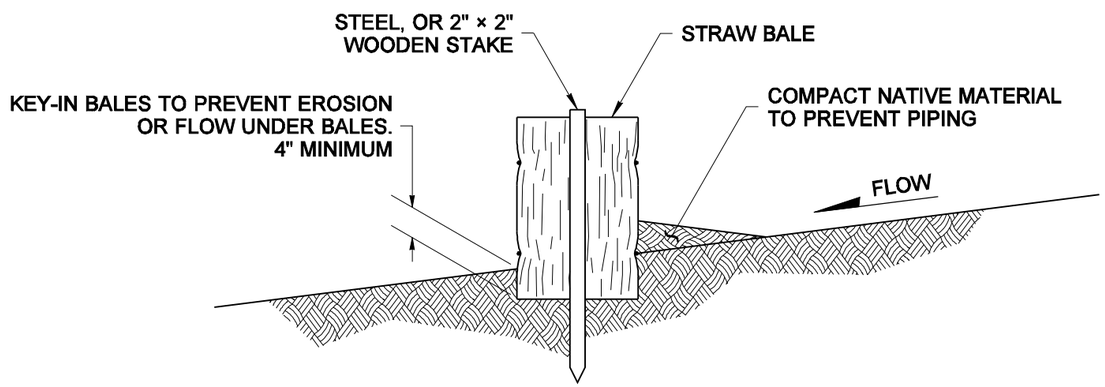

SECTION (A)

STATE OF WASHINGTON
REGISTERED
LANDSCAPE ARCHITECT

MARK W. MAURER
CERTIFICATE NO. 000598

NOTE: THIS PLAN IS NOT A LEGAL ENGINEERING DOCUMENT BUT AN ELECTRONIC DUPLICATE. THE ORIGINAL, SIGNED BY THE ENGINEER AND APPROVED FOR PUBLICATION, IS KEPT ON FILE AT THE WASHINGTON STATE DEPARTMENT OF TRANSPORTATION. A COPY MAY BE OBTAINED UPON REQUEST.

STRAW BALE BARRIER

STANDARD PLAN I-9

SHEET 1 OF 1 SHEET

APPROVED FOR PUBLICATION

Harold J. Peterfeso — STATE DESIGN ENGINEER

07-17-03 — DATE

Washington State Department of Transportation

EFFECTIVE: APRIL 2, 2007 TO JANUARY 6, 2008

EFFECTIVE: APRIL 2, 2007 TO JANUARY 6, 2008

EFFECTIVE: APRIL 2, 2007 TO JANUARY 6, 2008

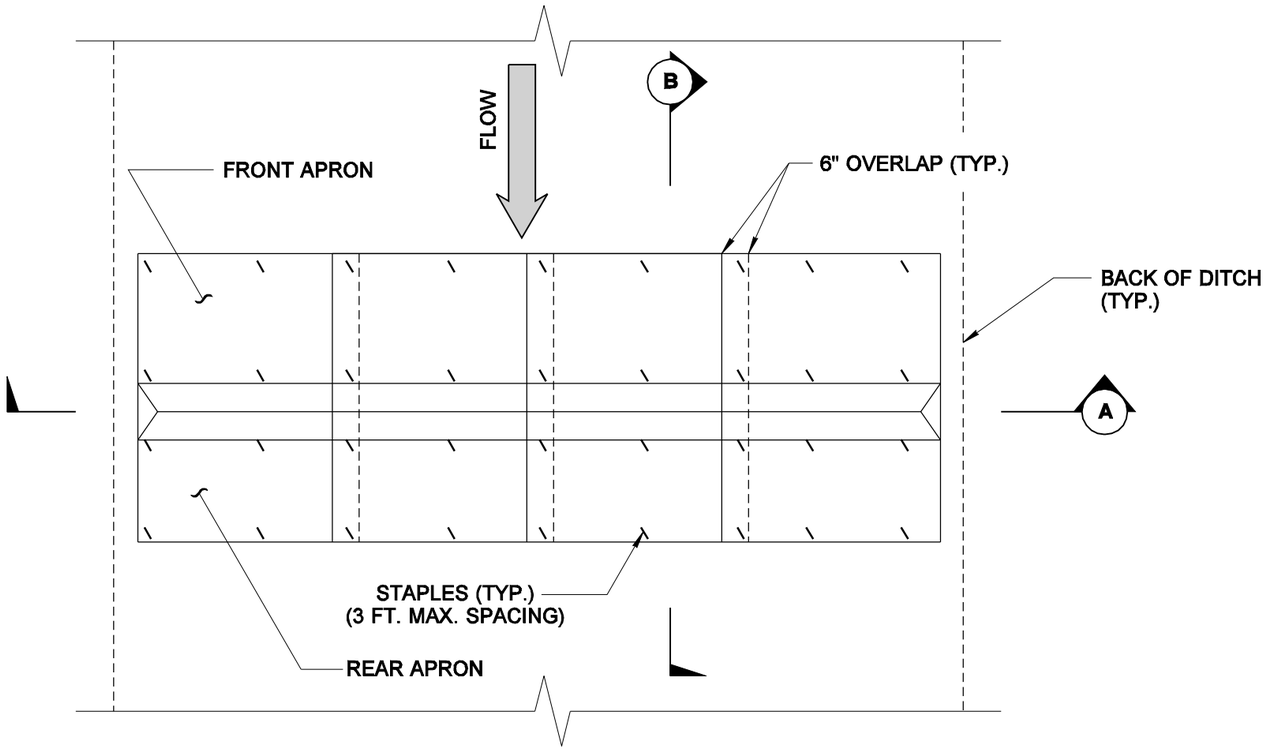

PLAN VIEW

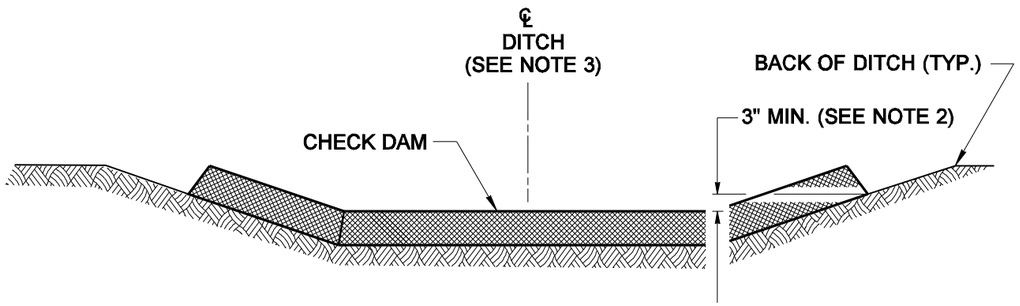

SECTION (A)

NOTES

1. GEOTEXTILE ENCASED CHECK DAMS SHALL MEET THE REQUIREMENTS OF STANDARD SPECIFICATIONS 8-01.3(5)A AND 9-14.5(4).
2. INSTALL THE SLOPED ENDS OF THE CHECK DAM A MINIMUM OF 3" HIGHER THAN THE TOP OF THE CHECK DAM IN THE CHANNEL TO ENSURE THAT WATER FLOWS OVER THE DAM AND NOT AROUND IT.
3. FLAT BOTTOM DITCH DESIGN SHOWN, CHECK DAM INSTALLATION DETAILS ARE SIMILAR FOR "V" BOTTOM DITCHES.
4. PERFORM MAINTENANCE IN ACCORDANCE WITH STANDARD SPECIFICATION 8-01.3(15).

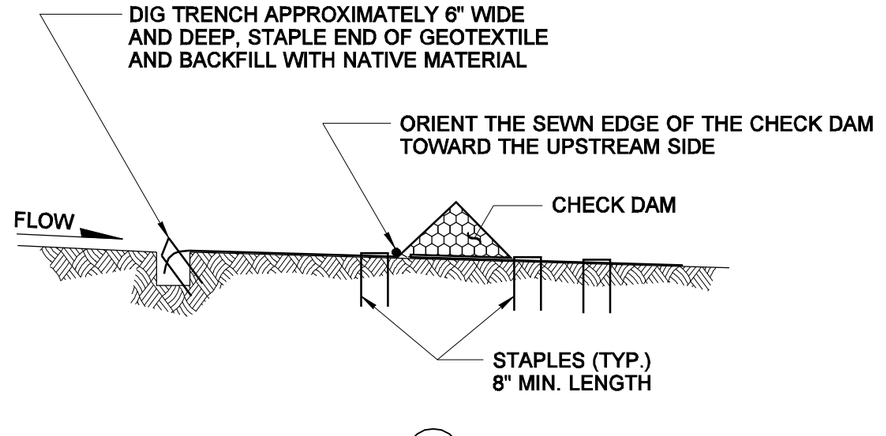

SECTION (B)

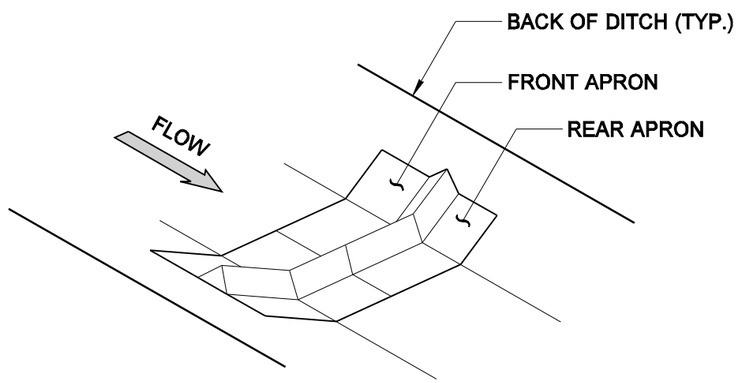

ISOMETRIC VIEW

STATE OF
WASHINGTON
REGISTERED
LANDSCAPE ARCHITECT

MARK W. MAURER
CERTIFICATE NO. 000598

NOTE: THIS PLAN IS NOT A LEGAL ENGINEERING DOCUMENT BUT AN ELECTRONIC DUPLICATE. THE ORIGINAL, SIGNED BY THE ENGINEER AND APPROVED FOR PUBLICATION, IS KEPT ON FILE AT THE WASHINGTON STATE DEPARTMENT OF TRANSPORTATION. A COPY MAY BE OBTAINED UPON REQUEST.

GEOTEXTILE ENCASED CHECK DAM INSTALLATION

STANDARD PLAN I-10

SHEET 1 OF 1 SHEET

APPROVED FOR PUBLICATION

Harold J. Peterfeso — STATE DESIGN ENGINEER — *07-17-03* — DATE

Washington State Department of Transportation

EFFECTIVE: APRIL 2, 2007 TO JANUARY 6, 2008

EFFECTIVE: APRIL 2, 2007 TO JANUARY 6, 2008

DRAWN BY: MARK SUJKA

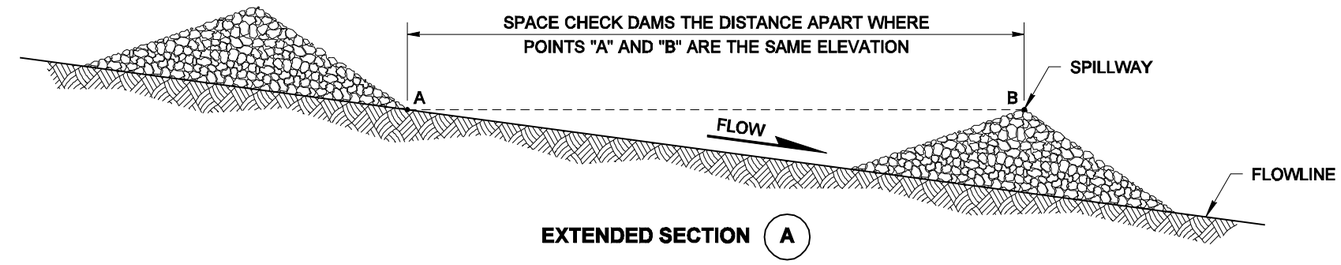

EXTENDED SECTION (A)

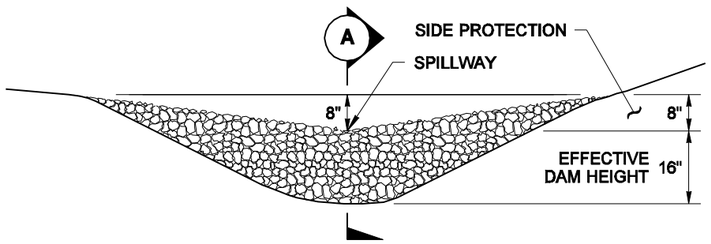

ELEVATION

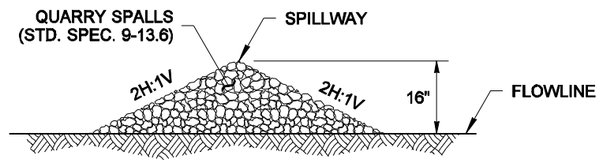

SECTION (A)

NOTE

ROCK CHECK DAMS SHALL BE PLACED OUTSIDE OF THE CLEAR ZONE, OR BEHIND TRAFFIC BARRIER.

ROCK CHECK DAM

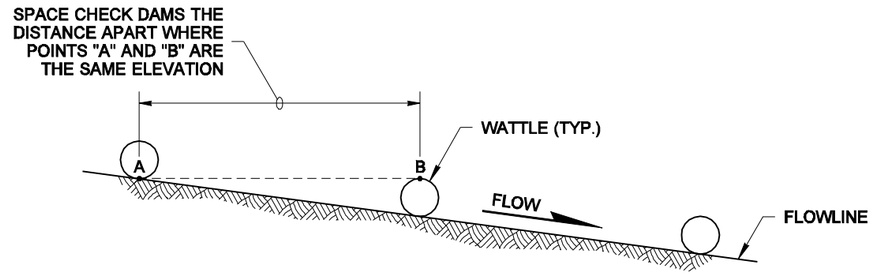

EXTENDED SECTION (C)

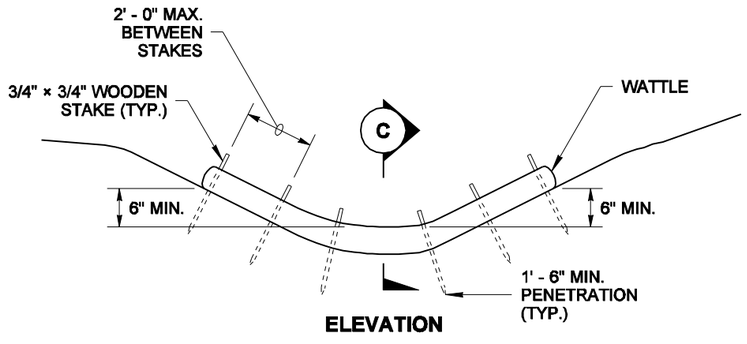

ELEVATION

WATTLE CHECK DAM

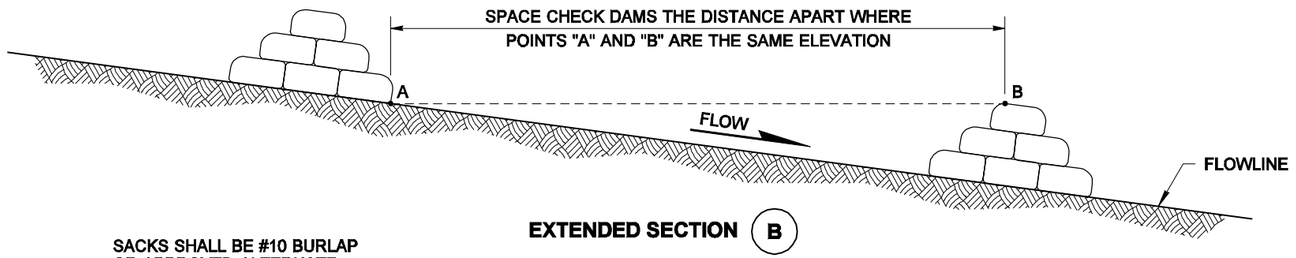

EXTENDED SECTION (B)

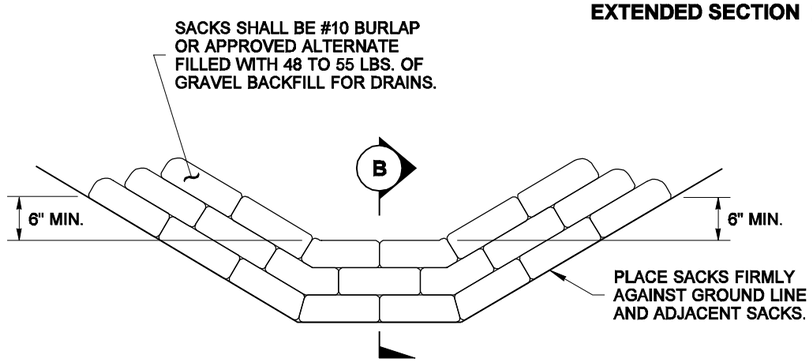

ELEVATION

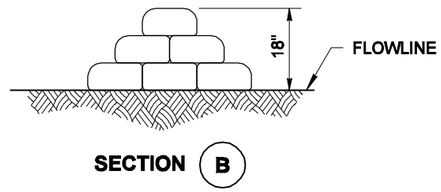

SECTION (B)

SANDBAG CHECK DAM

STATE OF
WASHINGTON
REGISTERED
LANDSCAPE ARCHITECT

MARK W. MAURER
CERTIFICATE NO. 000598

NOTE: THIS PLAN IS NOT A LEGAL ENGINEERING DOCUMENT BUT AN ELECTRONIC DUPLICATE. THE ORIGINAL, SIGNED BY THE ENGINEER AND APPROVED FOR PUBLICATION, IS KEPT ON FILE AT THE WASHINGTON STATE DEPARTMENT OF TRANSPORTATION. A COPY MAY BE OBTAINED UPON REQUEST.

CHECK DAMS

STANDARD PLAN I-11

SHEET 1 OF 1 SHEET

APPROVED FOR PUBLICATION

Harold J. Peterfeso — STATE DESIGN ENGINEER

09-11-03 — DATE

Washington State Department of Transportation

EFFECTIVE: APRIL 2, 2007 TO JANUARY 6, 2008

EFFECTIVE: APRIL 2, 2007 TO JANUARY 6, 2008

DRAWN BY: MARK SUJKA

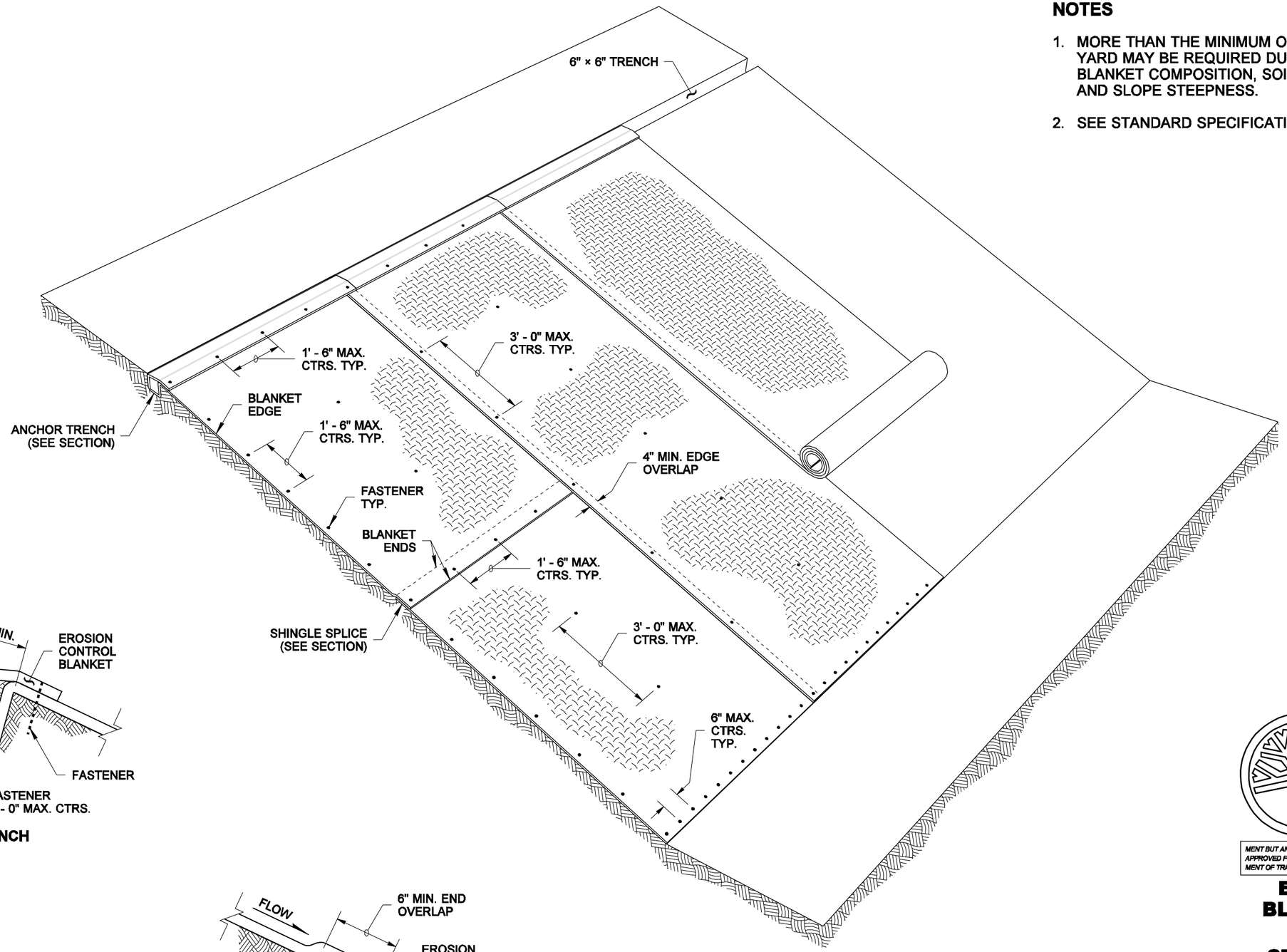

PERSPECTIVE VIEW

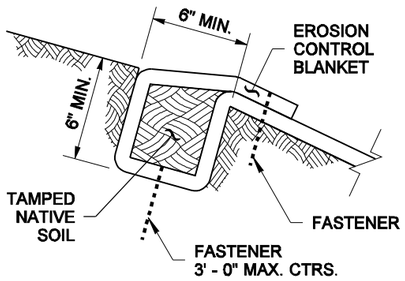

ANCHOR TRENCH
SECTION

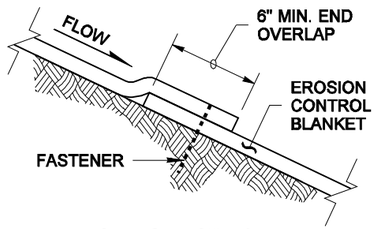

SHINGLE SPLICE
SECTION

NOTES

1. MORE THAN THE MINIMUM OF ONE FASTENER PER SQUARE YARD MAY BE REQUIRED DUE TO CONDITIONS SUCH AS BLANKET COMPOSITION, SOIL TYPE, SURFACE UNIFORMITY, AND SLOPE STEEPNESS.
2. SEE STANDARD SPECIFICATION 8-01.3(3).

STATE OF WASHINGTON REGISTERED LANDSCAPE ARCHITECT

MARK W. MAURER

CERTIFICATE NO. 000598

NOTE: THIS PLAN IS NOT A LEGAL ENGINEERING DOCUMENT BUT AN ELECTRONIC DUPLICATE. THE ORIGINAL, SIGNED BY THE ENGINEER AND APPROVED FOR PUBLICATION, IS KEPT ON FILE AT THE WASHINGTON STATE DEPARTMENT OF TRANSPORTATION. A COPY MAY BE OBTAINED UPON REQUEST.

EROSION CONTROL BLANKET PLACEMENT ON SLOPE

STANDARD PLAN I-12

SHEET 1 OF 1 SHEET

APPROVED FOR PUBLICATION

Harold J. Peterfeso — STATE DESIGN ENGINEER

07-17-03 — DATE

Washington State Department of Transportation

EFFECTIVE: APRIL 2, 2007 TO JANUARY 6, 2008

EFFECTIVE: APRIL 2, 2007 TO JANUARY 6, 2008

DRAWN BY: MARK SUJKA

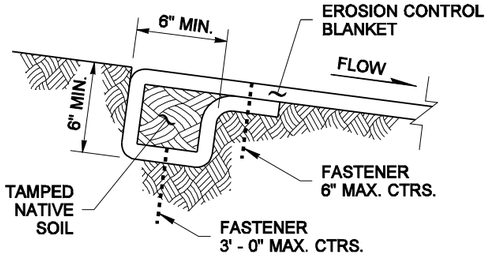

INITIAL ANCHOR SECTION

NOTES

1. MORE THAN THE MINIMUM OF ONE FASTENER PER SQUARE YARD MAY BE REQUIRED DUE TO CONDITIONS SUCH AS BLANKET COMPOSITION, SOIL TYPE, SURFACE UNIFORMITY, AND FLOW VELOCITY.
2. ROLL ENDS MAY BE SPLICED IN A CHECK SLOT.
3. SEE STANDARD SPECIFICATION 8-01.3(3).

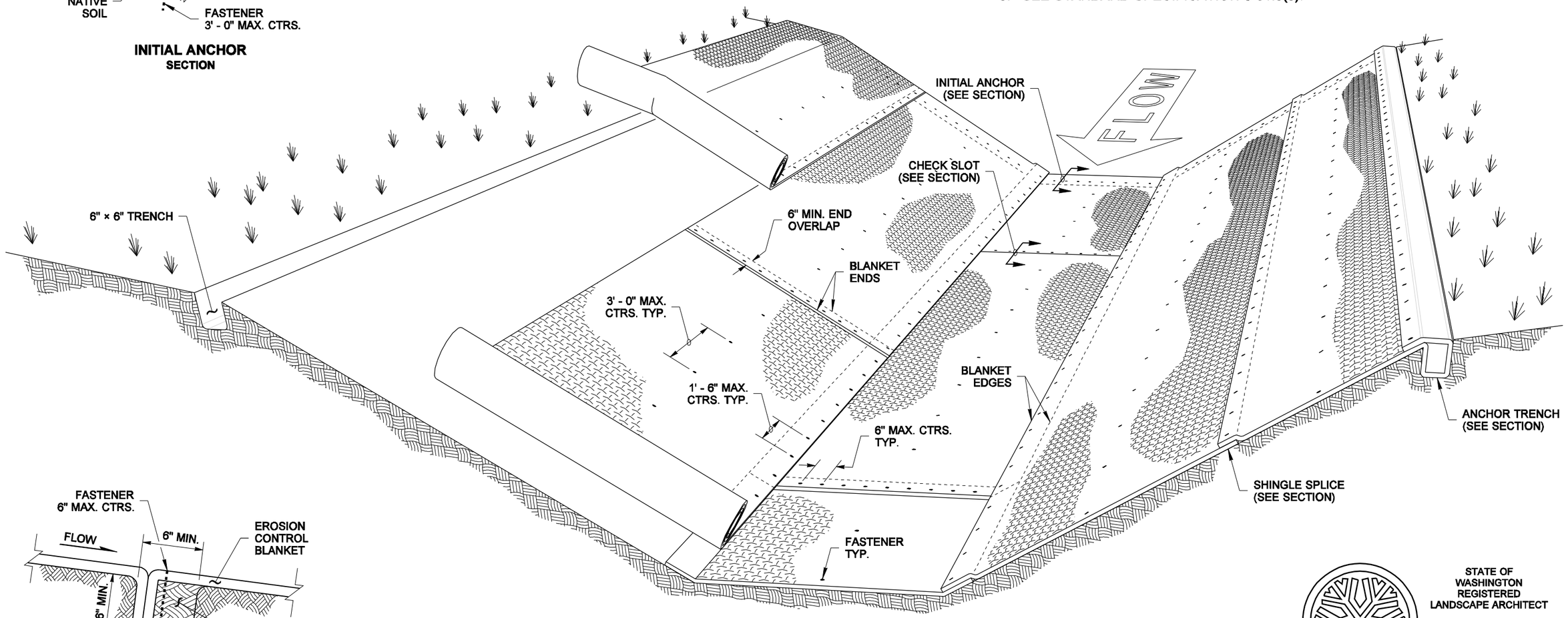

PERSPECTIVE VIEW

CHECK SLOT SECTION

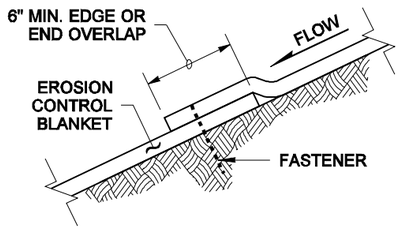

SHINGLE SPLICE SECTION

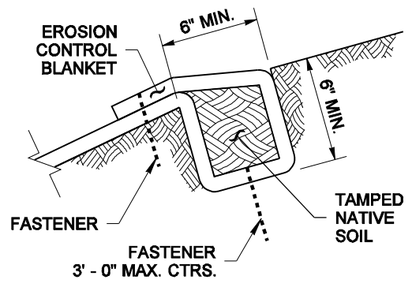

ANCHOR TRENCH SECTION

STATE OF WASHINGTON REGISTERED LANDSCAPE ARCHITECT

MARK W. MAURER

CERTIFICATE NO. 000598

NOTE: THIS PLAN IS NOT A LEGAL ENGINEERING DOCUMENT BUT AN ELECTRONIC DUPLICATE. THE ORIGINAL, SIGNED BY THE ENGINEER AND APPROVED FOR PUBLICATION, IS KEPT ON FILE AT THE WASHINGTON STATE DEPARTMENT OF TRANSPORTATION. A COPY MAY BE OBTAINED UPON REQUEST.

EROSION CONTROL BLANKET PLACEMENT IN CHANNEL

STANDARD PLAN I-13

SHEET 1 OF 1 SHEET

APPROVED FOR PUBLICATION

Harold J. Peterfeso — STATE DESIGN ENGINEER — *07-17-03* — DATE

Washington State Department of Transportation

EFFECTIVE: APRIL 2, 2007 TO JANUARY 6, 2008

EFFECTIVE: APRIL 2, 2007 TO JANUARY 6, 2008
EFFECTIVE: APRIL 2, 2007 TO JANUARY 6, 2008

DRAWN BY: MARK SUJKA

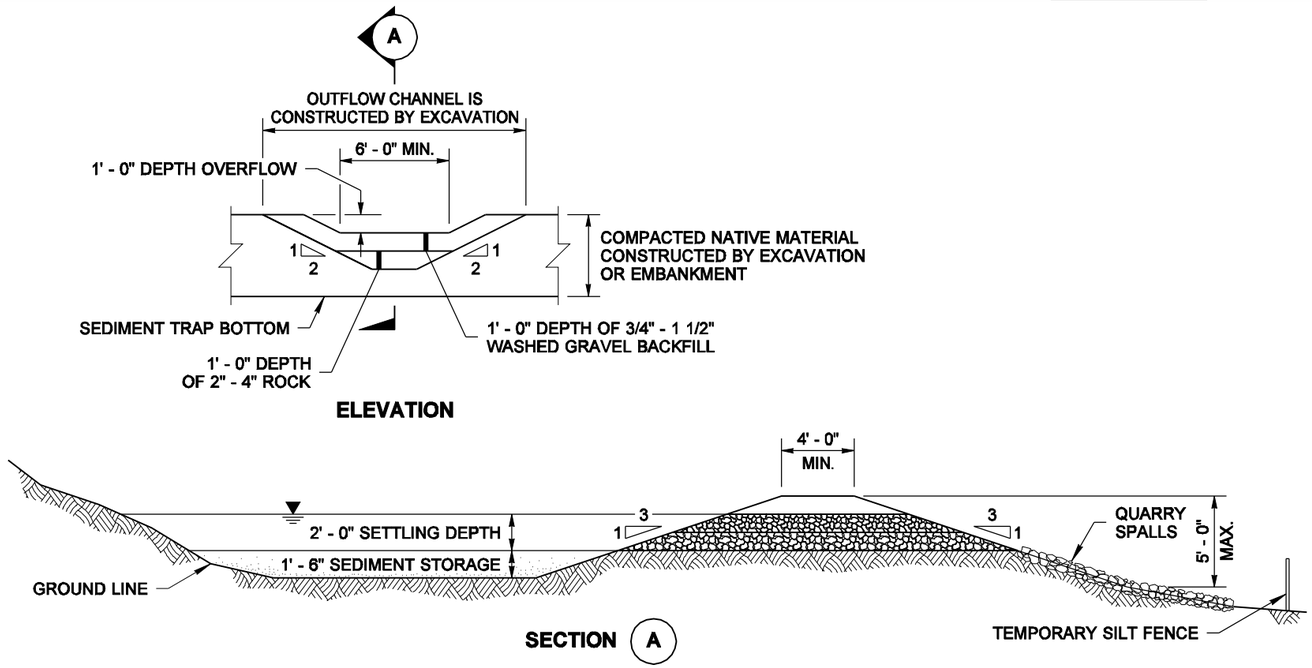

TEMPORARY SEDIMENT TRAP

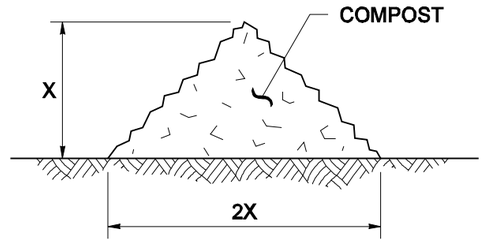

X = 1' - 0" FOR SLOPES 4H:1V OR FLATTER
X = 1' - 6" FOR SLOPES STEEPER THAN 4H:1V

SECTION VIEW

COMPOST BERM DETAIL

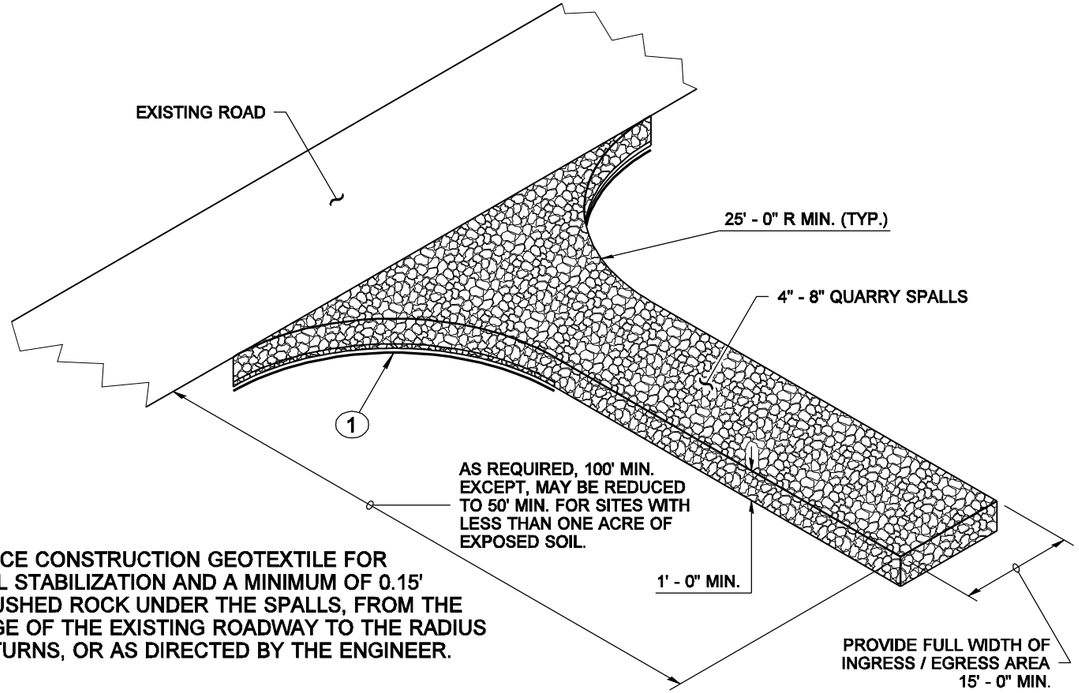

(1) PLACE CONSTRUCTION GEOTEXTILE FOR SOIL STABILIZATION AND A MINIMUM OF 0.15' CRUSHED ROCK UNDER THE SPALLS, FROM THE EDGE OF THE EXISTING ROADWAY TO THE RADIUS RETURNS, OR AS DIRECTED BY THE ENGINEER.

ISOMETRIC VIEW

STABILIZED CONSTRUCTION ENTRANCE

STATE OF WASHINGTON
REGISTERED
LANDSCAPE ARCHITECT

MARK W. MAURER
CERTIFICATE NO. 000598

NOTE: THIS PLAN IS NOT A LEGAL ENGINEERING DOCUMENT BUT AN ELECTRONIC DUPLICATE. THE ORIGINAL, SIGNED BY THE ENGINEER AND APPROVED FOR PUBLICATION, IS KEPT ON FILE AT THE WASHINGTON STATE DEPARTMENT OF TRANSPORTATION. A COPY MAY BE OBTAINED UPON REQUEST.

MISCELLANEOUS EROSION CONTROL DETAILS

STANDARD PLAN I-14

SHEET 1 OF 1 SHEET

APPROVED FOR PUBLICATION

Harold J. Peterfeso — STATE DESIGN ENGINEER
07-17-03 — DATE

Washington State Department of Transportation

EFFECTIVE: APRIL 2, 2007 TO JANUARY 6, 2008
EFFECTIVE: APRIL 2, 2007 TO JANUARY 6, 2008

EFFECTIVE: APRIL 2, 2007 TO JANUARY 6, 2008
EFFECTIVE: APRIL 2, 2007 TO JANUARY 6, 2008

DRAWN BY: BILL BERENS

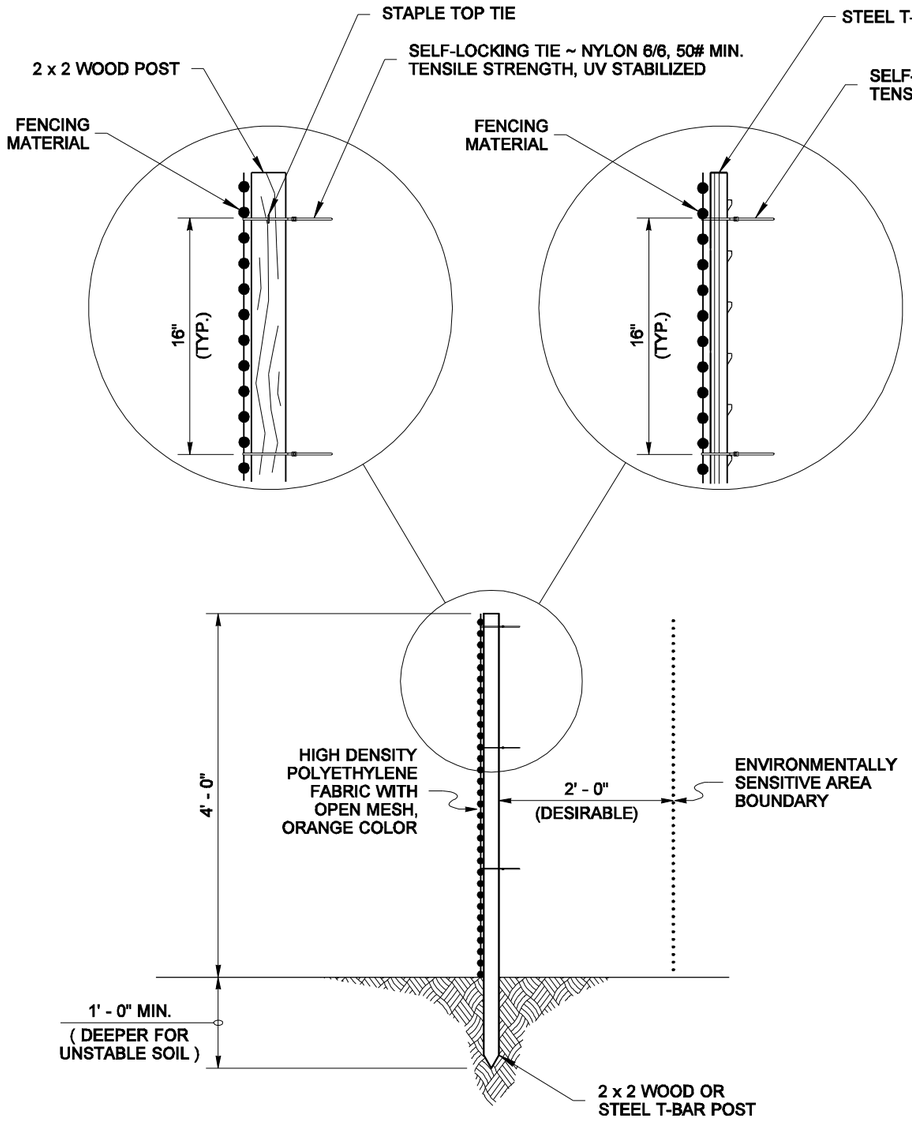

TYPICAL SECTION

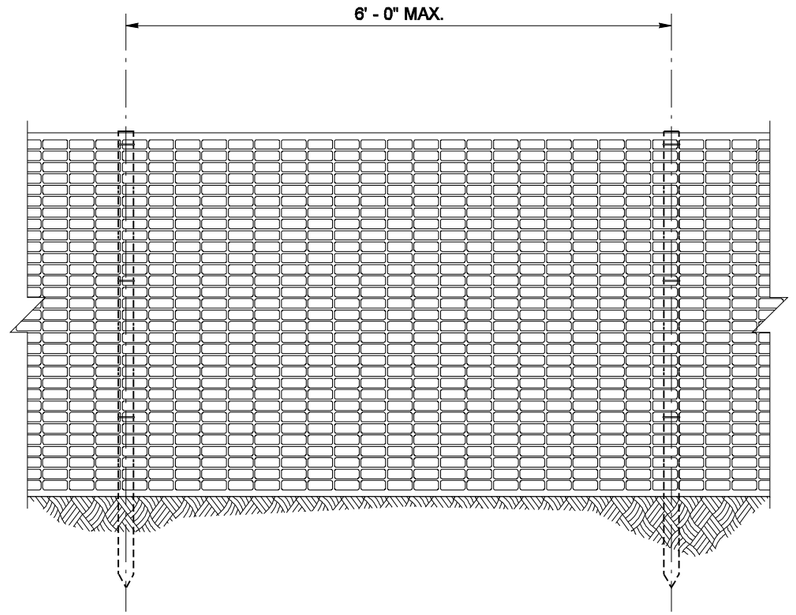

ELEVATION

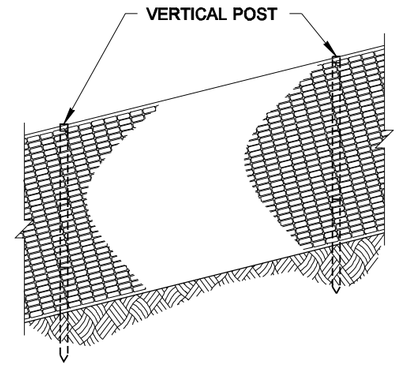

ELEVATION

FENCE ON SLOPE

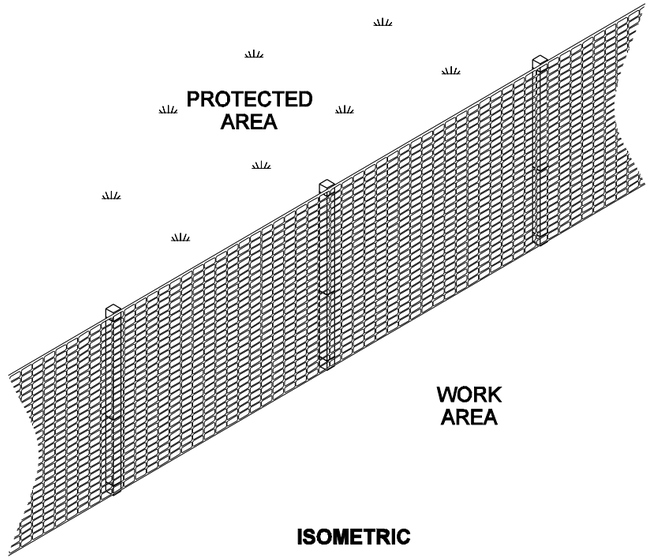

ISOMETRIC

KEN LEROY SMITH
STATE OF WASHINGTON
31805
REGISTERED
PROFESSIONAL ENGINEER

EXPIRES AUGUST 26, 2007

NOTE: THIS PLAN IS NOT A LEGAL ENGINEERING DOCUMENT BUT AN ELECTRONIC DUPLICATE. THE ORIGINAL, SIGNED BY THE ENGINEER AND APPROVED FOR PUBLICATION, IS KEPT ON FILE AT THE WASHINGTON STATE DEPARTMENT OF TRANSPORTATION. A COPY MAY BE OBTAINED UPON REQUEST.

HIGH VISIBILITY FENCE

STANDARD PLAN I-15

SHEET 1 OF 1 SHEET

APPROVED FOR PUBLICATION

Ken L. Smith — STATE DESIGN ENGINEER — *1-23-07* — DATE

Washington State Department of Transportation

EFFECTIVE: APRIL 2, 2007 TO JANUARY 6, 2008
EFFECTIVE: APRIL 2, 2007 TO JANUARY 6, 2008

EFFECTIVE: APRIL 2, 2007 TO JANUARY 6, 2008

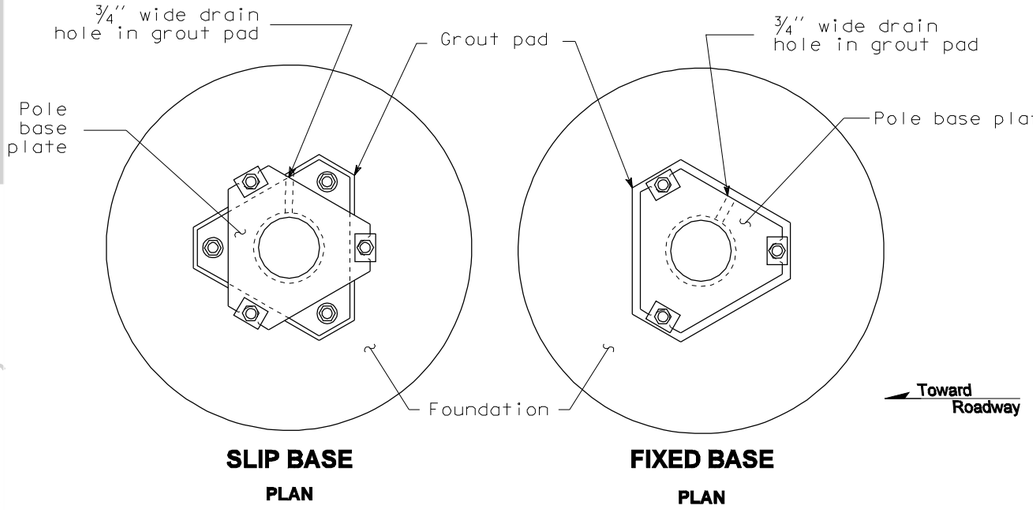

SLIP BASE
PLAN

FIXED BASE
PLAN

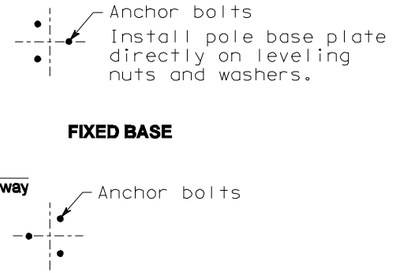

ANCHOR BOLT LAYOUT

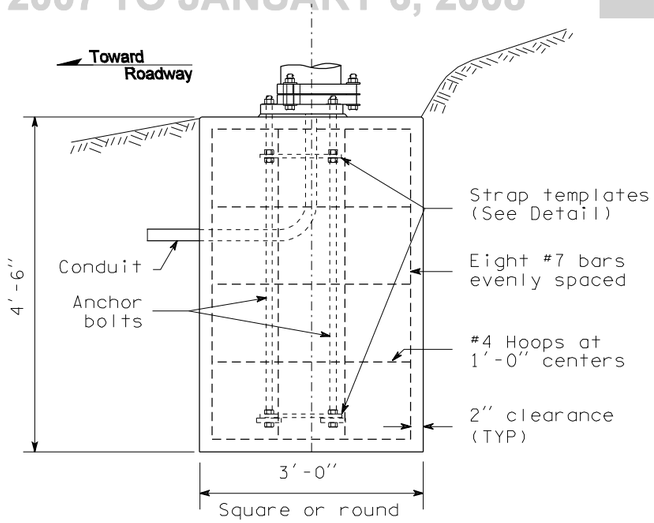

FOUNDATION DETAIL
(See Note 1)

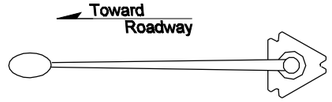

LIGHT STANDARD ORIENTATION

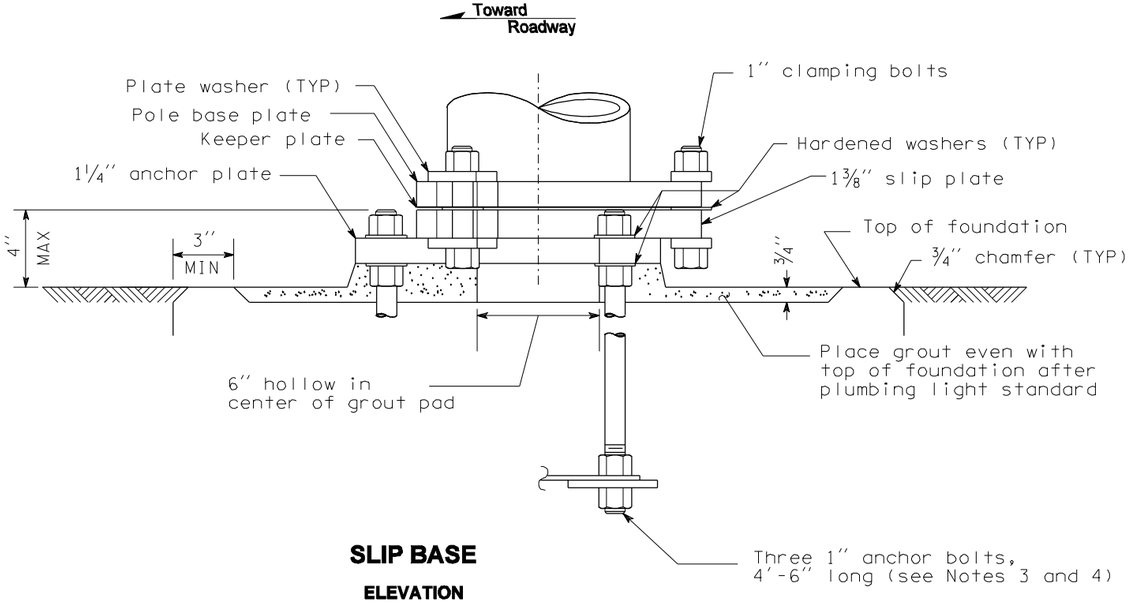

SLIP BASE
ELEVATION

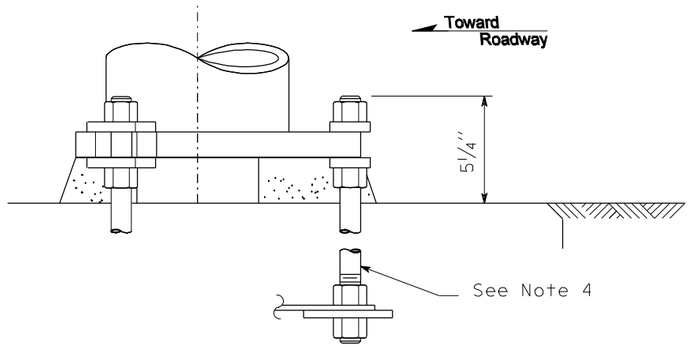

FIXED BASE
ELEVATION

Details similar to slip base except where noted

JEROME A. WEIGEL
STATE OF WASHINGTON
14742
REGISTERED
PROFESSIONAL ENGINEER

EXPIRES JUNE 29, 2000

NOTE: THIS PLAN IS NOT A LEGAL ENGINEERING DOCUMENT BUT AN ELECTRONIC DUPLICATE. THE ORIGINAL, SIGNED BY THE ENGINEER, IS ON FILE AT THE WASHINGTON STATE DEPARTMENT OF TRANSPORTATION. A COPY MAY BE OBTAINED UPON REQUEST.

STEEL LIGHT STANDARD BASE DETAILS

STANDARD PLAN J-1b

SHEET 1 OF 3 SHEETS

APPROVED FOR PUBLICATION

Clifford E. Mansfield *10/08/99*
DEPUTY STATE DESIGN ENGINEER — DATE

WASHINGTON STATE DEPARTMENT OF TRANSPORTATION
OLYMPIA, WASHINGTON

DATE	REVISION	BY
10-99		TWS

EFFECTIVE: APRIL 2, 2007 TO JANUARY 6, 2008

EFFECTIVE: APRIL 2, 2007 TO JANUARY 6, 2008

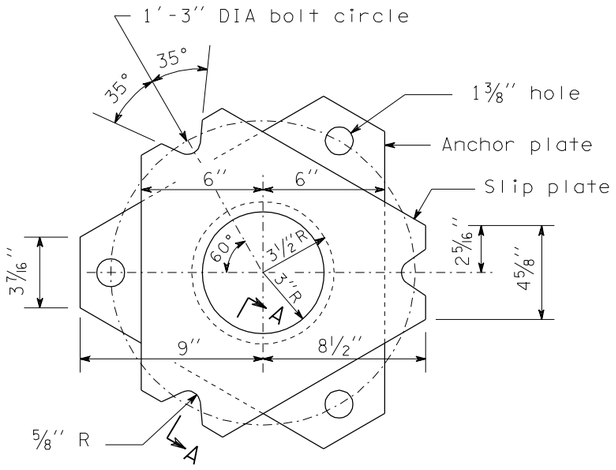

SLIP/ANCHOR PLATES DETAIL

Smooth finish top, bottom, and notched surfaces

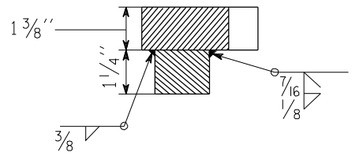

SECTION A-A

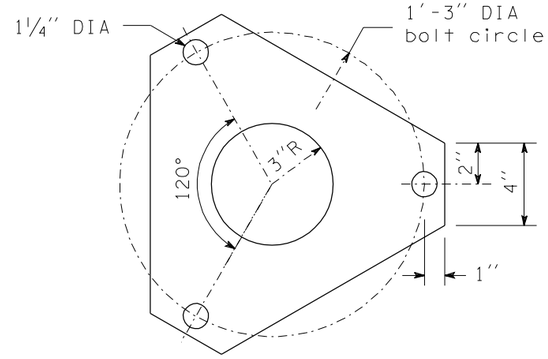

KEEPER PLATE

Place between pole base plate and slip plate on top of middle washers.

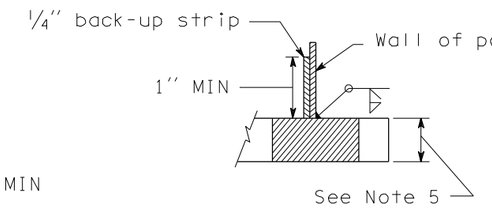

SECTION B-B

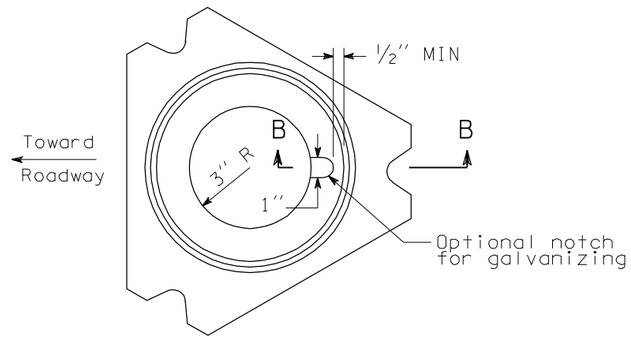

POLE BASE PLATE

Smooth finish top, bottom, and notched surfaces

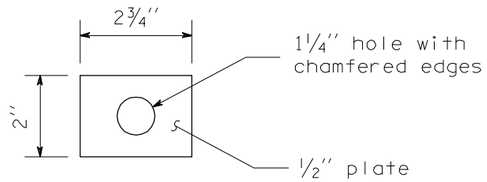

PLATE WASHER

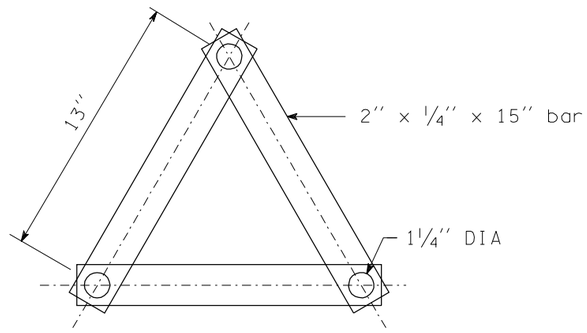

STRAP TEMPLATE ASSEMBLY DETAIL

Place over anchor bolts
(See Note 4)

JEROME A. WEIGEL
STATE OF WASHINGTON
14742
REGISTERED
PROFESSIONAL ENGINEER

EXPIRES JUNE 29, 2000

NOTE: THIS PLAN IS NOT A LEGAL ENGINEERING DOCUMENT BUT AN ELECTRONIC DUPLICATE. THE ORIGINAL, SIGNED BY THE ENGINEER AND APPROVED FOR PUBLICATION, IS KEPT ON FILE AT THE WASHINGTON STATE DEPARTMENT OF TRANSPORTATION. A COPY MAY BE OBTAINED UPON REQUEST.

STEEL LIGHT STANDARD BASE DETAILS

STANDARD PLAN J-1b

SHEET 2 OF 3 SHEETS

APPROVED FOR PUBLICATION

Clifford E. Mansfield *10/08/99*

DEPUTY STATE DESIGN ENGINEER — DATE

WASHINGTON STATE DEPARTMENT OF TRANSPORTATION
OLYMPIA, WASHINGTON

DATE	REVISION	BY
10-99	REVISED SECTION B-B.	TWS

EFFECTIVE: APRIL 2, 2007 TO JANUARY 6, 2008

EFFECTIVE: APRIL 2, 2007 TO JANUARY 6, 2008

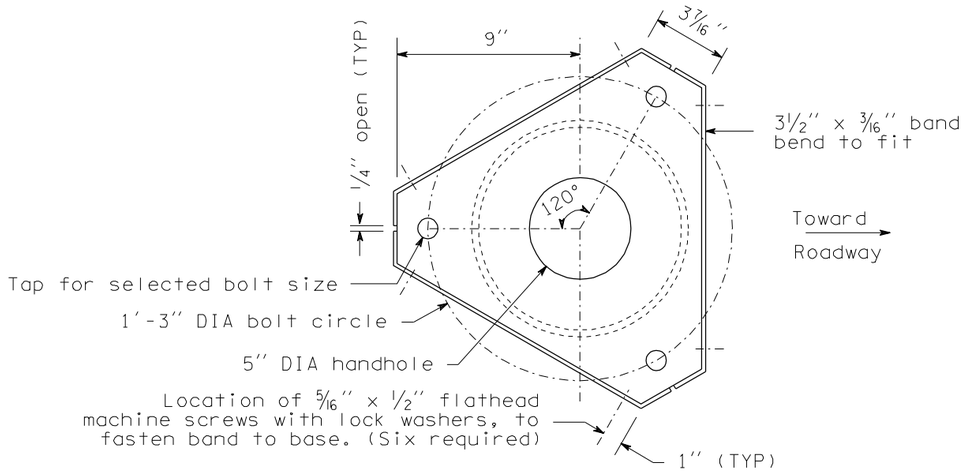

SECTION C-C

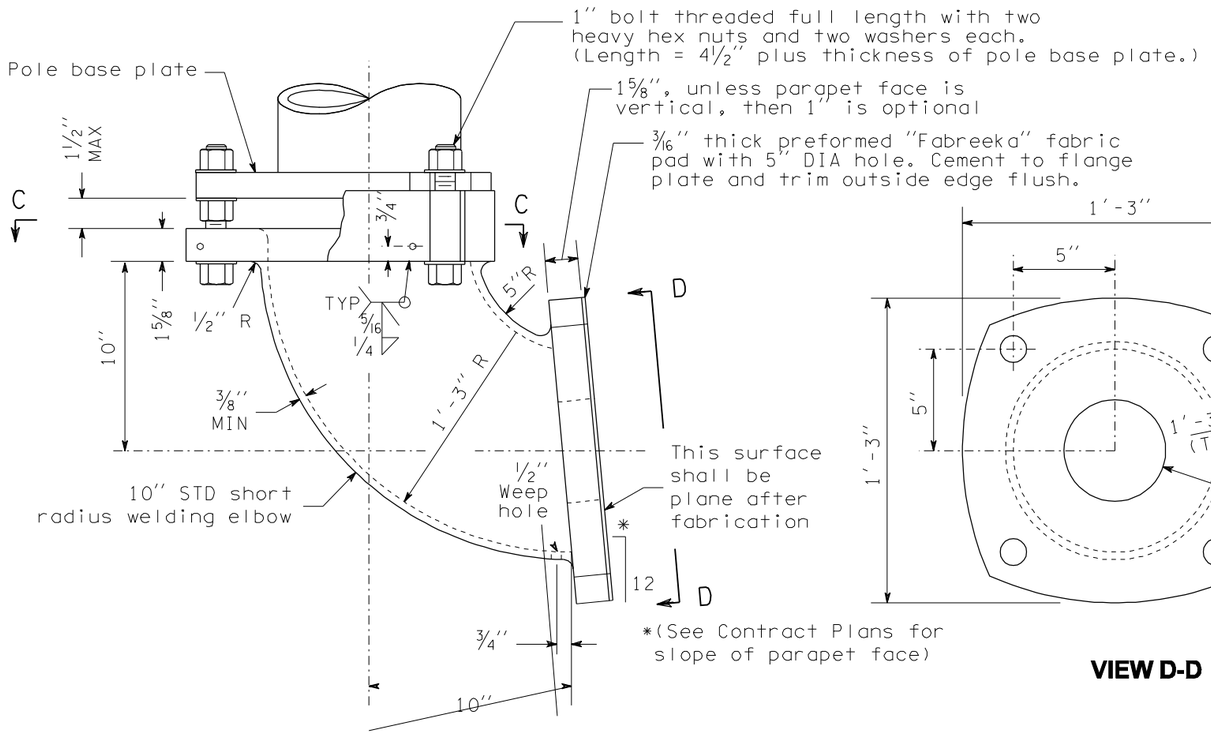

ELEVATION

VIEW D-D

LIGHTING BRACKET DETAIL

For light standards with single arm 12' or less and double arms 8' or less mounted on bridges or retaining walls.

NOTES

1. See Standard Plan C-8b for base plate and foundation requirements when light standards are mounted on concrete barrier.
2. Round and smooth all edges along wire-way to protect conductors. See Standard Plan J-1e for wiring details.
3. The top of the anchor rod shall be both threaded and galvanized a minimum of 12''. The bottom of the anchor rod shall be threaded a minimum of 3''. Galvanizing shall be in accordance with AASHTO M111 after threading. Hooked anchor bolts are not allowed.
4. Strap templates shall be held in place by nuts 6'' from the top of the foundation, and at bottom of anchor bolts resting on 4'' x 3/8'' square washers.
5. Pole base plate for a slip base design shall be 1 1/4'' AASHTO M223 Gr. 345. Pole base plate for a fixed base design may be either 1 1/4'' AASHTO M223 Gr. 345 or 1 1/2'' AASHTO M183.
6. Installation of a 50' pole with double mast arms on a slip base is not allowed.

JEROME A. WEIGEL
STATE OF WASHINGTON
14742
REGISTERED
PROFESSIONAL ENGINEER

EXPIRES JUNE 29, 2000

NOTE: THIS PLAN IS NOT A LEGAL ENGINEERING DOCUMENT BUT AN ELECTRONIC DUPLICATE. THE ORIGINAL, SIGNED BY THE ENGINEER AND APPROVED FOR PUBLICATION, IS KEPT ON FILE AT THE WASHINGTON STATE DEPARTMENT OF TRANSPORTATION. A COPY MAY BE OBTAINED UPON REQUEST.

STEEL LIGHT STANDARD BASE DETAILS

STANDARD PLAN J-1b

SHEET 3 OF 3 SHEETS

APPROVED FOR PUBLICATION

Clifford E. Mansfield *10/08/99*

DEPUTY STATE DESIGN ENGINEER — DATE

WASHINGTON STATE DEPARTMENT OF TRANSPORTATION
OLYMPIA, WASHINGTON

DATE	REVISION	BY
10-99	REVISED NOTES 1, 2 & 5; ADDED NOTE 6.	TWS

EFFECTIVE: APRIL 2, 2007 TO JANUARY 6, 2008

EFFECTIVE: APRIL 2, 2007 TO JANUARY 6, 2008

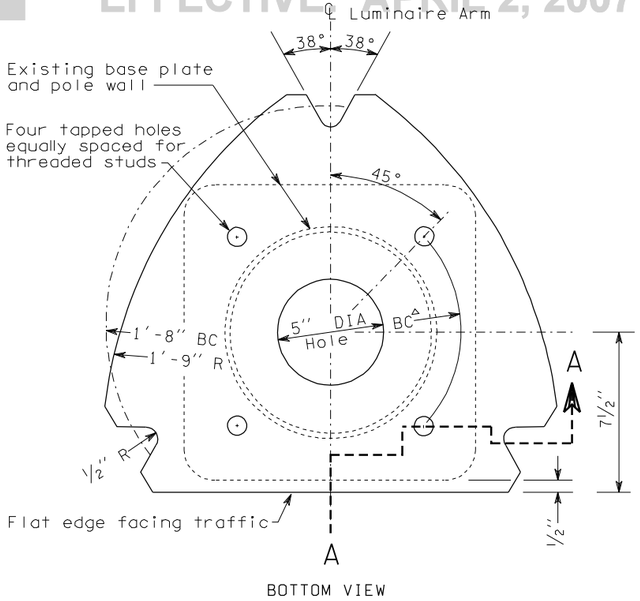

PLAN - TOP SLIP PLATE

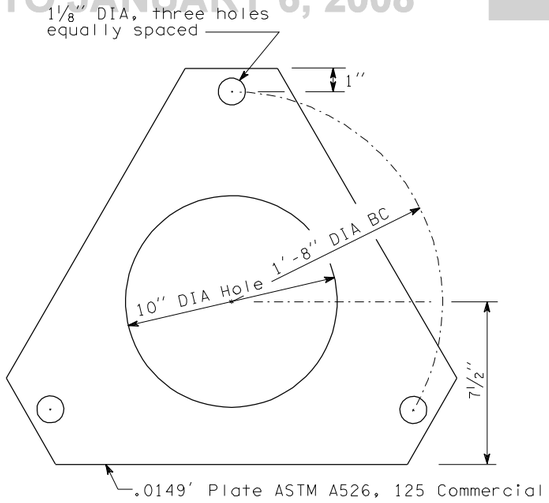

KEEPER PLATE

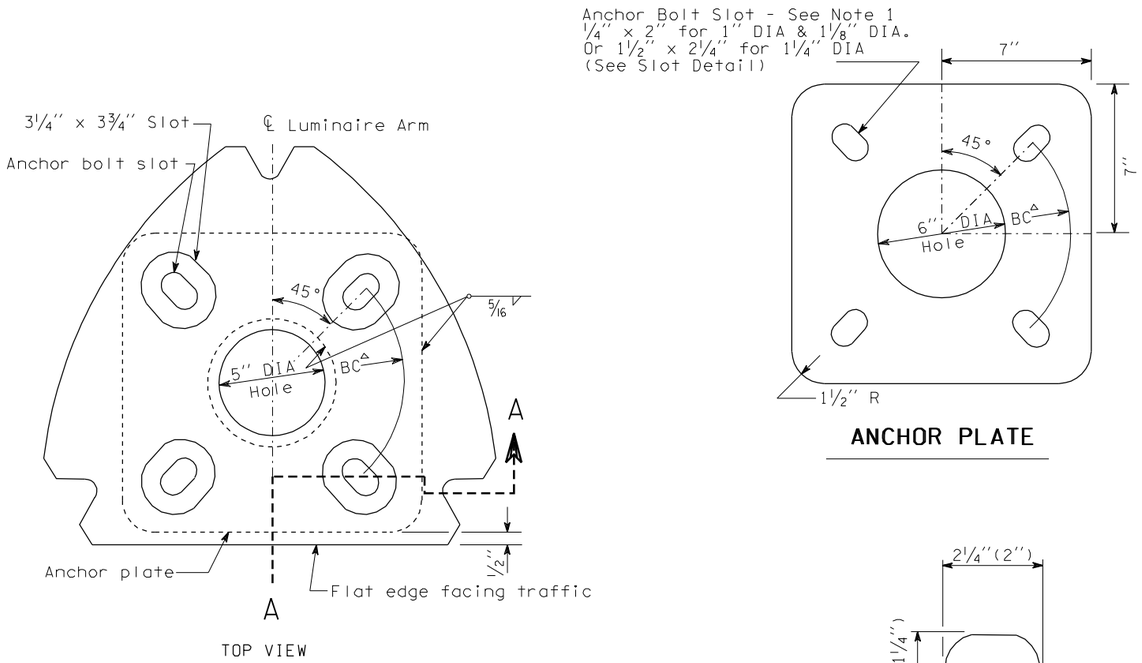

PLAN - BOTTOM SLIP PLATE

ANCHOR PLATE

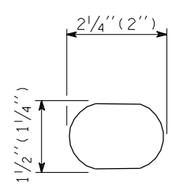

SLOT DETAIL

NOTE:
Plate shall conform to AASHTO M183 M (ASTM A36) except as noted.
Flat washer shall conform to AASHTO M164 M (ASTM A325).

EFFECTIVE: APRIL 2, 2007 TO JANUARY 6, 2008

KEY

1. Clamping Bolts, ⅞" DIA hex head bolt & nut, three plate washers, 50 ft.-lbs. torque. (Three per slip base)
2. Threaded Slotted Stud, see SCHEDULE for DIA, hardened washer and heavy hex nut (four per base plate). Insert stud and center punch at bottom periphery to lock tapped stud in place prior to galvanizing.
3. Keeper Plate
4. Pole Wall (existing)
5. Base Plate (existing)
6. Top Slip Plate
7. Bottom Slip Plate
8. Anchor Plate
9. Grout (exist. w/drain)
10. New Grout Pad
11. Foundation (existing)
12. Hardened Washer
13. Anchor Bolt (existing), trim to clear slip plate by ⅛" MIN.
14. 5/16" Fillet Weld
15. Heavy Hex Nut (TYP)

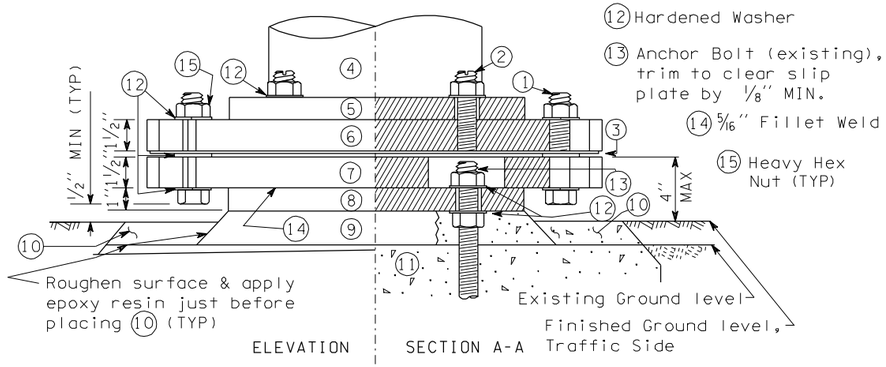

ASSEMBLY DETAILS

After bolting bottom slip plate assembly to foundation, fill slotted bolt holes with mastic.

Grade around foundation to ensure stub height does not exceed 4".

Removal of the frangible base from the existing base plate is required.

Misaligned anchor bolts must be removed and replaced.

SCHEDULE

Adapter Type	Anchor Bolt*	BC△(Bolt Circle)+	Existing Base Type	Luminaire Height ‡
A-1	1"	11"	Welded Plate	30'
A-2	1"	1'-0¼"	Cast Aluminum	30'
A-3	1"	1'-0¾"	Steel Transformer	30'
A-4	1⅛"	1'-2⅛"	2-Pc. Alum. Clamp	40'
A-5	1¼"	1'-2⅛"	2-Pc. Alum. Clamp	40'

* Use matching diameter for threaded studs

\+ Contractor shall verify BC in field before ordering. If BC or anchor bolt sizes differ from those listed, contact Bridge and Structures Office.

‡ Plus or minus 2'-6"



EXPIRES JANUARY 17, 1999

NOTE: THIS PLAN IS NOT A LEGAL ENGINEERING DOCUMENT BUT AN ELECTRONIC DUPLICATE. THE ORIGINAL, SIGNED BY THE ENGINEER AND APPROVED FOR PUBLICATION, IS KEPT ON FILE AT THE WASHINGTON STATE DEPARTMENT OF TRANSPORTATION. A COPY MAY BE OBTAINED UPON REQUEST.

SLIP BASE ADAPTOR FOR 4-BOLT LIGHT STANDARD BASE

STANDARD PLAN J-1c

APPROVED FOR PUBLICATION

Clifford E. Mansfield 04/24/98

DEPUTY STATE DESIGN ENGINEER DATE

WASHINGTON STATE DEPARTMENT OF TRANSPORTATION
OLYMPIA, WASHINGTON

EFFECTIVE: APRIL 2, 2007 TO JANUARY 6, 2008

EFFECTIVE: APRIL 2, 2007 TO JANUARY 6, 2008

DRAWN BY: MARK SUJKA

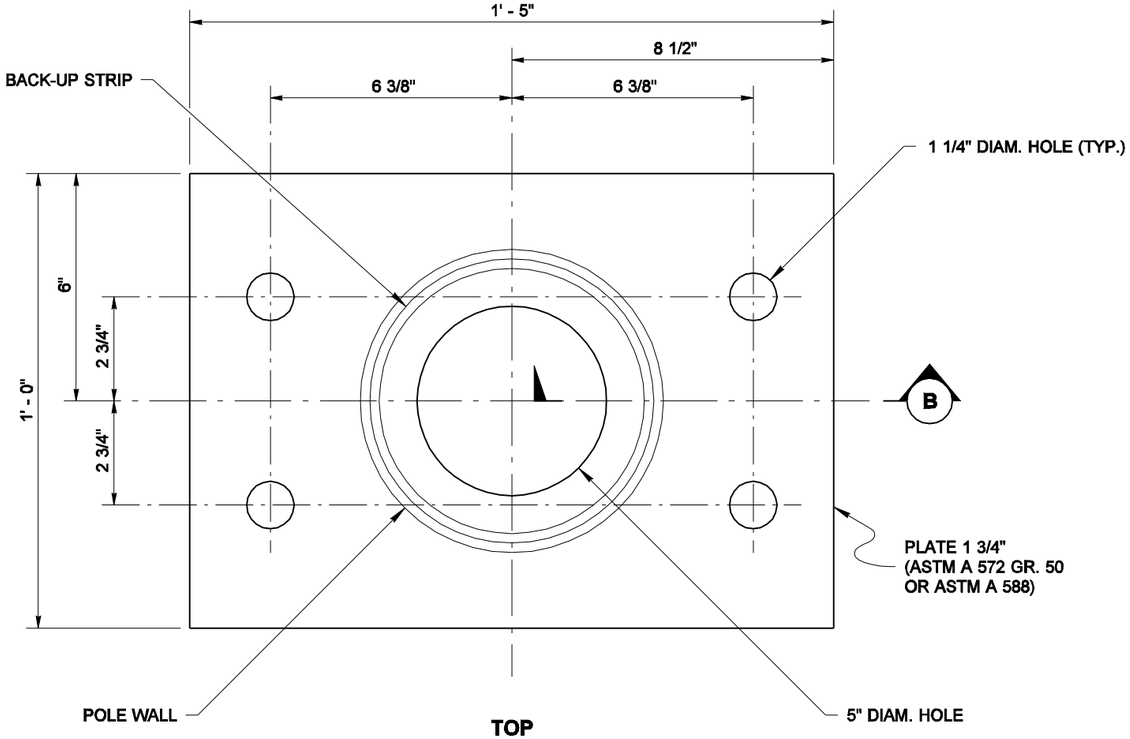

TOP

POLE BASE PLATE

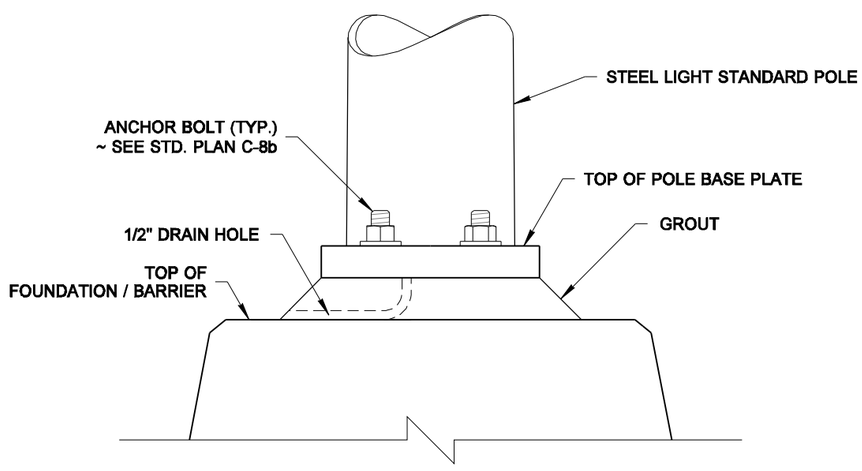

SEE NOTE 4

PLACEMENT DETAIL

NOTES

1. See Standard Plans C-8b and C-14h for foundation details.
2. Round and smooth all edges along the wire-way to protect the conductors.
3. See Standard Plan J-1e for wiring details.
4. Install grout after plumbing the pole.

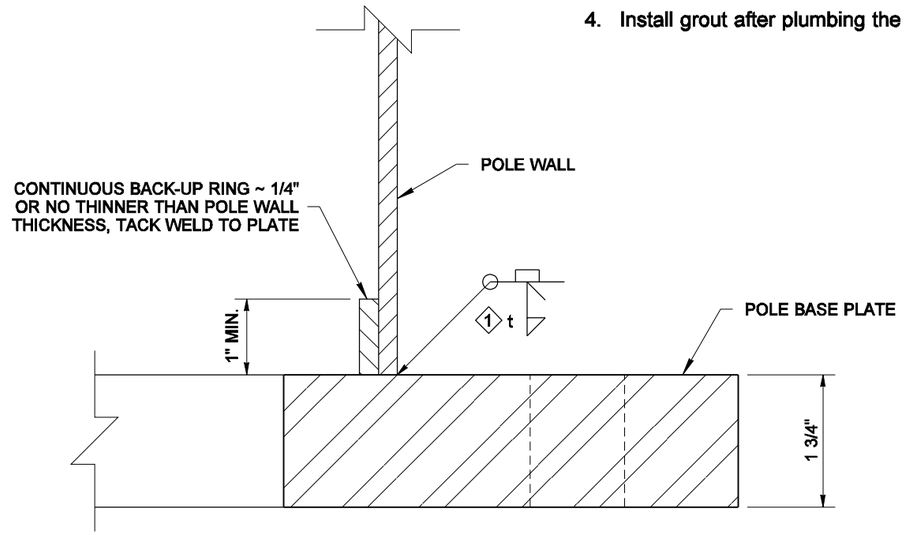

1 t = SIZE OF FILLET WELD
BY LIGHT POLE FABRICATOR

SECTION B

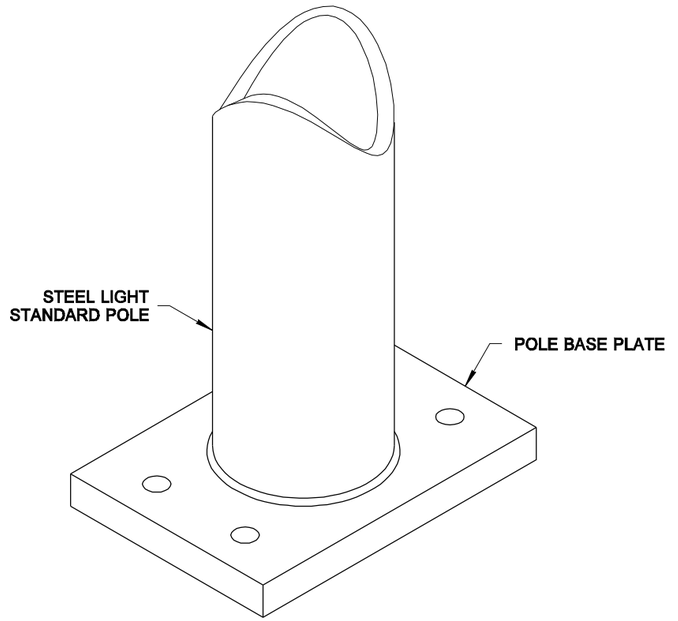

ISOMETRIC

RICHARD P. ZELDENRUST
STATE OF WASHINGTON
25470
REGISTERED
PROFESSIONAL ENGINEER

EXPIRES NOVEMBER 14, 2006

NOTE: THIS PLAN IS NOT A LEGAL ENGINEERING DOCUMENT BUT AN ELECTRONIC DUPLICATE. THE ORIGINAL, SIGNED BY THE ENGINEER AND APPROVED FOR PUBLICATION, IS KEPT ON FILE AT THE WASHINGTON STATE DEPARTMENT OF TRANSPORTATION. A COPY MAY BE OBTAINED UPON REQUEST.

STEEL LIGHT STANDARD BARRIER MOUNTED BASE

STANDARD PLAN J-1d

SHEET 1 OF 1 SHEET

APPROVED FOR PUBLICATION

Harold J. Peterfeso — STATE DESIGN ENGINEER

01-11-06 — DATE

Washington State Department of Transportation

EFFECTIVE: APRIL 2, 2007 TO JANUARY 6, 2008

EFFECTIVE: APRIL 2, 2007 TO JANUARY 6, 2008

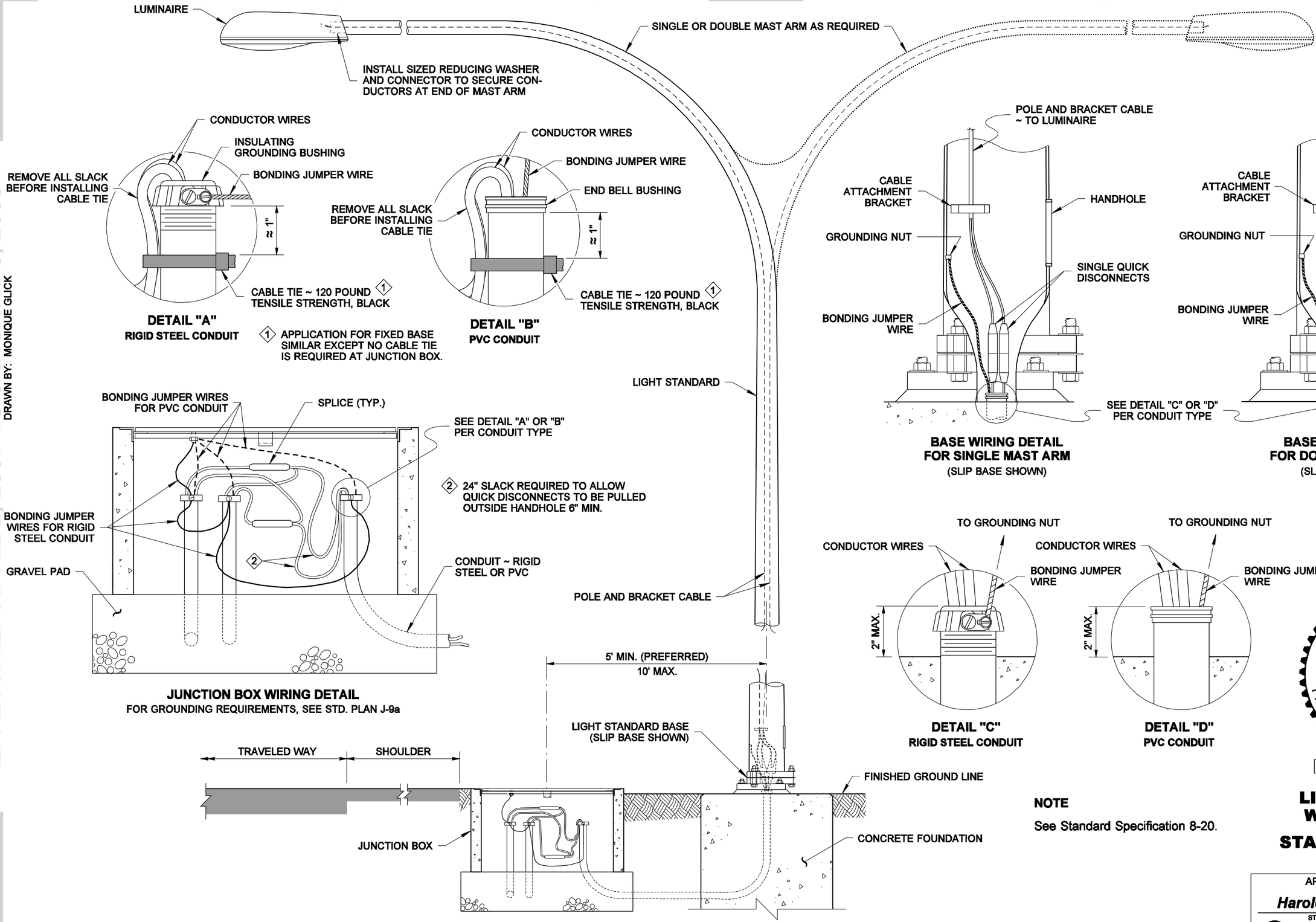

NOTE

See Standard Specification 8-20.

R. SCOTT ZELLER
STATE OF WASHINGTON
28680
REGISTERED
PROFESSIONAL ENGINEER

EXPIRES MAY 5, 2007

NOTE: THIS PLAN IS NOT A LEGAL ENGINEERING DOCUMENT BUT AN ELECTRONIC DUPLICATE. THE ORIGINAL, SIGNED BY THE ENGINEER AND APPROVED FOR PUBLICATION, IS KEPT ON FILE AT THE WASHINGTON STATE DEPARTMENT OF TRANSPORTATION. A COPY MAY BE OBTAINED UPON REQUEST.

LIGHT STANDARD WIRING DETAILS

STANDARD PLAN J-1e

SHEET 1 OF 1 SHEET

APPROVED FOR PUBLICATION

Harold J. Peterfeso — STATE DESIGN ENGINEER — *01-11-06* — DATE

Washington State Department of Transportation

DRAWN BY: MONIQUE GLICK

EFFECTIVE: APRIL 2, 2007 TO JANUARY 6, 2008

EFFECTIVE: APRIL 2, 2007 TO JANUARY 6, 2008

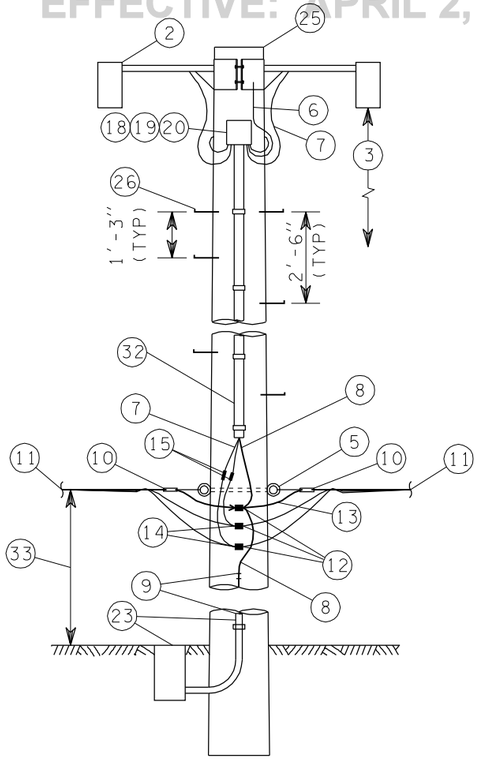

HIGH MAST TIMBER
LUMINAIRE SUPPORT

Shown for 480 VAC power feed.
Increase conductor and fuse size
as required for 240 VAC power feed.

KEY

1. Galvanized steel mast arm - configuration varies with manufacturer
2. Luminaire - see Contract for type and number
3. Mounting height - roadway to luminaire elevation difference ± 2%, see Contract
4. Mast arm length - see Contract
5. 5/8" galvanized thimble eyebolt (single or double) with washers and nuts or eyenut
6. Bonding jumper
7. Pole and bracket cable
8. Equipment grounding conductor see Standard Plan J-9a.
9. From ground line to 10' above ground, enclose equipment grounding conductor in galvanized steel conduit, code sized. Above 10' from ground, staple equipment grounding conductor to pole. Connect to supplemental ground per Standard Plan J-9a.
10. Service wedge clamp
11. ACSR triplex or fourplex conductors - see Contract
12. Copper split bolt connector
13. Messenger cable
14. Insulating tape for waterproof connection
15. Fused quick disconnect - use 30 amp fuses for high mast supports
16. Weatherhead - size as required
17. Steel conduit
18. 8" x 8" x 4" NEMA 3R junction box with raintight hubs and removable cover
19. Grounding lug
20. 12 pole terminal block
21. Direct burial conductors or galvanized steel conduits with conductors - see Contract
22. Grounding bushing
23. Supplemental ground - see Standard Plan J-9a.
24. Class 5 timber pole - length sufficient for mounting height and burial depth
25. Class 2 timber pole - length sufficient for mounting height and burial depth.
26. 5/8" x 9" step bolt
27. 1/4" x 10" plate collar bent to fit pole diameter (8" - 10")
28. 3/8" x 4" machine bolts (four required) with washers and nuts
29. 1/2" lag bolts (six required) - drill 9/16" hole in plate
30. 2" pipe
31. 3/4" wire hole 2" from gusset plate, smooth hole edges
32. 1" nonmetallic conduit with 3/4" straps at code spacing
33. Distance varies, 35' MIN, 50' MAX, depending on line clearance requirements

NOTES:

1. Timber luminaire supports are allowed only for temporary installations where breakaway or slip bases are not required.
2. When down guys are required, See Standard Plan J-7d.

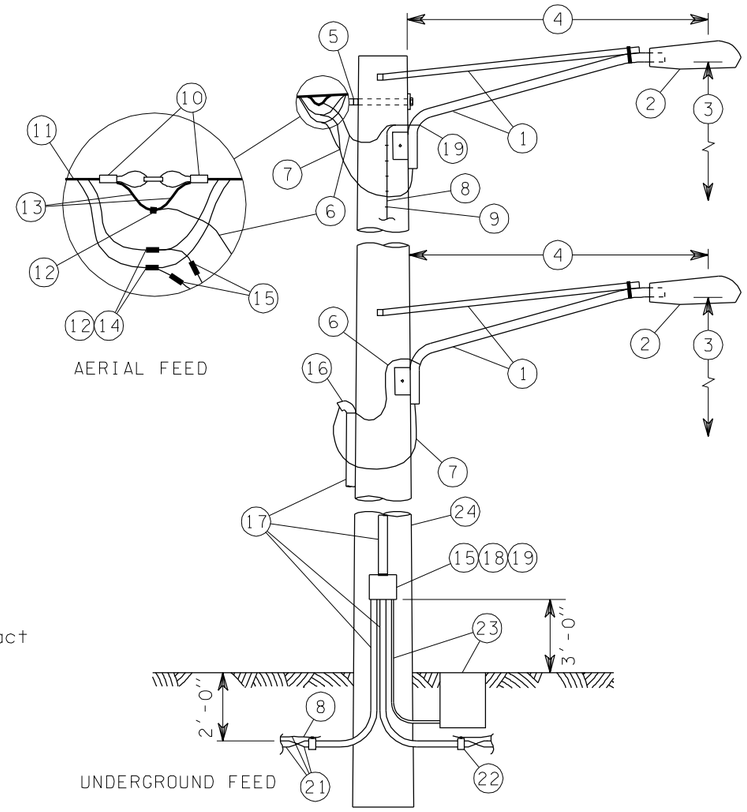

TIMBER LUMINAIRE SUPPORT

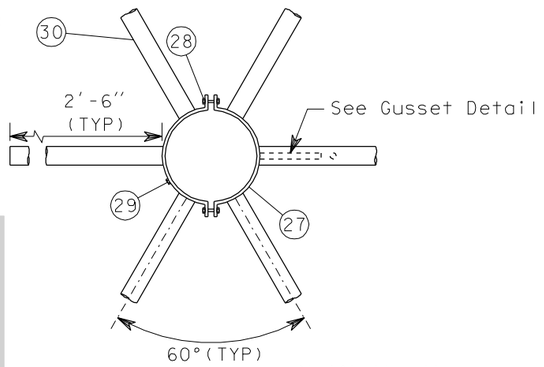

PLAN VIEW
LUMINAIRE SUPPORT BRACKET
GALVANIZE AFTER FABRICATION

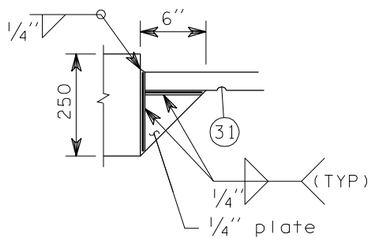

GUSSET DETAIL

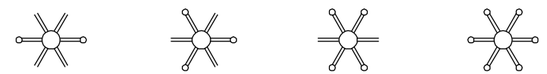

PLAN VIEW
TYPICAL LUMINAIRE MOUNTING
CONFIGURATIONS

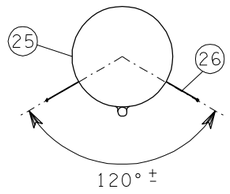

STEP BOLT PLACEMENT

TOBY D. RICKMAN
STATE OF WASHINGTON
24655
REGISTERED
PROFESSIONAL ENGINEER

EXPIRES OCTOBER 26, 2000

NOTE: THIS PLAN IS NOT A LEGAL ENGINEERING DOCUMENT BUT AN ELECTRONIC DUPLICATE. THE ORIGINAL, SIGNED BY THE ENGINEER AND APPROVED FOR PUBLICATION, IS KEPT ON FILE AT THE WASHINGTON STATE DEPARTMENT OF TRANSPORTATION. A COPY MAY BE OBTAINED UPON REQUEST.

TIMBER LIGHT STANDARDS
STANDARD PLAN J-1f

APPROVED FOR PUBLICATION

Clifford E. Mansfield 6/23/00

DEPUTY STATE DESIGN ENGINEER — DATE

WASHINGTON STATE DEPARTMENT OF TRANSPORTATION
OLYMPIA, WASHINGTON

DATE	REVISION	BY
5/00	REPLACED PLAN TITLE REFERENCES WITH PLAN NUMBERS. CORRECTED KEY NOTE 5.	TWS

EFFECTIVE: APRIL 2, 2007 TO JANUARY 6, 2008

EFFECTIVE: APRIL 2, 2007 TO JANUARY 6, 2008

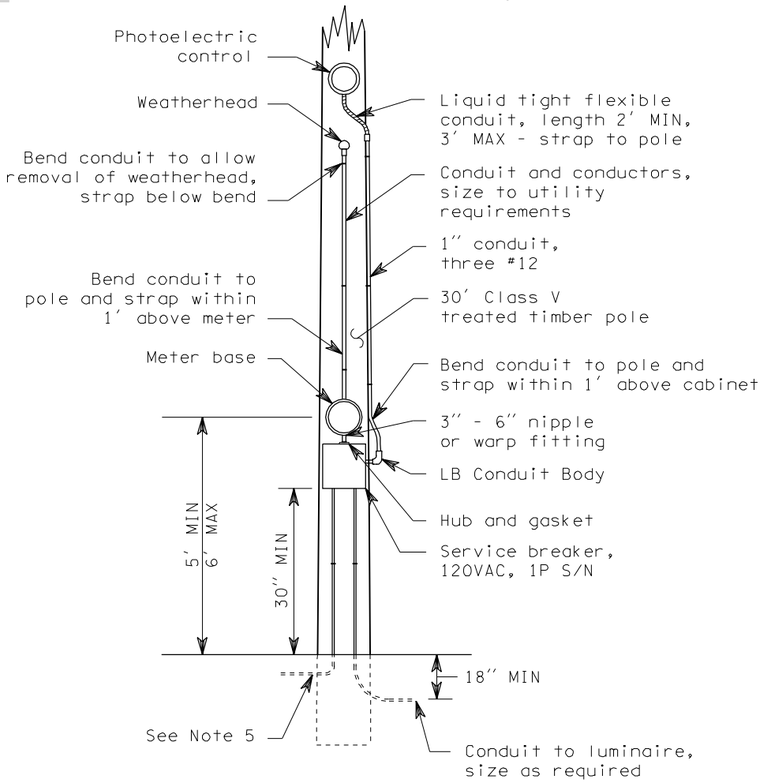

TYPE A SERVICE, 120 VOLT

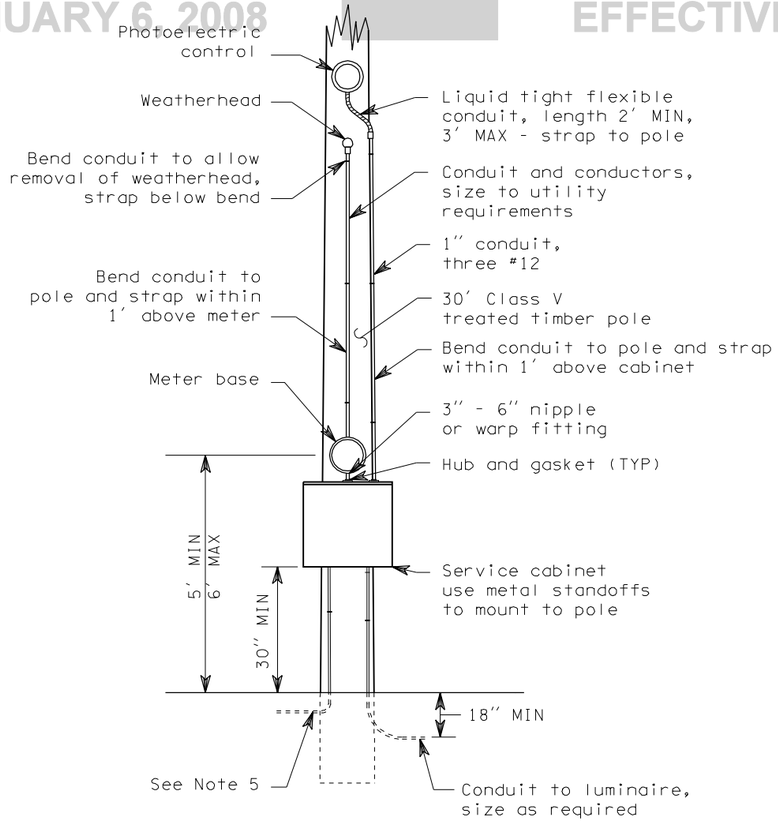

TYPE B SERVICE, 120/240 VOLT

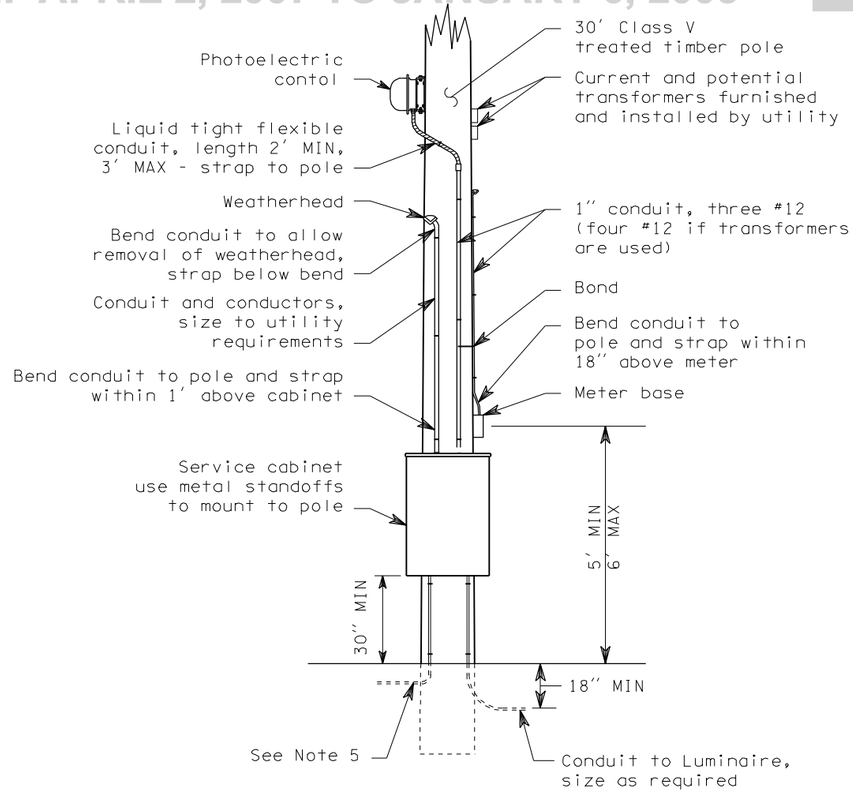

TYPE C SERVICE, 480 VOLT

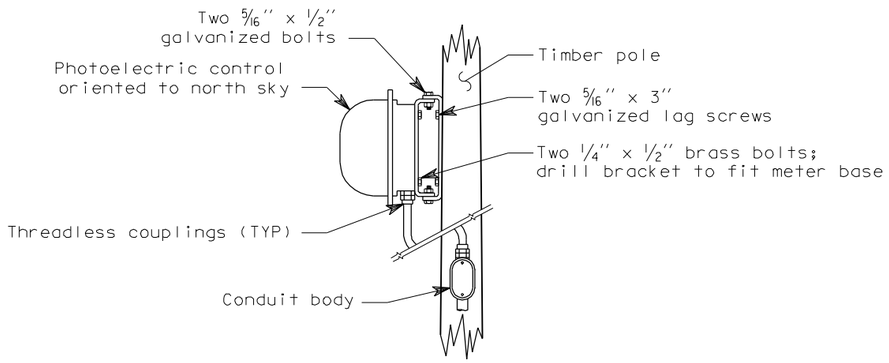

PHOTOELECTRIC CONTROL DETAILS

TYPE A, B AND C SERVICE LIGHTING DETAILS

DAVID K. PEACH
STATE OF WASHINGTON
001089
REGISTERED
PROFESSIONAL ENGINEER
EXPIRES JUNE 4, 1999

NOTE: THIS PLAN IS NOT A LEGAL ENGINEERING DOCUMENT UNLESS IT BEARS THE ORIGINAL SIGNATURE AND SEAL OF THE ENGINEER AND APPROVED FOR PUBLICATION. A RECEIPT ON FILE AT THE WASHINGTON STATE DEPARTMENT OF TRANSPORTATION. A COPY MAY BE OBTAINED UPON REQUEST.

STANDARD PLAN J-3

APPROVED FOR PUBLICATION

Clifford E. Mansfield — STATE DESIGN ENGINEER

08-01-97 — DATE

WASHINGTON STATE DEPARTMENT OF TRANSPORTATION
OLYMPIA, WASHINGTON

EFFECTIVE: APRIL 2, 2007 TO JANUARY 6, 2008

EFFECTIVE: APRIL 2, 2007 TO JANUARY 6, 2008

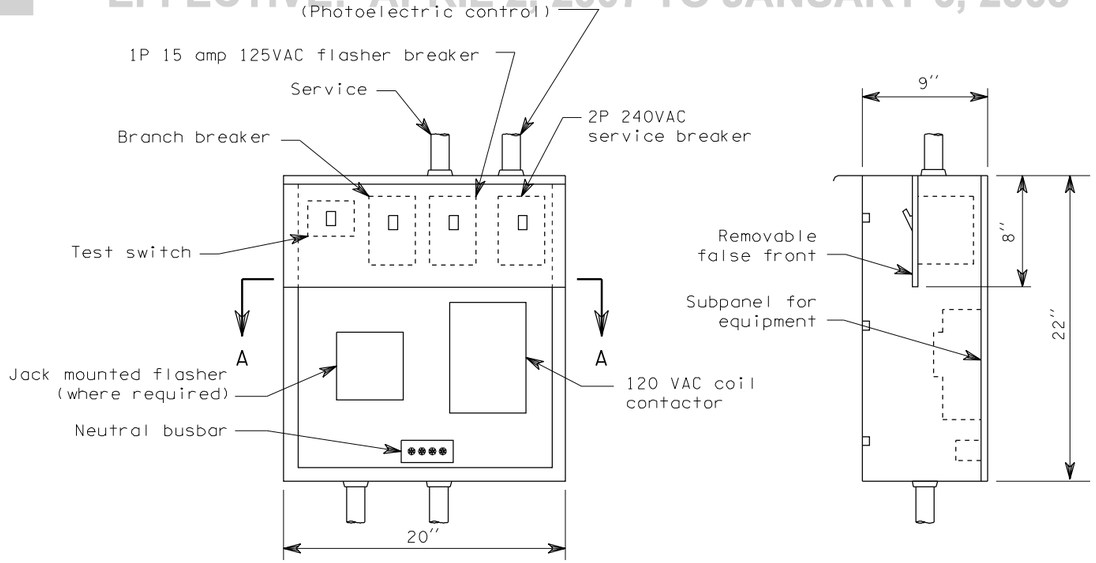

TYPE B SERVICE CABINET

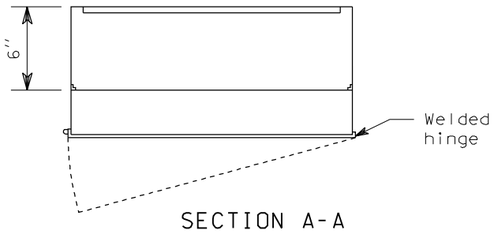

SECTION A-A

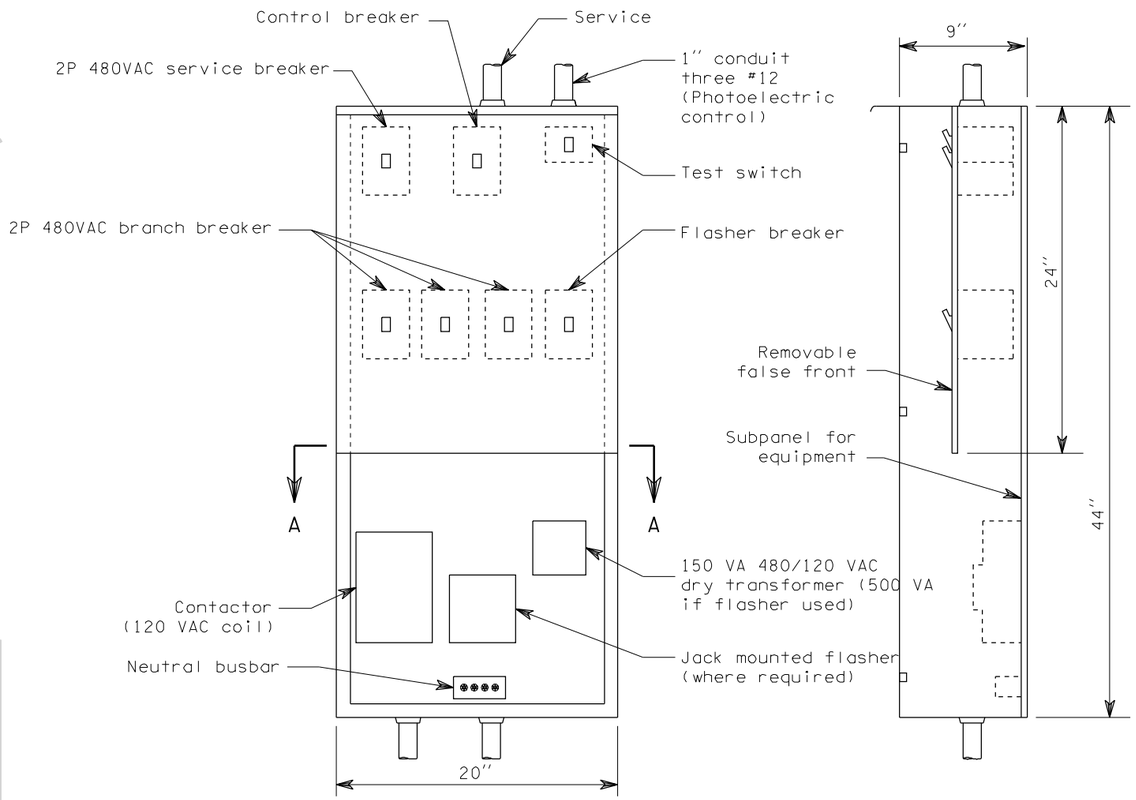

TYPE C SERVICE CABINET

NOTES:

1. Metering arrangements may vary with different serving utilities. The contractor shall verify the requirements of the utility prior to installing the service equipment.
2. All service pole conduit shall be secured to the pole with conduit strap at 5' centers.
3. All risers and service equipment shall be installed on side of pole that is away from traffic.
4. Where required by the serving utility, service breakers shall be installed above the meter socket in a separate raintight enclosure.
5. Bend and attach to pole within 1' of enclosure. See Standard Plan "Typical Grounding Details."
6. For Type B service wiring diagram, use Standard Plan "Modified Type B Service". For Type C service wiring diagram, use Standard Plan, "Type E Service."
7. See breaker schedule in contract for breaker and contactor sizes.

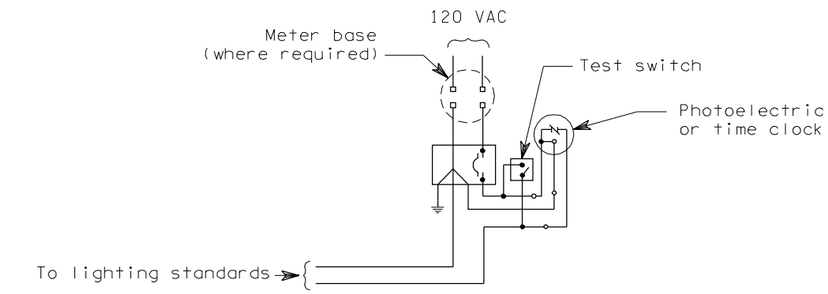

TYPE A WIRING DIAGRAM
120 VOLT

TYPE A, B AND C SERVICE LIGHTING DETAILS

DAVID K. PEACH
STATE OF WASHINGTON
00011089
REGISTERED
PROFESSIONAL ENGINEER
EXPIRES JUNE 4, 1999

NOTE: THIS PLAN IS NOT A LEGAL ENGINEERING DOCUMENT UNLESS IT BEARS THE ORIGINAL WET SIGNATURE OF THE ENGINEER AND APPROVED FOR PUBLICATION, IS KEPT ON FILE AT THE WASHINGTON STATE DEPARTMENT OF TRANSPORTATION. A COPY MAY BE OBTAINED UPON REQUEST.

STANDARD PLAN J-3

APPROVED FOR PUBLICATION

Clifford E. Mansfield — STATE DESIGN ENGINEER
08-01-97 — DATE

WASHINGTON STATE DEPARTMENT OF TRANSPORTATION
OLYMPIA, WASHINGTON

EFFECTIVE: APRIL 2, 2007 TO JANUARY 6, 2008

EFFECTIVE: APRIL 2, 2007 TO JANUARY 6, 2008

GENERAL NOTES

200 AMP TYPE 120/240 1ø SERVICE CABINET

1. SEE STANDARD SPECIFICATION 9-29.24, SERVICE CABINETS.
2. HINGES SHALL HAVE STAINLESS STEEL OR BRASS PINS.
3. CABINETS SHALL BE RATED NEMA 3R AND SHALL INCLUDE TWO RAIN TIGHT VENTS.
4. METERING EQUIPMENT DOOR SHALL BE PAD LOCKABLE. EACH DOOR SHALL BE GASKETED. INSTALL BEST CX CONSTRUCTION CORE ON RIGHT DOOR. SEE DOOR HINGE DETAIL, SHEET 1 OF 2.
5. THE FOLLOWING EQUIPMENT WITHIN THE SERVICE ENCLOSURE SHALL HAVE AN APPROPRIATELY ENGRAVED PHENOLIC NAME PLATE ATTACHED WITH SCREWS OR RIVETS: KEY NUMBERS 2, 3, 4, 6, 7, 8, 9 AND 16. KEY NUMBER 4 NAME PLATE SHALL READ: "PHOTOCELL BYPASS TEST ON" AND "PHOTOCELL TEST OFF- AUTOMATIC". SEE SERVICE CABINET DETAIL.
6. METERING ARRANGEMENTS VARY WITH DIFFERENT SERVING UTILITIES. THE UTILITY MAY REQUIRE METER BASE MOUNTING IN THE ENCLOSURE, ON THE SIDE OR ON THE BACK OF THE ENCLOSURE. THE UTILITY MAY REQUIRE THE DIMENSION BETWEEN THE DOOR AND THE FRONT OF THE SAFETY SOCKET BOX TO BE LESS THAN THE 11 INCHES SHOWN IN THE LEFT SIDE- SAFETY SOCKET BOX MOUNTING DETAIL. THE CONTRACTOR SHALL VERIFY THE SERVING UTILITY'S REQUIREMENTS PRIOR TO FABRICATION OF AND INSTALLING THE SERVICE EQUIPMENT.
7. DIMENSIONS SHOWN ARE MINIMUM AND SHALL BE ADJUSTED TO ACCOMMODATE THE VARIOUS SIZES OF EQUIPMENT INSTALLED.
8. ALL BUSSWORK SHALL BE HIGH GRADE COPPER AND SHALL EQUAL OR EXCEED THE MAIN BREAKER RATING. ALL BREAKERS SHALL BOLT ONTO THE BUSSWORK. JUMPERING OF BREAKERS SHALL NOT BE ALLOWED. BUSSWORK SHALL ACCOMMODATE ALL FUTURE EQUIPMENT AS SHOWN IN THE BREAKER SCHEDULE.
9. THE PHOTOCELL UNIT SHALL BE CENTERED IN THE PHOTOCELL ENCLOSURE TO PERMIT 360 DEGREE ROTATION OF THE PHOTOCELL WITHOUT REMOVAL OF THE PHOTOCELL UNIT OR THE PHOTOCELL ENCLOSURE.
10. ALL INTERNAL WIRE RUNS SHALL BE IDENTIFIED WITH "TO - FROM" CODED TAGS LABELED WITH THE CODE LETTERS AND/OR NUMBERS SHOWN ON THE SCHEDULES. APPROVED PVC OR POLYOLEFIN WIRE MARKING SLEEVES SHALL BE USED.
11. ALL NUTS, BOLTS AND WASHERS USED FOR MOUNTING THE PHOTOCELL ENCLOSURE SHALL BE STAINLESS STEEL.
12. A 1% TOLERANCE IS ALLOWED FOR ALL DIMENSIONS.
13. UNISTRUT TYPE CHANNEL AND MOUNTING HARDWARE COMPONENTS SHALL BE STAINLESS STEEL. CONDUIT CLAMPS SHALL BE HOT DIPPED, GALVANIZED STEEL OR STAINLESS STEEL.
14. INSTALL CONDUIT COUPLINGS ON ALL CONDUITS. PLACE COUPLINGS FLUSH WITH TOP OF CONCRETE FOUNDATION.
15. NOTE 15 HAS BEEN DELETED.
16. THE METER BASE PORTION OF THIS SERVICE WAS DESIGNED TO MEET METERING PORTION OF EUSERC DRAWING 309 REQUIREMENTS.
17. WHEN USING ALTERNATE DOOR HINGE: REMOVE HINGE PIN PRIOR TO WELDING HINGE TO CABINET AND PRIOR TO HOT DIP GALVANIZING CABINET. AFTER GALVANIZING, REPLACE PIN WITH BRASS PIN AND SOLDER IN PLACE.
18. VERIFY THE SERVICE UTILITY STAND-OFF DIMENSION. ADJUST THE REMOVABLE PANEL TO THE MEASUREMENT PROVIDED BY THE UTILITY COMPANY. AFTER ADJUSTMENT, CUT OFF ALL-THREAD BOLTS SO THAT NO LESS THAN 2 AND NO MORE THAN 3 FULL THREADS EXTEND PAST THE FACE OF THE NUTS

DRAWN BY: MARK SUJKA

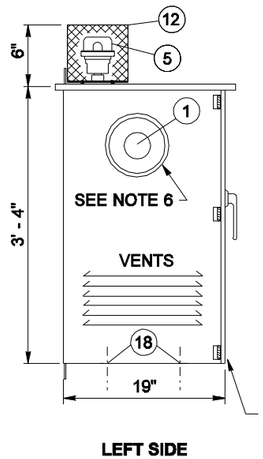

LEFT SIDE

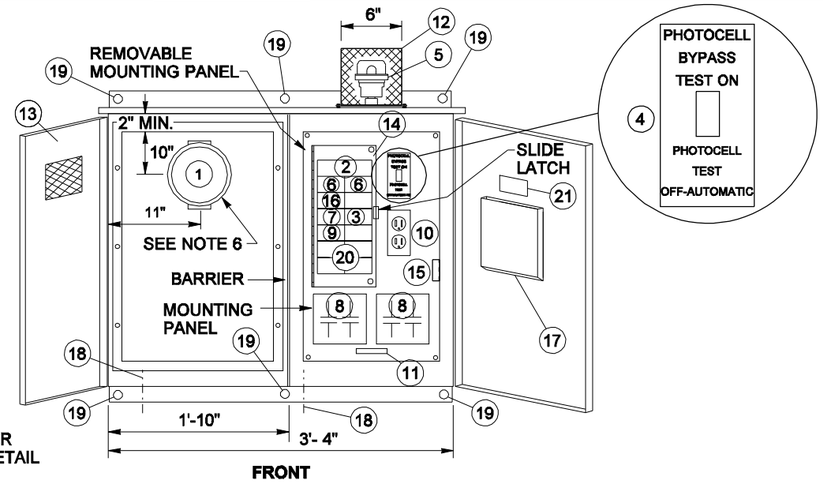

FRONT

SERVICE CABINET DETAIL

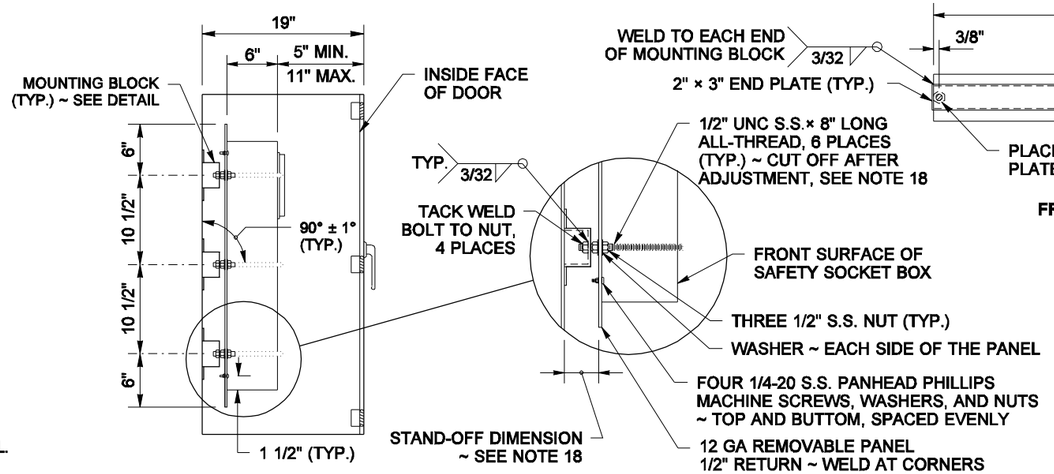

LEFT SIDE- SAFETY SOCKET BOX MOUNTING DETAIL

FRONT VIEW SIDE VIEW

MOUNTING BLOCK DETAIL

12 GA. ~ MATERIAL TO BE THE SAME AS CABINET MATERIAL

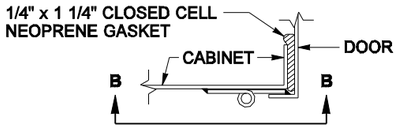

DOOR HINGE DETAIL

ALTERNATE FOR TYPE B MODIFIED CABINET SEE NOTE 17

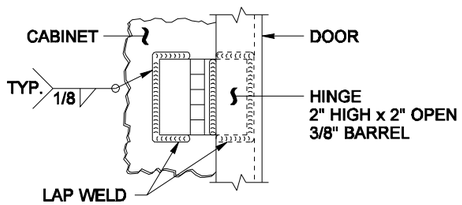

VIEW B-B

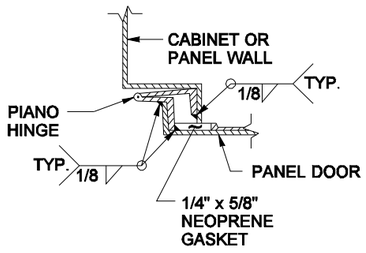

DOOR HINGE DETAIL

KEY

1. METER BASE PER SERVING UTILITY REQUIREMENTS. AS A MINIMUM, THE METER BASE SHALL BE SAFETY SOCKET BOX WITH FACTORY INSTALLED TEST BYPASS FACILITY THAT MEETS THE REQUIREMENTS OF EUSERC DRAWING 305.
2. MAIN BREAKER (SEE BREAKER SCHEDULE)
3. PHOTOCELL BREAKER (SPST 15 AMP - 120/240 VOLT)
4. TEST SWITCH (SPDT SNAP ACTION, POSITIVE CLOSE 15 AMP - 120/277 VOLT - "T" RATED)
5. PHOTOELECTRIC CONTROL, STD. SPEC. 9 - 29.11(2)
6. BRANCH BREAKER (SEE BREAKER SCHEDULE)
7. SIGNAL BREAKER (SEE BREAKER SCHEDULE)
8. CONTACTOR (SEE BREAKER SCHEDULE)
9. RECEPTACLE BREAKER (SPST 20 AMP - 120/240 VOLT)
10. RECEPTACLE, GROUNDED (GFCI 20 AMP - 125 VOLT)
11. NEUTRAL BUSS, 14 LUG COPPER
12. PHOTOCELL ENCLOSURE - ENCLOSURE TO BE FABRICATED FROM 5/8" EXPANDED STEEL MESH WITH WELDED SEAMS AND MOUNTING FLANGES. HOT DIP GALVANIZED AFTER FABRICATION. TYPE 5052 - H32 ALUMINUM WITH 5/8" x 5/8" OPENINGS EQUIVALENT TO 5/8" EXPANDED STEEL MESH MAY BE USED AS ALTERNATIVE MATERIAL. SEE PHOTOCELL ENCLOSURE MOUNTING DETAIL, SHEET 2 OF 2.
13. HINGED FRONT FACING DOOR WITH 4" x 4" MIN. POLISHED WIRE GLASS WINDOW.
14. HINGED DEAD FRONT WITH 1/4 TURN FASTENERS OR SLIDE LATCH.
15. CABINET MAIN BONDING JUMPER. BUSS SHALL BE 4 LUG TINNED COPPER. SEE CABINET MAIN BONDING JUMPER DETAIL ON SHEET 2 OF 2.
16. SPARE BRANCH BREAKER (DPST 20AMP- 120/240 VOLT)
17. METAL WIRING DIAGRAM HOLDER
18. 1/4" DIAMETER DRAIN HOLE. DRILL BEFORE GALVANIZING.
19. MOUNTING HOLE. SEE SERVICE CABINET MOUNTING DETAILS.
20. 18 CIRCUIT PANEL BOARD - MINIMUM SIZE WITH SEPARATE MAIN BREAKER.
21. LABEL CABINET WITH BUSSWORK RATING.

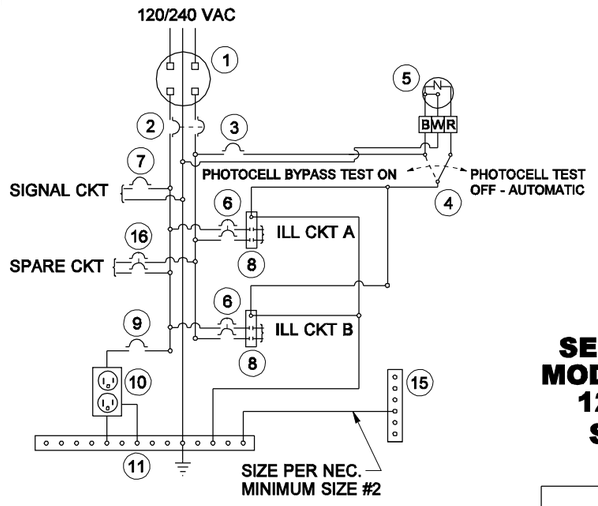

WIRING SCHEMATIC

R. SCOTT ZELLER
STATE OF WASHINGTON
28680
REGISTERED
PROFESSIONAL ENGINEER

EXPIRES MAY 5, 2005

NOTE: THIS PLAN IS NOT A LEGAL ENGINEERING DOCUMENT BUT AN ELECTRONIC DUPLICATE. THE ORIGINAL, SIGNED BY THE ENGINEER AND APPROVED FOR PUBLICATION, IS KEPT ON FILE AT THE WASHINGTON STATE DEPARTMENT OF TRANSPORTATION. A COPY MAY BE OBTAINED UPON REQUEST.

SERVICE CABINET TYPE B MODIFIED (0 - 200 AMP TYPE 120/240 SINGLE PHASE) STANDARD PLAN J-3b

SHEET 1 OF 2 SHEETS

APPROVED FOR PUBLICATION

Harold J. Peterfeso — STATE DESIGN ENGINEER — *03-04-05* — DATE

Washington State Department of Transportation

DATE	REVISION	BY
01/2005	REVISED SAFETY SOCKET BOX MOUNTING DETAIL	EB

EFFECTIVE: APRIL 2, 2007 TO JANUARY 6, 2008

EFFECTIVE: APRIL 2, 2007 TO JANUARY 6, 2008

DRAWN BY: MARK SUJKA

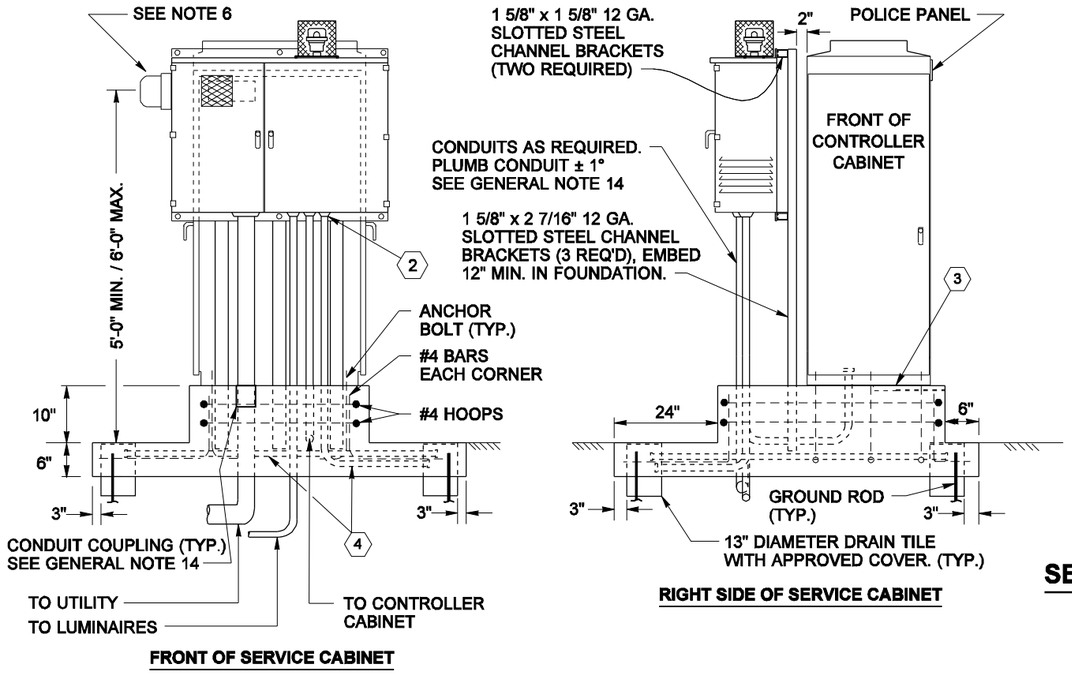

FRONT OF SERVICE CABINET

RIGHT SIDE OF SERVICE CABINET

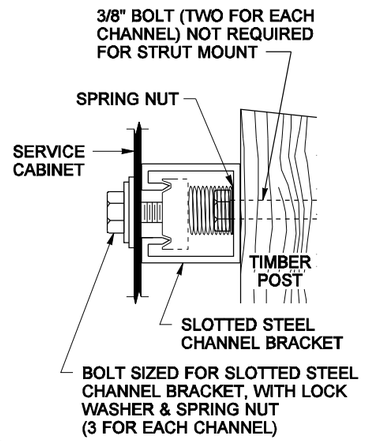

CABINET BRACKET MOUNTING DETAIL

SERVICE CABINET MOUNTING DETAILS

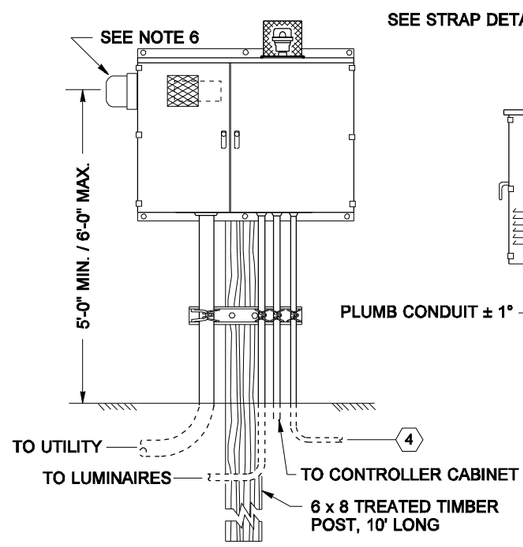

FRONT OF SERVICE CABINET

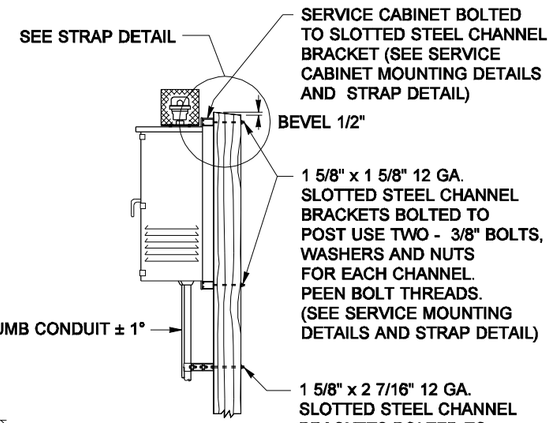

RIGHT SIDE OF SERVICE CABINET

POST MOUNT

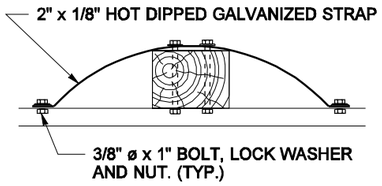

POST MOUNT STRAP DETAIL

STRUT MOUNT

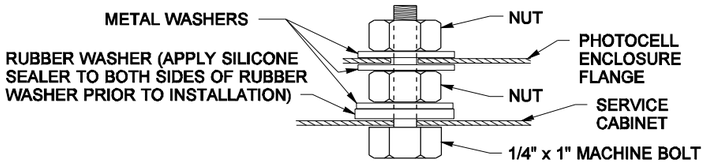

PHOTOCELL ENCLOSURE MOUNTING DETAIL

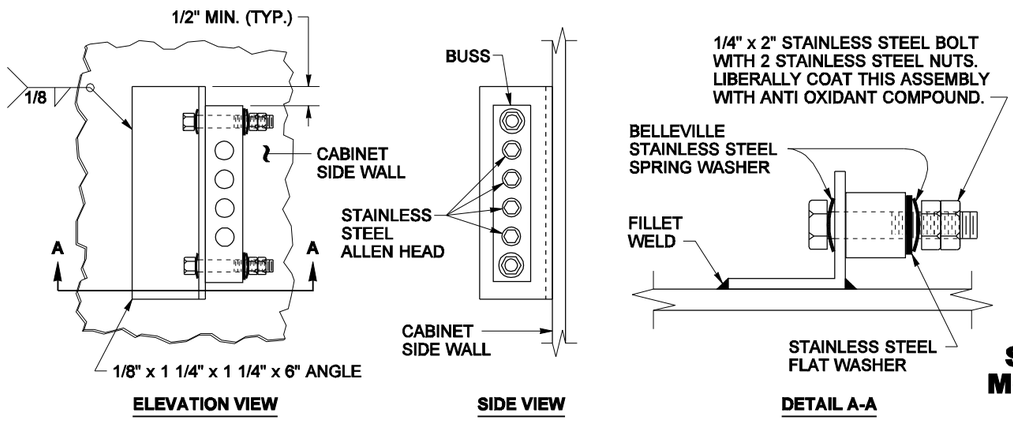

ELEVATION VIEW **SIDE VIEW** **DETAIL A-A**

CABINET MAIN BONDING JUMPER DETAIL

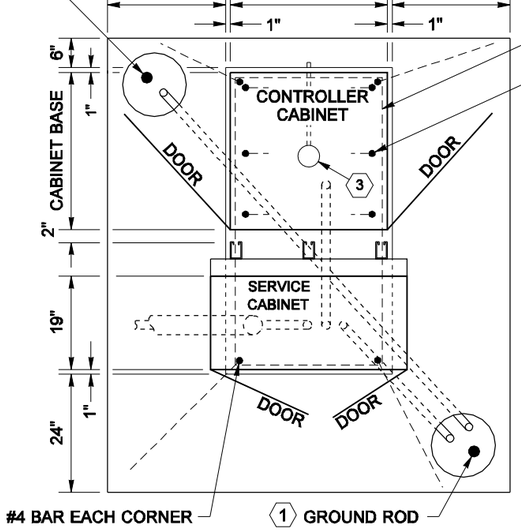

PLAN VIEW OF SERVICE CABINET

SEE STANDARD PLAN J-6c "CABINET FOUNDATION DETAILS", FOR DETAILS NOT SHOWN.

1. DRIVE GROUND RODS BEFORE PLACING CONCRETE. MOVE ROD(S) AND DRAIN TILE(S) WITH COVER(S) AS REQUIRED TO ACHIEVE FULL GROUND PENETRATION. MAINTAIN A 6' MINIMUM CLEARANCE BETWEEN GROUND RODS AS DETAILED ON STD. PLAN J-9a "TYPICAL GROUNDING DETAILS".
2. ALL CONDUITS PENETRATING CABINET SHALL BE TERMINATED WITH GROUNDING END BUSHING AND BONDED TO THE CABINET GROUNDING BUS.
3. 4" DIAM. x 1/2" DEEP SUMP. SLOPE FOUNDATION TOWARDS SUMP. 3/8" DIAM. POLYETHYLENE OR COPPER DRAIN PIPE. SLOPE TO DRAIN OUTSIDE FOUNDATION.
4. TO SERVICE GROUND - PER STD. PLAN J-9a "TYPICAL GROUNDING DETAILS"

R. SCOTT ZELLER
STATE OF WASHINGTON
28680
REGISTERED
PROFESSIONAL ENGINEER
EXPIRES MAY 5, 2005

NOTE: THIS PLAN IS NOT A LEGAL ENGINEERING DOCUMENT BUT AN ELECTRONIC DUPLICATE. THE ORIGINAL, SIGNED BY THE ENGINEER, AND APPROVED FOR PUBLICATION, IS KEPT ON FILE AT THE WASHINGTON STATE DEPARTMENT OF TRANSPORTATION. A COPY MAY BE OBTAINED UPON REQUEST.

SERVICE CABINET TYPE B MODIFIED (0 - 200 AMP TYPE 120/240 SINGLE PHASE)
STANDARD PLAN J-3b

SHEET 2 OF 2 SHEETS

APPROVED FOR PUBLICATION

Harold J. Peterfeso — STATE DESIGN ENGINEER — *03-04-05* — DATE

Washington State Department of Transportation

EFFECTIVE: APRIL 2, 2007 TO JANUARY 6, 2008

EFFECTIVE: APRIL 2, 2007 TO JANUARY 6, 2008

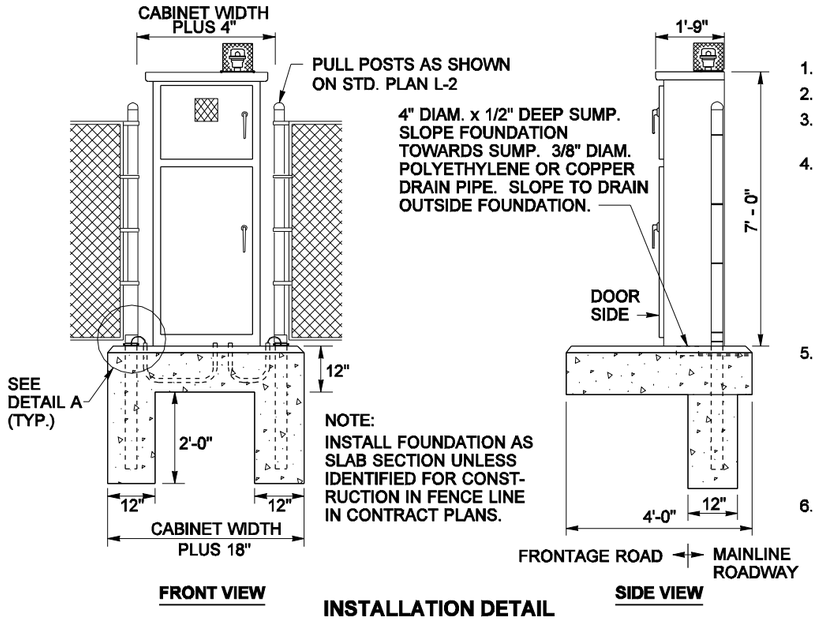

INSTALLATION DETAIL

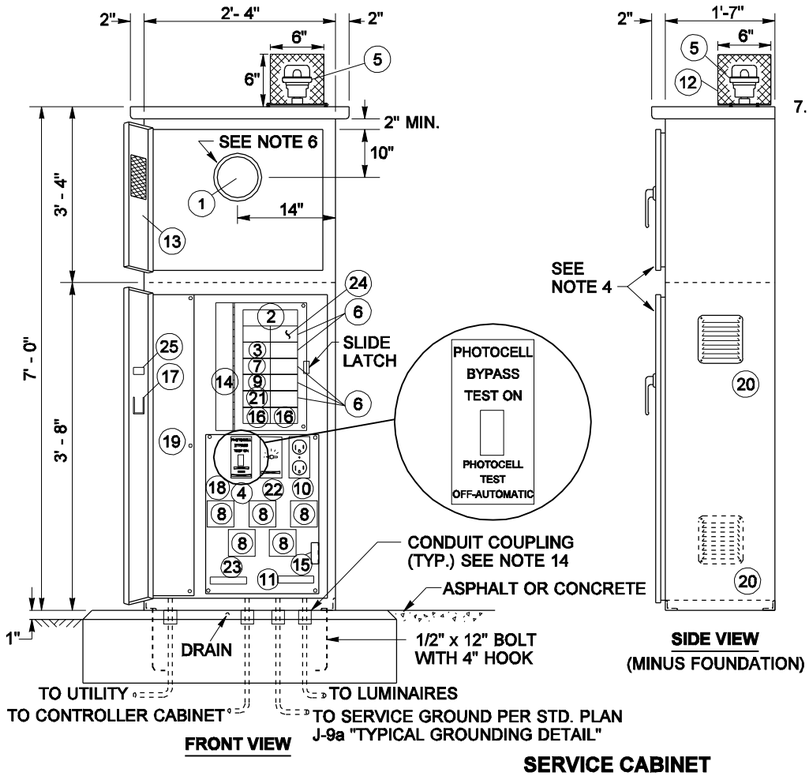

SERVICE CABINET

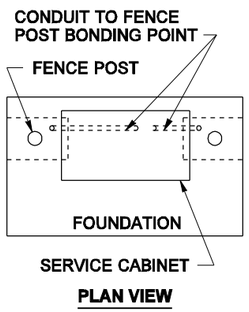

GENERAL NOTES

200 AMP TYPE 120/240 1ø SERVICE CABINET

1. SEE STD. SPECIFICATION 9-29.24, SERVICE CABINETS.
2. HINGES SHALL HAVE STAINLESS STEEL OR BRASS PINS.
3. CABINETS SHALL BE RATED NEMA 3R AND SHALL INCLUDE TWO RAIN TIGHT VENTS.
4. METERING EQUIPMENT DOOR SHALL BE PAD LOCKABLE. EACH DOOR SHALL BE GASKETED. INSTALL BEST CX CONSTRUCTION CORE ON BOTTOM DOOR. SEE DOOR HINGE DETAIL, STANDARD PLAN J-3b. CONCEALED HEAVY DUTY STAINLESS STEEL LIFT OFF HINGES ARE ALLOWED AS AN ALTERNATIVE TO DOOR HINGE DETAIL SHOWN ON STANDARD PLAN J-3b. UPPER DOOR SHALL HAVE 2 HINGES AND LOWER DOOR SHALL HAVE 3 HINGES. THE LOWER DOOR SHALL HAVE A TWO POSITION DOOR STOP ASSEMBLY.
5. THE FOLLOWING EQUIPMENT WITHIN THE SERVICE ENCLOSURE SHALL HAVE AN APPROPRIATELY ENGRAVED PHENOLIC NAME PLATE ATTACHED WITH SCREWS OR RIVETS:
   KEY NUMBERS 2, 3, 4, 6, 7, 8, 9, 16 AND 21.
   KEY NUMBER 4 NAME PLATE SHALL READ:
   "PHOTOCELL BYPASS TEST ON" AND "PHOTOCELL TEST OFF- AUTOMATIC". SEE SERVICE CABINET DETAIL.
6. METERING ARRANGEMENTS VARY WITH DIFFERENT SERVING UTILITIES. THE UTILITY MAY REQUIRE METER BASE MOUNTING IN THE ENCLOSURE, ON THE SIDE OR ON THE BACK OF THE ENCLOSURE. THE UTILITY MAY REQUIRE THE DIMENSION BETWEEN THE DOOR AND THE FRONT OF THE SAFETY SOCKET BOX TO BE LESS THAN THE 11 INCHES SHOWN IN THE LEFT SIDE- SAFETY SOCKET BOX MOUNTING DETAIL. SEE STANDARD PLAN J-3b FOR SAFETY SOCKET BOX DETAIL. THE CONTRACTOR SHALL VERIFY THE SERVING UTILITY'S REQUIREMENTS PRIOR TO FABRICATION OF AND INSTALLING THE SERVICE EQUIPMENT.
7. DIMENSIONS SHOWN ARE MINIMUM AND SHALL BE ADJUSTED TO ACCOMMODATE THE VARIOUS SIZES OF EQUIPMENT INSTALLED.
8. ALL BUSSWORK SHALL BE HIGH GRADE COPPER AND SHALL EQUAL OR EXCEED THE MAIN BREAKER RATING. ALL BREAKERS SHALL BOLT ONTO THE BUSSWORK. JUMPERING OF BREAKERS SHALL NOT BE ALLOWED. BUSSWORK SHALL ACCOMMODATE ALL FUTURE EQUIPMENT AS SHOWN IN THE BREAKER SCHEDULE.
9. THE PHOTOCELL UNIT SHALL BE CENTERED IN THE PHOTOCELL ENCLOSURE TO PERMIT 360 DEGREE ROTATION OF THE PHOTOCELL WITHOUT REMOVAL OF THE PHOTOCELL UNIT OR PHOTOCELL ENCLOSURE.
10. ALL INTERNAL WIRE RUNS SHALL BE IDENTIFIED WITH "TO - FROM" CODED TAGS LABELED WITH THE CODE LETTERS AND/OR NUMBERS SHOWN ON THE SCHEDULES. APPROVED PVC OR POLYOLEFIN WIRE MARKING SLEEVES SHALL BE USED.
11. ALL NUTS, BOLTS AND WASHERS USED FOR MOUNTING THE PHOTOCELL ENCLOSURE SHALL BE STAINLESS STEEL.
12. A 1% TOLERANCE IS ALLOWED FOR ALL DIMENSIONS.
13. THE PHOTOCELL CIRCUIT SHALL BE INSTALLED IN FLEX CONDUIT WITHIN THE METER COMPARTMENT.
14. INSTALL CONDUIT COUPLINGS ON ALL CONDUITS. PLACE COUPLINGS FLUSH WITH TOP OF CONCRETE FOUNDATION.
15. SEE PLANS FOR BREAKER SCHEDULE.
16. SEAL CABINET TO FOUNDATION WITH A 1/2" BEAD OF SILICONE. APPLY SILICONE TO DRY SURFACE ONLY.
17. THE METER BASE PORTION OF THIS SERVICE WAS DESIGNED TO MEET METERING PORTION OF EUSERC DRAWING 309 REQUIREMENTS.

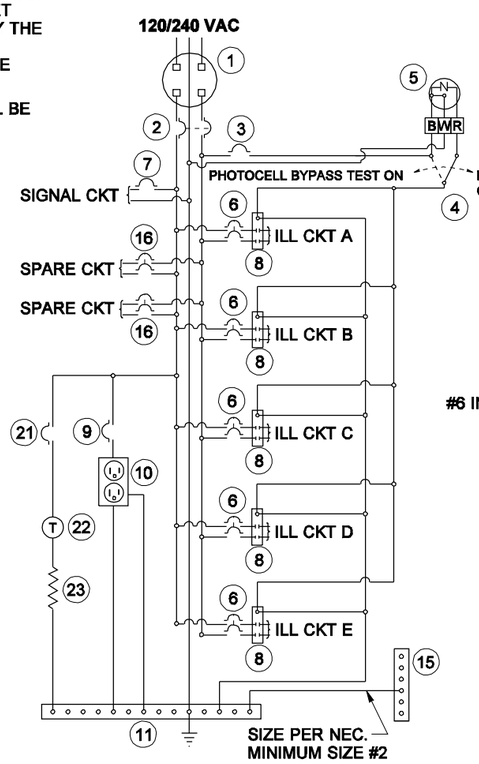

WIRING SCHEMATIC

KEY

1. METER BASE PER SERVING UTILITY REQUIREMENTS. AS A MINIMUM, THE METER BASE SHALL BE SAFETY SOCKET BOX WITH FACTORY INSTALLED TEST BYPASS FACILITY THAT MEETS THE REQUIREMENTS OF EUSERC DRAWING 305.
2. MAIN BREAKER (SEE BREAKER SCHEDULE)
3. PHOTOCELL BREAKER (SPST 15 AMP - 120/240 VOLT)
4. TEST SWITCH (SPDT SNAP ACTION, POSITIVE CLOSE, 15 AMP - 120/277 VOLT "T" RATED)
5. PHOTOELECTRIC CONTROL, STD. SPEC. 9 - 29.11(2)
6. BRANCH BREAKER (SEE BREAKER SCHEDULE)
7. SIGNAL BREAKER (SEE BREAKER SCHEDULE)
8. CONTACTOR (SEE BREAKER SCHEDULE)
9. RECEPTACLE BREAKER (SPST 20 AMP - 120/240 VOLT)
10. RECEPTACLE, GROUNDED (GFCI 20 AMP - 125 VOLT)
11. NEUTRAL BUSS, 14 LUG COPPER
12. PHOTOCELL ENCLOSURE - ENCLOSURE TO BE FABRICATED FROM 5/8" EXPANDED STEEL MESH WITH WELDED SEAMS AND MOUNTING FLANGES. HOT DIP GALVANIZED AFTER FABRICATION. TYPE 5052 - H32 ALUMINUM WITH 5/8" x 5/8" OPENINGS EQUIVALENT TO 5/8" EXPANDED STEEL MESH MAY BE USED AS ALTERNATIVE MATERIAL. SEE PHOTOCELL ENCLOSURE MOUNTING DETAILS, STANDARD PLAN J-3b.
13. HINGED FRONT FACING DOOR WITH 4" x 4" MIN. POLISHED WIRE GLASS WINDOW.
14. HINGED DEAD FRONT WITH 1/4 TURN FASTENERS OR SLIDE LATCH.
15. CABINET MAIN BONDING JUMPER. BUSS SHALL BE 4 LUG TINNED COPPER. SEE CABINET MAIN BONDING JUMPER DETAIL, STANDARD PLAN J-3b.
16. SPARE BRANCH BREAKER (DPST 20AMP- 120/240 VOLT)
17. METAL WIRING DIAGRAM HOLDER
18. REMOVABLE EQUIPMENT MOUNTING PAN
19. 6" x 6" MIN. UNDERGROUND FEED - SERVICE WIREWAY (LEFT REAR CORNER)
20. SCREENED VENTS, 2 REQUIRED, 1 EACH SIDE, LOUVERED PLATES.
21. HEATER BREAKER (SPST 15 AMP - 120/240 VOLT)
22. THERMOSTAT, 40°F CLOSURE - 3 DIFFERENTIAL
23. STRIP HEATER (100 WATT NOMINAL) , WITH TERMINAL STRIP COVER.
24. 24 CIRCUIT PANEL BOARD - MINIMUM SIZE WITH SEPARATE MAIN BREAKER.
25. LABEL CABINET WITH BUSSWORK RATING.

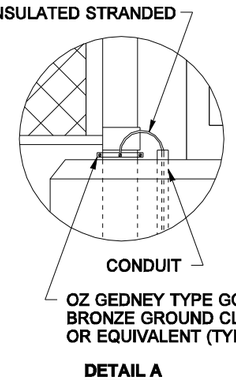

DETAIL A

R. SCOTT ZELLER
STATE OF WASHINGTON
28680
REGISTERED
PROFESSIONAL ENGINEER

EXPIRES MAY 5, 2003

NOTE: THIS PLAN IS NOT A LEGAL ENGINEERING DOCUMENT BUT AN ELECTRONIC DUPLICATE. THE ORIGINAL, SIGNED BY THE ENGINEER AND APPROVED FOR PUBLICATION, IS KEPT ON FILE AT THE WASHINGTON STATE DEPARTMENT OF TRANS-PORTATION. A COPY MAY BE OBTAINED UPON REQUEST.

SERVICE CABINET TYPE D (0 - 200 AMP TYPE 120/240 SINGLE PHASE) STANDARD PLAN J-3c

SHEET 1 OF 1 SHEET

APPROVED FOR PUBLICATION

Harold J. Peterfeso — STATE DESIGN ENGINEER

06-24-02 — DATE

Washington State Department of Transportation

EFFECTIVE: APRIL 2, 2007 TO JANUARY 6, 2008

EFFECTIVE: APRIL 2, 2007 TO JANUARY 6, 2008

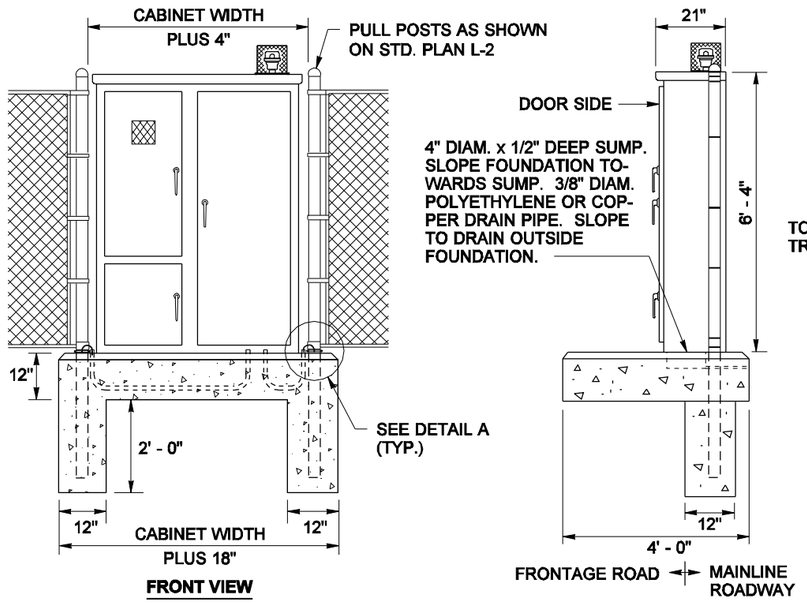

NOTE: INSTALL FOUNDATION AS SLAB SECTION UNLESS IDENTIFIED FOR CONSTRUCTION IN FENCE LINE IN CONTRACT PLANS.

INSTALLATION DETAIL

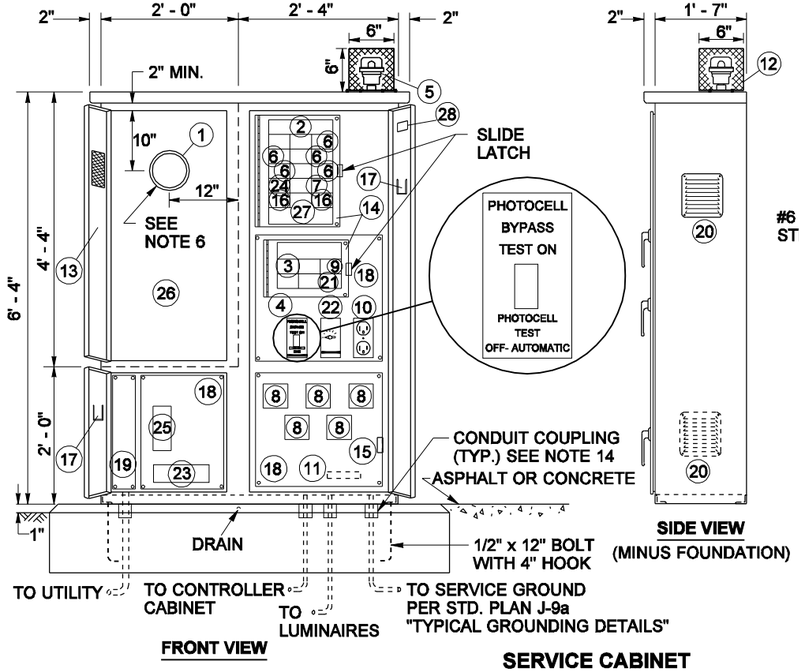

SERVICE CABINET

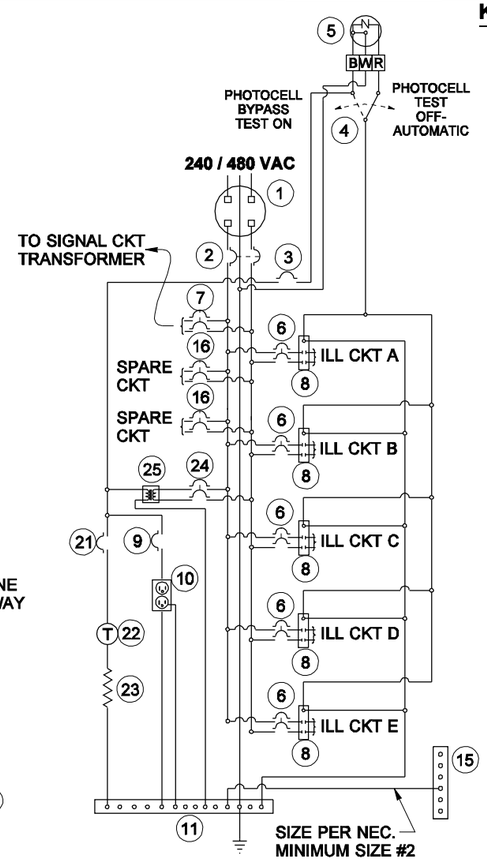

WIRING SCHEMATIC

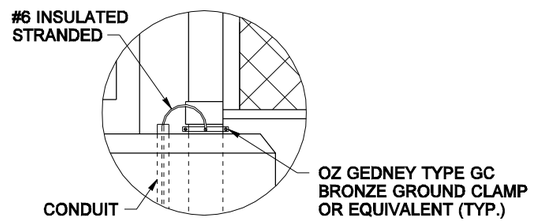

DETAIL A

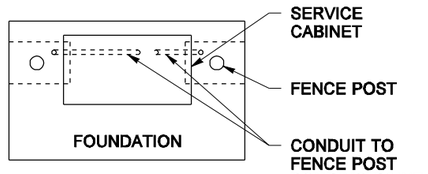

PLAN VIEW

KEY

1. METER BASE PER SERVING UTILITY REQUIREMENTS. AS A MINIMUM, THE METER BASE SHALL BE SAFETY SOCKET BOX WITH FACTORY INSTALLED TEST BYPASS FACILITY THAT MEETS THE REQUIREMENTS OF EUSERC DRAWING 305.
2. MAIN BREAKER (SEE BREAKER SCHEDULE)
3. PHOTOCELL BREAKER (SPST 15 AMP - 120/240 VOLT)
4. TEST SWITCH (SPDT SNAP ACTION, POSITIVE CLOSE 15 AMP - 120/277 VOLT "T" RATED)
5. PHOTOELECTRIC CONTROL, STD. SPEC. 9 - 29.11(2)
6. BRANCH BREAKER (SEE BREAKER SCHEDULE)
7. SIGNAL TRANSFORMER BREAKER (SEE BREAKER SCHEDULE)
8. CONTACTOR (SEE BREAKER SCHEDULE)
9. RECEPTACLE BREAKER (SPST 20 AMP - 120/240 VOLT)
10. RECEPTACLE, GROUNDED (GFCI 20 AMP - 125 VOLT)
11. NEUTRAL BUSS, 14 LUG COPPER
12. PHOTOCELL ENCLOSURE - ENCLOSURE TO BE FABRICATED FROM 5/8" EXPANDED STEEL MESH WITH WELDED SEAMS AND MOUNTING FLANGES. HOT DIP GALVANIZED AFTER FABRICATION. TYPE 5052 - H32 ALUMINUM WITH 5/8" x 5/8" OPENINGS EQUIVALENT TO 5/8" EXPANDED STEEL MESH MAY BE USED AS ALTERNATIVE MATERIAL. SEE PHOTOCELL ENCLOSURE MOUNTING DETAILS, STANDARD PLAN J-3b.
13. HINGED FRONT FACING DOOR WITH 4" x 4" MIN. POLISHED WIRE GLASS WINDOW.
14. HINGED DEAD FRONT WITH 1/4 TURN FASTENERS OR SLIDE LATCH
15. CABINET MAIN BONDING JUMPER. BUSS SHALL BE 4 LUG TINNED COPPER. SEE CABINET MAIN BONDING JUMPER DETAIL, STANDARD PLAN J-3b.
16. SPARE BRANCH BREAKER (DPST 20AMP- 240/480 VOLT)
17. METAL WIRING DIAGRAM HOLDER
18. REMOVABLE EQUIPMENT MOUNTING PAN
19. 6" x 6" MIN. UNDERGROUND FEED - SERVICE WIREWAY (LEFT REAR CORNER)
20. SCREENED VENTS, 2 REQUIRED, 1 EACH SIDE, LOUVERED PLATES
21. HEATER BREAKER (SPST 15 AMP - 120/240 VOLT)
22. THERMOSTAT, 40°F CLOSURE - 3 DIFFERENTIAL
23. STRIP HEATER (100 WATT NOMINAL), WITH TERMINAL STRIP COVER
24. TRANSFORMER BREAKER (DPST 15 AMP - 480 VOLT)
25. DRY TRANSFORMER (480/120 VOLT) 3 KVA COPPER BUSSED AND COPPER WOUND
26. RESERVED FOR METER, CURRENT TRANSFORMER AND/OR DISCONNECT SWITCH AS REQUIRED BY THE UTILITY
27. 24 CIRCUIT PANEL BOARD - MINIMUM SIZE WITH SEPARATE MAIN BREAKER.
28. LABEL CABINET WITH BUSSWORK RATING

GENERAL NOTES

200 AMP TYPE 240/480 1ø SERVICE CABINET

1. SEE STD. SPECIFICATION 9-29.24, SERVICE CABINETS.
2. HINGES SHALL HAVE STAINLESS STEEL OR BRASS PINS.
3. CABINETS SHALL BE RATED NEMA 3R AND SHALL INCLUDE TWO RAIN TIGHT VENTS.
4. METERING EQUIPMENT DOORS SHALL BE PAD LOCKABLE. EACH DOOR SHALL BE GASKETED. INSTALL BEST CX CONSTRUCTION CORE ON BOTTOM LEFT AND RIGHT DOORS. SEE DOOR HINGE DETAIL, STD. PLAN J-3b; CONCEALED HEAVY DUTY STAINLESS STEEL LIFT OFF HINGES ARE ALLOWED AS AN ALTERNATIVE. UPPER LEFT DOOR SHALL HAVE 3 HINGES, LOWER LEFT DOOR SHALL HAVE 2 HINGES, AND RIGHT DOOR SHALL HAVE 3 HINGES. LOWER DOOR SHALL HAVE A TWO POSITION DOOR STOP ASSEMBLY.
5. THE FOLLOWING EQUIPMENT WITHIN THE SERVICE ENCLOSURE SHALL HAVE AN APPROPRIATELY ENGRAVED PHENOLIC NAME PLATE ATTACHED WITH SCREWS OR RIVETS: KEY NUMBERS 2, 3, 4, 6, 7, 8, 9, 16, 21 AND 25. KEY NUMBER 4 NAME PLATE SHALL READ: "PHOTOCELL BYPASS TEST ON" AND "PHOTOCELL TEST OFF- AUTOMATIC". SEE SERVICE CABINET DETAIL.
6. METERING ARRANGEMENTS VARY WITH DIFFERENT SERVING UTILITIES. THE UTILITY MAY REQUIRE METER BASE MOUNTING IN THE ENCLOSURE, ON THE SIDE, OR ON THE BACK OF THE ENCLOSURE. THE UTILITY MAY REQUIRE THE DIMENSION BETWEEN THE DOOR AND THE FRONT OF THE SAFETY SOCKET BOX TO BE LESS THAN THE 11 INCHES SHOWN IN THE LEFT SIDE- SAFETY SOCKET BOX MOUNTING DETAIL, SEE STD. PLAN J-3b. THE CONTRACTOR SHALL VERIFY THE SERVING UTILITY'S REQUIREMENTS PRIOR TO FABRICATION OF AND INSTALLING THE SERVICE EQUIPMENT.
7. THE DIMENSIONS SHOWN ARE MINIMUM AND SHALL BE ADJUSTED TO ACCOMMODATE THE VARIOUS SIZES OF EQUIPMENT INSTALLED.
8. ALL BUSSWORK SHALL BE HIGH GRADE COPPER AND SHALL EQUAL OR EXCEED THE MAIN BREAKER RATING. ALL BREAKERS SHALL BOLT ONTO THE BUSSWORK. JUMPERING OF BREAKERS SHALL NOT BE ALLOWED. BUSSWORK SHALL ACCOMMODATE ALL FUTURE EQUIPMENT AS SHOWN IN THE BREAKER SCHEDULE.
9. THE PHOTOCELL UNIT SHALL BE CENTERED IN THE PHOTOCELL ENCLOSURE TO PERMIT 360 DEGREE ROTATION OF THE PHOTOCELL WITHOUT REMOVAL OF THE PHOTOCELL UNIT OR THE PHOTOCELL ENCLOSURE.
10. ALL INTERNAL WIRE RUNS SHALL BE IDENTIFIED WITH "TO - FROM" CODED TAGS LABELED WITH THE CODE LETTERS AND/OR NUMBERS SHOWN ON THE SCHEDULES. APPROVED PVC OR POLYOLEFIN WIRE MARKING SLEEVES SHALL BE USED.
11. ALL NUTS, BOLTS, AND WASHERS USED FOR MOUNTING PHOTOCELL ENCLOSURE SHALL BE STAINLESS STEEL.
12. A 1% TOLERANCE IS ALLOWED FOR ALL DIMENSIONS.
13. SEE PLANS FOR BREAKER SCHEDULE.
14. INSTALL CONDUIT COUPLINGS ON ALL CONDUITS. PLACE COUPLINGS FLUSH WITH TOP OF CONCRETE FOUNDATION.
15. SEAL CABINET TO FOUNDATION WITH A 1/2" BEAD OF SILICONE. APPLY SILICONE TO DRY SURFACE ONLY.
16. THE METER BASE PORTION OF THIS SERVICE WAS DESIGNED TO MEET METERING PORTION OF EUSERC DRAWING 309 REQUIREMENTS.



EXPIRES MAY 5, 2005

NOTE: THIS PLAN IS NOT A LEGAL ENGINEERING DOCUMENT BUT AN ELECTRONIC DUPLICATE. THE ORIGINAL, SIGNED BY THE ENGINEER AND APPROVED FOR PUBLICATION, IS KEPT ON FILE AT THE WASHINGTON STATE DEPARTMENT OF TRANSPORTATION. A COPY MAY BE OBTAINED UPON REQUEST.

SERVICE CABINET TYPE E (0 - 200 AMP TYPE 240/480 SINGLE PHASE)
STANDARD PLAN J-3d

SHEET 1 OF 1 SHEET

DATE	REVISION	BY
09/2003	REVISED KEY NOTE 16	MHG

APPROVED FOR PUBLICATION

Harold J. Peterfeso — STATE DESIGN ENGINEER — *11-05-03* — DATE

Washington State Department of Transportation

EFFECTIVE: APRIL 2, 2007 TO JANUARY 6, 2008

EFFECTIVE: APRIL 2, 2007 TO JANUARY 6, 2008

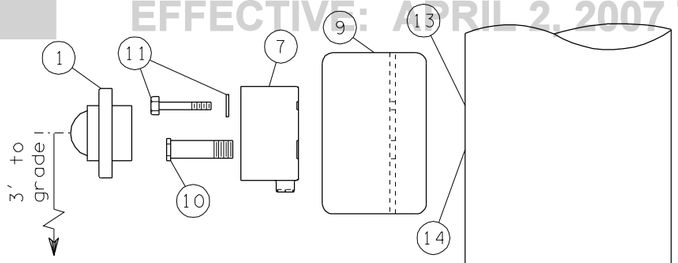

METAL POLE INSTALLATION
PPB-M
(Pedestrian PushButton - Metal Pole)

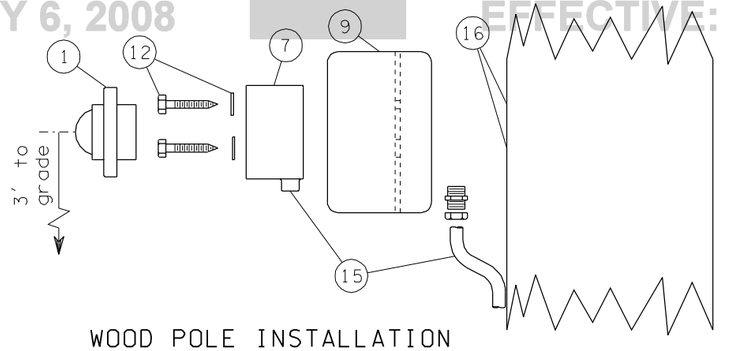

WOOD POLE INSTALLATION
PPB-W
(Pedestrian PushButton - Wood Pole)

(Bottom feed shown)

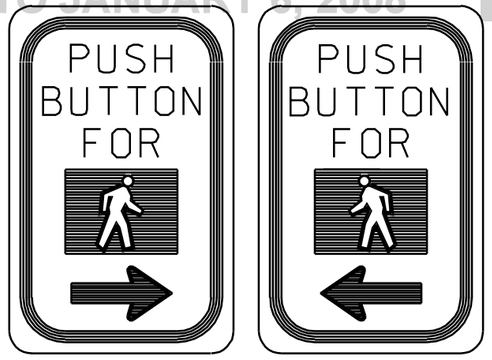

R10-4001 R10-4002

NOTE:
When "PPB-MR" or "PPB-WR" are specified in the contract, the arrow shall be installed in the opposite direction than as shown for "PPB-M" or "PPB-W"

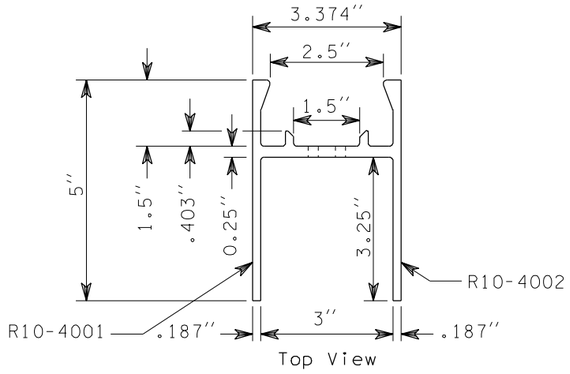

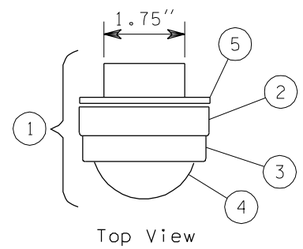

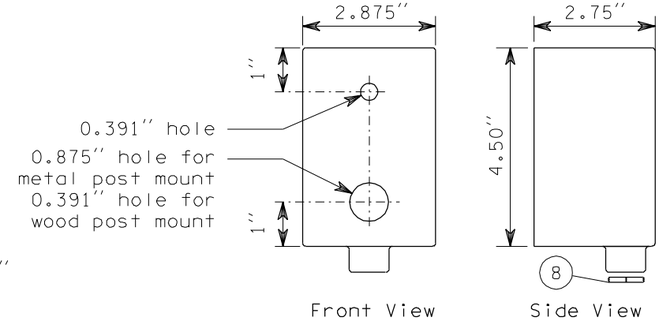

CAST ALUMINUM CONDULET

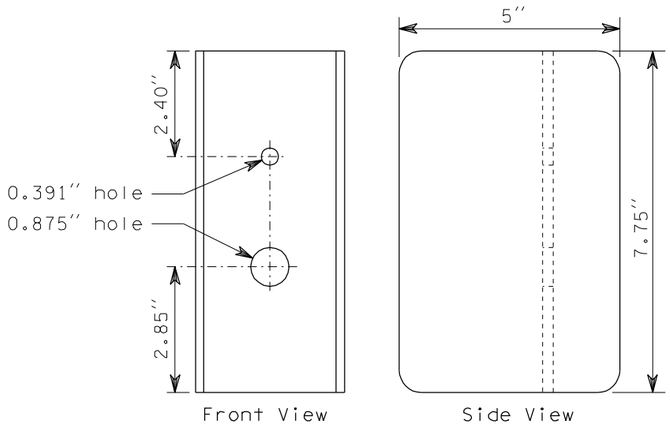

ALUMINUM 'H' EXTRUSION

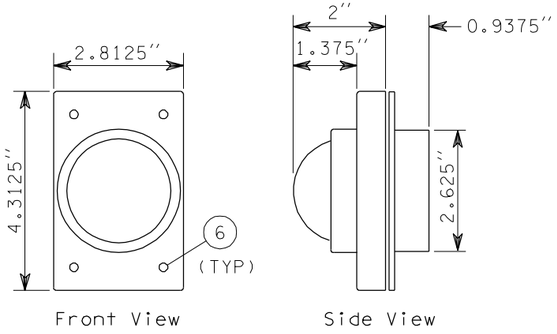

PUSHBUTTON SWITCH ASSEMBLY

KEY

1. Pushbutton switch assembly
2. Cast metal housing
3. Protective collar
4. Pushbutton switch
5. Gasket
6. Stainless steel fastener
7. Cast aluminum condulet
8. Aluminum plug with 1/8" drilled weep hole. On timber pole installation, remove plug for wire entrance and drill weep hole in condulet.
9. Aluminum 'H' extrusion
10. Chase nipple - 7/8" hex head x 1/2" pipe thread x 2 1/2" long
11. 3/8" - 16 X 2 1/2" stainless steel bolt with washer
12. 3/8" X 4" lag bolt with washer
13. Drill and tap shaft for 3/8" bolt
14. Drill and tap shaft for 1/2" nipple
15. Conduit and fittings as required for timber pole installation; reverse condulet and conduit for top feed
16. Drill pilot hole for 3/8" lag bolt

PEDESTRIAN PUSHBUTTON DETAILS



NOTE: THIS PLAN IS NOT A LEGAL ENGINEERING DOCUMENT BUT AN ELECTRONIC DUPLICATE. THE ORIGINAL, SIGNED BY THE ENGINEER AND APPROVED FOR PUBLICATION, IS KEPT ON FILE AT THE WASHINGTON STATE DEPARTMENT OF TRANSPORTATION. A COPY MAY BE OBTAINED UPON REQUEST.

STANDARD PLAN J-5

APPROVED FOR PUBLICATION

Clifford E. Mansfield — STATE DESIGN ENGINEER
08-01-97 — DATE

WASHINGTON STATE DEPARTMENT OF TRANSPORTATION
OLYMPIA, WASHINGTON

EFFECTIVE: APRIL 2, 2007 TO JANUARY 6, 2008

EFFECTIVE: APRIL 2, 2007 TO JANUARY 6, 2008

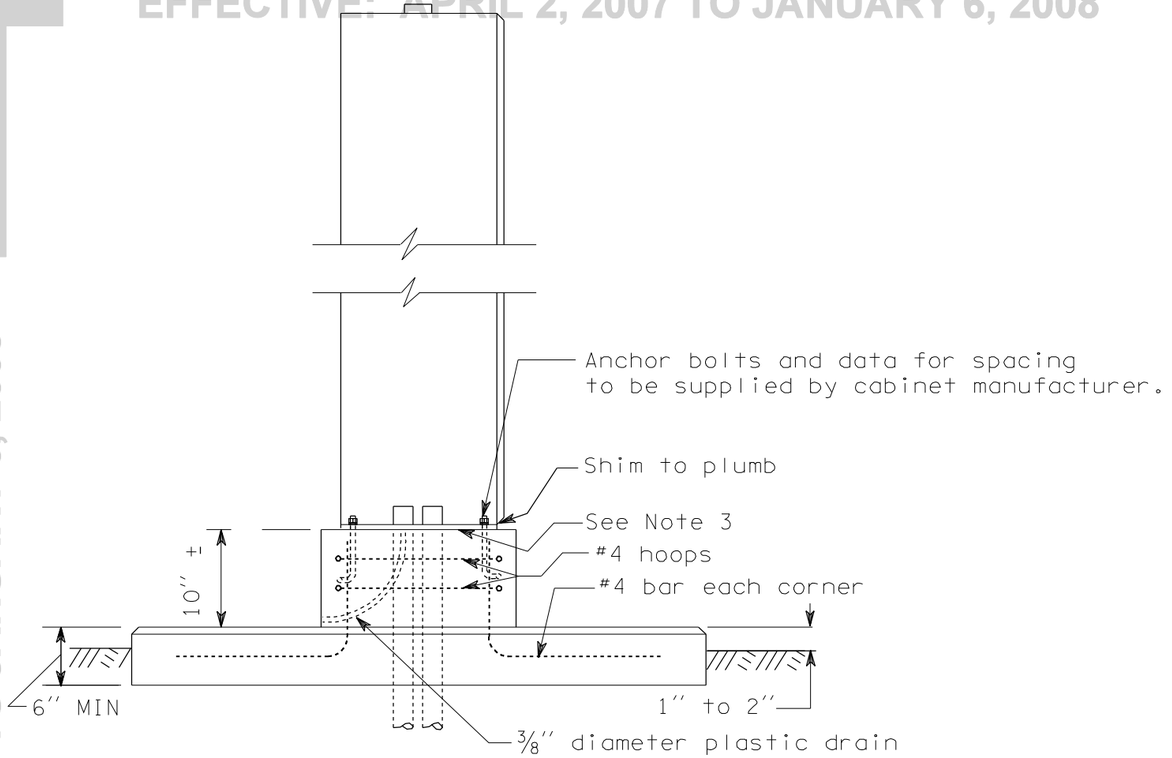

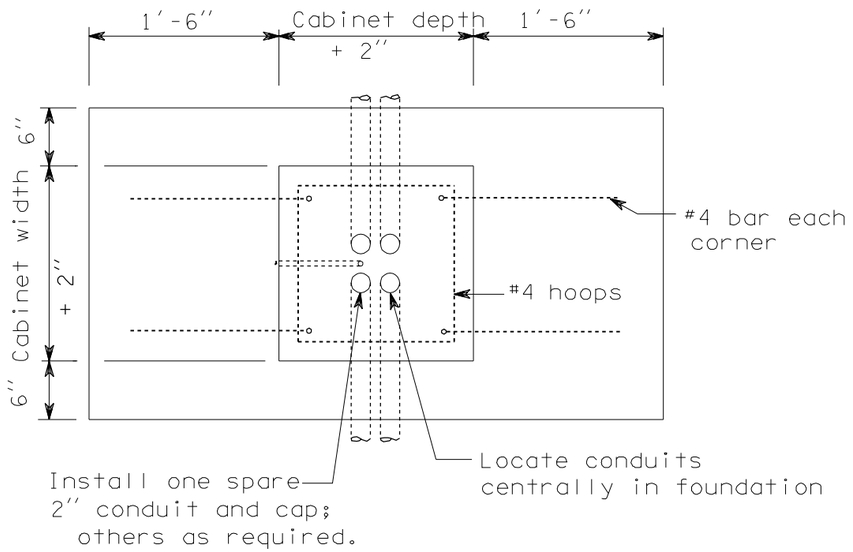

PAD MOUNT

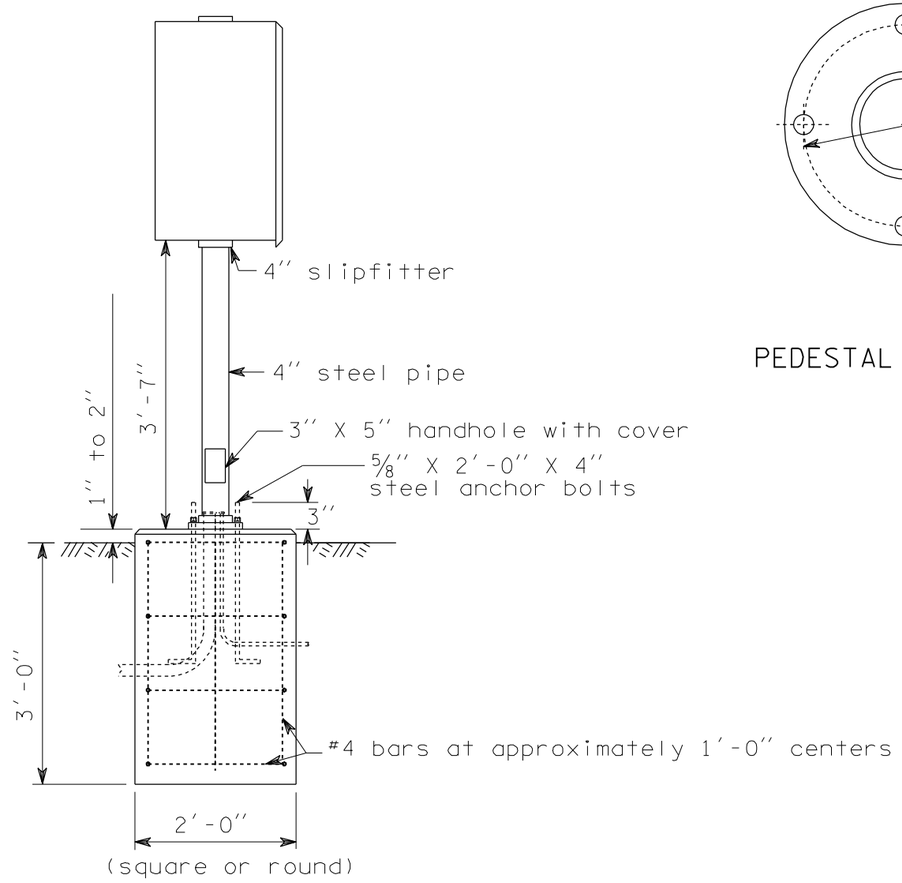

PEDESTAL MOUNT

NOTES

1. Where pad or pedestal mounts are located in a sidewalk, construct mount top flush with sidewalk grade, omitting chamfer where top and sidewalk abut.

2. Pad mount design is typical.

3. Place a silicone seal between the cabinet foundation and the cabinet for the pad mount design.

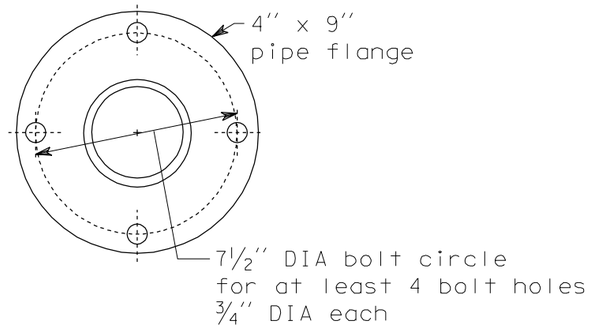

PEDESTAL BASE DETAILS



EXPIRES JUNE 4, 1999

NOTE: THIS PLAN IS NOT A LEGAL ENGINEERING DOCUMENT BUT AN ELECTRONIC DUPLICATE. THE ORIGINAL, SIGNED BY THE ENGINEER AND APPROVED FOR PUBLICATION, IS KEPT ON FILE AT THE WASHINGTON STATE DEPARTMENT OF TRANSPORTATION. A COPY MAY BE OBTAINED UPON REQUEST.

CABINET
FOUNDATION DETAILS

STANDARD PLAN J-6c

APPROVED FOR PUBLICATION

Clifford E. Mansfield 04-24-98

DEPUTY STATE DESIGN ENGINEER DATE

WASHINGTON STATE DEPARTMENT OF TRANSPORTATION
OLYMPIA, WASHINGTON

EFFECTIVE: APRIL 2, 2007 TO JANUARY 6, 2008

EFFECTIVE: APRIL 2, 2007 TO JANUARY 6, 2008

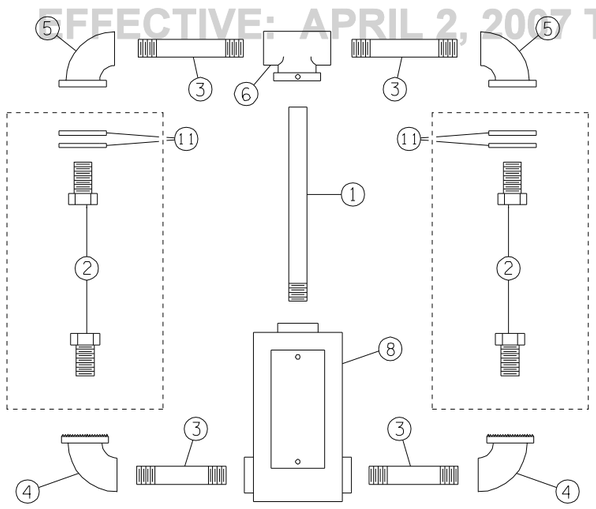

SIDE MOUNT
TYPE A - PED.
TYPE H - VEHICLE

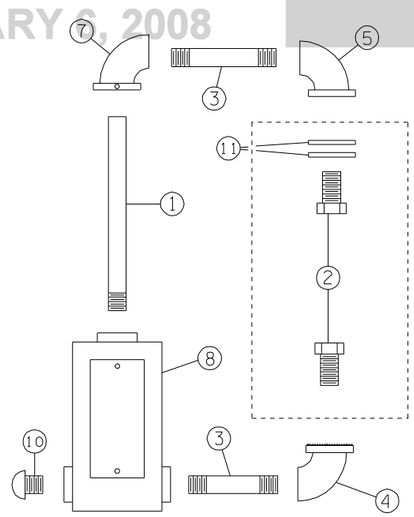

SIDE MOUNT
TYPE B - PED.
TYPE K - VEHICLE

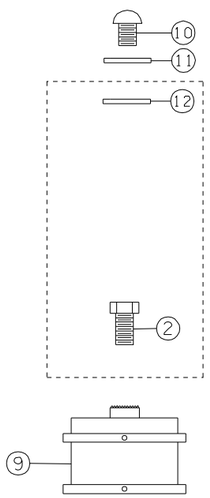

TOP MOUNT
TYPE D - PED.
OR VEHICLE

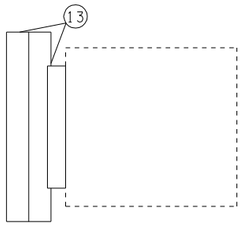

SIDE MOUNT
TYPE E
(NEON GRID OR SIMILAR SIZE
INCANDESCENT PEDESTRIAN HEAD)

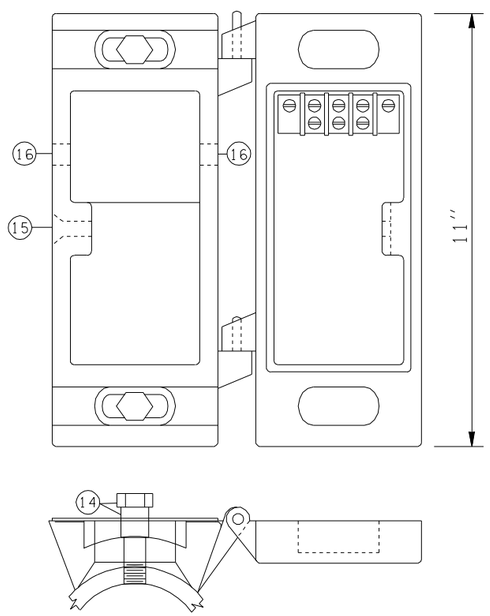

TYPE E MOUNTING DETAILS

KEY

1. CENTER PIPE
2. LOCKNIPPLE
3. NIPPLE
4. SERRATED ELBOW
5. SERRATED OR FLANGED ELBOW
6. REAMED TEE WITH SET SCREW
7. REAMED ELBOW WITH SET SCREW
8. BRONZE TERMINAL COMPARTMENT WITH:
   - GASKETED COVER
   - FASTENERS
   - WIRE LEADS
   - MOUNTING SADDLE FOR SIDE MOUNTS
   - 1/4" DIA DRAIN HOLE
   - 12 POSITION TERMINAL STRIP
   - WIREWAY FOR SIDE MOUNTS
9. BRONZE COLLAR, 4 1/4" I.D. WITH SET SCREWS
10. ORNAMENT CAP
11. GASKET AND WASHER
12. CONDUIT LOCKNUT
13. TYPE E HINGE MOUNTING
14. FASTENER WITH SPACER
    - 1/2" LAG SCREWS ON WOOD POLE
    - 1/2" BOLTS TAPPED TO METAL POLE
15. FLATHEAD SOCKET BOLT
16. 1/2" INSERT HOLE FOR EXTERNAL WIRE ENTRANCE REQUIRED ON TIMBER POLE MOUNTINGS ONLY.

EFFECTIVE: APRIL 2, 2007 TO JANUARY 6, 2008

NOTES:

1. SEE CONTRACT FOR HEAD TYPE, MOUNTING HEIGHT AND ORIENTATION.
2. ALL NIPPLES, FITTINGS AND CENTER PIPES SHALL BE 1 1/2" DIA NOMINAL TRADE SIZE (NEC).
3. INSTALL NEOPRENE GASKET OUTSIDE HEAD WHEN FLANGED ELBOWS ARE SUPPLIED.

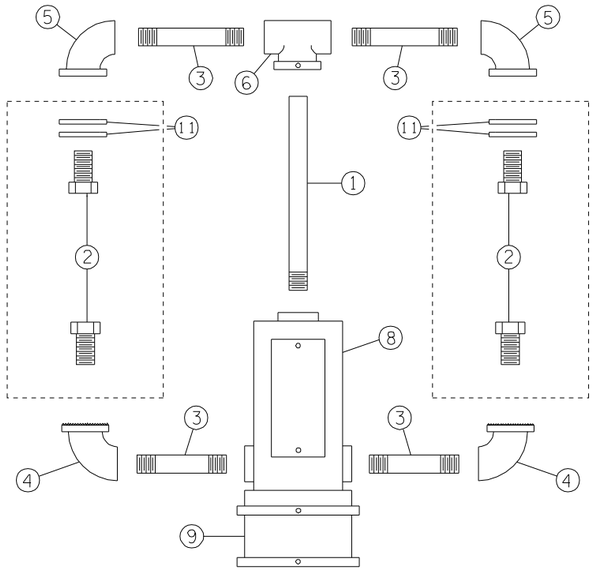

TOP MOUNT
TYPE C - PED.
TYPE F - VEHICLE



EXPIRES JUNE 4, 1999

NOTE: THIS PLAN IS NOT A LEGAL ENGINEERING DOCUMENT BUT AN ELECTRONIC DUPLICATE. THE ORIGINAL, SIGNED BY THE ENGINEER AND APPROVED FOR PUBLICATION, IS KEPT ON FILE AT THE WASHINGTON STATE DEPARTMENT OF TRANSPORTATION. A COPY MAY BE OBTAINED UPON REQUEST.

SIGNAL HEAD MOUNTING DETAILS POLE & POST TOP MOUNTINGS

STANDARD PLAN J-6f

APPROVED FOR PUBLICATION

Clifford E. Mansfield 04-24-98
DEPUTY STATE DESIGN ENGINEER DATE

WASHINGTON STATE DEPARTMENT OF TRANSPORTATION
OLYMPIA, WASHINGTON

EFFECTIVE: APRIL 2, 2007 TO JANUARY 6, 2008

EFFECTIVE: APRIL 2, 2007 TO JANUARY 6, 2008

KEY:

1. End cap
2. Conduit locknut, 1½" DIA
3. Locknipple, 1½" DIA
4. Steel washer
5. Neoprene gasket
6. Bronze serrated ell fitting with:
   - 3/8 " stainless steel through bolt and nuts
   - Three set screws at slipfitter connection
   - Three allen head stainless steel set screws at conduit nipple connection
7. Serrated ring with pins
8. Hex locknut with:
   - Two allen head stainless steel set screws
   - Pin receptacles
9. Conduit nipple, 1 1/2 " DIA
10. Hex locknut, 1½" DIA
11. Mounting assembly
12. Bronze elevator plumbizer with ⅜" stainless steel through bolt, washers, and two nuts
13. Aluminum arm with set screw
14. Slotted tube with closure strip
15. Tube clamp, 2½" ID, MIN
16. Internally threaded clamp assembly with:
    - Two set screws
    - 1/2 " x 0.045" stainless steel bands
    - Screw buckles, 7/16 " with swivels, nuts, and washers
    - Band clips with allen head stainless steel set screws
17. Bronze messenger hanger with:
    - ½" DIA J bolts
    - Cable lock bar
    - Rivet
    - Cotter key
18. Bronze internally threaded wire entrance with:
    - Bushing insert
    - Allen head stainless steel set screw
19. Bronze balance adjuster
20. Multi-head mounting assembly
21. Spider assembly
22. Serrated ring with no pins

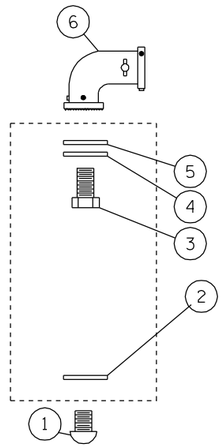

ARM MOUNT
TYPE L

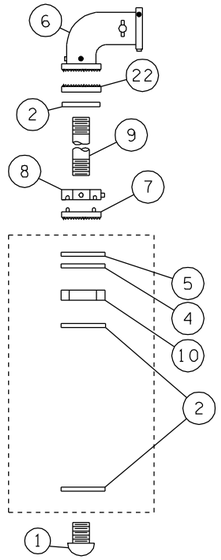

ARM MOUNT
TYPE LE
(TYPE L WITH
EXTENSION FITTINGS)

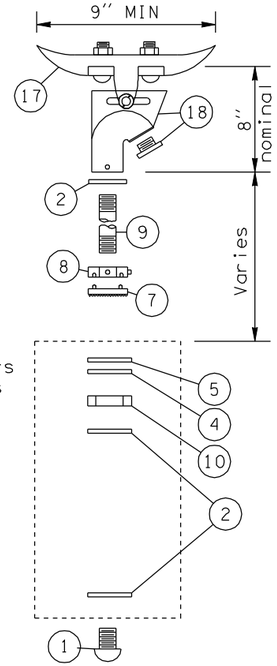

SPAN WIRE
TYPE P (1 HEAD)

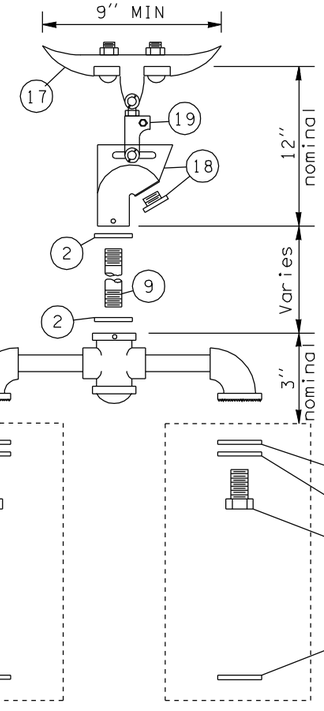

SPAN WIRE
TYPE Q (2 HEADS)
TYPE R (3 HEADS)
TYPE S (4 HEADS)

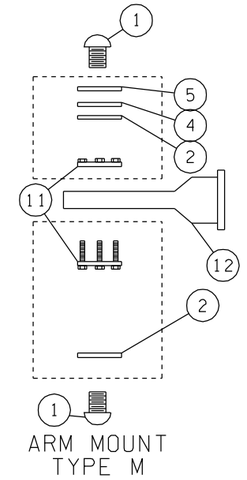

ARM MOUNT
TYPE M

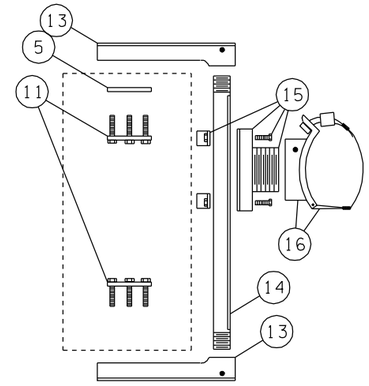

ARM MOUNT
TYPE N

NOTES:

1. Type M mounting shall have "O" ring groove and seal top and bottom at signal attachment.
2. Type M mounting for conventional heads shall have a 2" diameter opening at the signal attachment.
3. Type M mounting for optically programmed heads shall have a 3½" DIA opening at the signal attachment.
4. Type N mounting with optically programmed heads shall be installed with 14" nominal arms.
5. See Standard Plan J-6h for tether wire, and backplate requirements.

R. SCOTT ZELLER
STATE OF WASHINGTON
28680
REGISTERED
PROFESSIONAL ENGINEER

EXPIRES MAY 5, 2003

NOTE: THIS PLAN IS NOT A LEGAL ENGINEERING DOCUMENT BUT AN ELECTRONIC DUPLICATE. THE ORIGINAL, SIGNED BY THE ENGINEER AND APPROVED FOR PUBLICATION, IS KEPT ON FILE AT THE WASHINGTON STATE DEPARTMENT OF TRANSPORTATION. A COPY MAY BE OBTAINED UPON REQUEST.

SIGNAL HEAD MOUNTING DETAILS MAST ARM & SPAN WIRE MOUNTINGS

STANDARD PLAN J-6g

SHEET 1 OF 1 SHEET

DATE	REVISION	BY
11/2002	REV. KEY NOTES 6, 9, 16 & 18; REV. NOTE 5; REV. SPAN WIRE TYPE P DETAIL	RG

APPROVED FOR PUBLICATION

Harold J. Peterfeso — STATE DESIGN ENGINEER — *12-12-02* — DATE

Washington State Department of Transportation

EFFECTIVE: APRIL 2, 2007 TO JANUARY 6, 2008

EFFECTIVE: APRIL 2, 2007 TO JANUARY 6, 2008

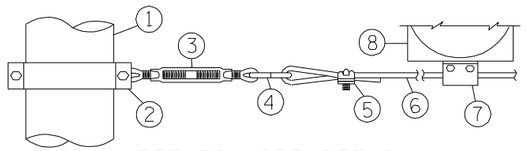

TETHER WIRE DETAIL

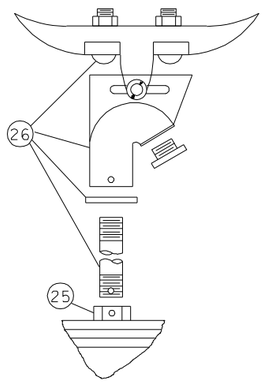

SPAN WIRE MOUNT

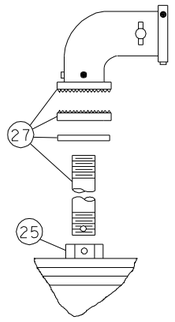

MAST ARM MOUNT

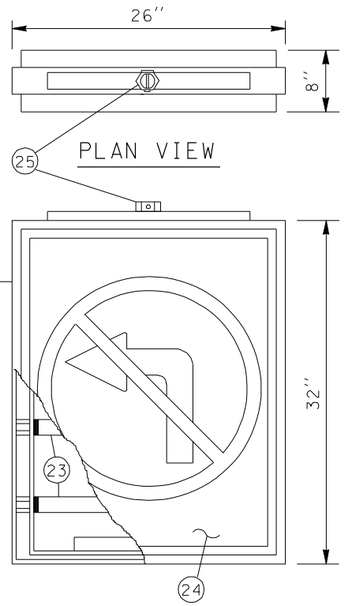

PLAN VIEW

ELEVATION

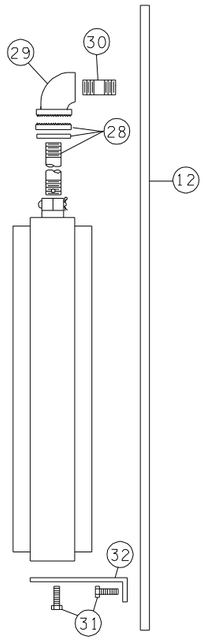

SIDE POLE MOUNT

INTERNALLY ILLUMINATED SIGN DETAILS

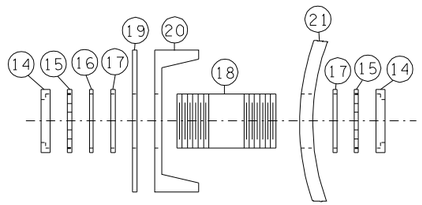

WIREWAY DETAIL

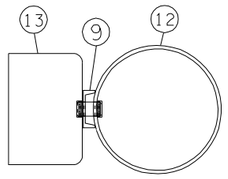

PLAN VIEW

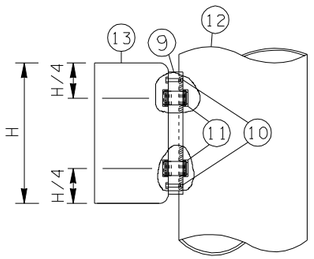

ELEVATION

CABINET MOUNTING DETAIL

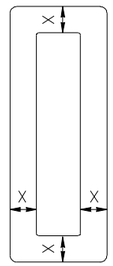

8" OR 12" SECTIONS

8" SECTION X = 8" ± ½"

12" SECTION X = 5½" ± ½"

BACKPLATE DETAIL

KEY:

1. METAL OR TIMBER POLE
2. 2" x 3/16" S.S. BAND WITH 2 EACH, 3/8-16NC x 3/4" STAINLESS STEEL HEX HEAD BOLT, LOCK WASHERS AND NUTS
3. 5/16", EYE AND EYE, TURNBUCKLE
4. S HOOK, 3/8" MILD STEEL
5. 1/8" WIRE ROPE CLAMP (U BOLT TYPE)
6. 1/8" STAINLESS STEEL TETHER WIRE
7. WIRE CLAMP WITH LEAD WIRE WRAP
8. SIGNAL HEAD
9. 6 X 8.2 LB/FT CHANNEL
10. 2 EACH, 1/2-20 NF X 2½" HEX HEAD BOLT, LOCK WASHER (DRILL AND TAP POLE TO ACCEPT)
11. WIREWAY (SEE DETAIL THIS SHEET)
12. METAL POLE
13. CABINET
14. END BUSHING
15. CONDUIT LOCKNUT
16. STEEL WASHER
17. WEATHERPROOF SEAL
18. 2" DIA x 4" NIPPLE UNLESS OTHERWISE NOTED
19. CABINET WALL DRILLED 1/8" OVERSIZE OF NIPPLE
20. CHANNEL DRILLED 1/8" OVERSIZE OF NIPPLE
21. POLE DRILLED 1/8" OVERSIZE OF NIPPLE
22. 6063 EXTRUDED ALUMINUM FRAME
23. 4 EACH, F24T12/CW FLOURESCENT TUBES
24. TRANSLUCENT PLEXIGLASS SIGN FACE
25. 1½" CAST IRON HUB WITH 5/16" PIN AND COTTER KEY
26. SEE KEY 2,9,17, AND 18, STANDARD PLAN "SIGNAL HEAD MOUNTING DETAILS MAST ARM AND SPAN WIRE MOUNTINGS" .
27. SEE KEY 2,6,9 AND 22, STANDARD PLAN "SIGNAL HEAD MOUNTING DETAILS MAST ARM AND SPAN WIRE MOUNTINGS" .
28. SEE KEY 2,9 AND 22, STANDARD PLAN "SIGNAL HEAD MOUNTING DETAILS MAST ARM AND SPAN WIRE MOUNTINGS" .
29. SERRATED 1½" ELBOW
30. 1½" DIA NIPPLE (DRILL AND TAP POLE TO ACCEPT)
31. 2 EACH, 1/2-20NF x 3/4" STAINLESS STEEL HEX HEAD BOLT AND LOCK WASHERS (DRILL AND TAP POLE TO ACCEPT
32. MOUNTING BRACKET

NOTES:

1. BACKPLATES SHALL BE INSTALLED WITH 6 STAINLESS STEEL SCREWS AND WASHERS.



EXPIRES JUNE 4, 1999

NOTE: THIS PLAN IS NOT A LEGAL ENGINEERING DOCUMENT BUT AN ELECTRONIC DUPLICATE. THE ORIGINAL, SIGNED BY THE ENGINEER AND APPROVED FOR PUBLICATION, IS KEPT ON FILE AT WASHINGTON STATE DEPARTMENT OF TRANSPORTATION. A COPY MAY BE OBTAINED UPON REQUEST.

MISCELLANEOUS SIGNAL DETAILS

STANDARD PLAN J-6h

APPROVED FOR PUBLICATION

Clifford E. Mansfield 04-24-98

DEPUTY STATE DESIGN ENGINEER — DATE

WASHINGTON STATE DEPARTMENT OF TRANSPORTATION
OLYMPIA, WASHINGTON

EFFECTIVE: APRIL 2, 2007 TO JANUARY 6, 2008

EFFECTIVE: APRIL 2, 2007 TO JANUARY 6, 2008

TYPE PPB, PS, & I STANDARD DETAILS

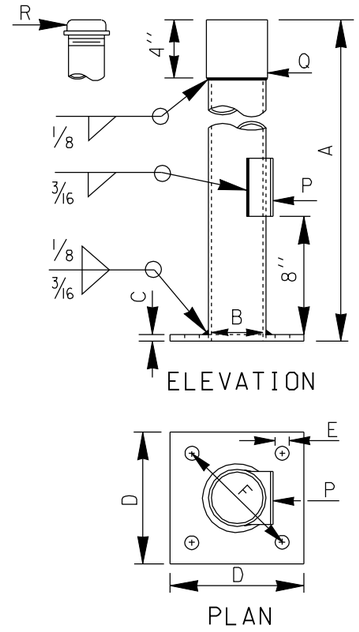

ELEVATION

PLAN

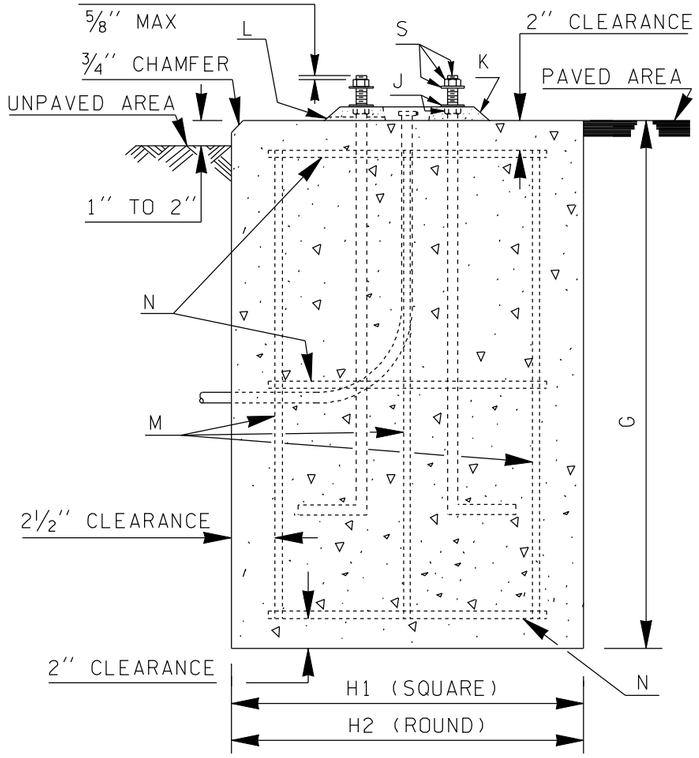

FOUNDATION DETAILS

ANCHOR BOLT, NUT, & WASHER SIZES		
MARK	STANDARD	DIMENSIONS
S	TYPE PPB	4 - 1/2'' DIA x 12'' x 2''
S	TYPE PS & I	4 - 3/4'' DIA x 30'' x 4''
S	TYPE FB & RM	3 - 3/4'' DIA x 30'' x 4''

SIGNAL STANDARD TYPE DESIGNATIONS

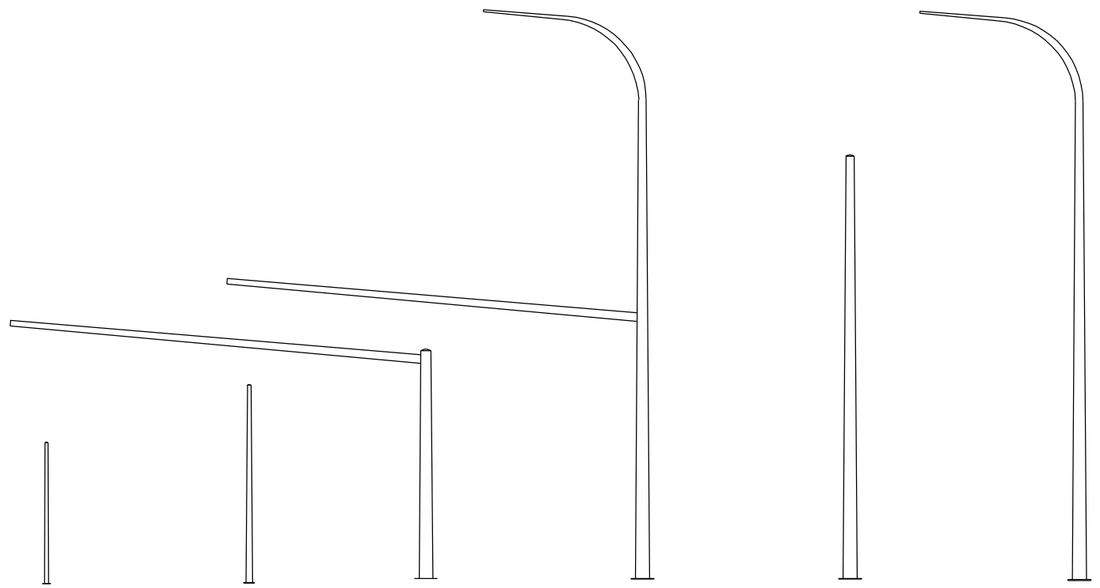

TYPE PPB PED. PUSH BUTTON POST | TYPE PS PED. HEAD STANDARD | TYPE I & RM VEHICLE HEAD AND RAMP METER STANDARD | TYPE FB FLASHING BEACON STANDARD | TYPE II MAST ARM STANDARD | TYPE III LIGHTING AND MAST ARM STANDARD | TYPE IV STRAIN POLE STANDARD | TYPE V LIGHTING AND STRAIN POLE STANDARD

TYPE PPB, PS, I, RM & FB STANDARD DIMENSION CHART						
MARK	ITEM	TYPE PPB	TYPE PS	TYPE I	TYPE RM	TYPE FB
A	HEIGHT	4''-6''	8'-0''	10'-0''	SEE SHEET 2	SEE SHEET 2
B	POLE BASE DIA	2 1/2''	*	*	*	*
C	PLATE THICKNESS	1/2''	1/2''	1/2''	SEE SHEET 2	SEE SHEET 2
D	PLATE WIDTH	5''	9''	9''	SEE SHEET 2	SEE SHEET 2
E	HOLE DIA	5/8''	1''	1''	SEE SHEET 2	SEE SHEET 2
F	BOLT CIRCLE	4 1/2''	8 1/2''	8 1/2''	SEE SHEET 2	SEE SHEET 2
G	FOUNDATION DEPTH	1'-6''	3'-0''	3'-0''	3'-0''	3'-0''
H1	FOUNDATION WIDTH	1'-6''	2'-0''	2'-0''	2'-0''	2'-0''
H2	FOUNDATION DIA	2'-0''	2'-3''	2'-3''	2'-3''	2'-3''
J	NUT & WASHER	Four 1/2''	3/4''	3/4''	3/4''	3/4''
K	GROUT PAD THICKNESS	NONE	**	**	SEE SHEET 2	SEE SHEET 2
L	PLASTIC DRAIN TUBE DIA	NONE	3/8''	3/8''	3/8''	3/8''
M	VERTICAL RE-BAR	NONE	Eight #4	Eight #4	Eight #4	Eight #4
N	HORIZ. RE-BAR HOOP	NONE	Three #4	Three #4	Three #4	Three #4
P	HANDHOLE SIZE	NONE	3 1/2'' x 4''	3 1/2'' x 4''	3 1/2'' x 4''	3 1/2'' x 4''
Q	SLIPFITTER DIA (I.D.)	NONE	4''	4''	4''	4''
R	CAP DIA	2 1/2''	NONE	NONE	NONE	NONE

* TAPERED ROUND OR OCTAGONAL SHAFT, 11 GAGE, 4'' OD AT SLIPFITTER WELD. TAPER = 0.14 INCHES/FT.

** LEVELING NUT HEIGHT 1'' MAXIMUM.
LEVELING NUTS NOT REQUIRED FOR TYPE PPB STANDARD

TOBY D. RICKMAN
STATE OF WASHINGTON
24655
REGISTERED
PROFESSIONAL ENGINEER

EXPIRES OCTOBER 26, 2002

NOTE: THIS PLAN IS NOT A LEGAL ENGINEERING DOCUMENT BUT AN ELECTRONIC DUPLICATE. THE ORIGINAL, SIGNED BY THE ENGINEER AND APPROVED FOR PUBLICATION, IS KEPT ON FILE AT THE WASHINGTON STATE DEPARTMENT OF TRANSPORTATION. A COPY MAY BE OBTAINED UPON REQUEST.

SIGNAL STANDARD TYPE DESIGNATIONS AND TYPE PPB, PS, I, RM, & FB DETAILS

STANDARD PLAN J-7a

SHEET 1 OF 2 SHEETS

APPROVED FOR PUBLICATION

Harold J. Peterfeso — STATE DESIGN ENGINEER — *09-12-01* DATE

Washington State Department of Transportation

DATE	REVISION	BY
7/01	WELDING SYMBOL SIZES	MHG

EFFECTIVE: APRIL 2, 2007 TO JANUARY 6, 2008

EFFECTIVE: APRIL 2, 2007 TO JANUARY 6, 2008

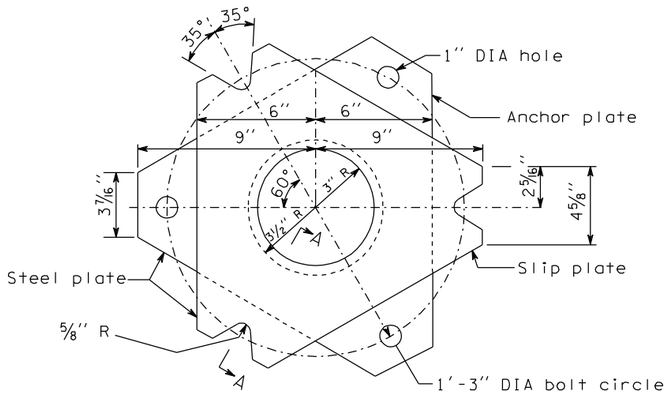

SLIP/ANCHOR PLATES DETAIL

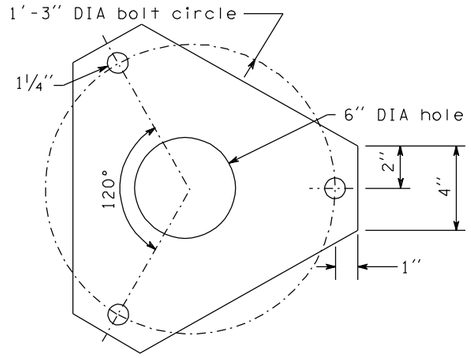

KEEPER PLATE

Place between pole base plate and slip plate on top of middle washers.

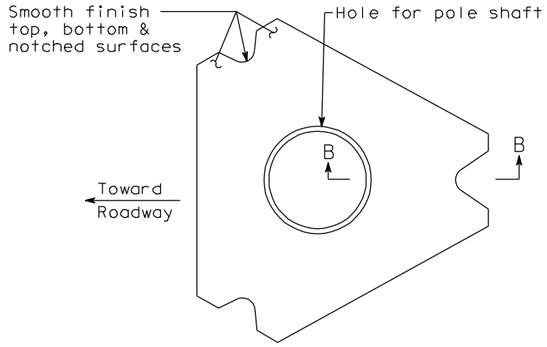

BASE PLATE

See Slip Anchor Plate Detail for dimensions not shown. Match Slip Plate dimensions.

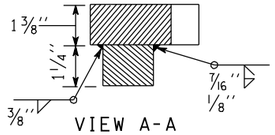

VIEW A-A

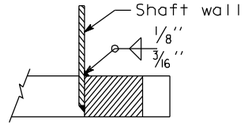

VIEW B-B

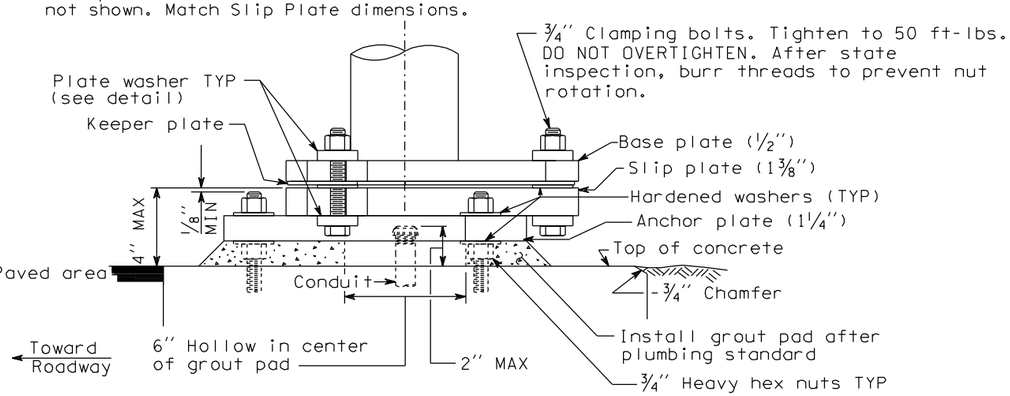

FLASHING BEACON AND RAMP METER BASE ELEVATION

See "FOUNDATION DETAIL" for other requirements.

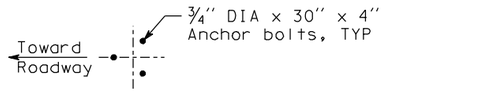

ANCHOR BOLT LAYOUT

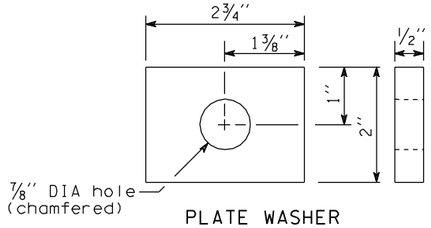

PLATE WASHER

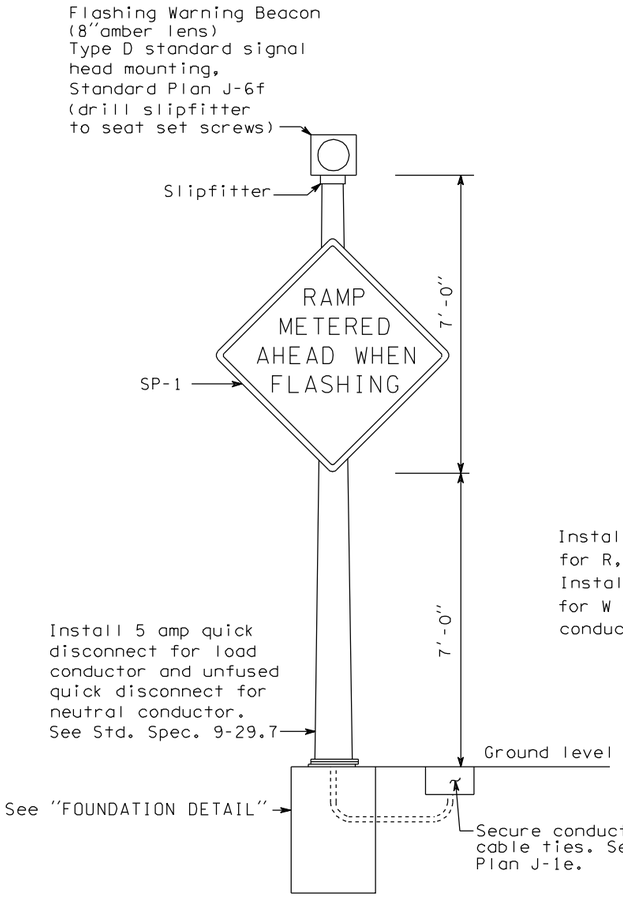

FLASHING BEACON DETAIL

Shaft, slipfitter, welds and handhole are the same as shown for Type 1 Standards, except shaft length is 14'.

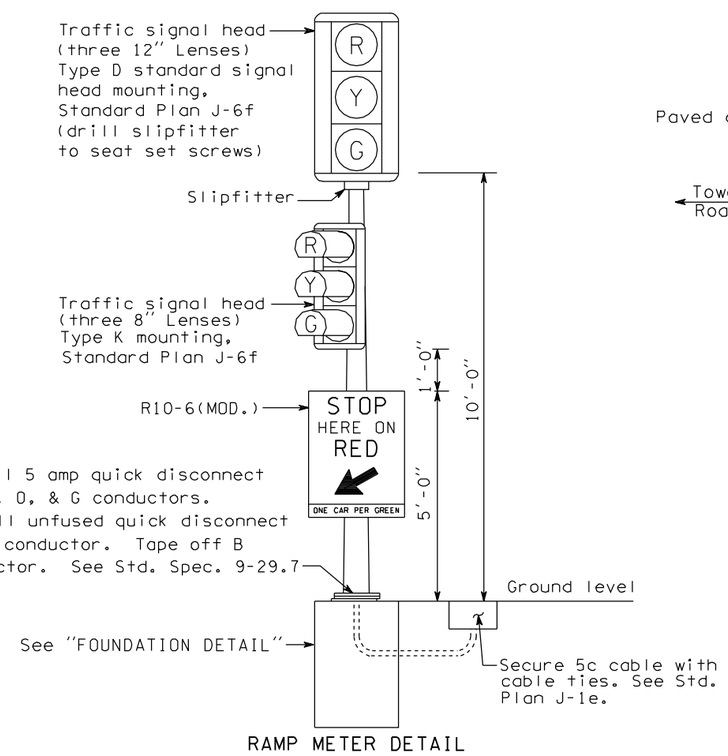

RAMP METER DETAIL

Shaft, slipfitter, welds and handhole are the same as shown for Type 1 Standards.

TOBY D. RICKMAN
STATE OF WASHINGTON
24655
REGISTERED
PROFESSIONAL ENGINEER

EXPIRES OCTOBER 26, 2002

NOTE: THIS PLAN IS NOT A LEGAL ENGINEERING DOCUMENT BUT AN ELECTRONIC DUPLICATE. THE ORIGINAL, SIGNED BY THE ENGINEER, AND APPROVED FOR PUBLICATION, IS KEPT ON FILE AT THE WASHINGTON STATE DEPARTMENT OF TRANSPORTATION. A COPY MAY BE OBTAINED UPON REQUEST.

SIGNAL STANDARD TYPE DESIGNATIONS AND TYPE PPB, PS, I, RM, & FB DETAILS

STANDARD PLAN J-7a

SHEET 2 OF 2 SHEETS

APPROVED FOR PUBLICATION

Harold J. Peterfeso — STATE DESIGN ENGINEER — *09-12-01* DATE

Washington State Department of Transportation

DATE	REVISION	BY
7/01	CORRECTED - FLASHING BEACON DETAIL	MHG

EFFECTIVE: APRIL 2, 2007 TO JANUARY 6, 2008

EFFECTIVE: APRIL 2, 2007 TO JANUARY 6, 2008

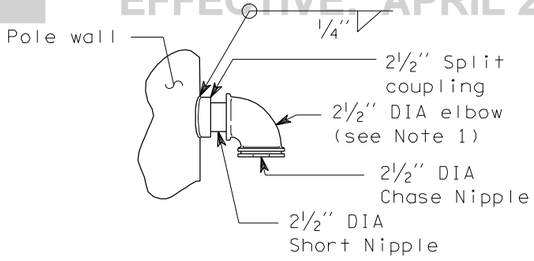

WIREWAY DETAIL

STRAIN POLE DIMENSION CHART

KEY	ITEM	POLE CLASS (Resultant Horizontal Tension) 1900 LB	2700 LB	3700 LB	4800 LB	5600 LB	6300 LB	7200 LB
	Pole gauge	3	3	3	1/0	1/0	1/0	1/0
A	Base plate width	15''	15''	17''	18''	18''	20''	20''
B	Anchor bolt circle diameter	16''	16''	19''	20''	20''	22''	22''
C	Pole base diameter	10''	12''	14''	14''	15''	16''	17''
D	Base plate thickness	1¾''	1¾''	1¾''	2''	2''	2''	2''
E	Anchor bolt size	1''x36''	1¼''x60''	1⅜''x60''	1½''x60''	1½''x60''	1¾''x66''	1¾''x66''
F	Anchor plate size	1''x3''x3''	1''x4''x4''	1''x4''x4''	1''x5''x5''	1''x5''x5''	1''x6''x6''	1''x6''x6''
G	Vertical steel number and size	Eight #5	Eight #6	Eight #7	Eight #7	Eight #8	Eight #8	Eight #9

NOTES

1. 2½'' diameter weatherhead may be substituted for the elbow and nipple assembly.
2. Pole shaft shall have 0.14''/ft taper.
3. See Standard Plan J-7d for details.
4. Handholes may be 6'' x 4'' oval or rectangle.

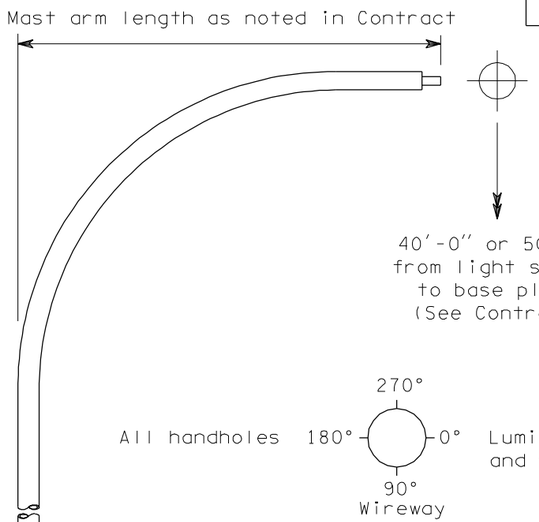

ATTACHMENT POINT ANGLES

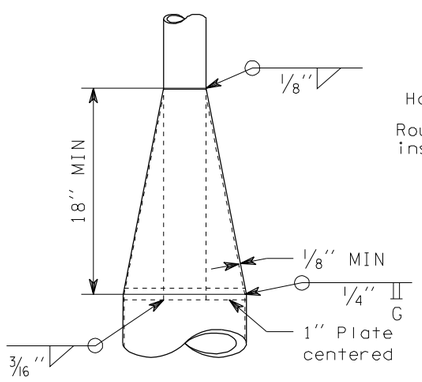

CONE SECTION DETAIL

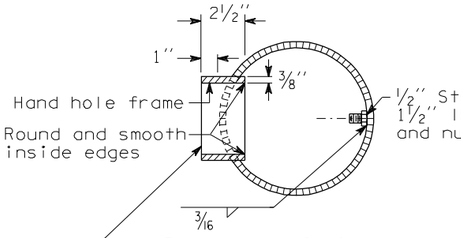

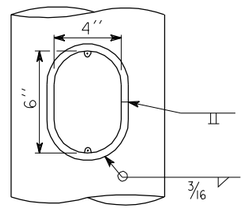

HANDHOLE DETAIL
See Note 4

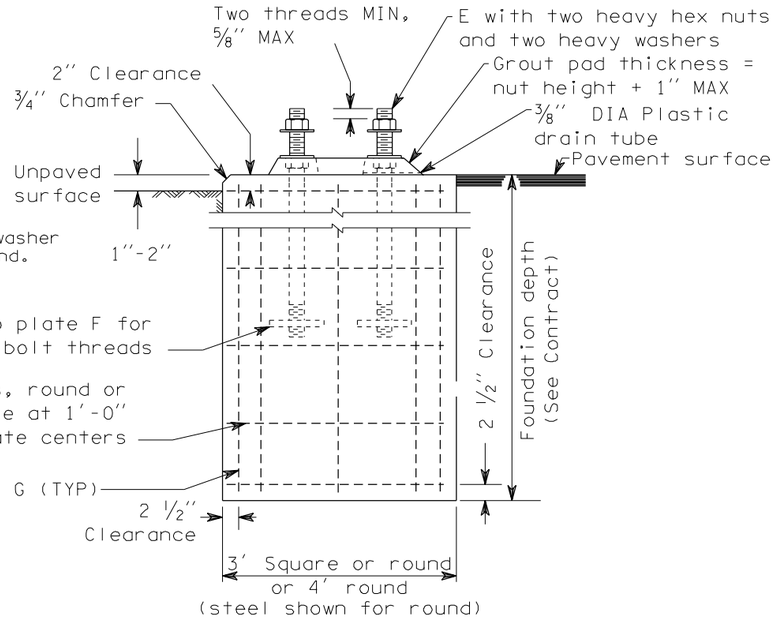

FOUNDATION DETAIL

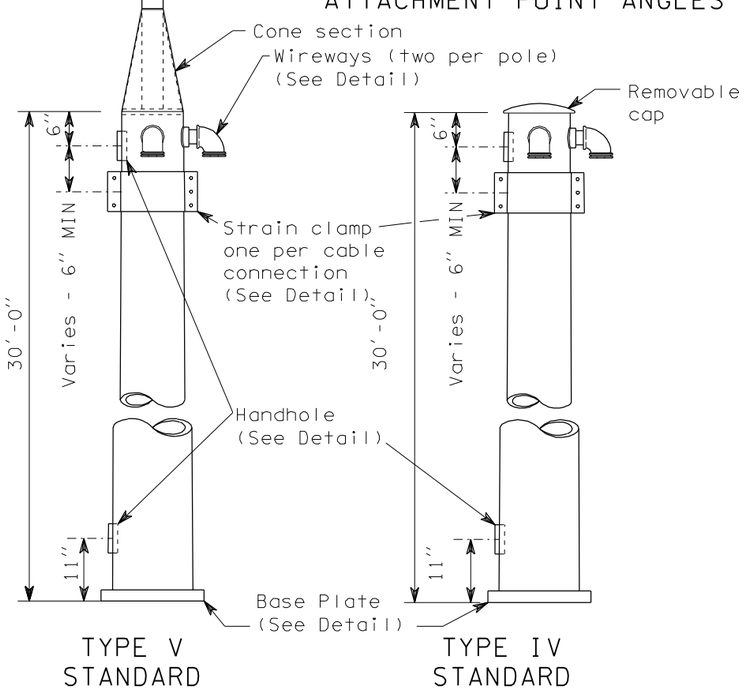

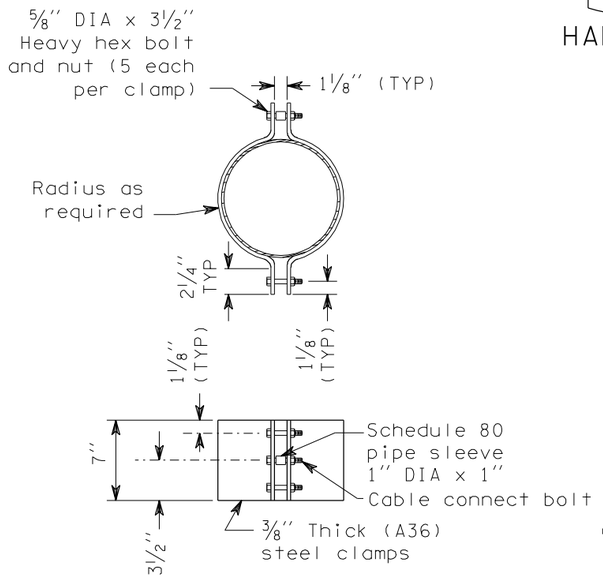

STRAIN CLAMP DETAIL

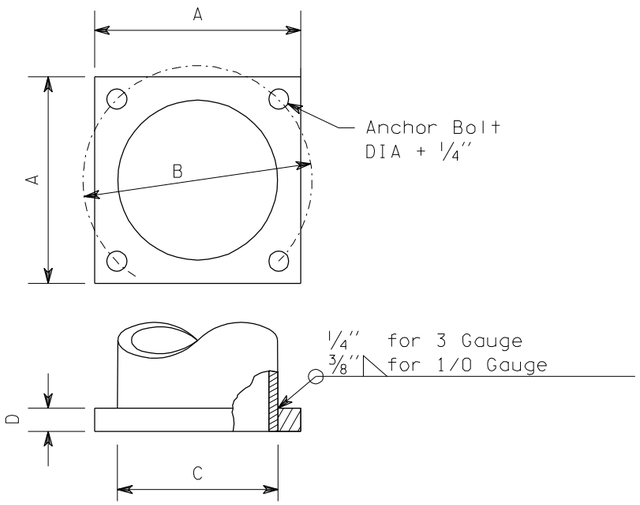

BASE PLATE DETAIL

M. MYINT LWIN
STATE OF WASHINGTON
10536
REGISTERED
PROFESSIONAL ENGINEER

EXPIRES JANUARY 17, 1999

NOTE: THIS PLAN IS NOT A LEGAL ENGINEERING DOCUMENT BUT AN ELECTRONIC DUPLICATE. THE ORIGINAL, SIGNED BY THE ENGINEER AND APPROVED FOR PUBLICATION, IS KEPT ON FILE AT THE WASHINGTON STATE DEPARTMENT OF TRANSPORTATION. A COPY MAY BE OBTAINED UPON REQUEST.

STRAIN POLE STANDARDS TYPE IV AND V

STANDARD PLAN J-7c

APPROVED FOR PUBLICATION

Clifford E. Mansfield — STATE DESIGN ENGINEER — *06-19-98* DATE

WASHINGTON STATE DEPARTMENT OF TRANSPORTATION
OLYMPIA, WASHINGTON

EFFECTIVE: APRIL 2, 2007 TO JANUARY 6, 2008

EFFECTIVE: APRIL 2, 2007 TO JANUARY 6, 2008

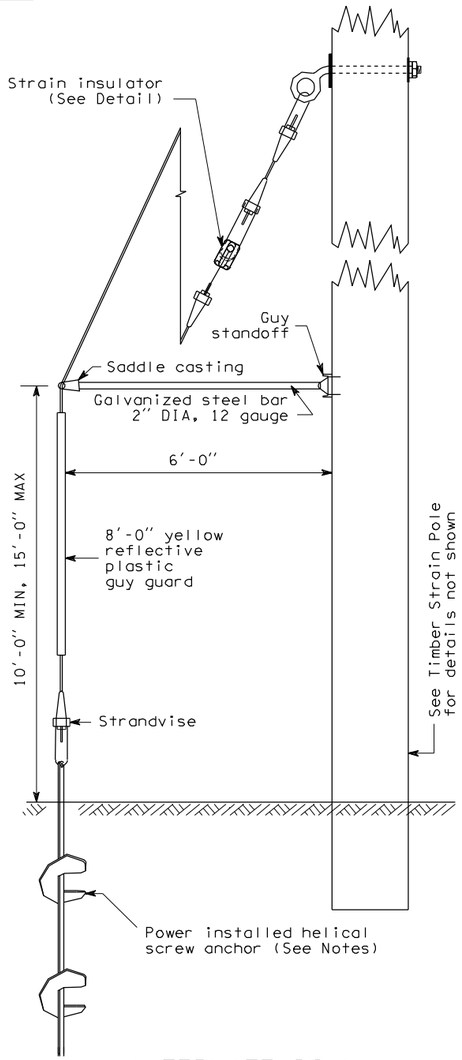

ALTERNATE DOWN GUY DETAIL

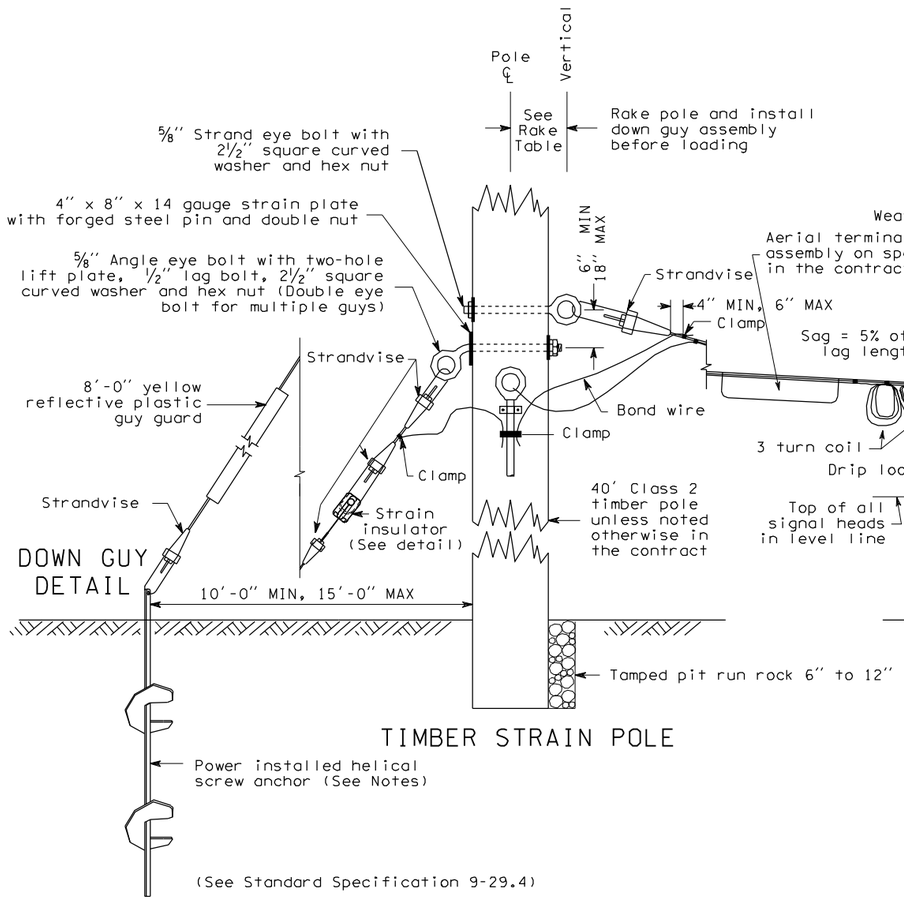

TIMBER STRAIN POLE

ANCHOR ASSEMBLY

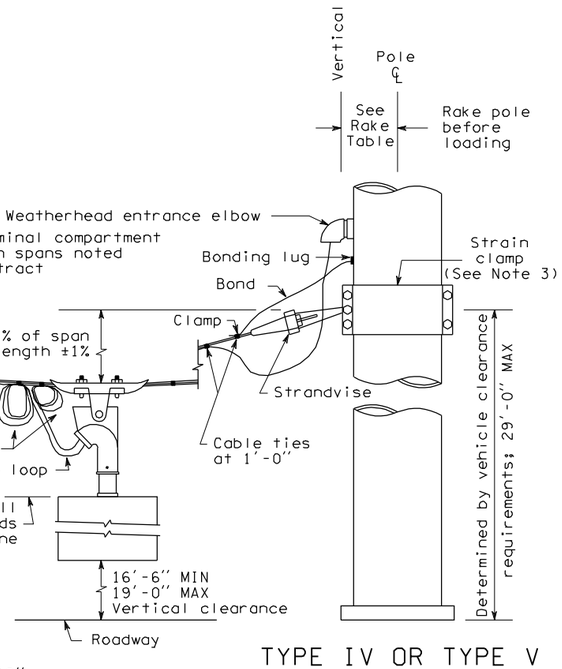

TYPE IV OR TYPE V
STRAIN POLE STANDARD

NOTES

1. An eight-way expanding anchor may be used as an acceptable alternate to power installed helical screw anchor.
2. If anchor hole diameter is greater than nominal diameter of folded anchors, a 5' cover of 6" to 12" size rock shall be tamped in to replace the disturbed soil immediately above the anchor.
3. See "Strain Clamp Detail" on Standard Plan "Strain Pole Standards: Type IV and Type V".

RAKE TABLE	
POLE CLASS	RAKE
1900#	7"
2700#	6"
3700#	5"
4800#	5"
5400#	4"
4300#	4"
7200#	4"
TIMBER	6"

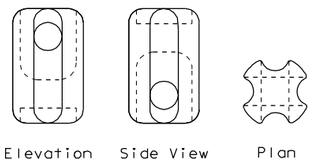

STRAIN INSULATOR DETAIL



EXPIRES JUNE 4, 1999

NOTE: THIS PLAN IS NOT A LEGAL ENGINEERING DOCUMENT BUT AN ELECTRONIC DUPLICATE. THE ORIGINAL, SIGNED BY THE ENGINEER AND DATED, IS THE LEGAL DOCUMENT. IT IS KEPT ON FILE AT THE WASHINGTON STATE DEPARTMENT OF TRANSPORTATION. A COPY MAY BE OBTAINED UPON REQUEST.

SPAN WIRE INSTALLATION

STANDARD PLAN J-7d

DATE	REVISION	BY	APPR'D
	Delete bury depth of pole.	ABN	-

APPROVED FOR PUBLICATION

Clifford E. Mansfield *04-24-98*

DEPUTY STATE DESIGN ENGINEER — DATE

WASHINGTON STATE DEPARTMENT OF TRANSPORTATION
OLYMPIA, WASHINGTON

EFFECTIVE: APRIL 2, 2007 TO JANUARY 6, 2008

EFFECTIVE: APRIL 2, 2007 TO JANUARY 6, 2008

DRAWN BY: MONIQUE GLICK

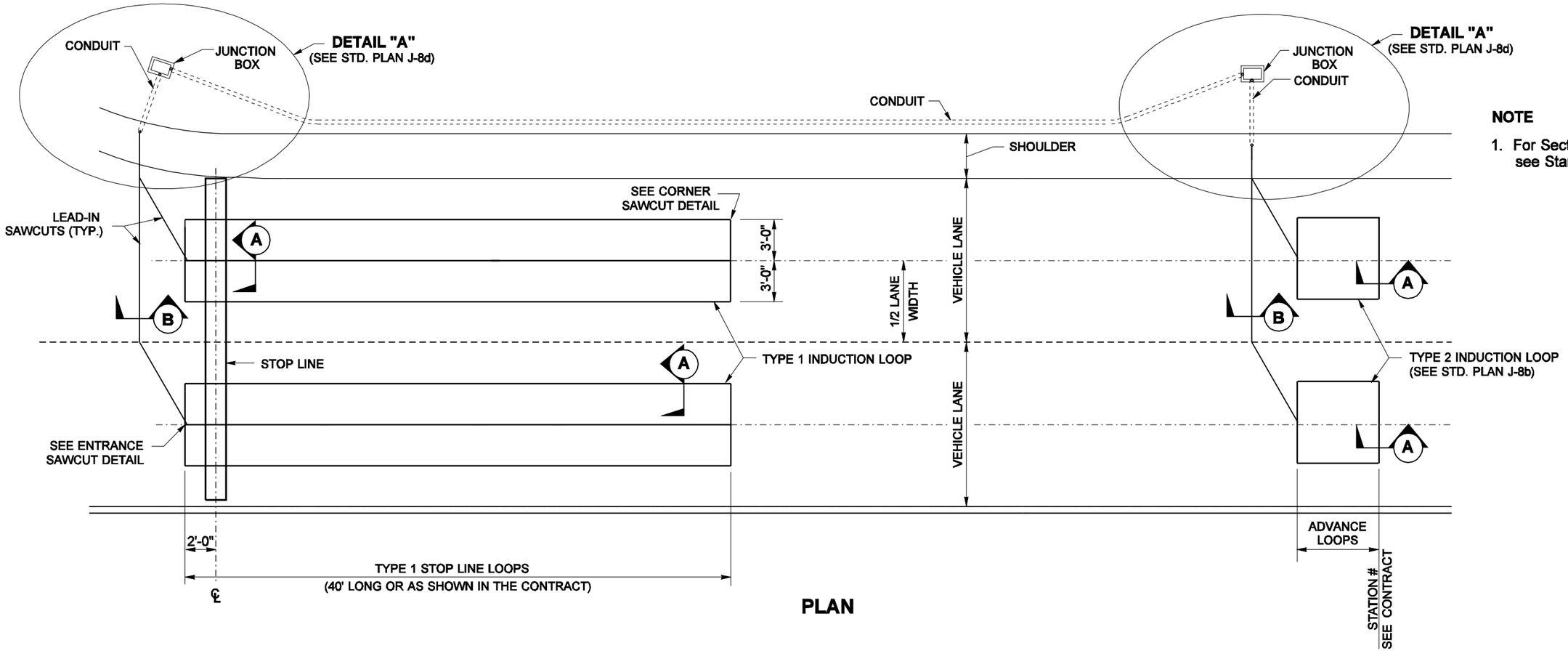

PLAN

NOTE

1. For Sections A and B, see Standard Plan J-8d.

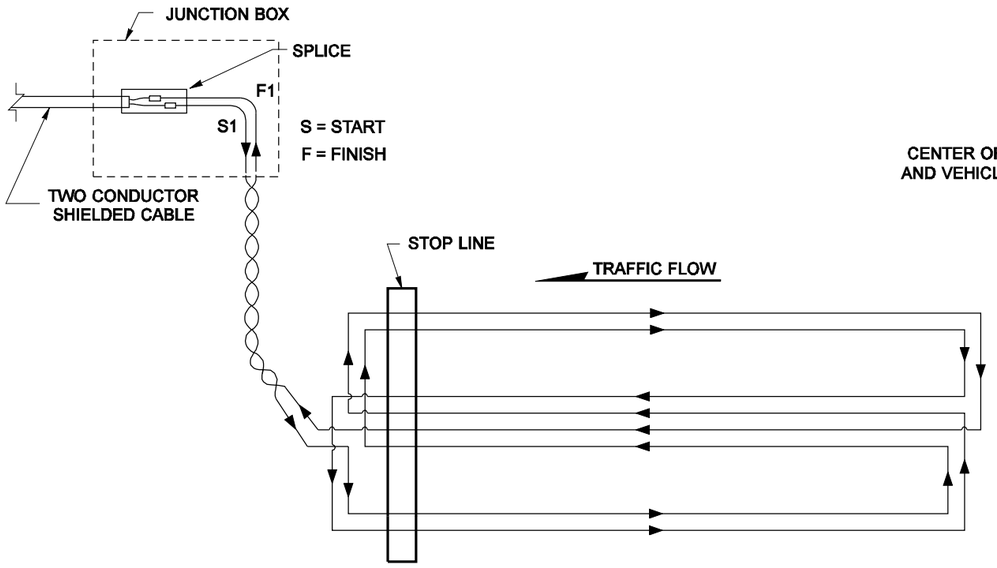

TYPE 1 STOP LINE LOOP WIRING DIAGRAM

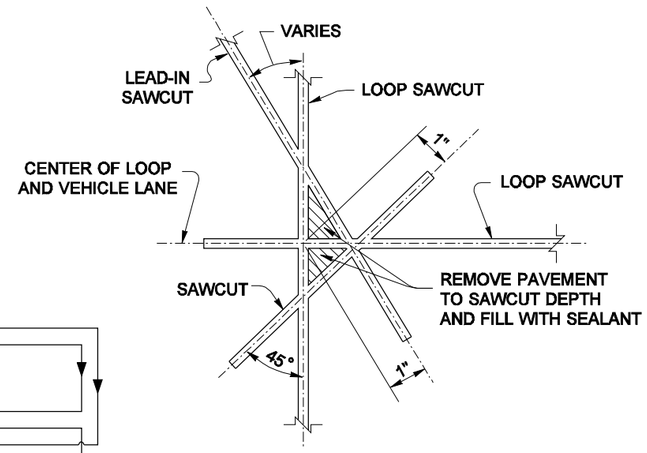

ENTRANCE SAWCUT DETAIL

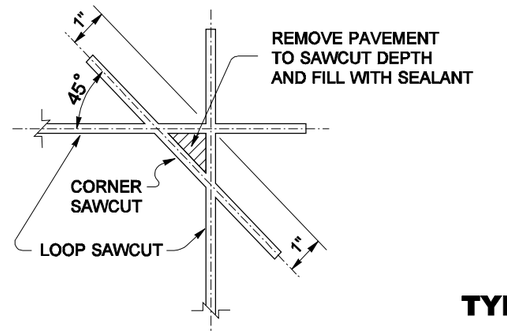

CORNER SAWCUT DETAIL

R. SCOTT ZELLER
STATE OF WASHINGTON
28680
REGISTERED
PROFESSIONAL ENGINEER

EXPIRES MAY 5, 2005

NOTE: THIS PLAN IS NOT A LEGAL ENGINEERING DOCUMENT BUT AN ELECTRONIC DUPLICATE. THE ORIGINAL, SIGNED BY THE ENGINEER AND APPROVED FOR PUBLICATION, IS KEPT ON FILE AT THE WASHINGTON STATE DEPARTMENT OF TRANSPORTATION. A COPY MAY BE OBTAINED UPON REQUEST.

TYPE 1 INDUCTION LOOP

STANDARD PLAN J-8a

SHEET 1 OF 1 SHEET

APPROVED FOR PUBLICATION

Harold J. Peterfeso — STATE DESIGN ENGINEER

05-20-04 — DATE

Washington State Department of Transportation

EFFECTIVE: APRIL 2, 2007 TO JANUARY 6, 2008

EFFECTIVE: APRIL 2, 2007 TO JANUARY 6, 2008
EFFECTIVE: APRIL 2, 2007 TO JANUARY 6, 2008

DRAWN BY: MONIQUE GLICK

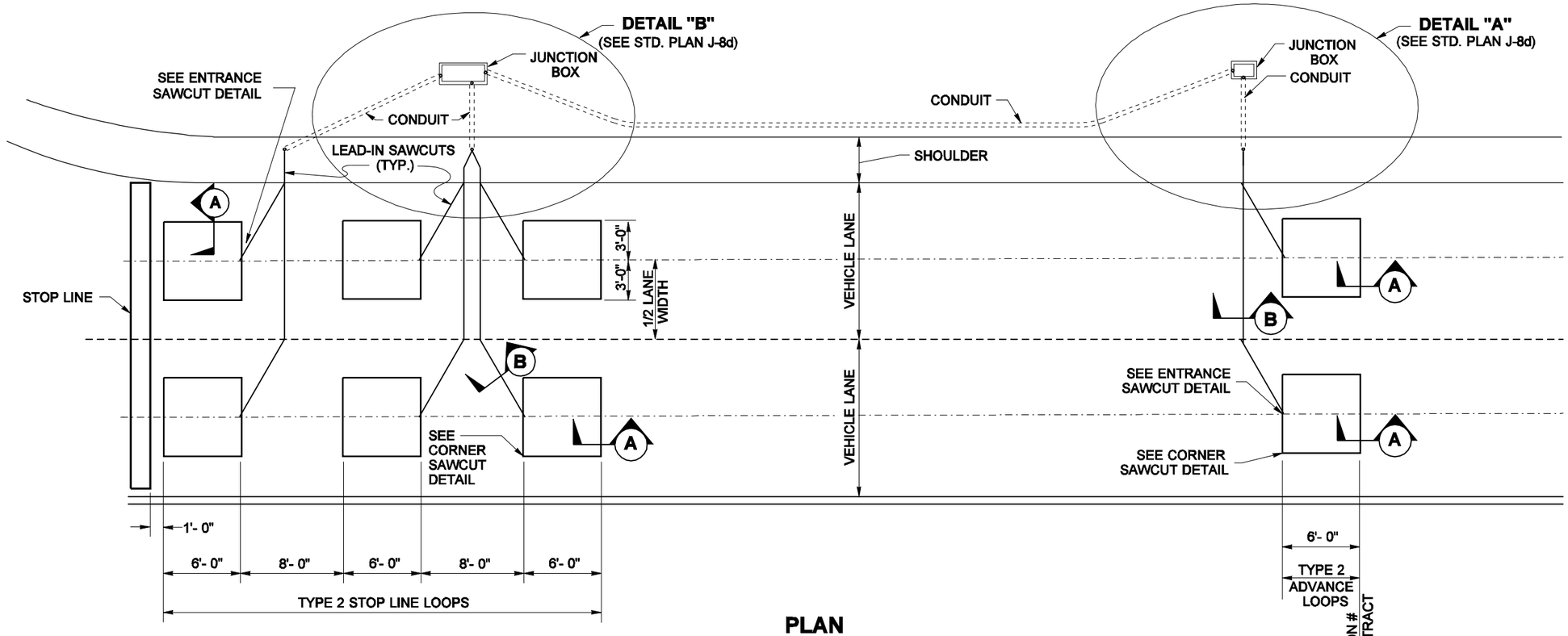

PLAN

STATION #
SEE CONTRACT

NOTE

1. For Sections A and B, see Standard Plan J-8d.

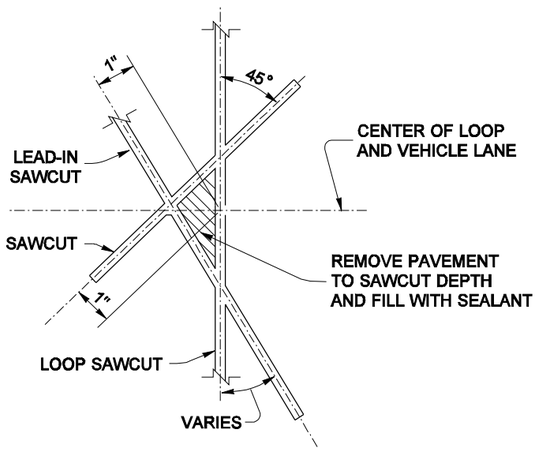

ENTRANCE SAWCUT DETAIL

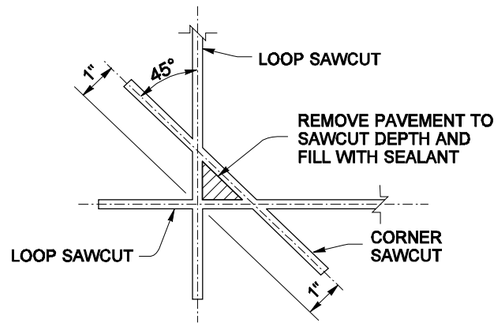

CORNER SAWCUT DETAIL



EXPIRES MAY 5, 2005

NOTE: THIS PLAN IS NOT A LEGAL ENGINEERING DOCUMENT BUT AN ELECTRONIC DUPLICATE. THE ORIGINAL, SIGNED BY THE ENGINEER, AND APPROVED FOR PUBLICATION, IS KEPT ON FILE AT THE WASHINGTON STATE DEPARTMENT OF TRANSPORTATION. A COPY MAY BE OBTAINED UPON REQUEST.

TYPE 2 INDUCTION LOOP

STANDARD PLAN J-8b

SHEET 1 OF 2 SHEETS

APPROVED FOR PUBLICATION

Harold J. Peterfeso — *05-20-04*

STATE DESIGN ENGINEER — DATE

Washington State Department of Transportation

EFFECTIVE: APRIL 2, 2007 TO JANUARY 6, 2008
EFFECTIVE: APRIL 2, 2007 TO JANUARY 6, 2008

EFFECTIVE: APRIL 2, 2007 TO JANUARY 6, 2008

DRAWN BY: MONIQUE GLICK

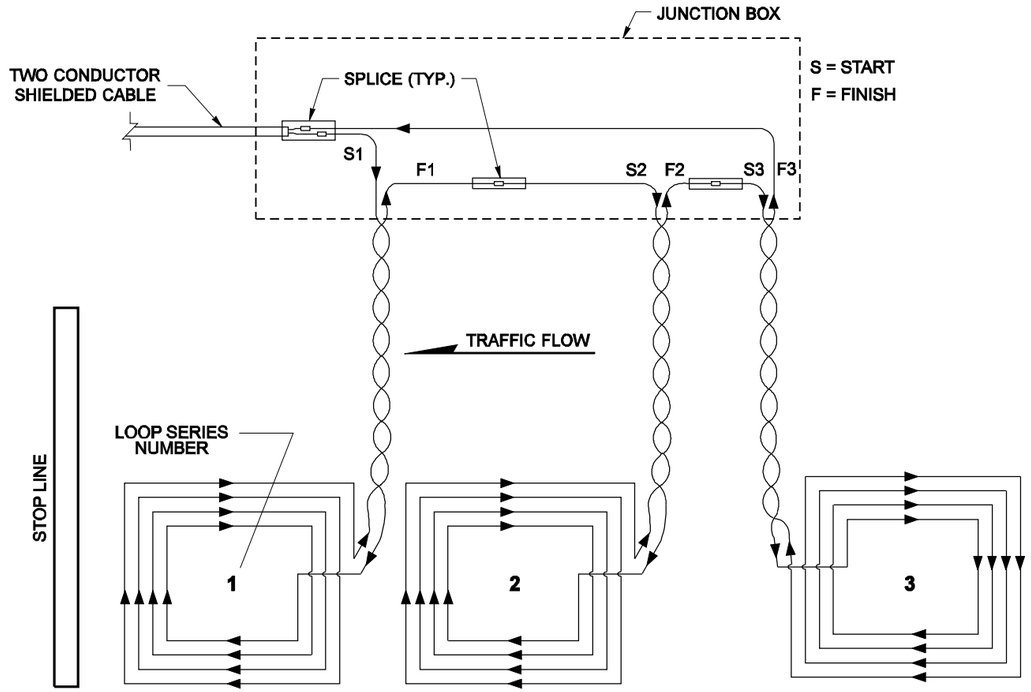

TYPE 2 STOP LINE LOOP WIRING DIAGRAM
(SERIES SPLICE SHOWN)

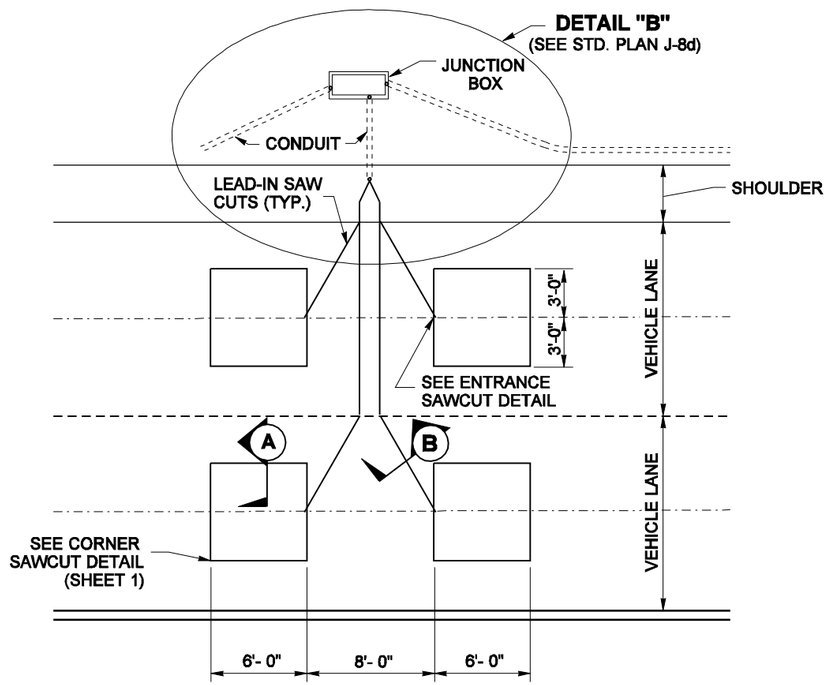

TYPE 2 SAMPLING LOOPS

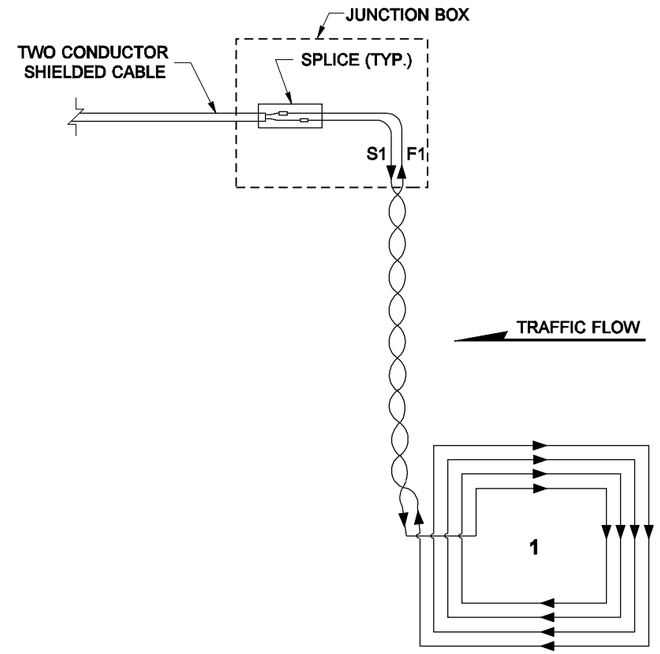

TYPE 2 ADVANCE LOOP WIRING DIAGRAM

NOTES

1. All of the loop lead-in wires shall return to the Junction Box.
2. For Splice Detail, see Standard Plan J-8d.

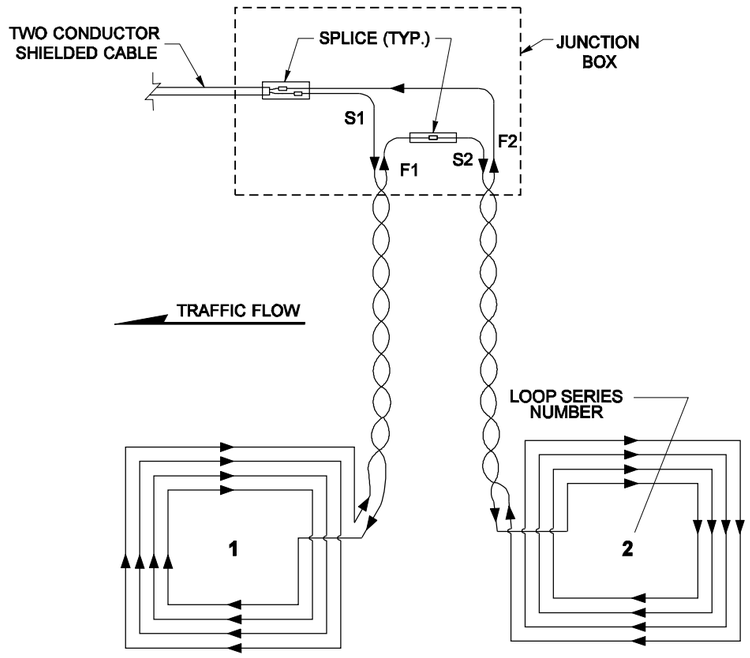

TYPE 2 SAMPLING LOOP WIRING DIAGRAM
(SERIES SPLICE SHOWN)

R. SCOTT ZELLER
STATE OF WASHINGTON
28680
REGISTERED
PROFESSIONAL ENGINEER

EXPIRES MAY 5, 2005

NOTE: THIS PLAN IS NOT A LEGAL ENGINEERING DOCUMENT BUT AN ELECTRONIC DUPLICATE. THE ORIGINAL, SIGNED BY THE ENGINEER AND APPROVED FOR PUBLICATION, IS KEPT ON FILE AT THE WASHINGTON STATE DEPARTMENT OF TRANSPORTATION. A COPY MAY BE OBTAINED UPON REQUEST.

TYPE 2 INDUCTION LOOP

STANDARD PLAN J-8b

SHEET 2 OF 2 SHEETS

APPROVED FOR PUBLICATION

Harold J. Peterfeso — STATE DESIGN ENGINEER — *05-20-04* — DATE

Washington State Department of Transportation

EFFECTIVE: APRIL 2, 2007 TO JANUARY 6, 2008

EFFECTIVE: APRIL 2, 2007 TO JANUARY 6, 2008

DRAWN BY: MONIQUE GLICK

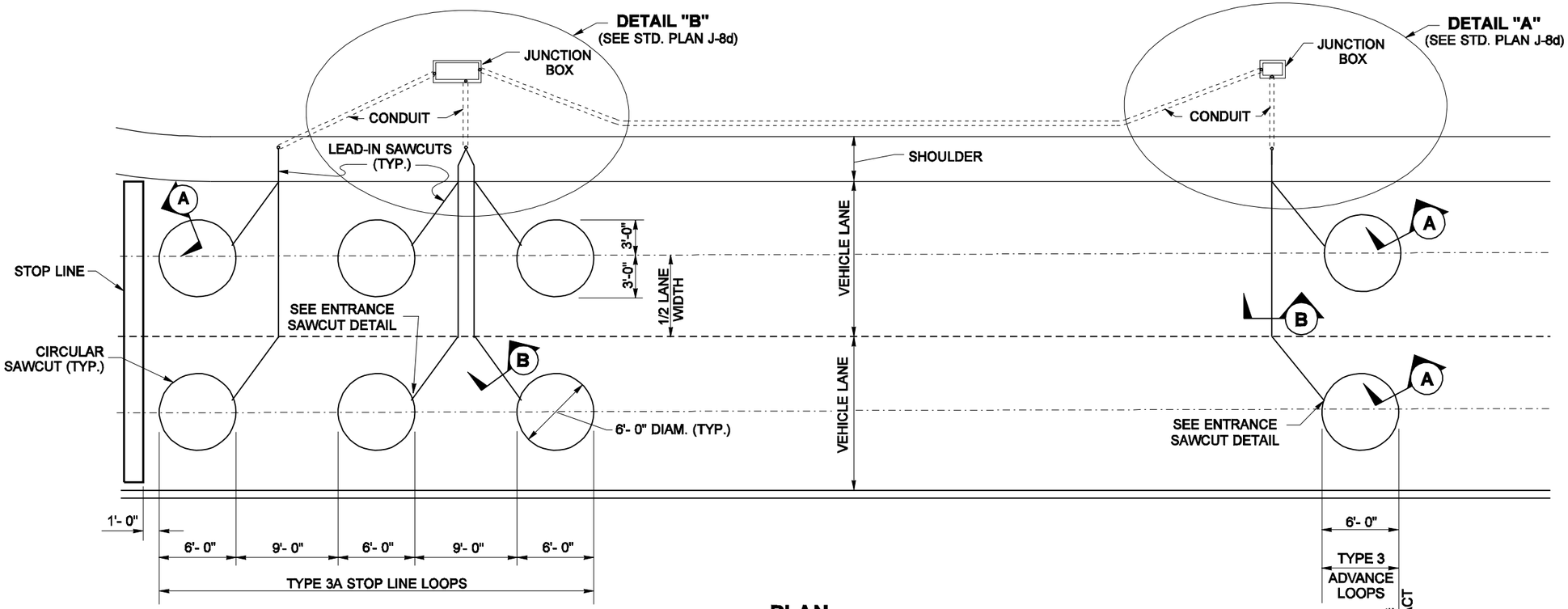

PLAN

NOTE

1. For Sections A and B, see Standard Plan J-8d.

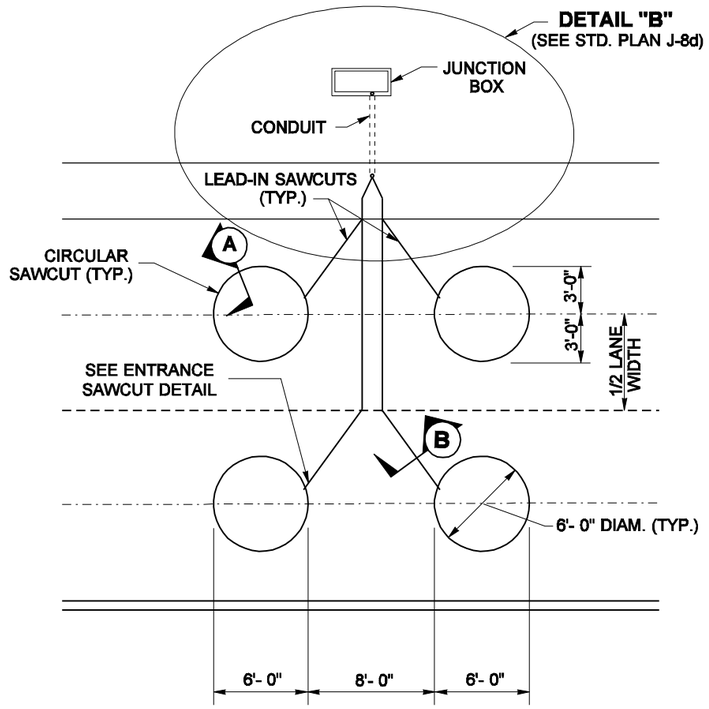

TYPE 3 SAMPLING LOOPS

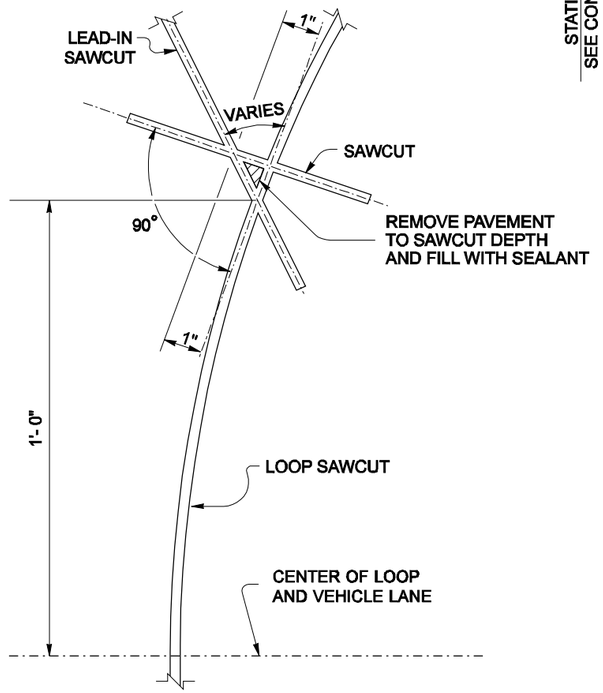

ENTRANCE SAWCUT DETAIL

STATION # SEE CONTRACT

R. SCOTT ZELLER
STATE OF WASHINGTON
28680
REGISTERED
PROFESSIONAL ENGINEER
EXPIRES MAY 5, 2005

NOTE: THIS PLAN IS NOT A LEGAL ENGINEERING DOCUMENT BUT AN ELECTRONIC DUPLICATE. THE ORIGINAL, SIGNED BY THE ENGINEER AND APPROVED FOR PUBLICATION, IS KEPT ON FILE AT THE WASHINGTON STATE DEPARTMENT OF TRANSPORTATION. A COPY MAY BE OBTAINED UPON REQUEST.

TYPE 3 INDUCTION LOOP

STANDARD PLAN J-8c

SHEET 1 OF 3 SHEETS

APPROVED FOR PUBLICATION

Harold J. Peterfeso — STATE DESIGN ENGINEER

05-20-04 — DATE

Washington State Department of Transportation

EFFECTIVE: APRIL 2, 2007 TO JANUARY 6, 2008

EFFECTIVE: APRIL 2, 2007 TO JANUARY 6, 2008

DRAWN BY: MONIQUE GLICK

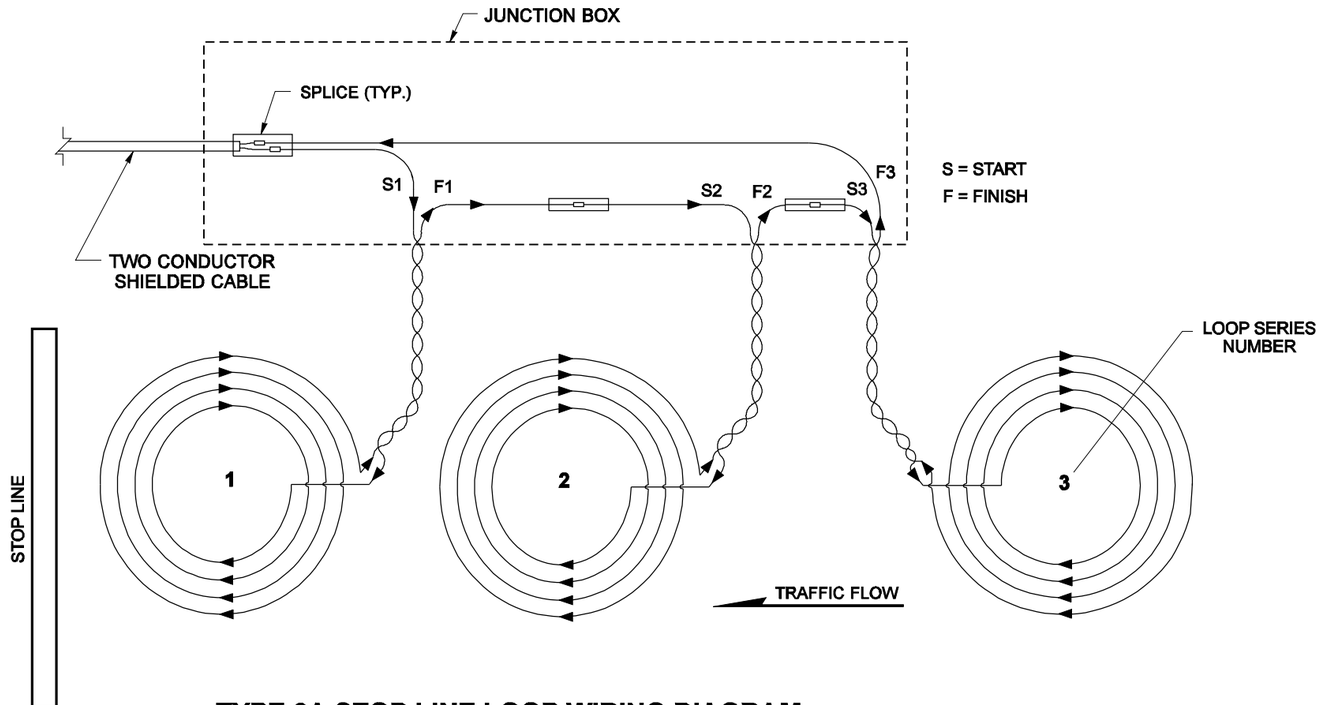

TYPE 3A STOP LINE LOOP WIRING DIAGRAM
(SERIES SPLICE SHOWN)

NOTES

1. All of the loop lead-in wires shall return to the Junction Box.
2. For Splice Detail, see Standard Plan J-8d.

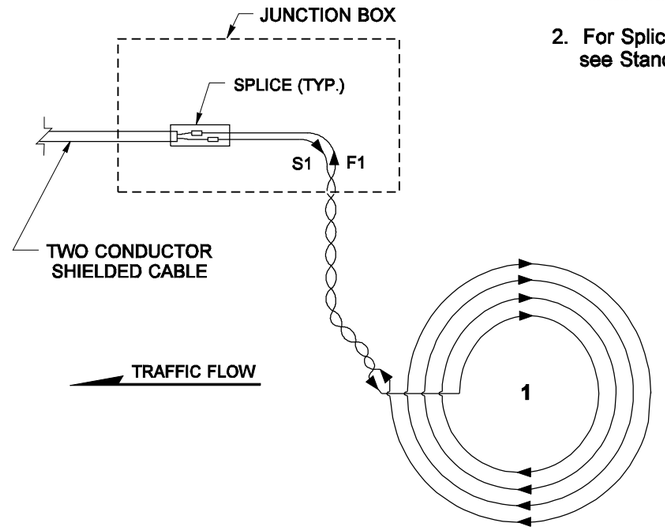

TYPE 3 ADVANCE
LOOP WIRING DIAGRAM

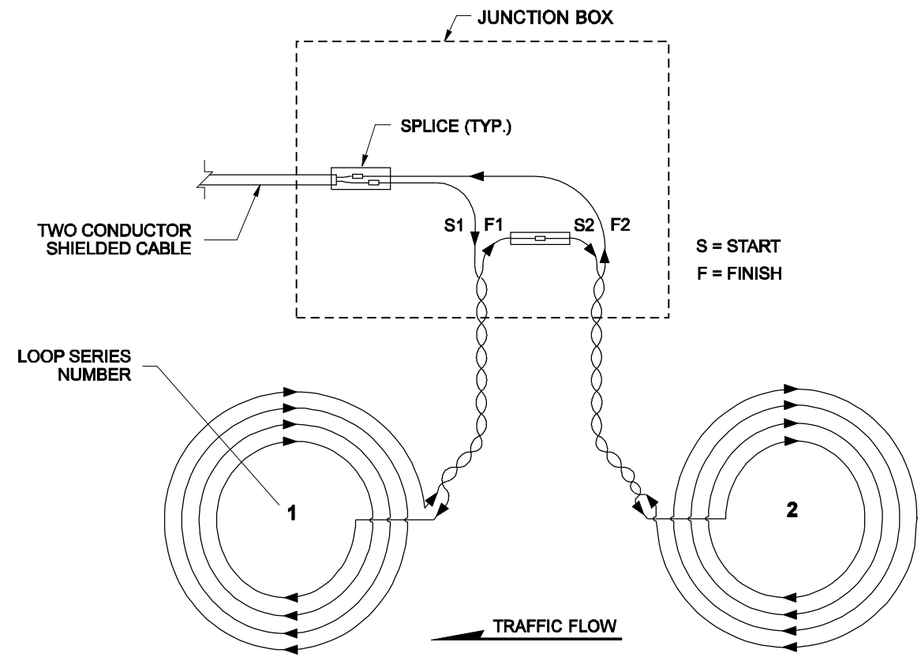

TYPE 3 SAMPLING LOOP WIRING DIAGRAM
(SERIES SPLICE SHOWN)

R. SCOTT ZELLER
STATE OF WASHINGTON
28680
REGISTERED
PROFESSIONAL ENGINEER
EXPIRES MAY 5, 2005

NOTE: THIS PLAN IS NOT A LEGAL ENGINEERING DOCUMENT BUT AN ELECTRONIC DUPLICATE. THE ORIGINAL, SIGNED BY THE ENGINEER AND APPROVED FOR PUBLICATION, IS KEPT ON FILE AT THE WASHINGTON STATE DEPARTMENT OF TRANSPORTATION. A COPY MAY BE OBTAINED UPON REQUEST.

TYPE 3 INDUCTION LOOP

STANDARD PLAN J-8c

SHEET 2 OF 3 SHEETS

APPROVED FOR PUBLICATION

Harold J. Peterfeso — STATE DESIGN ENGINEER — *05-20-04* — DATE

Washington State Department of Transportation

EFFECTIVE: APRIL 2, 2007 TO JANUARY 6, 2008

EFFECTIVE: APRIL 2, 2007 TO JANUARY 6, 2008
EFFECTIVE: APRIL 2, 2007 TO JANUARY 6, 2008

DRAWN BY: MONIQUE GLICK

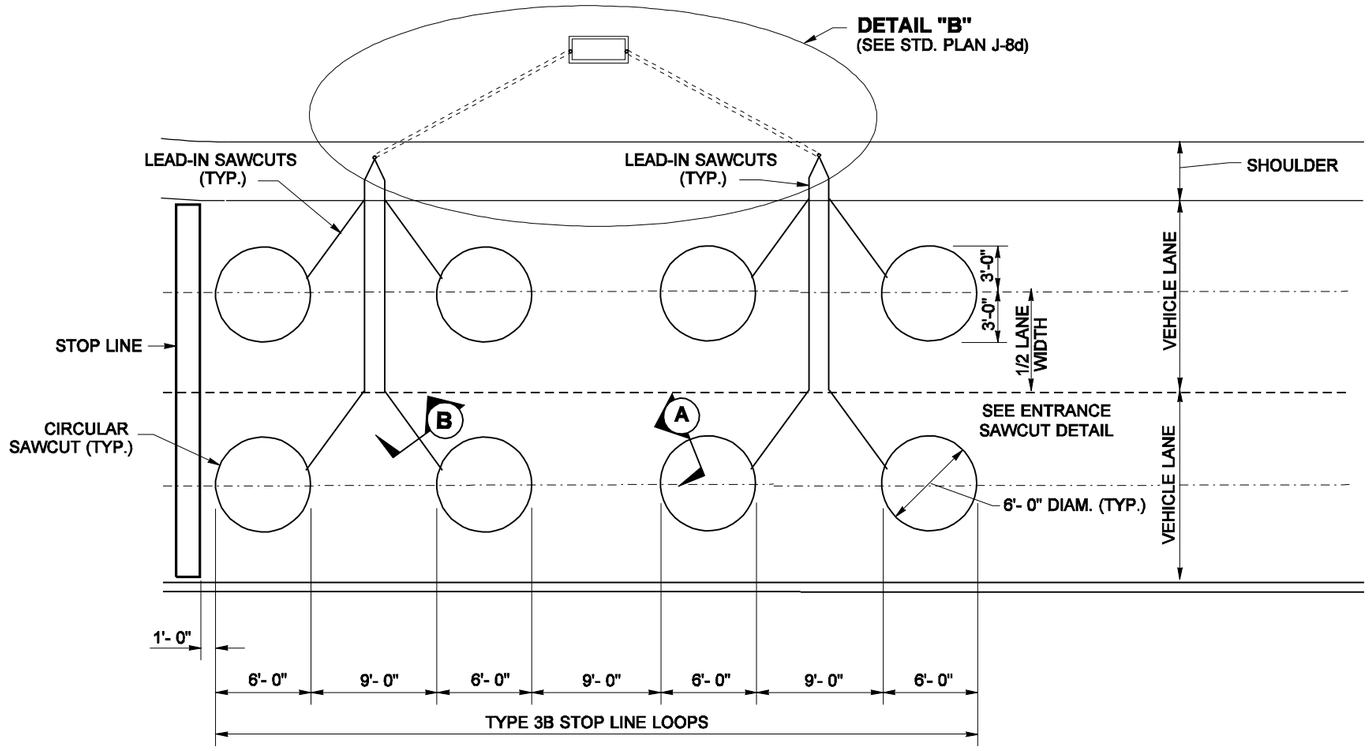

PLAN

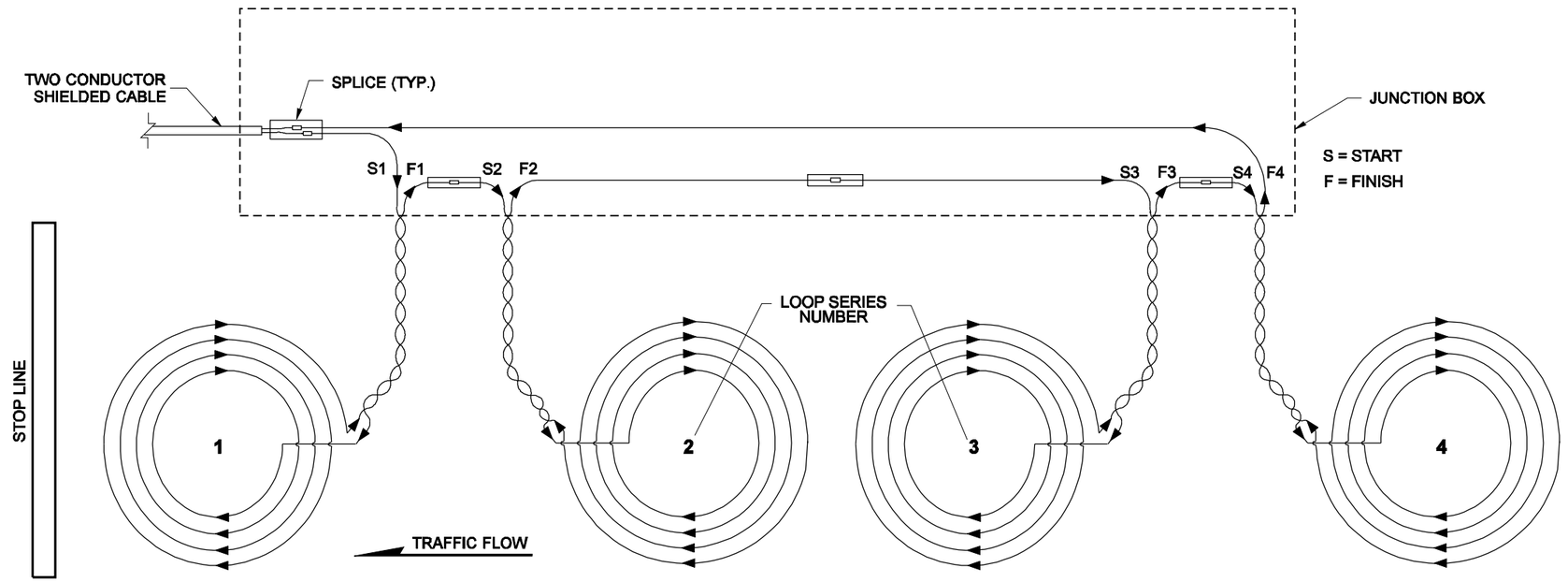

TYPE 3B STOP LINE LOOP WIRING DIAGRAM

(SERIES SPLICE SHOWN)



NOTE: THIS PLAN IS NOT A LEGAL ENGINEERING DOCUMENT BUT AN ELECTRONIC DUPLICATE. THE ORIGINAL, SIGNED BY THE ENGINEER AND APPROVED FOR PUBLICATION, IS KEPT ON FILE AT THE WASHINGTON STATE DEPARTMENT OF TRANSPORTATION. A COPY MAY BE OBTAINED UPON REQUEST.

TYPE 3 INDUCTION LOOP

STANDARD PLAN J-8c

SHEET 3 OF 3 SHEETS

APPROVED FOR PUBLICATION

Harold J. Peterfeso — STATE DESIGN ENGINEER

05-20-04 — DATE

Washington State Department of Transportation

EFFECTIVE: APRIL 2, 2007 TO JANUARY 6, 2008
EFFECTIVE: APRIL 2, 2007 TO JANUARY 6, 2008

EFFECTIVE: APRIL 2, 2007 TO JANUARY 6, 2008

DRAWN BY: MONIQUE GLICK

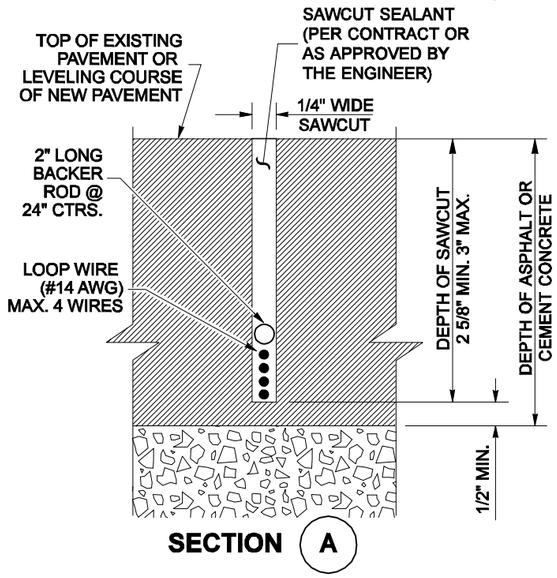

SECTION (A)

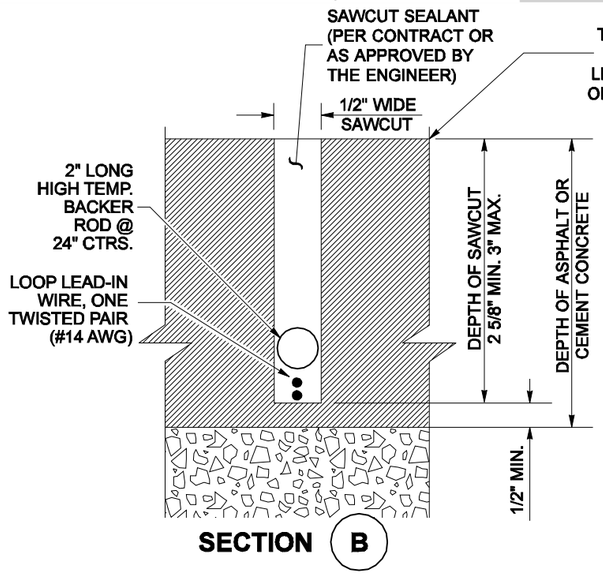

SECTION (B)

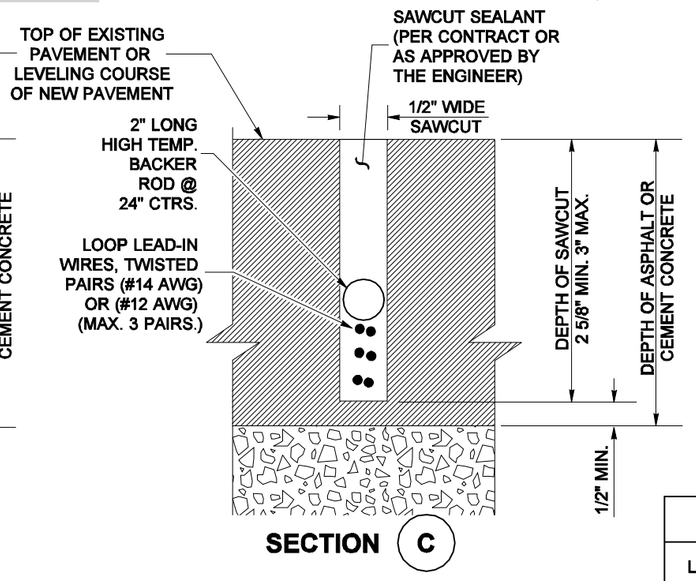

SECTION (C)

NOTES

1. Fill the conduit trench to the top of the existing or new surfacing with CSTC, sand or controlled density fill. See "Standard Specifications" Section 2-09.3(1)E.
2. Minor Regional variation is allowed in the soft pocket closure. Consult with the Engineer or see the Contract for additional requirements.
3. Conductors shall be snug to the bottom of the sawcut. High temperature backer rod shall be snug to the conductors.

CONDUIT SIZING TABLE

LOOP LEAD PAIRS	1-2	3	4-5	6-8	9-12
CONDUIT SIZE (MIN)	1"	1 1/4"	1 1/2"	2"	3"

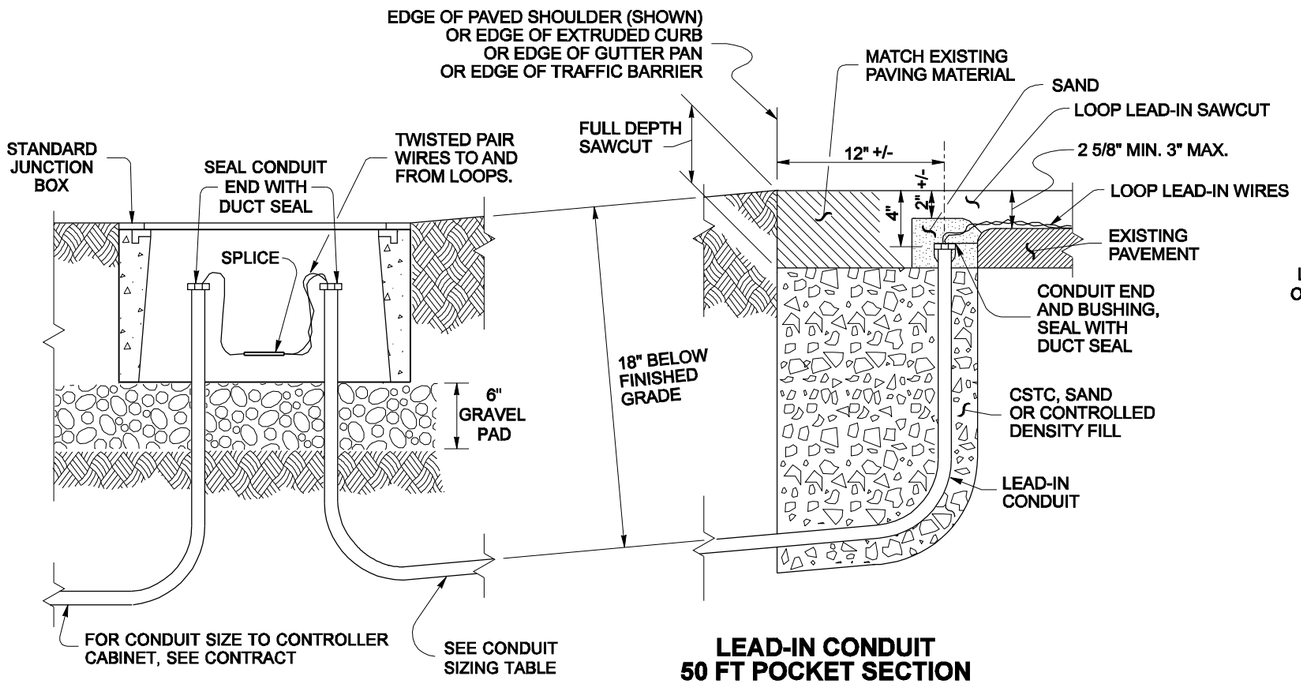

JUNCTION BOX PLACEMENT

LEAD-IN CONDUIT 50 FT POCKET SECTION

SECTION (E)

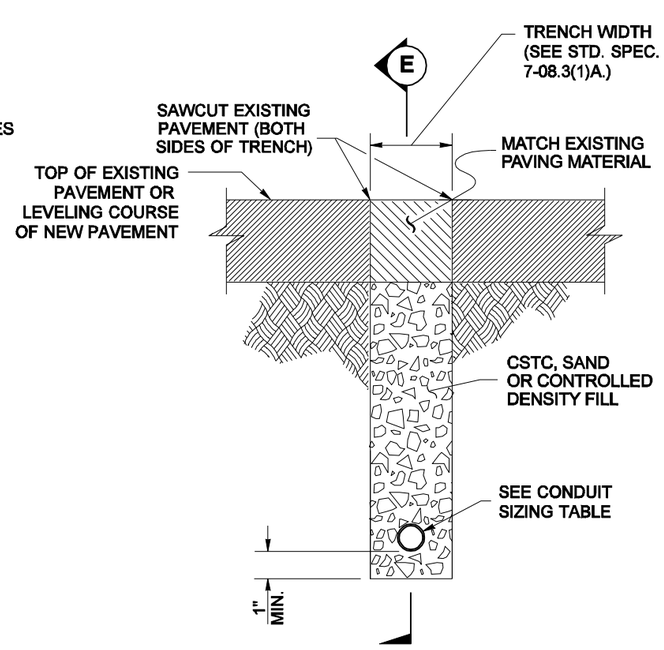

SECTION (D)

R. SCOTT ZELLER
STATE OF WASHINGTON
28680
REGISTERED
PROFESSIONAL ENGINEER

EXPIRES MAY 5, 2005

NOTE: THIS PLAN IS NOT A LEGAL ENGINEERING DOCUMENT BUT AN ELECTRONIC DUPLICATE. THE ORIGINAL, SIGNED BY THE ENGINEER AND APPROVED FOR PUBLICATION, IS KEPT ON FILE AT THE WASHINGTON STATE DEPARTMENT OF TRANSPORTATION. A COPY MAY BE OBTAINED UPON REQUEST.

INDUCTION LOOP DETAILS

STANDARD PLAN J-8d

SHEET 1 OF 2 SHEETS

APPROVED FOR PUBLICATION

Harold J. Peterfeso — STATE DESIGN ENGINEER

05-20-04 — DATE

Washington State Department of Transportation

EFFECTIVE: APRIL 2, 2007 TO JANUARY 6, 2008

EFFECTIVE: APRIL 2, 2007 TO JANUARY 6, 2008

DRAWN BY: MONIQUE GLICK

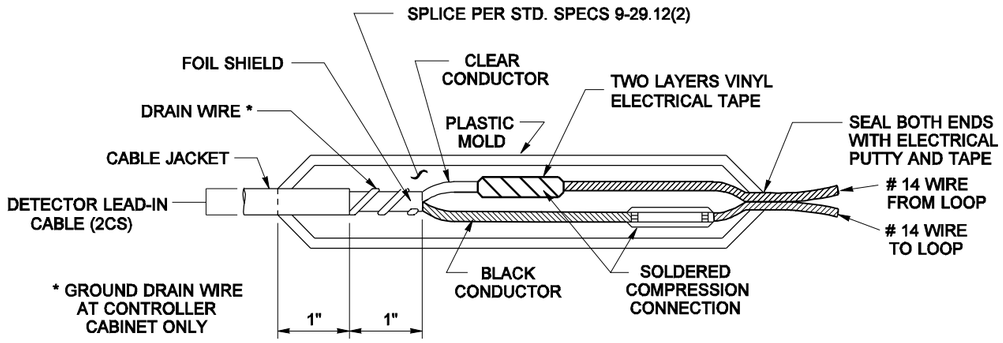

SPLICE DETAIL

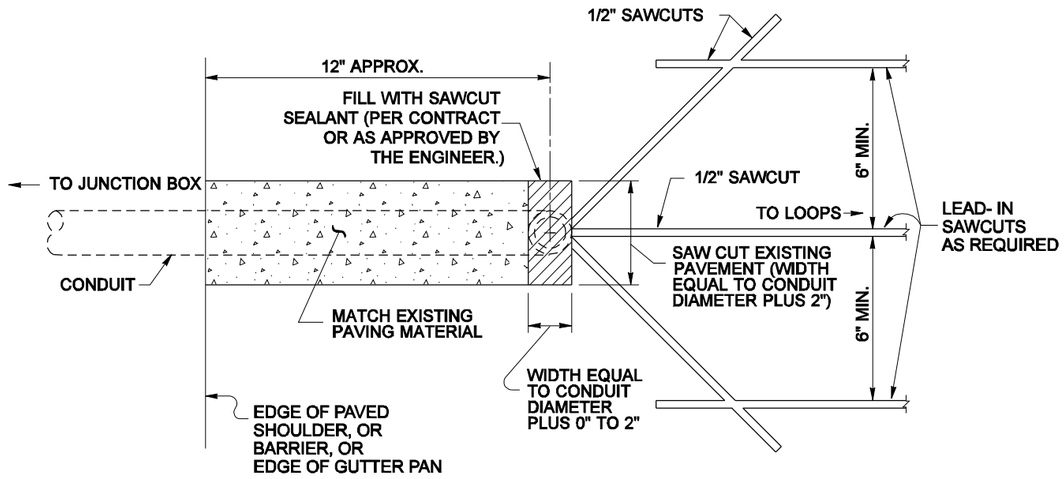

SAWCUT AND CONDUIT CONNECTION PLAN

LOOP LEAD-IN WIRING LABEL

L x x x - x x

- LOOP NUMBER
- DASH
- "S" OR "F"
- LOOP SERIES NUMBER

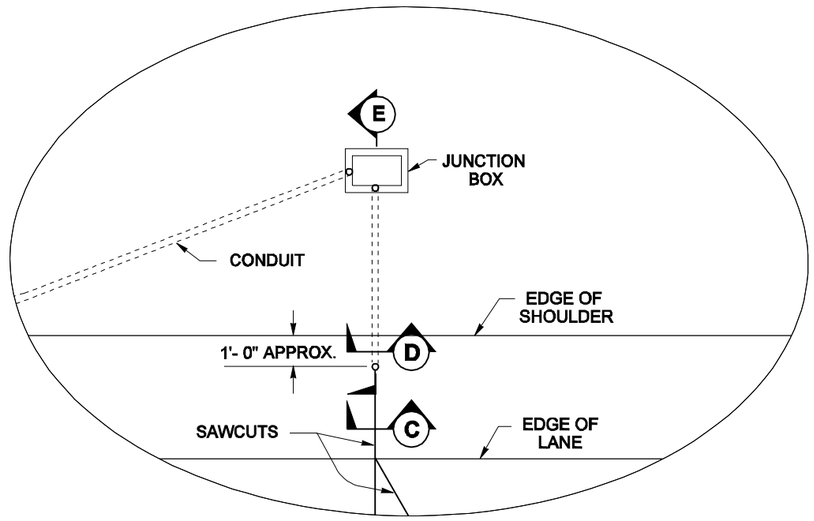

DETAIL "A"

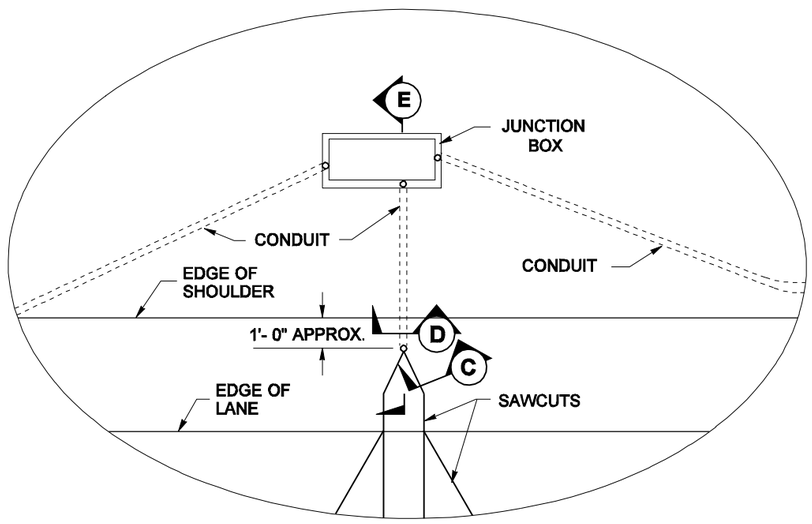

DETAIL "B"

LOOP INSTALLATION NOTES

1. Install the Junction Box and the lead-in conduit.
2. Sawcut the loop slots and the lead-in slots.
3. Lay out the loop wire starting at the Junction Box, allowing 5' minimum slack.
4. Install the wire in the loop slot as shown.
5. Finish laying out the wire at the Junction Box and identify the leads with the loop number, the "S" for start and the "F" for the finish, and the loop series number.
6. Twist each pair of the lead wires two times per foot from the loop to the Junction Box. Reverse the direction of the twist for each successive pair installed.
7. Construct a supplemental splice containing any series loop connections required in the plans. Supplemental splices are subject to the same requirements shown for the loop lead and the shielded cable splice.
8. Splice the loop leads of supplemental splice leads to the shielded cable as noted in the Contract.
9. Complete installation and test loop circuits or combination loop circuits. See Standard Specifications 8-20.3(14)D.
10. Conduit for the loop stubout shall be as required in the Contract.



EXPIRES MAY 5, 2005

NOTE: THIS PLAN IS NOT A LEGAL ENGINEERING DOCUMENT BUT AN ELECTRONIC DUPLICATE. THE ORIGINAL, SIGNED BY THE ENGINEER AND APPROVED FOR PUBLICATION, IS KEPT ON FILE AT THE WASHINGTON STATE DEPARTMENT OF TRANSPORTATION. A COPY MAY BE OBTAINED UPON REQUEST.

INDUCTION LOOP DETAILS

STANDARD PLAN J-8d

SHEET 2 OF 2 SHEETS

APPROVED FOR PUBLICATION

Harold J. Peterfeso — STATE DESIGN ENGINEER

05-20-04 — DATE

Washington State Department of Transportation

EFFECTIVE: APRIL 2, 2007 TO JANUARY 6, 2008

COMBINATION GALVANIZED STEEL CONDUIT (GSC)
AND NON-METALLIC CONDUIT (NMC) APPLICATION

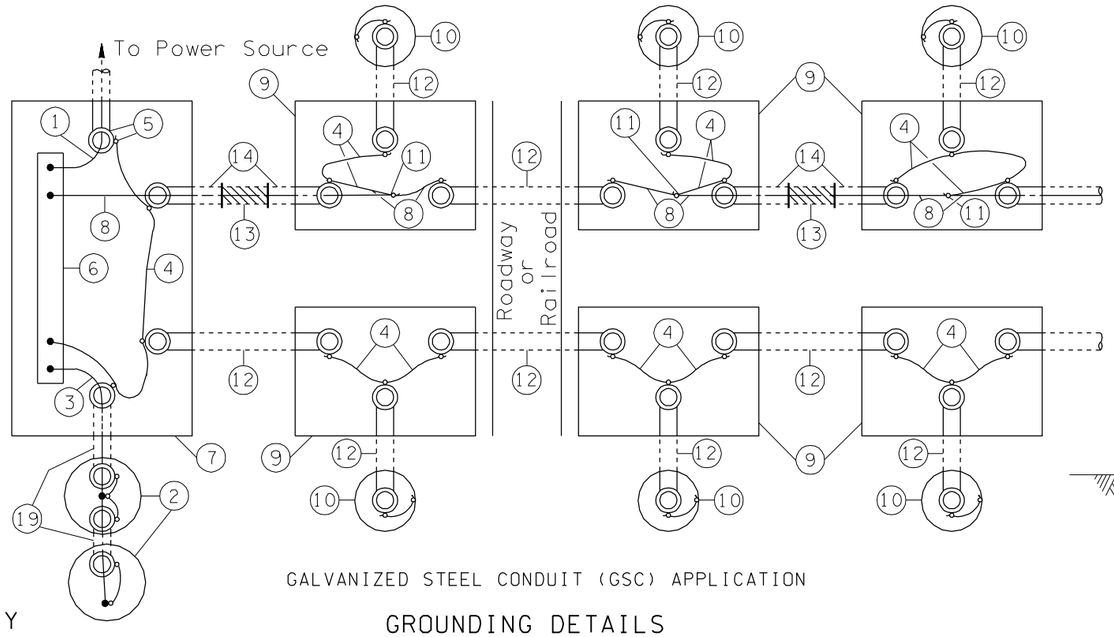

GALVANIZED STEEL CONDUIT (GSC) APPLICATION

GROUNDING DETAILS

KEY

1. Service Neutral
2. Service Ground
3. Grounding Electrode Conductor
4. Bonding Jumper
5. Grounding Bushing (typ. all conduit terminations)
6. Service Neutral Bus (Copper)
7. Service Enclosure
8. Equipment Grounding Conductor
9. Junction Box
10. Electrical Load Support (luminaire pole)
11. Copper Split Bolt Clamp
12. Galvanized Steel Conduit (GSC)
13. Non-metallic Conduit (NMC)
14. Option A - 10′ GSC with Field Bend
    - Approved Adapter Fitting
    - Grounding Bushing

    Option B - 10′ GSC
    - GS Factory Elbows
    - Approved Adapter Fitting
    - GS Coupling
    - Grounding Bushing
15. Ground Rod
16. Edge of Foundation, Pole or Service Support
17. Clamp
18. Junction Box or 8″ Drain Tile with Approved Cover
19. Code Sized GSC
20. To Service Neutral Bus
21. To Grounding Terminal or Connection to Equipment Grounding System

NOTES

1. If parallel circuits of different sizes are contained in one conduit, the size of the grounding conductor shall be determined on the basis of the largest conductor. Only one grounding conductor is required for each conduit regardless of the number of circuits contained.

2. Service ground per serving utility requirement. If the utility uses aluminum service conductors, an approved Al-Cu pressure type ground connector shall be used to secure the service neutral to the copper neutral bar in the service enclosure. Except for the above, all grounding conductors shall be copper.

3. Equipment grounding conductors and grounding electrode conductors shall be sized in accordance with the National Electric Code (No. 8 minimum) .

SUPPLEMENTAL GROUND

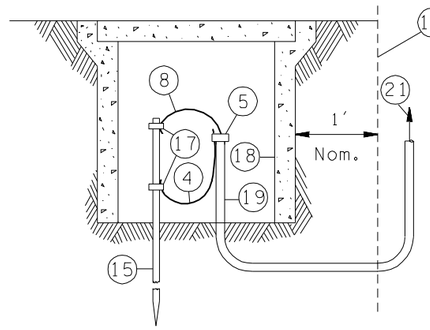

Required to supplement equipment grounding for luminaire standards with direct burial, aerial feeds, or where required in plans.

SERVICE GROUND

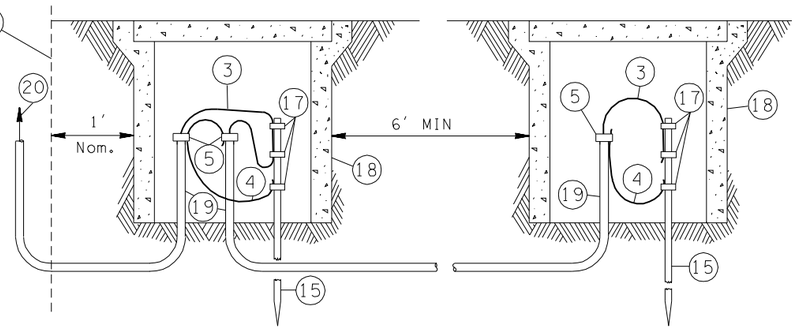

Required at all services and separately derived systems.

GROUND ROD DETAILS

DAVID K. PEACH
STATE OF WASHINGTON
0011089
REGISTERED
PROFESSIONAL ENGINEER

EXPIRES JUNE 4, 1999

NOTE: THIS PLAN IS NOT A LEGAL ENGINEERING DOCUMENT BUT AN ELECTRONIC DUPLICATE. THE ORIGINAL, SIGNED BY THE ENGINEER AND APPROVED FOR RELEASE, IS ON FILE AT THE WASHINGTON STATE DEPARTMENT OF TRANSPORTATION. A COPY MAY BE OBTAINED UPON REQUEST.

TYPICAL GROUNDING DETAILS

STANDARD PLAN J-9a

DATE	REVISION	BY	APPR'D
	Note 3, change "connectors" to "conductors".	ABN	

APPROVED FOR PUBLICATION

Clifford E. Mansfield *04-24-98*

DEPUTY STATE DESIGN ENGINEER — DATE

WASHINGTON STATE DEPARTMENT OF TRANSPORTATION
OLYMPIA, WASHINGTON

EFFECTIVE: APRIL 2, 2007 TO JANUARY 6, 2008

EFFECTIVE: APRIL 2, 2007 TO JANUARY 6, 2008
EFFECTIVE: APRIL 2, 2007 TO JANUARY 6, 2008

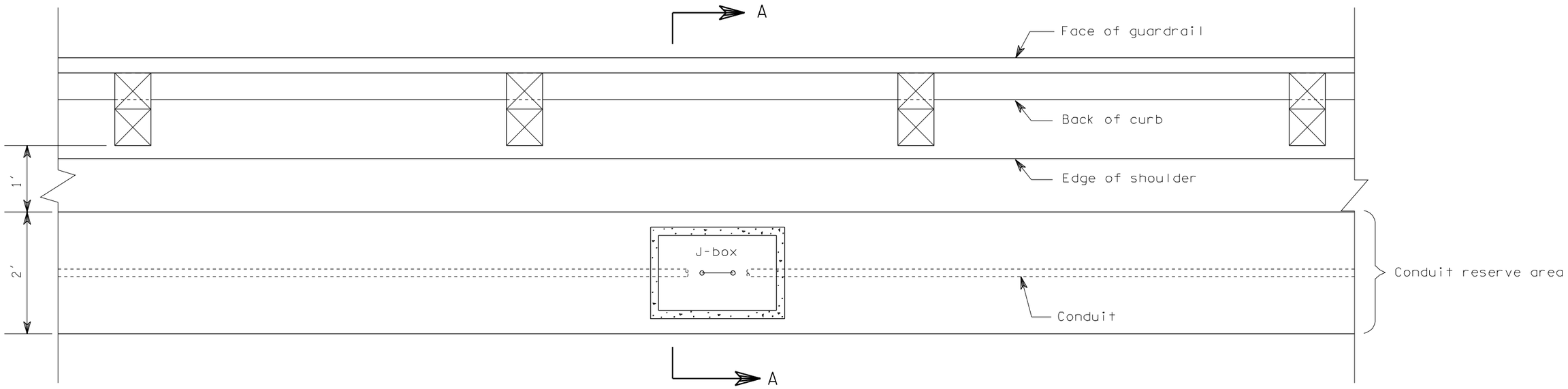

PLAN

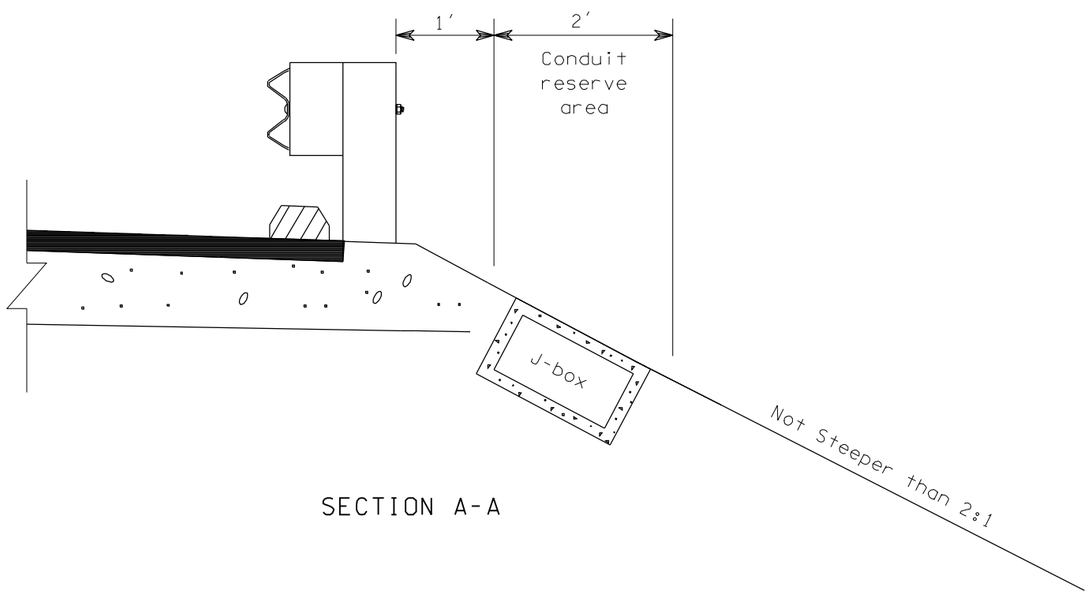

SECTION A-A

ELECTRICAL CONDUIT PLACEMENT

WILLIAM D. BROWN
STATE OF WASHINGTON
0014812
REGISTERED
PROFESSIONAL ENGINEER
EXPIRES SEPT 10, 1998

NOTE: THIS PLAN IS NOT A LEGAL ENGINEERING DOCUMENT BUT AN ELECTRONIC DUPLICATE. THE ORIGINAL, SIGNED BY THE ENGINEER AND APPROVED FOR PUBLICATION, IS KEPT ON FILE AT THE WASHINGTON STATE DEPARTMENT OF TRANSPORTATION. A COPY MAY BE OBTAINED UPON REQUEST.

STANDARD PLAN J-10

APPROVED FOR PUBLICATION

Clifford E. Mansfield — STATE DESIGN ENGINEER

07-18-97 — DATE

WASHINGTON STATE DEPARTMENT OF TRANSPORTATION
OLYMPIA, WASHINGTON

EFFECTIVE: APRIL 2, 2007 TO JANUARY 6, 2008
EFFECTIVE: APRIL 2, 2007 TO JANUARY 6, 2008
EFFECTIVE: APRIL 2, 2007 TO JANUARY 6, 2008
EFFECTIVE: APRIL 2, 2007 TO JANUARY 6, 2008

EFFECTIVE: APRIL 2, 2007 TO JANUARY 6, 2008

EFFECTIVE: APRIL 2, 2007 TO JANUARY 6, 2008

DRAWN BY: ELENA BRUNSTEIN

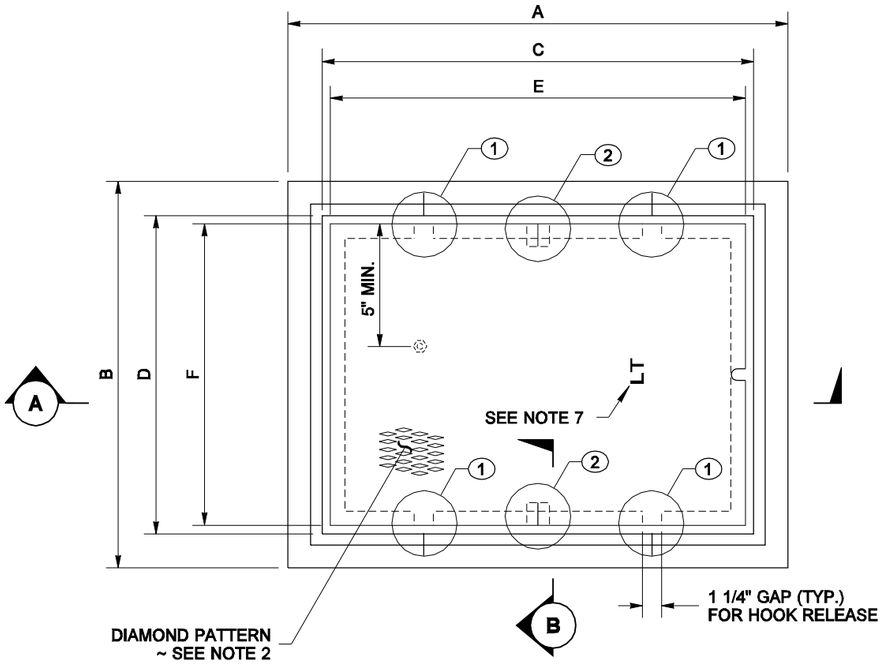

TOP VIEW

JUNCTION BOX DIMENSION TABLE			
MARK	ITEM	BOX TYPE	
		TYPE 1	TYPE 2
A	OUTSIDE LENGTH OF JUNCTION BOX	22"	33"
B	OUTSIDE WIDTH OF JUNCTION BOX	17"	22 1/2"
C	INSIDE LENGTH OF JUNCTION BOX	18" ~ 19"	29" ~ 30"
D	INSIDE WIDTH OF JUNCTION BOX	13" ~ 14"	18 1/2" ~ 19 1/2"
E	LID LENGTH	17 5/8"	28 5/8"
F	LID WIDTH	12 5/8"	18 1/8"
CAPACITY ~ CONDUIT DIAMETER		6"	12"

NOTES

1. All box dimensions are approximate. Exact configurations vary among manufacturers.
2. The lid thicknesses are minimum. The diamond pattern shall be 28% minimum of overall thickness.
3. Lid support members shall be 3/16" minimum thick steel C, L, or T shape, welded to the frame.
4. A 1/4-20NC × 3/4" S.S. ground stud shall be welded to the bottom of the lid; include S.S. nut and flat washer.
5. Bolts and nuts shall be liberally coated with anti-seize compound.
6. Connect a bonding jumper to steel conduit bushing for GRS conduit; connect to equipment grounding conductor for PVC conduit. Bonding Jumper shall be #8 min. × 4' of tinned braided copper.
7. The System Identification letters shall be 1/8" line thickness formed by engraving, stamping, or with a S.S. weld bead. Grind off diamond pattern before forming letters. See System Identification Detail.
8. The Junction Box Type 2 shall be provided with a 12" deep extension when specified in the Contract.
9. See the Standard Specifications for alternative reinforcement and class of concrete.

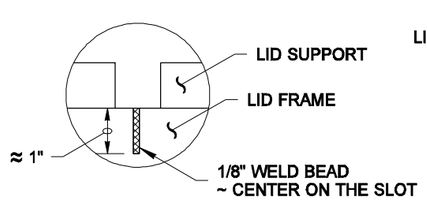

FRAME SLOT MARK (1)

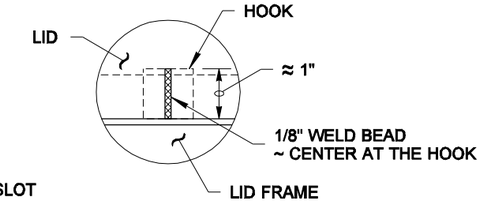

LID HOOK MARK (2)

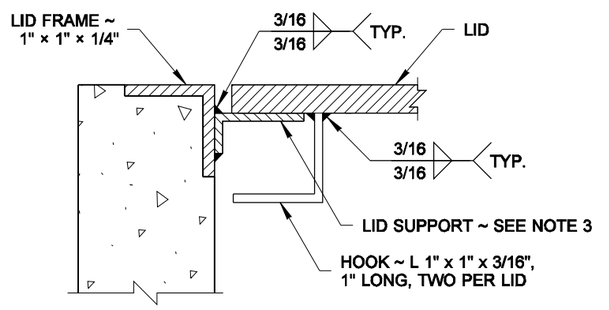

SECTION (B)

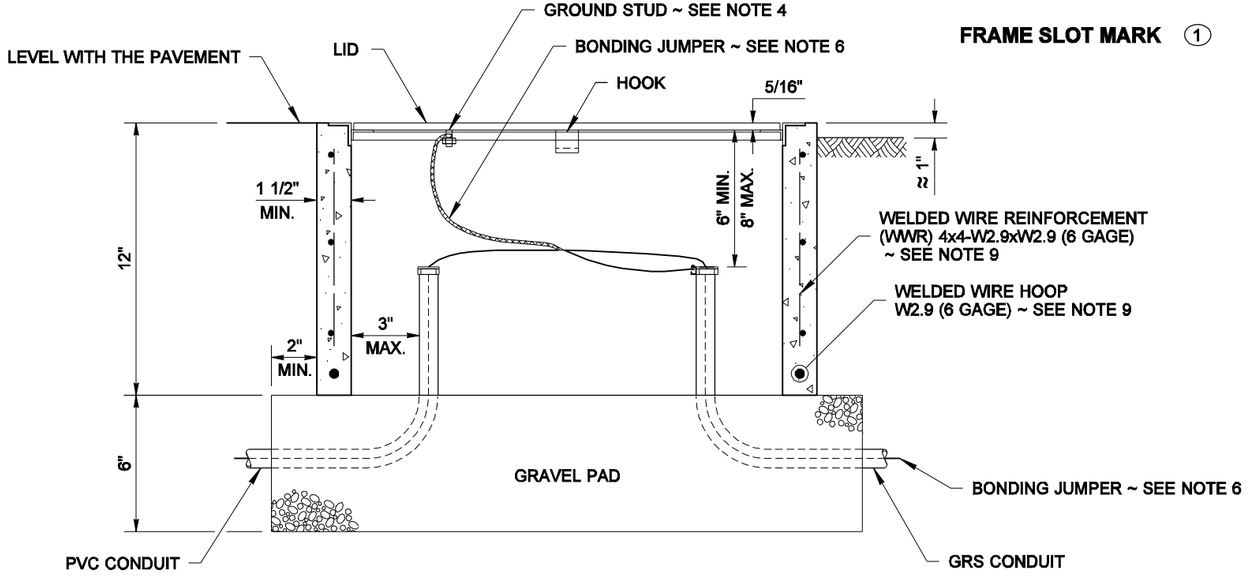

SECTION (A)

SYSTEM IDENTIFICATION DETAIL

≈ 1" (TYP.) ITS ≈ 1" (TYP.)

INTELLIGENT TRANSPORTATION SYSTEM

COMM
COMMUNICATION SYSTEM

LT
LIGHTING SYSTEM

TS
TRAFFIC SIGNAL SYSTEM

TEL
TELEPHONE SYSTEM

R. SCOTT ZELLER
STATE OF WASHINGTON
28680
REGISTERED
PROFESSIONAL ENGINEER

EXPIRES MAY 5, 2007

NOTE: THIS PLAN IS NOT A LEGAL ENGINEERING DOCUMENT BUT AN ELECTRONIC DUPLICATE. THE ORIGINAL, SIGNED BY THE ENGINEER AND APPROVED FOR PUBLICATION, IS KEPT ON FILE AT THE WASHINGTON STATE DEPARTMENT OF TRANSPORTATION. A COPY MAY BE OBTAINED UPON REQUEST.

STANDARD JUNCTION BOX TYPES 1 & 2

STANDARD PLAN J-11a

SHEET 1 OF 1 SHEET

APPROVED FOR PUBLICATION

Harold J. Peterfeso — STATE DESIGN ENGINEER

09-02-05 — DATE

Washington State Department of Transportation

EFFECTIVE: APRIL 2, 2007 TO JANUARY 6, 2008

EFFECTIVE: APRIL 2, 2007 TO JANUARY 6, 2008

EFFECTIVE: APRIL 2, 2007 TO JANUARY 6, 2008

EFFECTIVE: APRIL 2, 2007 TO JANUARY 6, 2008

DRAWN BY: ELENA BRUNSTEIN

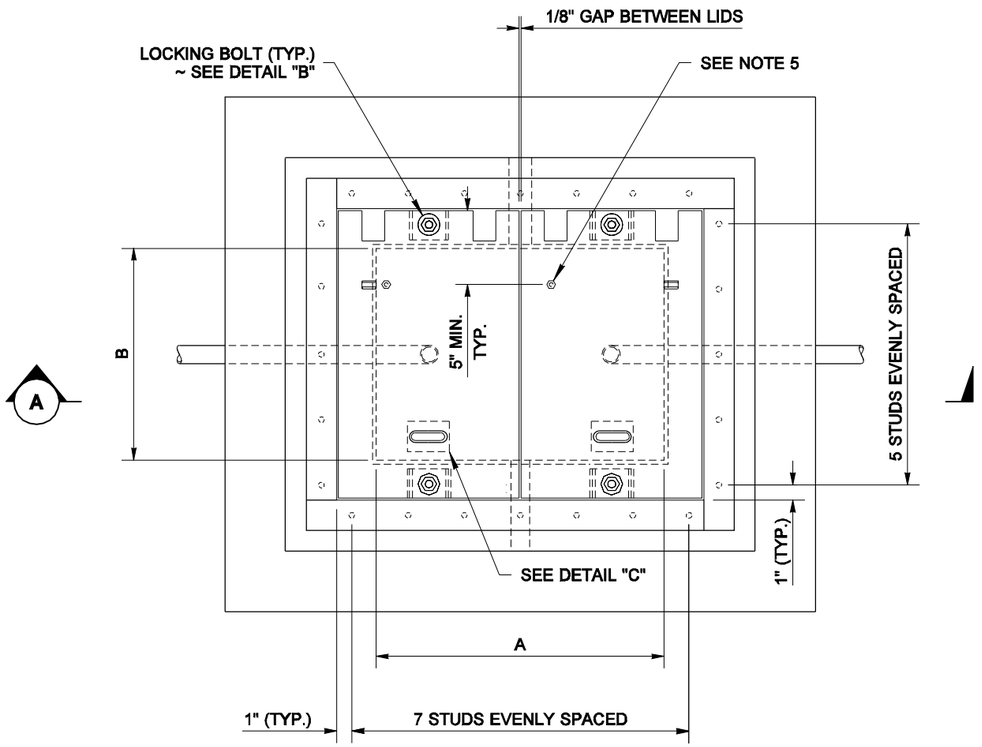

MARK	ITEM	BOX TYPE		
		TYPE 4	TYPE 5	TYPE 6
A	BOX INSIDE LENGTH	19"	28"	36"
B	BOX INSIDE WIDTH	14"	17"	24"
C	LID LENGTH	19"	22"	29"
D	LID WIDTH	11 15/16"	16 7/16"	20 7/16"
W	STIFFENER SPACING	4"	5 1/2"	6 3/4"
X	STIFFENER LENGTH	3 1/16"	4 9/16"	5 43/48"
Y	STIFFENER SPACING	6"	7"	9 1/2"
Z	STIFFENER LENGTH	18 1/4"	21 1/4"	28 1/4"
CAPACITY ~ CONDUIT DIAM.		6"	12"	24"

JUNCTION BOX DIMENSION TABLE

NOTES

1. All box dimensions are approximate. Exact configurations vary among manufacturers.
2. All lid thicknesses are minimum. The diamond pattern shall be 3/32" minimum thick.
3. Lid stiffener plates shall bear on frame. Mill to bearing seat and perimeter bar for full even contact after fabrication of frame and lid. Lid and frame units with uneven bearing will be rejected.
4. The installed lid and frame shall fit with full even contact around the perimeter of a junction box after installation. Care shall be taken to prevent debris accumulation on the contact surfaces.
5. A 1/4-20NC × 3/4" S.S. ground stud shall be welded to the bottom of each lid; include S.S. nut and flat washer.
6. The hinges shall allow the lids to open 180°.
7. Bolts and nuts shall be liberally coated with anti-seize compound.
8. Connect a bonding jumper to steel conduit bushing for GRS conduit; connect to equipment grounding conductor for PVC conduit. As an alternative, the bonding jumper shall be attached to the front face of the hinge pocket with a 5/16-20NC × 3/4" bolt, S.S. nut, and flat washer. Bonding Jumper shall be #8 min. × 4' of tinned braided copper.
9. The System Identification letters shall be 1/8" line thickness formed by engraving, stamping, or with a S.S. weld bead. Grind off diamond pattern before forming letters. See System Identification Detail.
10. A 1% tolerance is allowed for all dimensions.
11. See the Standard Specifications for class of concrete.

TOP VIEW

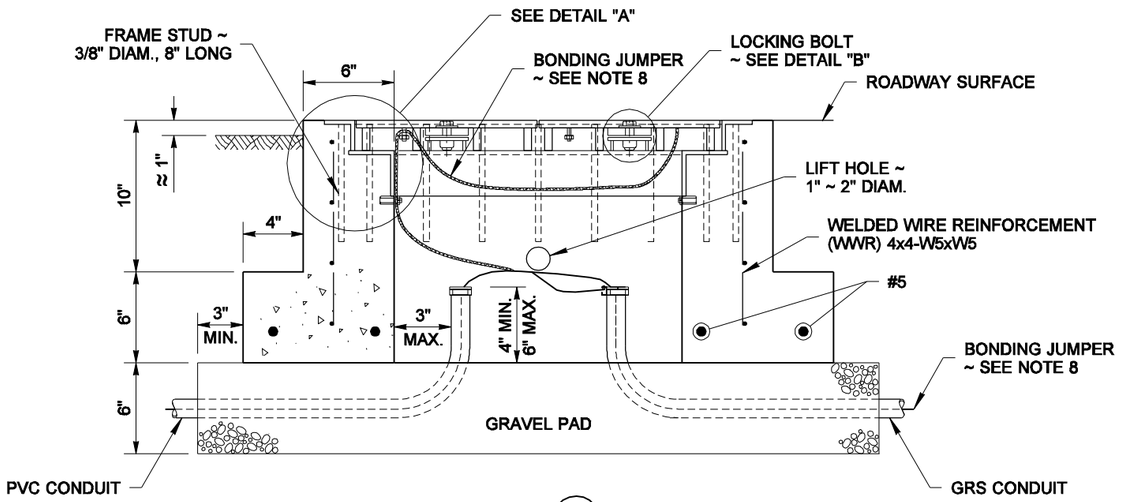

SECTION (A)

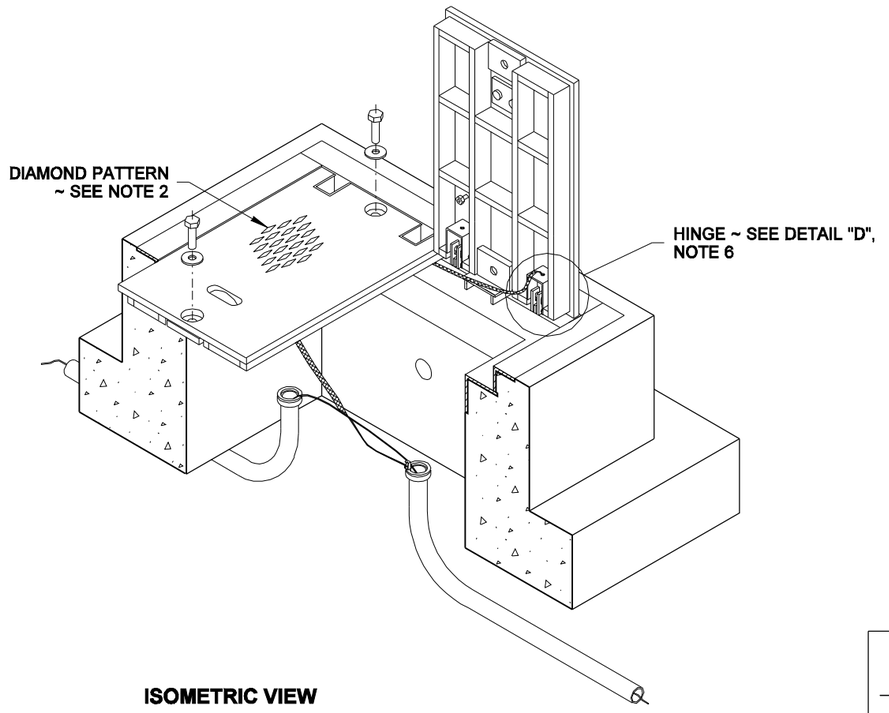

ISOMETRIC VIEW

R. SCOTT ZELLER
STATE OF WASHINGTON
28680
REGISTERED
PROFESSIONAL ENGINEER

EXPIRES MAY 5, 2007

NOTE: THIS PLAN IS NOT A LEGAL ENGINEERING DOCUMENT BUT AN ELECTRONIC DUPLICATE. THE ORIGINAL, SIGNED BY THE ENGINEER AND APPROVED FOR PUBLICATION, IS KEPT ON FILE AT THE WASHINGTON STATE DEPARTMENT OF TRANSPORTATION. A COPY MAY BE OBTAINED UPON REQUEST.

HEAVY DUTY JUNCTION BOX TYPES 4, 5, & 6

STANDARD PLAN J-11b

SHEET 1 OF 2 SHEETS

APPROVED FOR PUBLICATION

Harold J. Peterfeso — STATE DESIGN ENGINEER

09-02-05 — DATE

Washington State Department of Transportation

EFFECTIVE: APRIL 2, 2007 TO JANUARY 6, 2008

EFFECTIVE: APRIL 2, 2007 TO JANUARY 6, 2008

EFFECTIVE: APRIL 2, 2007 TO JANUARY 6, 2008

EFFECTIVE: APRIL 2, 2007 TO JANUARY 6, 2008

DRAWN BY: ELENA BRUNSTEIN

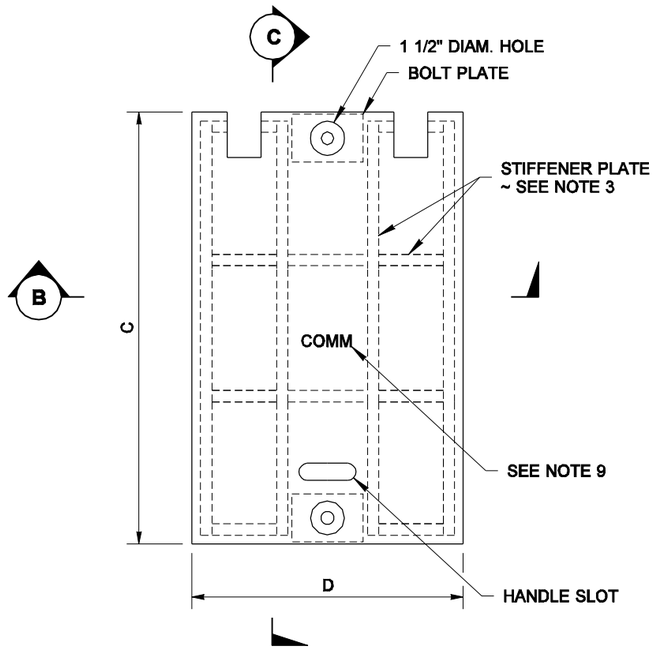

PLAN VIEW

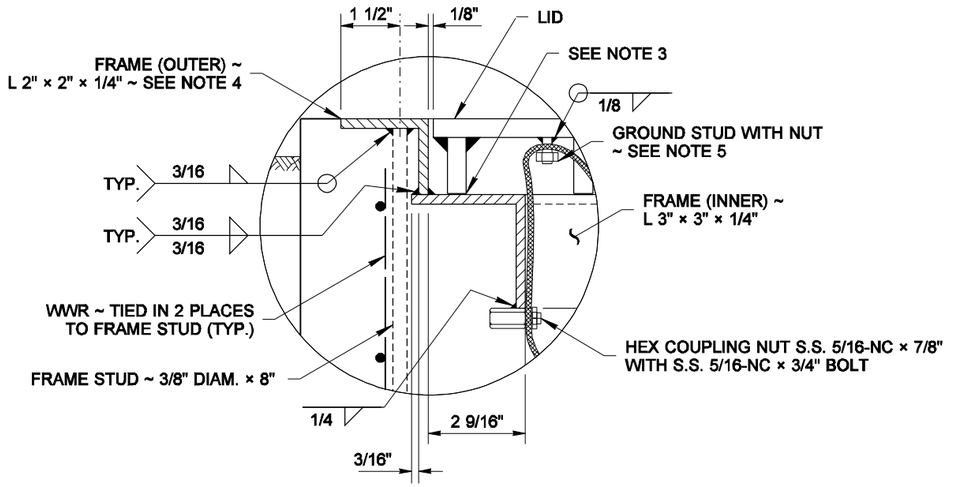

DETAIL "A"

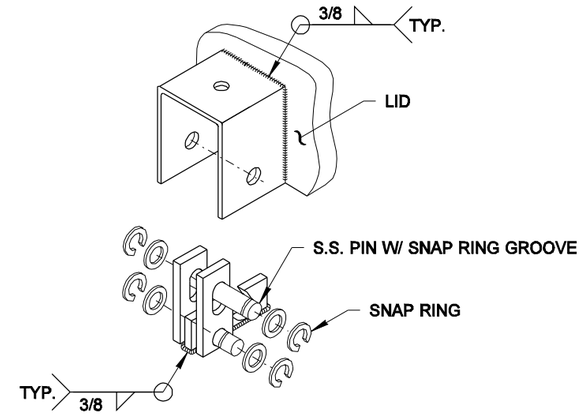

DETAIL "D"
HINGE

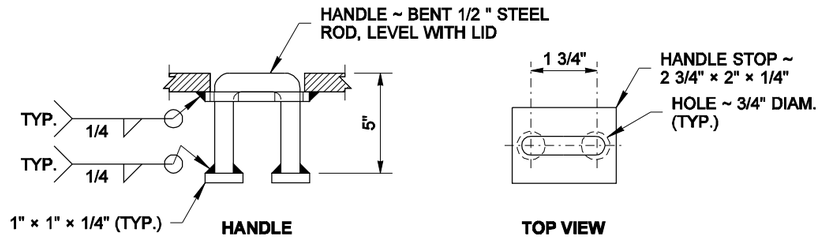

DETAIL "C"

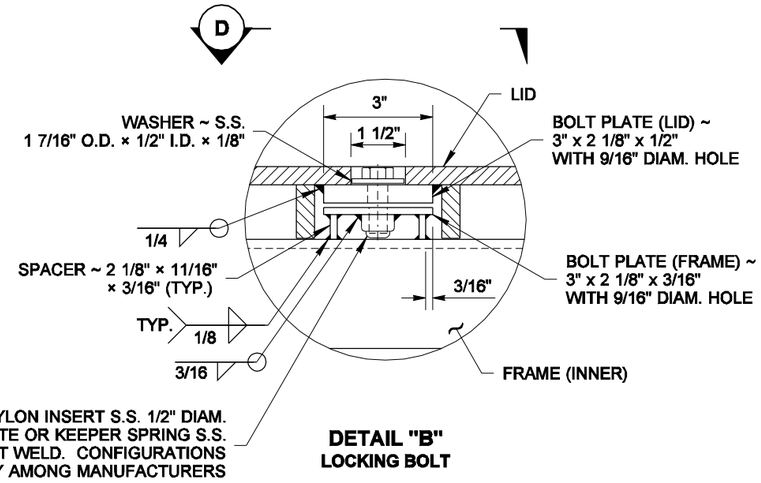

DETAIL "B"
LOCKING BOLT

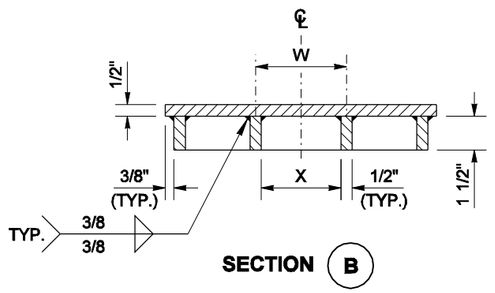

SECTION (B)

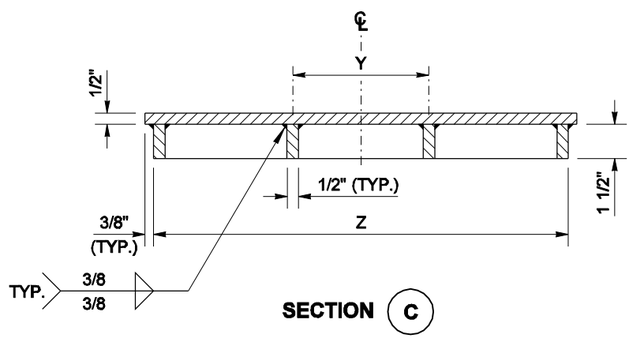

SECTION (C)

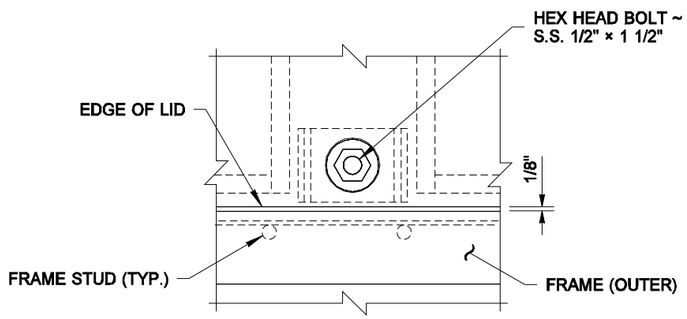

VIEW (D)

SYSTEM IDENTIFICATION DETAIL

≈ 1" (TYP.) ≈ 1" (TYP.)

ITS
INTELLIGENT TRANSPORTATION SYSTEM

COMM
COMMUNICATION SYSTEM

LT
LIGHTING SYSTEM

TS
TRAFFIC SIGNAL SYSTEM

TEL
TELEPHONE SYSTEM

R. SCOTT ZELLER
STATE OF WASHINGTON
28680
REGISTERED
PROFESSIONAL ENGINEER

EXPIRES MAY 5, 2007

NOTE: THIS PLAN IS NOT A LEGAL ENGINEERING DOCUMENT BUT AN ELECTRONIC DUPLICATE. THE ORIGINAL, SIGNED BY THE ENGINEER AND APPROVED FOR PUBLICATION, IS KEPT ON FILE AT THE WASHINGTON STATE DEPARTMENT OF TRANSPORTATION. A COPY MAY BE OBTAINED UPON REQUEST.

HEAVY DUTY JUNCTION BOX TYPES 4, 5, & 6

STANDARD PLAN J-11b

SHEET 2 OF 2 SHEETS

APPROVED FOR PUBLICATION

Harold J. Peterfeso — STATE DESIGN ENGINEER
09-02-05 — DATE

Washington State Department of Transportation

EFFECTIVE: APRIL 2, 2007 TO JANUARY 6, 2008

EFFECTIVE: APRIL 2, 2007 TO JANUARY 6, 2008

EFFECTIVE: APRIL 2, 2007 TO JANUARY 6, 2008

EFFECTIVE: APRIL 2, 2007 TO JANUARY 6, 2008

EFFECTIVE: APRIL 2, 2007 TO JANUARY 6, 2008

DRAWN BY: ELENA BRUNSTEIN

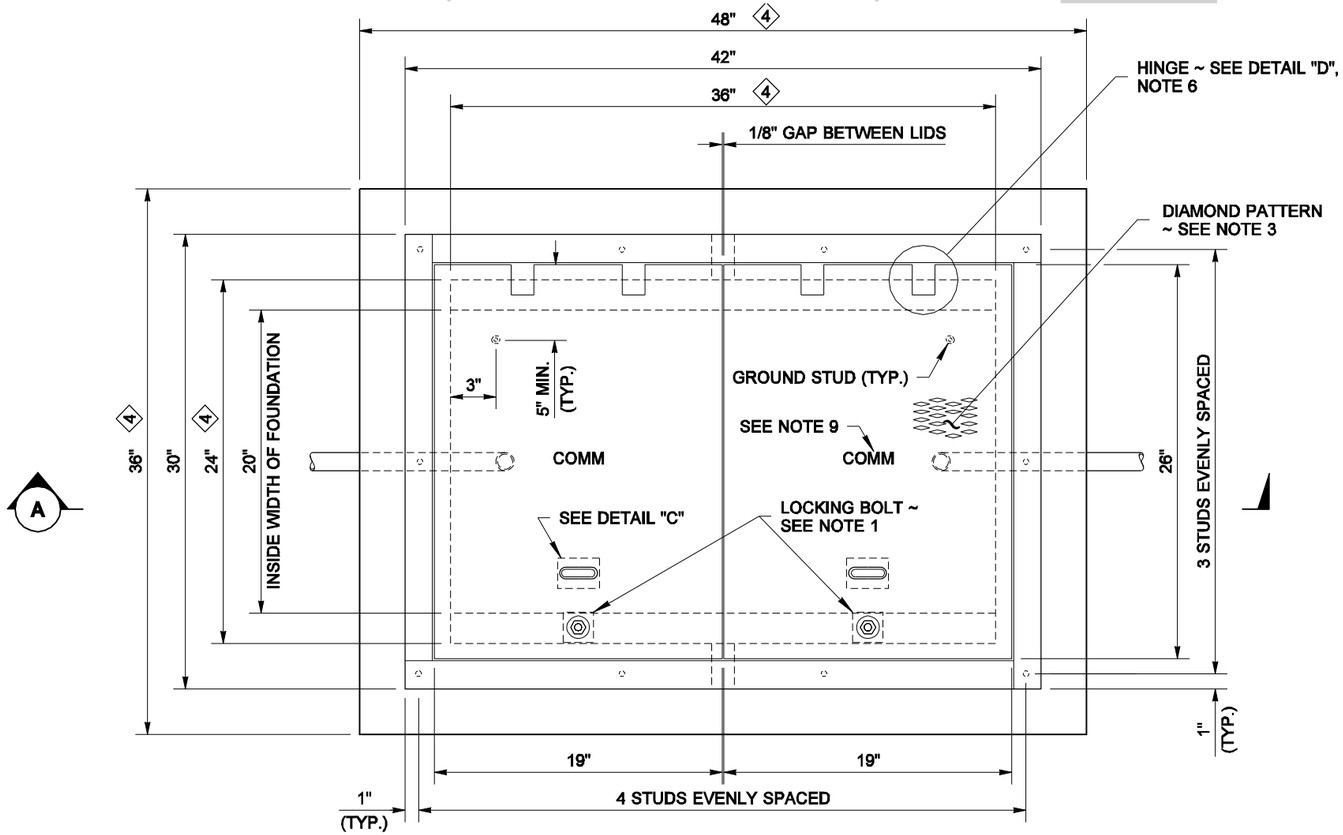

TOP VIEW
USE LOCKING BOLTS ONLY FOR TYPE 8

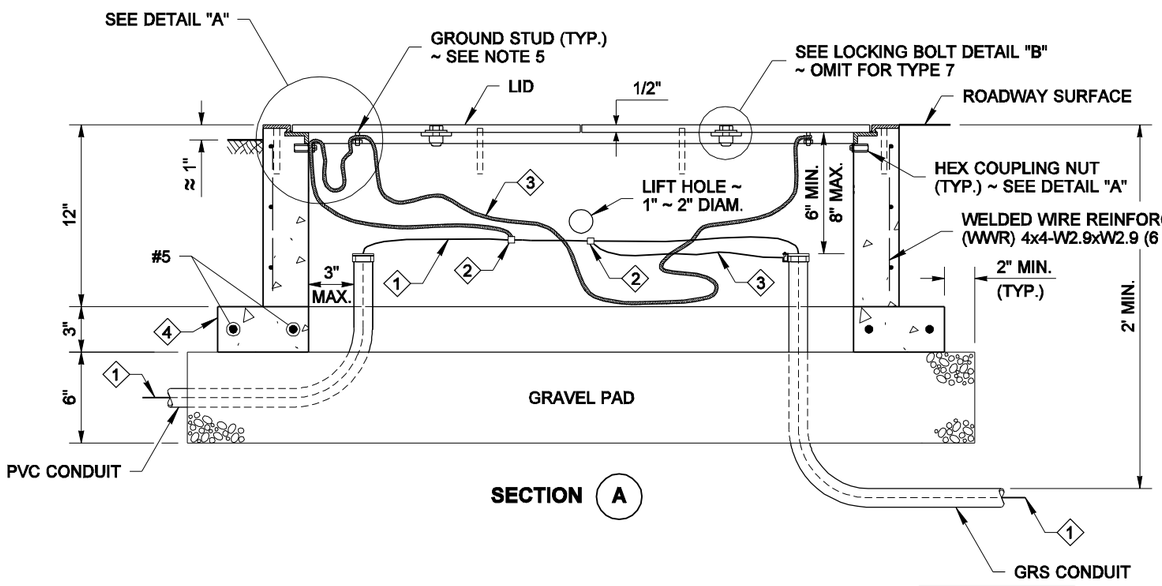

NOTES

1. Junction boxes type 7 and type 8 are identical except for the addition of locking bolts on the type 8.
2. All box dimensions are approximate. Exact configurations vary among manufacturers.
3. All lid thicknesses are minimum. The diamond pattern shall be 3/32" minimum thick.
4. Lid support members shall be 3/16" min. thick steel C, L, or T shape, welded to the frame. Exact configurations vary among manufacturers.
5. A 1/4-20NC × 3/4" S.S. ground stud shall be welded to the bottom of each lid; include S.S. nut and flat washer.
6. The hinges shall allow the lids to open 180°.
7. Bolts and nuts shall be liberally coated with anti-seize compound.
8. Connect an equipment bonding jumper to steel conduit bushing for GRS conduit; connect to equipment grounding conductor for PVC conduit. As an alternative to the ground stud connection, the equipment bonding jumper shall be attached to the front face of the hinge pocket with a 5/16-20NC × 3/4" S.S. bolt, nut, and flat washer. Equipment Bonding Jumper shall be #8 min. × 4' of tinned braided copper.
9. The System Identification letters shall be 1/8" line thickness formed by engraving, stamping, or with a S.S. weld bead. Grind off diamond pattern before forming letters. See System Identification Detail.
10. See the Standard Specifications for alternative reinforcement and class of concrete.
11. Capacity ~ conduit diameter = 24"

① Equipment grounding conductor
② Copper split bolt clamp
③ Equipment bonding jumper ~ see note 8
④ Foundation

THEODORE J. TREPANIER
STATE OF WASHINGTON
25335
REGISTERED
PROFESSIONAL ENGINEER
EXPIRES AUGUST 9, 2007

NOTE: THIS PLAN IS NOT A LEGAL ENGINEERING DOCUMENT BUT AN ELECTRONIC DUPLICATE. THE ORIGINAL, SIGNED BY THE ENGINEER AND APPROVED FOR PUBLICATION, IS KEPT ON FILE AT THE WASHINGTON STATE DEPARTMENT OF TRANSPORTATION. A COPY MAY BE OBTAINED UPON REQUEST.

STANDARD DUTY JUNCTION BOX TYPES 7 & 8

STANDARD PLAN J-11c

SHEET 1 OF 2 SHEET

APPROVED FOR PUBLICATION

Harold J. Peterfeso — STATE DESIGN ENGINEER — *06-21-06* — DATE

Washington State Department of Transportation

EFFECTIVE: APRIL 2, 2007 TO JANUARY 6, 2008

DRAWN BY: ELENA BRUNSTEIN

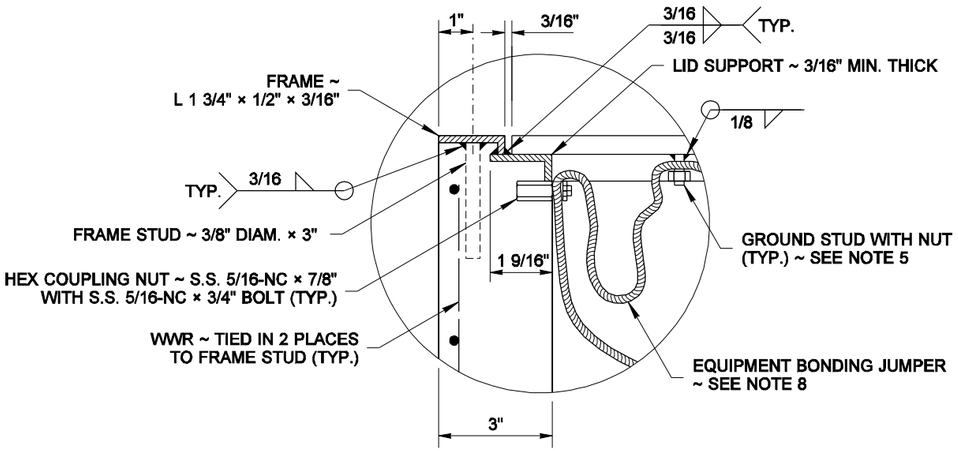

DETAIL "A"

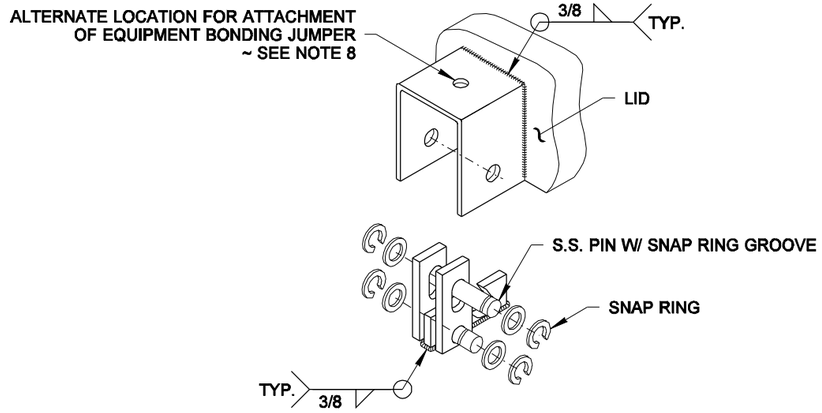

DETAIL "D"
HINGE

SYSTEM IDENTIFICATION DETAIL

≈ 1" (TYP.) ITS ≈ 1" (TYP.)

INTELLIGENT TRANSPORTATION SYSTEM

COMM
COMMUNICATION SYSTEM

LT
LIGHTING SYSTEM

TS
TRAFFIC SIGNAL SYSTEM

TEL
TELEPHONE SYSTEM

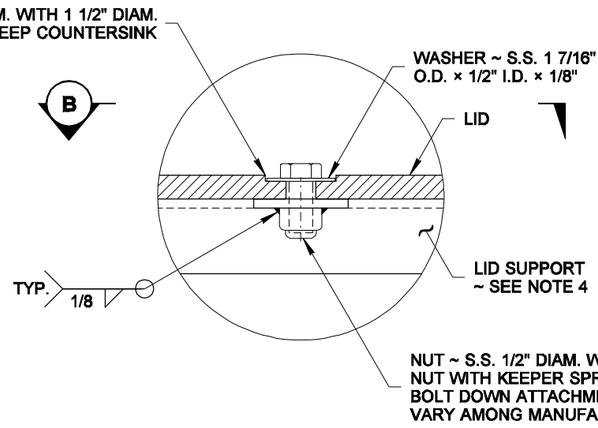

DETAIL "B"
LOCKING BOLT
OMIT FOR TYPE 7

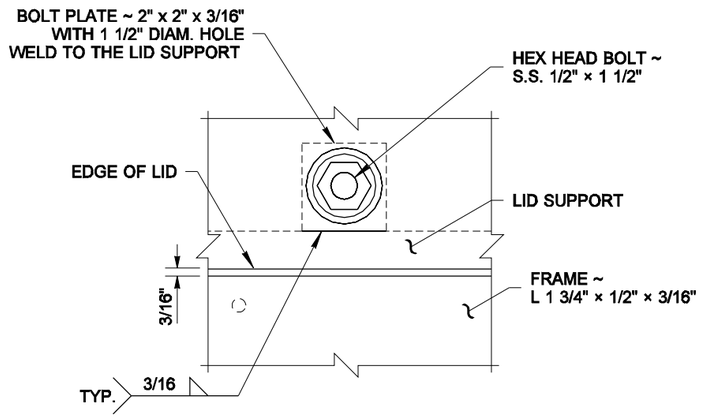

VIEW (B)

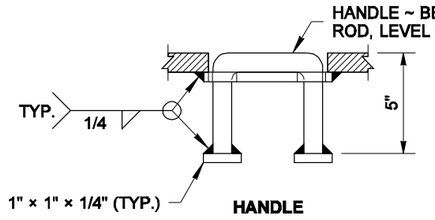

HANDLE

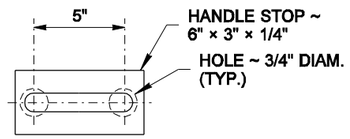

TOP VIEW

DETAIL "C"

THEODORE J. TREPANIER
STATE OF WASHINGTON
25335
REGISTERED
PROFESSIONAL ENGINEER

EXPIRES AUGUST 9, 2007

NOTE: THIS PLAN IS NOT A LEGAL ENGINEERING DOCUMENT BUT AN ELECTRONIC DUPLICATE. THE ORIGINAL, SIGNED BY THE ENGINEER, AND APPROVED FOR PUBLICATION, IS KEPT ON FILE AT THE WASHINGTON STATE DEPARTMENT OF TRANSPORTATION. A COPY MAY BE OBTAINED UPON REQUEST.

STANDARD DUTY JUNCTION BOX TYPES 7 & 8

STANDARD PLAN J-11c

SHEET 2 OF 2 SHEETS

APPROVED FOR PUBLICATION

Harold J. Peterfeso — STATE DESIGN ENGINEER

06-21-06 — DATE

Washington State Department of Transportation

EFFECTIVE: APRIL 2, 2007 TO JANUARY 6, 2008

EFFECTIVE: APRIL 2, 2007 TO JANUARY 6, 2008

DRAWN BY: MARK SUJKA

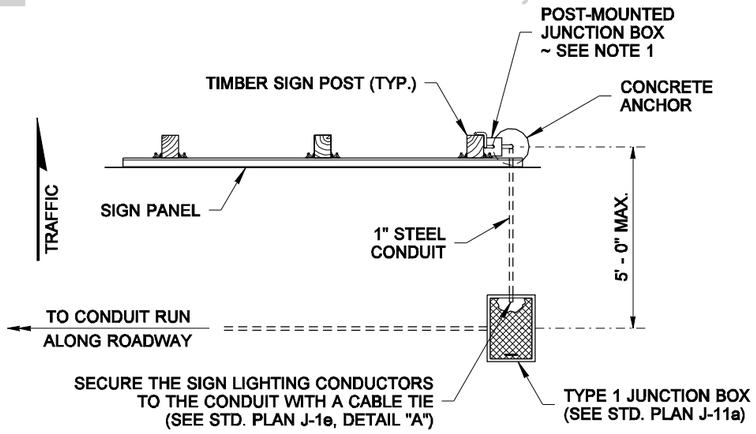

PLAN

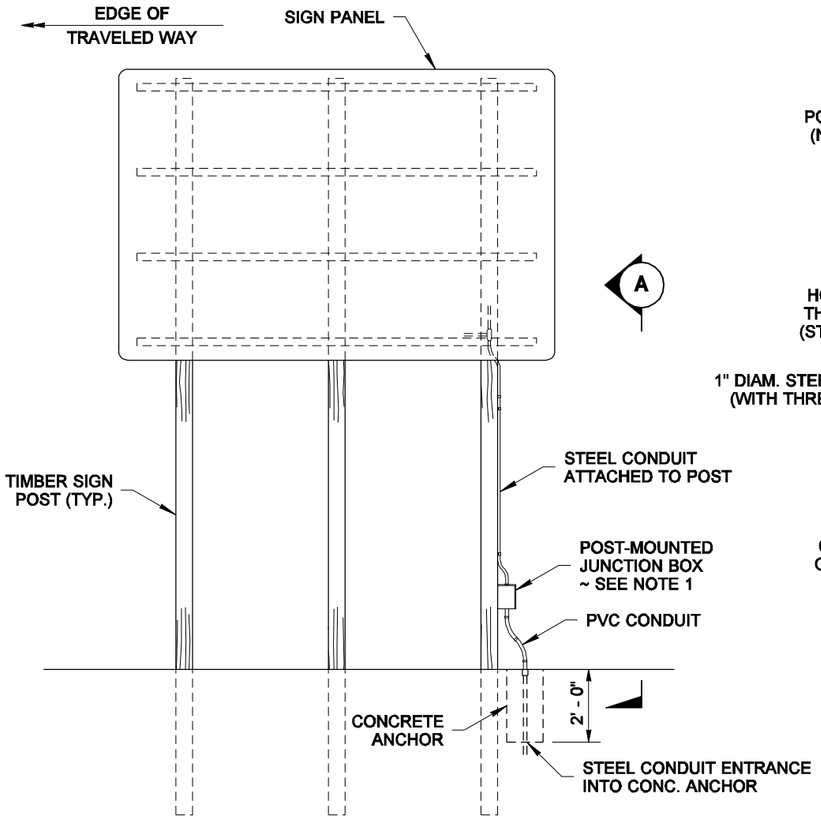

ELEVATION

JUNCTION BOX ATTACHMENT TO TIMBER SIGN SUPPORT

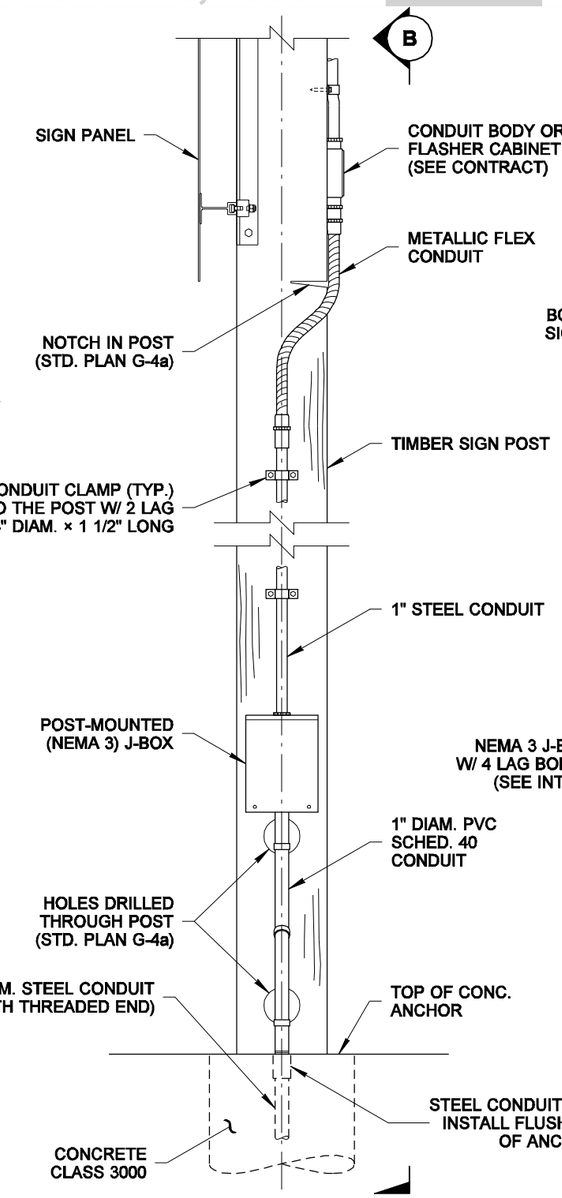

DETAIL VIEW (A)

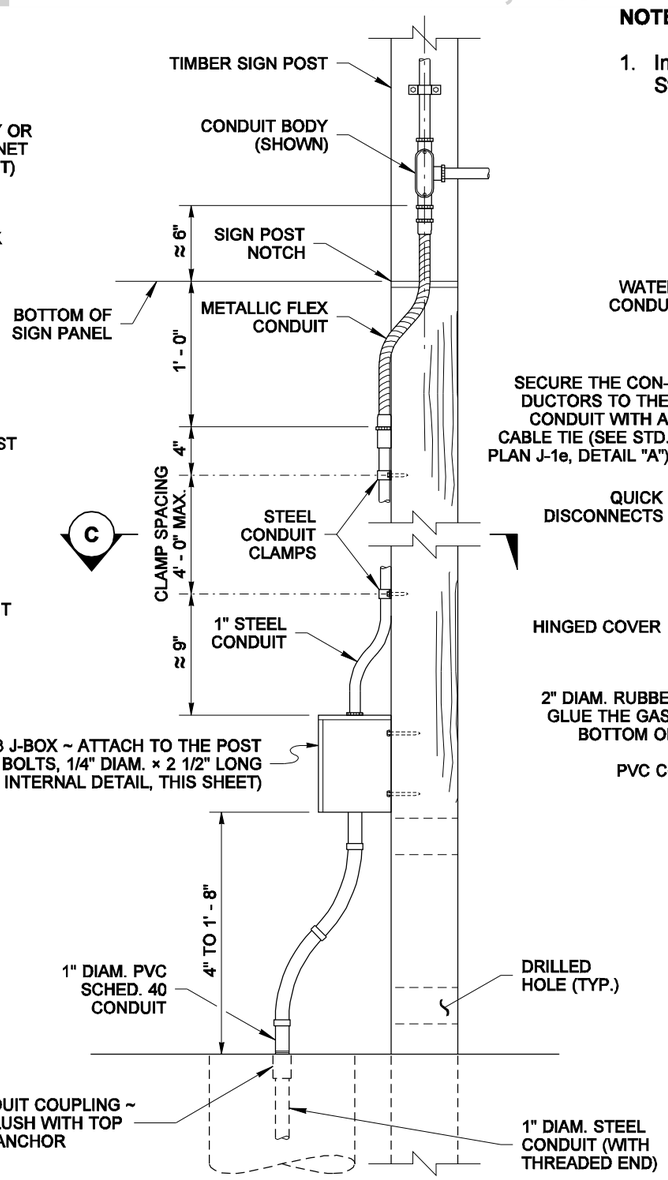

DETAIL VIEW (B)

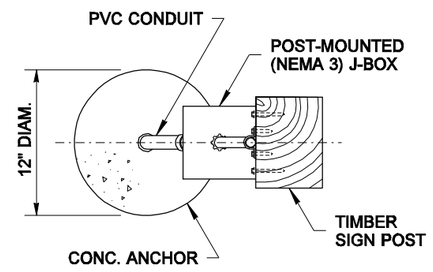

SECTION (C)

NOTE

1. Install the Junction Box on the Timber Sign Post, or the Steel Sign Support, that is farthest from the roadway.

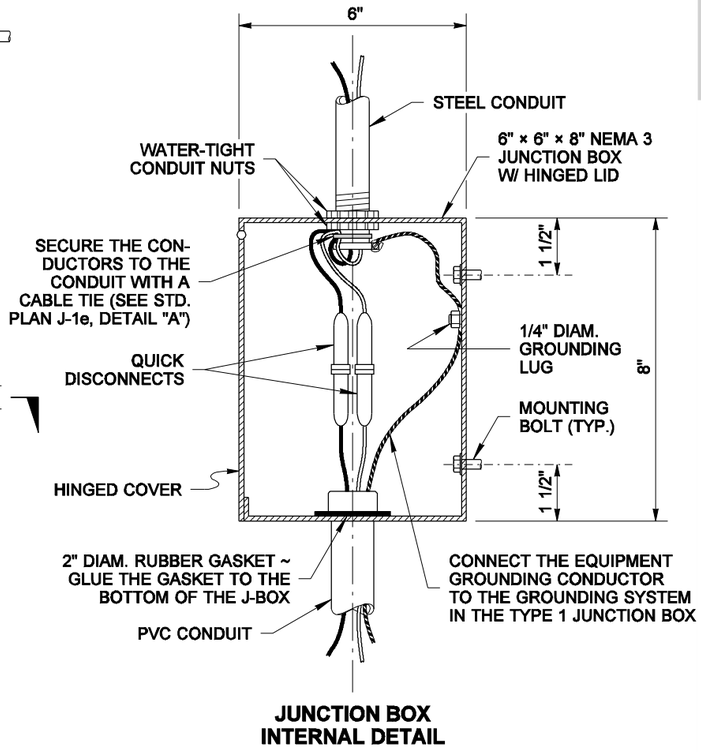

JUNCTION BOX INTERNAL DETAIL

R. SCOTT ZELLER
STATE OF WASHINGTON
28680
REGISTERED
PROFESSIONAL ENGINEER

EXPIRES MAY 5, 2007

NOTE: THIS PLAN IS NOT A LEGAL ENGINEERING DOCUMENT BUT AN ELECTRONIC DUPLICATE. THE ORIGINAL, SIGNED BY THE ENGINEER AND APPROVED FOR PUBLICATION, IS KEPT ON FILE AT THE WASHINGTON STATE DEPARTMENT OF TRANSPORTATION. A COPY MAY BE OBTAINED UPON REQUEST.

SIGN POST-MOUNTED JUNCTION BOX

STANDARD PLAN J-12

SHEET 1 OF 2 SHEETS

APPROVED FOR PUBLICATION

Harold J. Peterfeso — STATE DESIGN ENGINEER

11-08-05 — DATE

Washington State Department of Transportation

EFFECTIVE: APRIL 2, 2007 TO JANUARY 6, 2008

EFFECTIVE: APRIL 2, 2007 TO JANUARY 6, 2008

DRAWN BY: MARK SUJKA

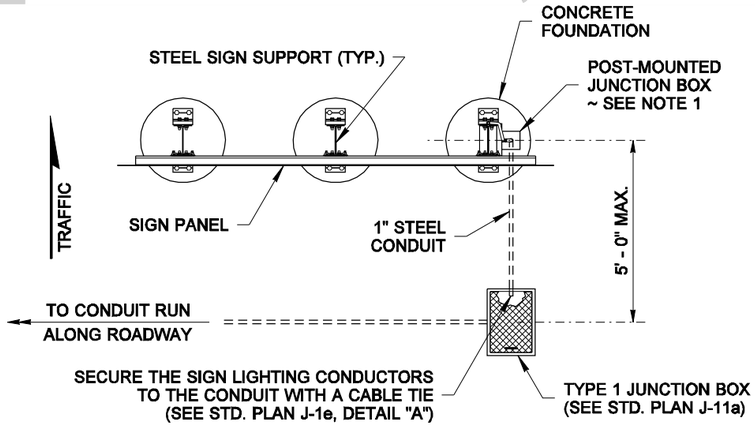

PLAN

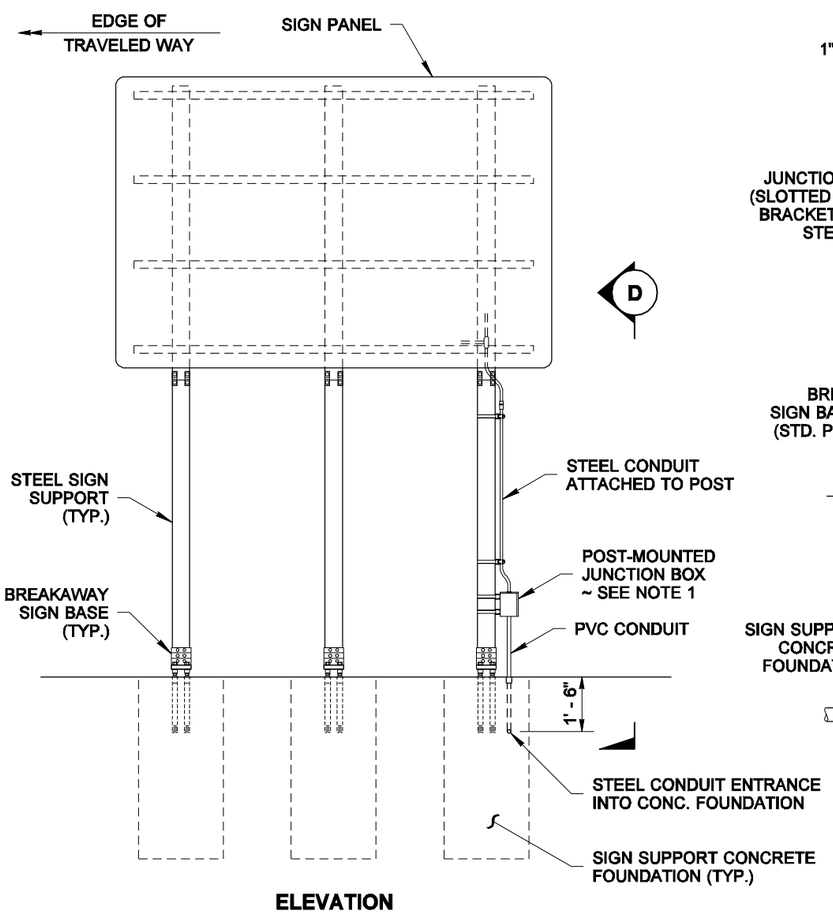

ELEVATION

JUNCTION BOX ATTACHMENT TO STEEL SIGN SUPPORT

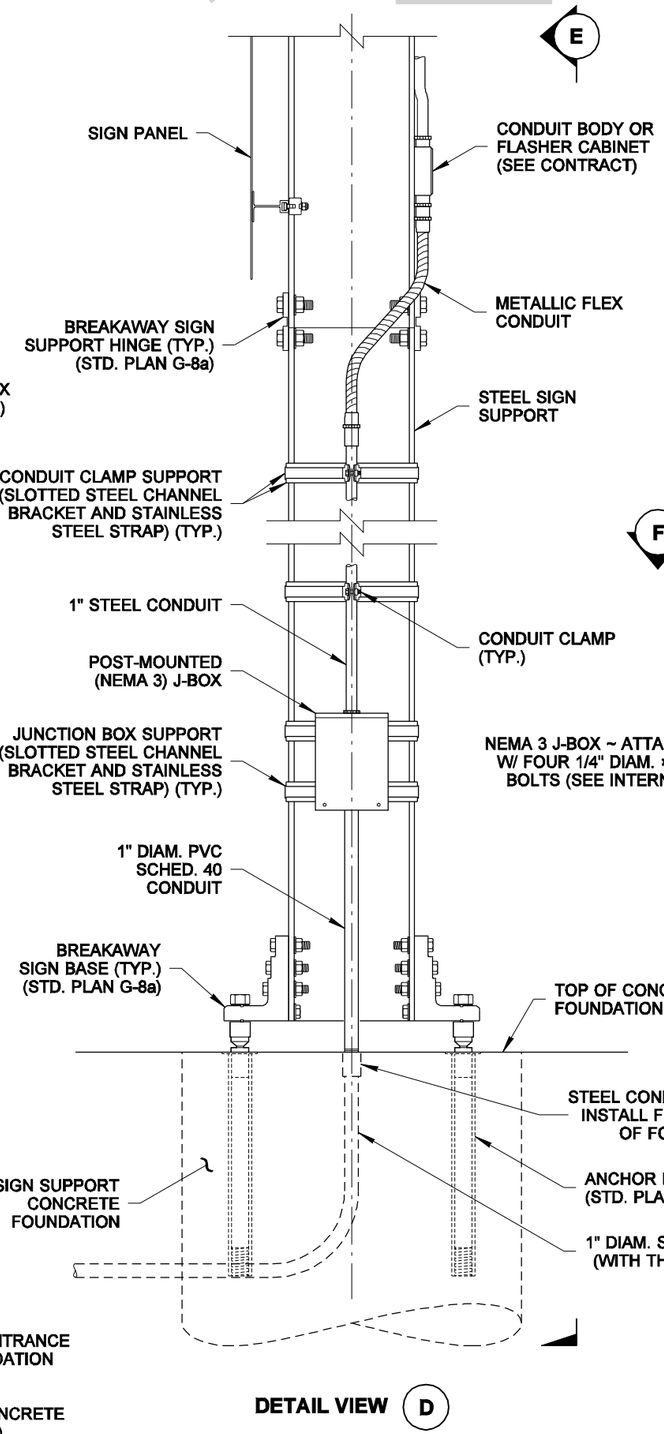

DETAIL VIEW (D)

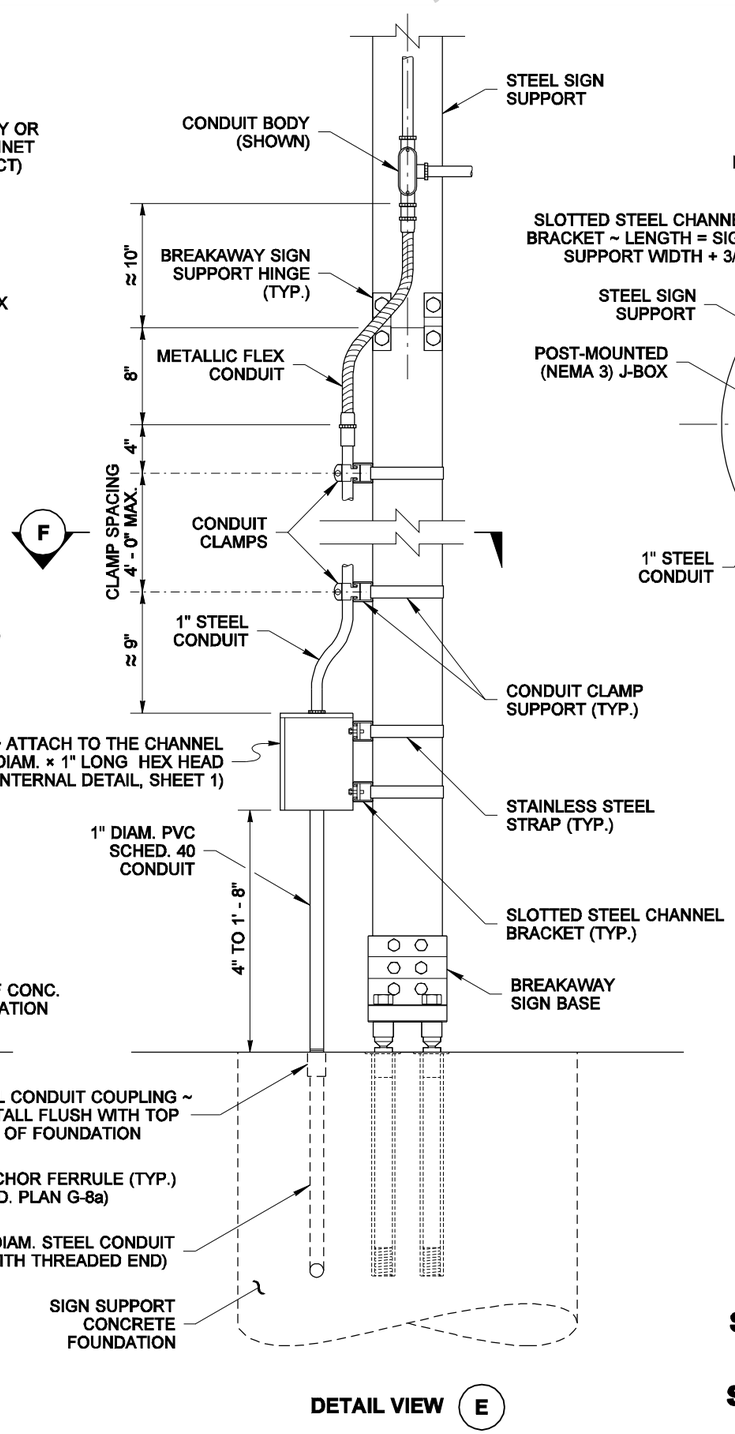

DETAIL VIEW (E)

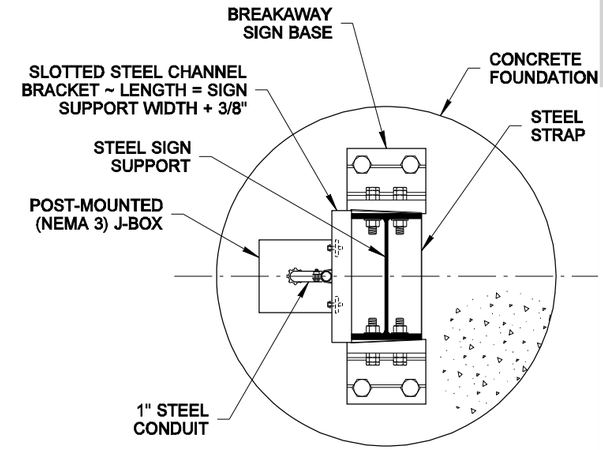

SECTION (F)

R. SCOTT ZELLER
STATE OF WASHINGTON
28680
REGISTERED
PROFESSIONAL ENGINEER

EXPIRES MAY 5, 2007

NOTE: THIS PLAN IS NOT A LEGAL ENGINEERING DOCUMENT BUT AN ELECTRONIC DUPLICATE. THE ORIGINAL, SIGNED BY THE ENGINEER AND APPROVED FOR PUBLICATION, IS KEPT ON FILE AT THE WASHINGTON STATE DEPARTMENT OF TRANSPORTATION. A COPY MAY BE OBTAINED UPON REQUEST.

SIGN POST-MOUNTED JUNCTION BOX

STANDARD PLAN J-12

SHEET 2 OF 2 SHEETS

APPROVED FOR PUBLICATION

Harold J. Peterfeso — STATE DESIGN ENGINEER

11-08-05 — DATE

Washington State Department of Transportation

EFFECTIVE: APRIL 2, 2007 TO JANUARY 6, 2008

EFFECTIVE: APRIL 2, 2007 TO JANUARY 6, 2008

EFFECTIVE: APRIL 2, 2007 TO JANUARY 6, 2008

DRAWN BY: ELENA BRUNSTEIN

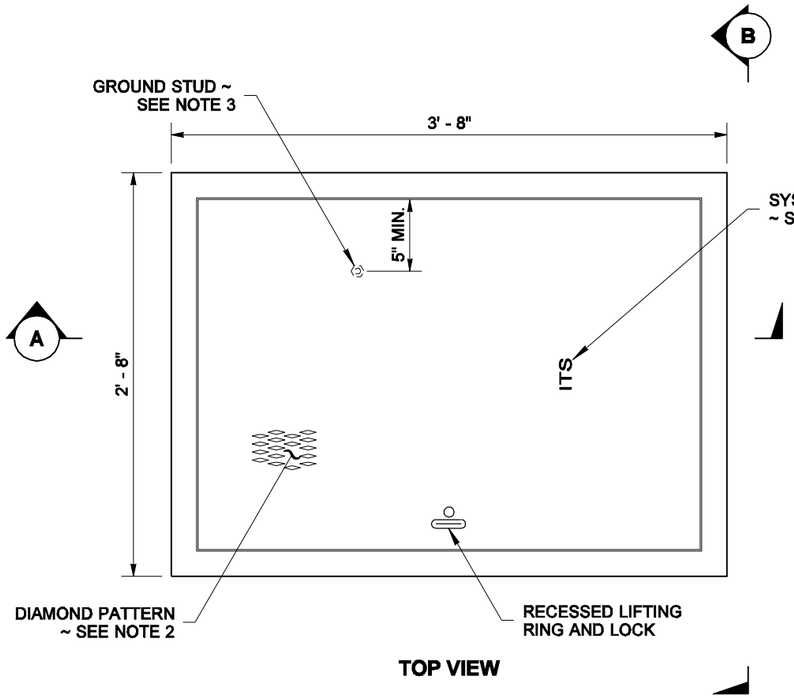

TOP VIEW

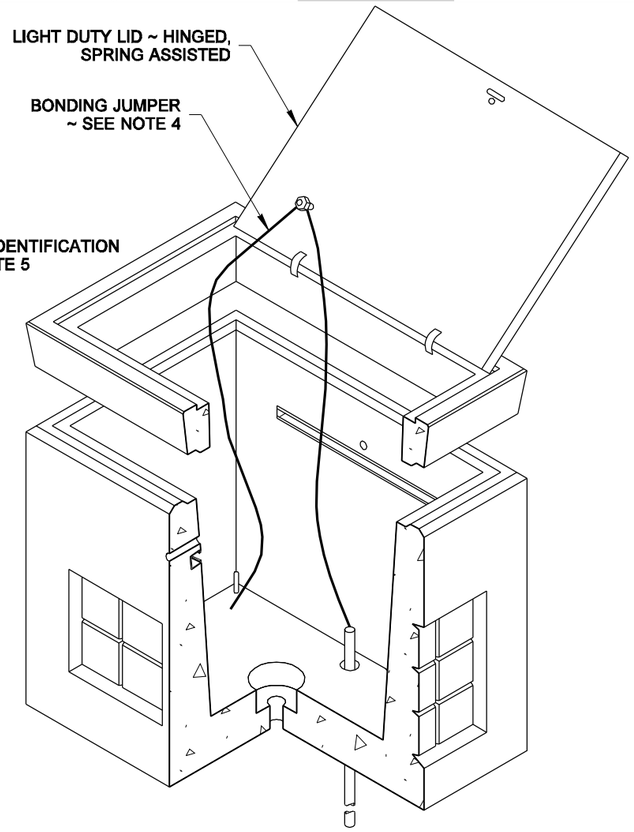

ISOMETRIC CUTAWAY VIEW

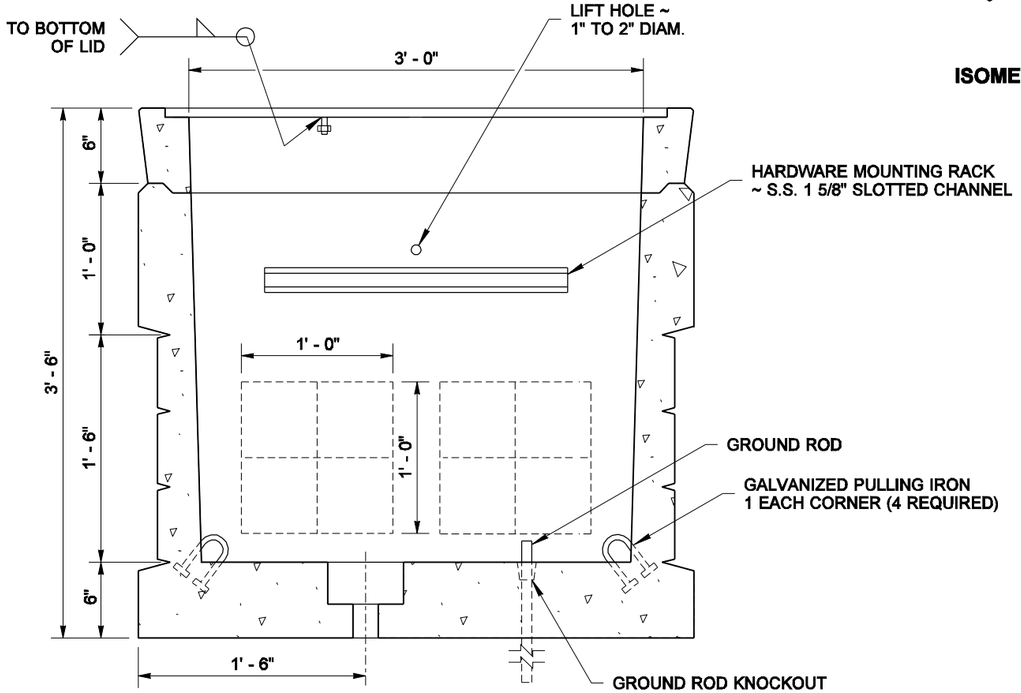

SECTION (A)

PULL BOX
(SHOWN WITH LIGHT DUTY LID)

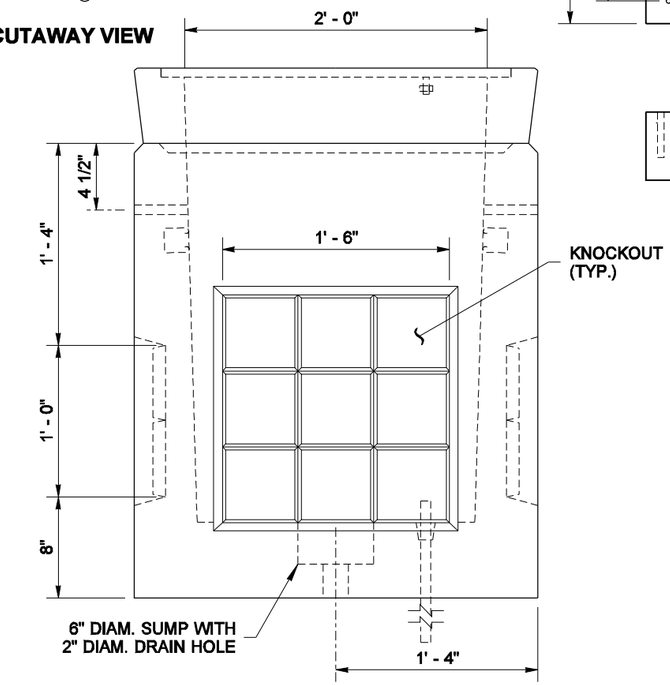

VIEW (B)

NOTES

1. The Heavy Duty Lid shall be used when a Pull Box is placed in the paved shoulder. Use a 9" thick lid for new pull box installation, otherwise see Contract Plans for overlay depth to match the lid thickness.
2. The diamond pattern shall be 3/32" minimum thick.
3. A 1/4-20NC × 3/4" S.S. ground stud with S.S. nut and flat washer shall be attached to the lid and coated with anti-seize compound.
4. Connect a bonding jumper to steel conduit bushings for GRS conduit; connect to equipment grounding conductor and also to the ground rod for PVC conduit. The Bonding Jumper shall be #8 min. × 4' of tinned braided copper.
5. The System Identification letters shall be 1/8" line thickness formed by engraving, casting, stamping, or with a weld bead. See SYSTEM IDENTIFICATION DETAIL, Standard Plan J-11a.
6. Concrete shall be Class 4000.
7. Plastic plugs shall be put into lid inserts after fabrication and after lid installation.

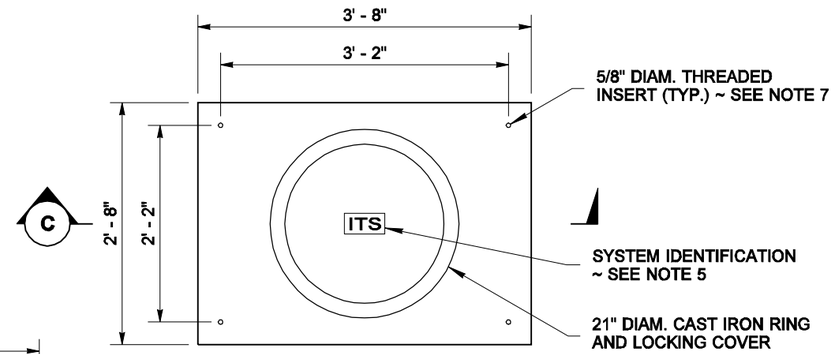

HEAVY DUTY LID
SEE NOTE 1

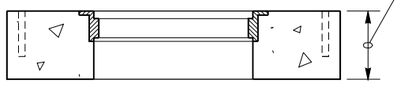

SECTION (C)

R. SCOTT ZELLER
STATE OF WASHINGTON
28680
REGISTERED
PROFESSIONAL ENGINEER

EXPIRES MAY 5, 2007

NOTE: THIS PLAN IS NOT A LEGAL ENGINEERING DOCUMENT BUT AN ELECTRONIC DUPLICATE. THE ORIGINAL, SIGNED BY THE ENGINEER AND APPROVED FOR PUBLICATION, IS KEPT ON FILE AT THE WASHINGTON STATE DEPARTMENT OF TRANSPORTATION. A COPY MAY BE OBTAINED UPON REQUEST.

PULL BOX

STANDARD PLAN J-15a

SHEET 1 OF 2 SHEETS

APPROVED FOR PUBLICATION

Harold J. Peterfeso — STATE DESIGN ENGINEER — *10-04-05* — DATE

Washington State Department of Transportation

EFFECTIVE: APRIL 2, 2007 TO JANUARY 6, 2008

EFFECTIVE: APRIL 2, 2007 TO JANUARY 6, 2008

EFFECTIVE: APRIL 2, 2007 TO JANUARY 6, 2008

EFFECTIVE: APRIL 2, 2007 TO JANUARY 6, 2008

DRAWN BY: ELENA BRUNSTEIN

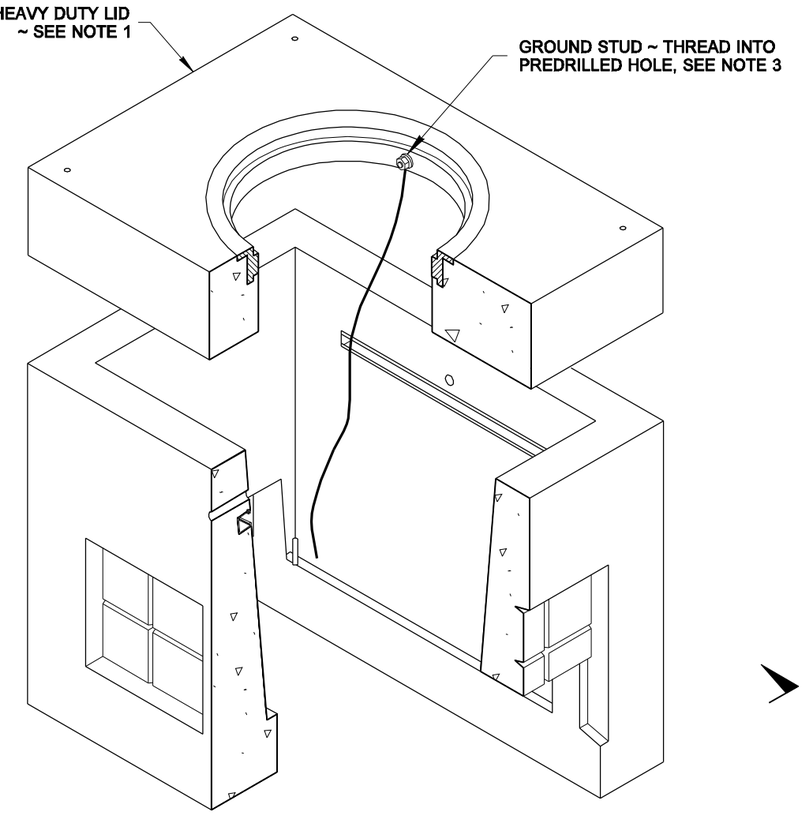

ISOMETRIC CUTAWAY VIEW

END VIEW (D)

SPLIT PULL BOX

(SHOWN WITH HEAVY DUTY LID)

SEE **PULL BOX**, SHEET 1, FOR DIMENSIONS NOT SHOWN

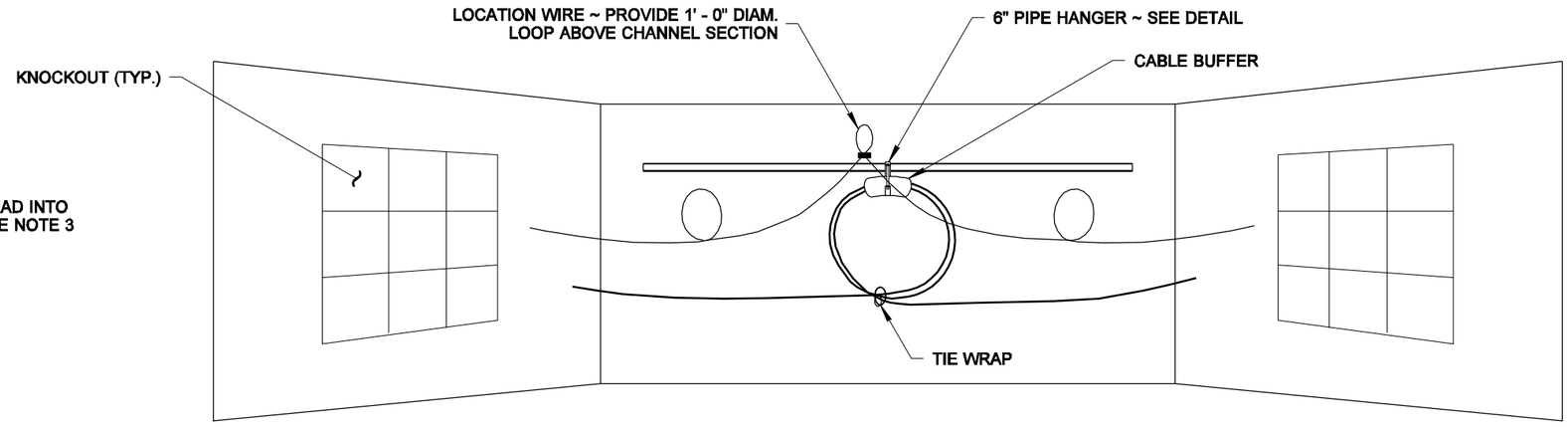

INTERNAL PERSPECTIVE VIEW

CABLE RACKING SCHEME

COIL THE CABLE BY USING A "FIGURE 8" FOLDED IN THE MIDDLE TO MAKE A LOOP

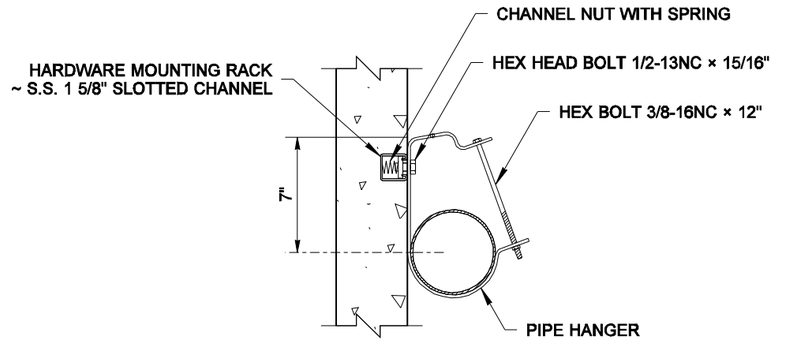

SIDE VIEW

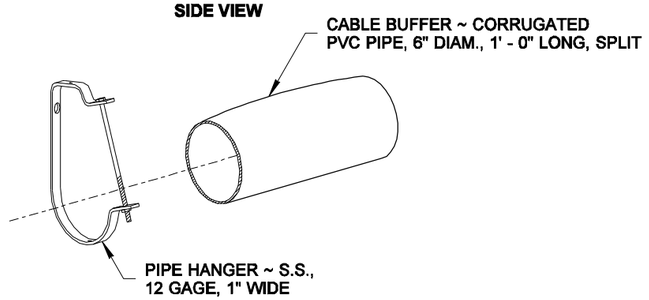

ISOMETRIC VIEW

6" PIPE HANGER DETAIL

FABRICATE IF NOT AVAILABLE COMMERCIALLY

R. SCOTT ZELLER
STATE OF WASHINGTON
28680
REGISTERED
PROFESSIONAL ENGINEER

EXPIRES MAY 5, 2007

NOTE: THIS PLAN IS NOT A LEGAL ENGINEERING DOCUMENT BUT AN ELECTRONIC DUPLICATE. THE ORIGINAL, SIGNED BY THE ENGINEER, AND APPROVED FOR PUBLICATION, IS KEPT ON FILE AT THE WASHINGTON STATE DEPARTMENT OF TRANSPORTATION. A COPY MAY BE OBTAINED UPON REQUEST.

PULL BOX

STANDARD PLAN J-15a

SHEET 2 OF 2 SHEETS

APPROVED FOR PUBLICATION

Harold J. Peterfeso — STATE DESIGN ENGINEER

10-04-05 — DATE

Washington State Department of Transportation

EFFECTIVE: APRIL 2, 2007 TO JANUARY 6, 2008

EFFECTIVE: APRIL 2, 2007 TO JANUARY 6, 2008

EFFECTIVE: APRIL 2, 2007 TO JANUARY 6, 2008

EFFECTIVE: APRIL 2, 2007 TO JANUARY 6, 2008

DRAWN BY: ELENA BRUNSTEIN

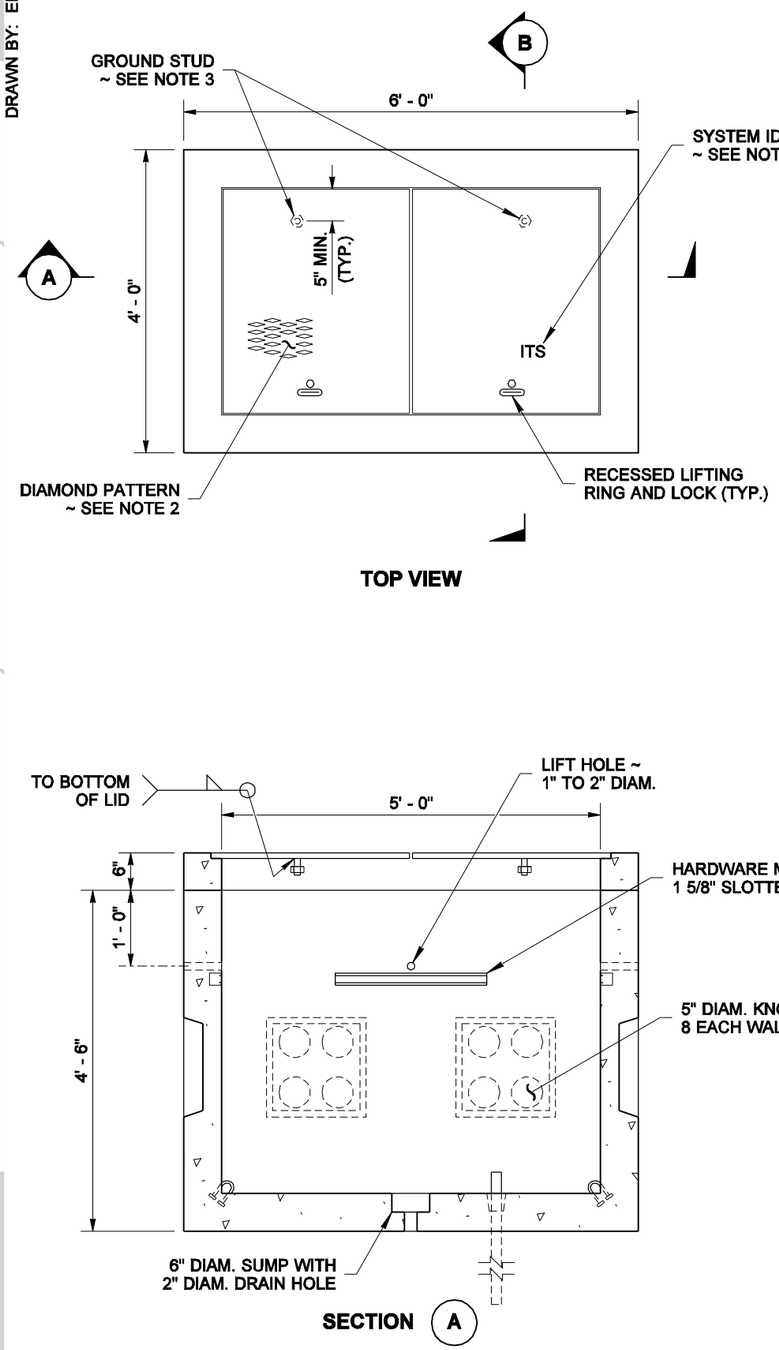

TOP VIEW

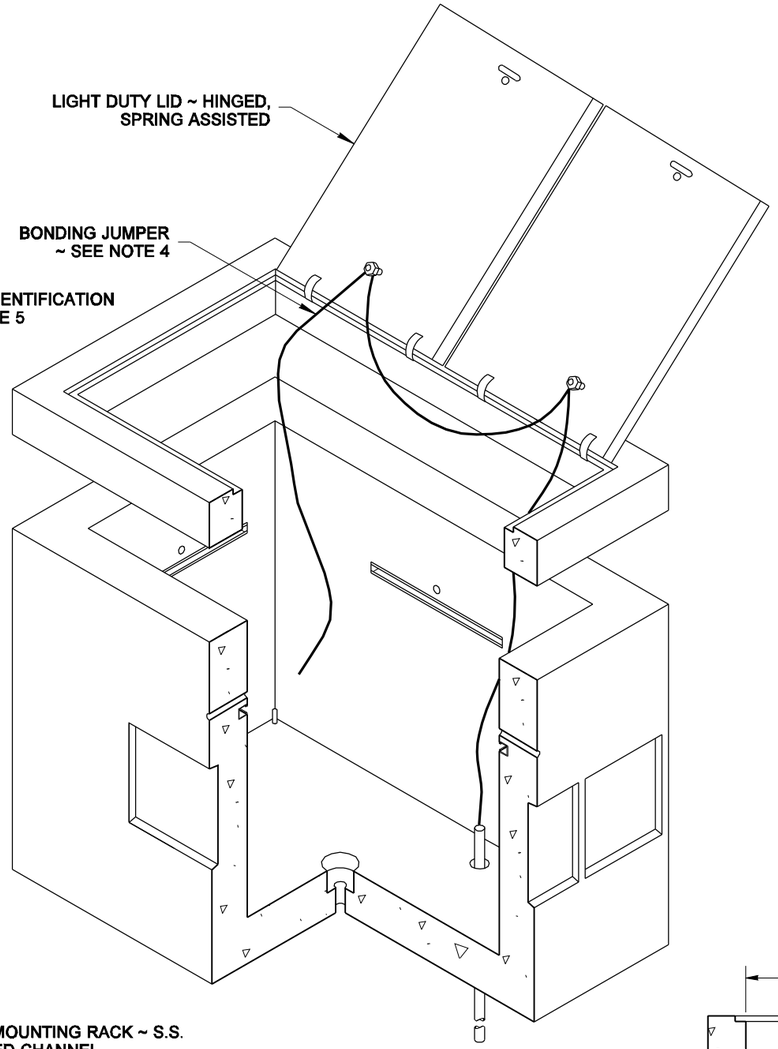

ISOMETRIC CUTAWAY VIEW

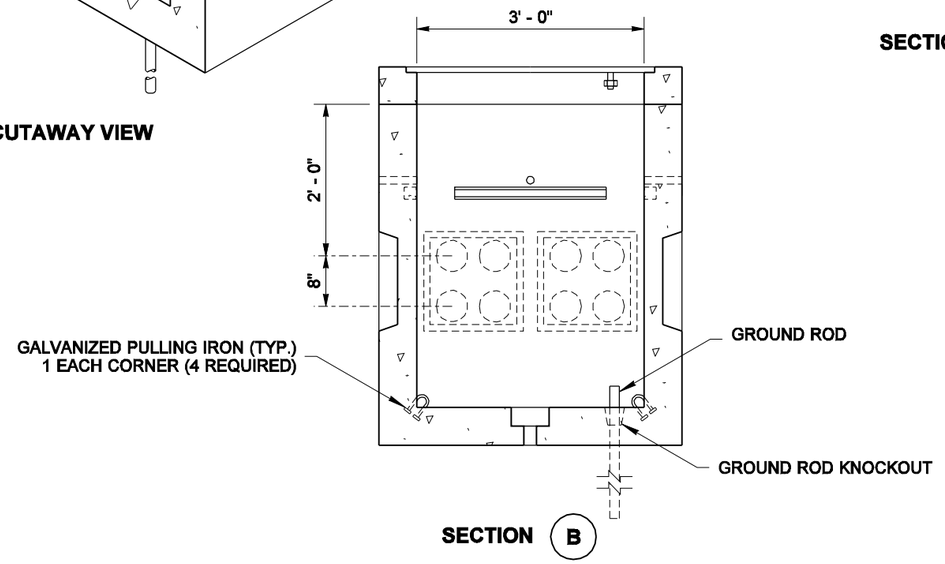

CABLE VAULT
(SHOWN WITH LIGHT DUTY LID)

NOTES

1. The Heavy Duty Lid shall be used when a Cable Vault is placed in the paved shoulder. Use a 9" thick lid for the new cable vault installation, otherwise see Contract Plans for overlay depth to match the lid thickness.
2. The diamond pattern shall be 3/32" minimum thick.
3. A 1/4-20NC × 3/4" S.S. ground stud with S.S. nut and flat washer shall be attached to the lid and coated with anti-seize compound.
4. Connect a bonding jumper to steel conduit bushings for GRS conduit; connect to equipment grounding conductor and also to the ground rod for PVC conduit. The Bonding Jumper shall be #8 min. × 4' of tinned braided copper.
5. The System Identification letters shall be 1/8" line thickness formed by engraving, casting, stamping, or with a weld bead. See SYSTEM IDENTIFICATION DETAIL, Standard Plan J-11a
6. Concrete shall be Class 4000.
7. Plastic plugs shall be put into lid inserts after fabrication and after lid installation.

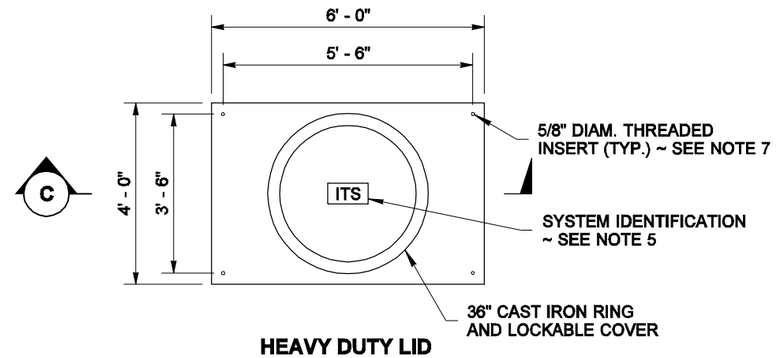

HEAVY DUTY LID
SEE NOTE 1

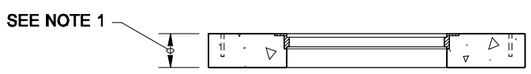

SECTION C

R. SCOTT ZELLER
STATE OF WASHINGTON
28680
REGISTERED
PROFESSIONAL ENGINEER
EXPIRES MAY 5, 2007

NOTE: THIS PLAN IS NOT A LEGAL ENGINEERING DOCUMENT BUT AN ELECTRONIC DUPLICATE. THE ORIGINAL, SIGNED BY THE ENGINEER AND APPROVED FOR PUBLICATION, IS KEPT ON FILE AT THE WASHINGTON STATE DEPARTMENT OF TRANSPORTATION. A COPY MAY BE OBTAINED UPON REQUEST.

CABLE VAULT

STANDARD PLAN J-15b

SHEET 1 OF 2 SHEETS

APPROVED FOR PUBLICATION

Harold J. Peterfeso — STATE DESIGN ENGINEER

10-04-05 — DATE

Washington State Department of Transportation

EFFECTIVE: APRIL 2, 2007 TO JANUARY 6, 2008

EFFECTIVE: APRIL 2, 2007 TO JANUARY 6, 2008

EFFECTIVE: APRIL 2, 2007 TO JANUARY 6, 2008

EFFECTIVE: APRIL 2, 2007 TO JANUARY 6, 2008

DRAWN BY: ELENA BRUNSTEIN

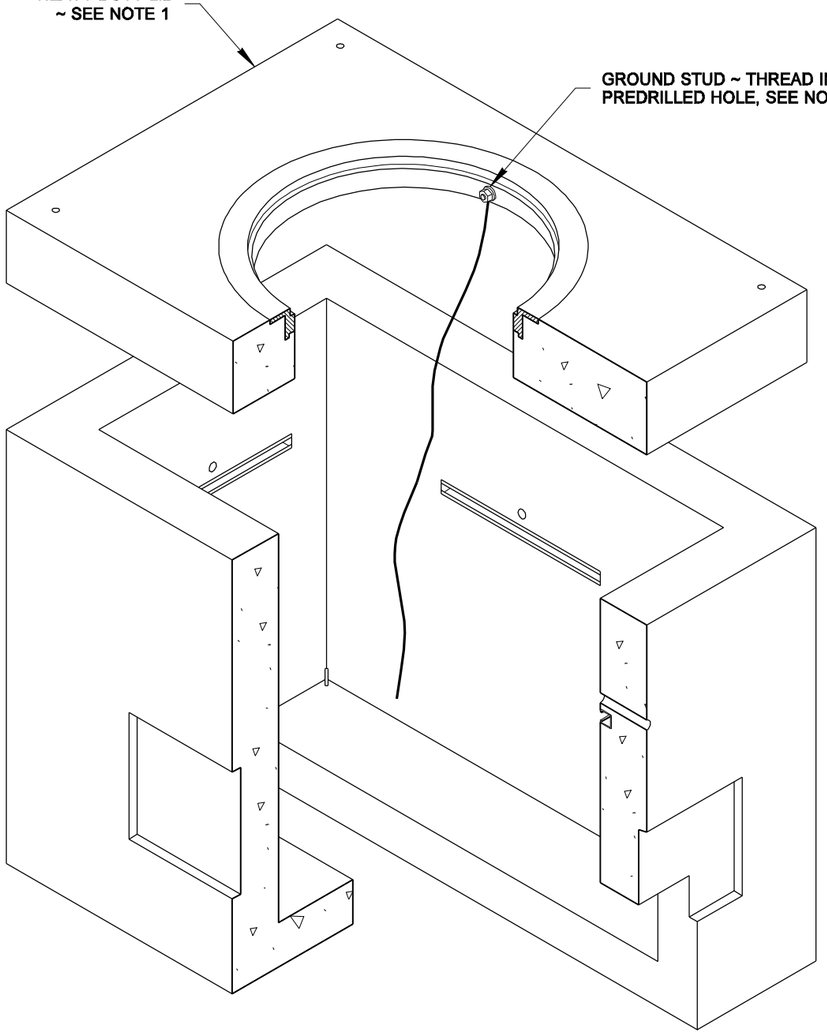

ISOMETRIC CUTAWAY VIEW

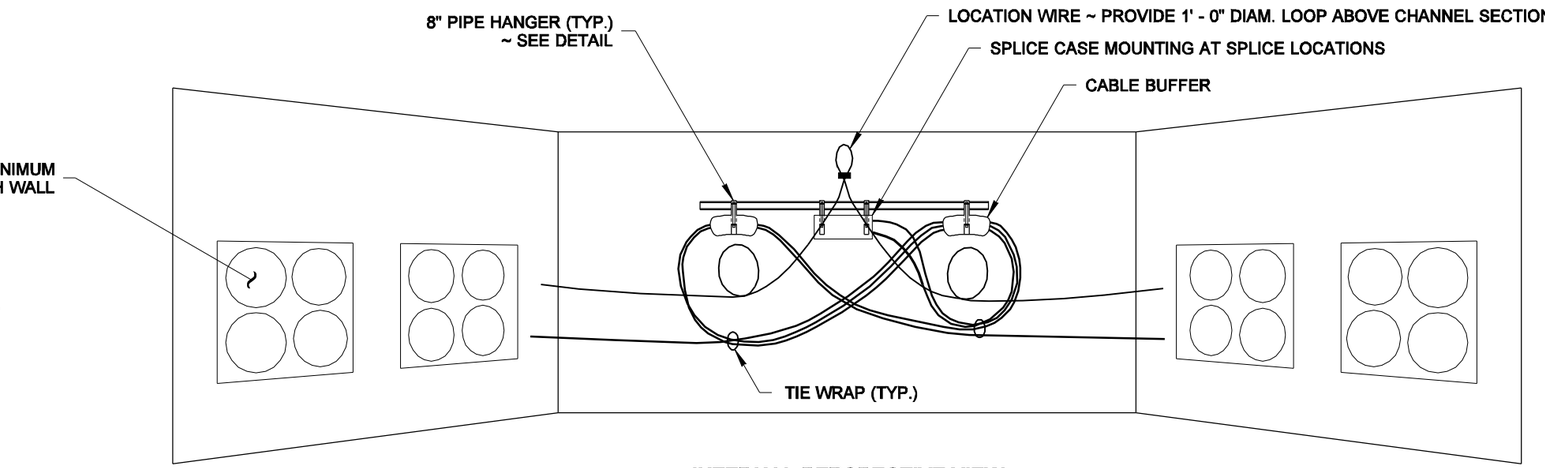

INTERNAL PERSPECTIVE VIEW

CABLE RACKING SCHEME

COIL THE CABLE BY USING A "FIGURE 8"

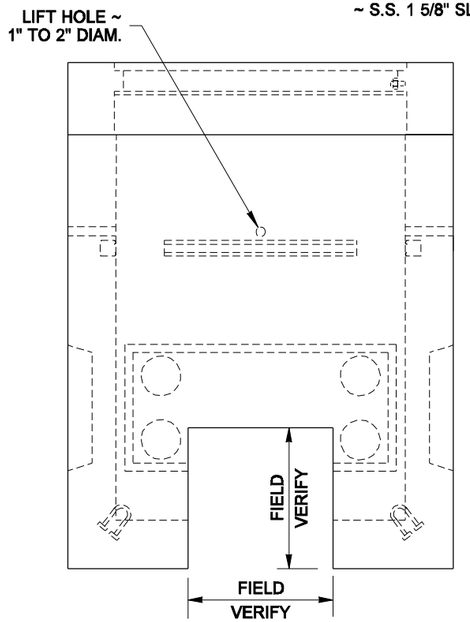

END VIEW (D)

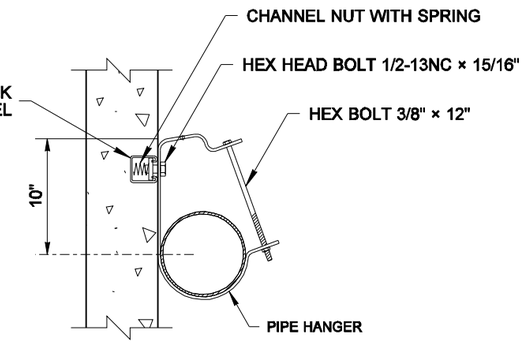

SIDE VIEW

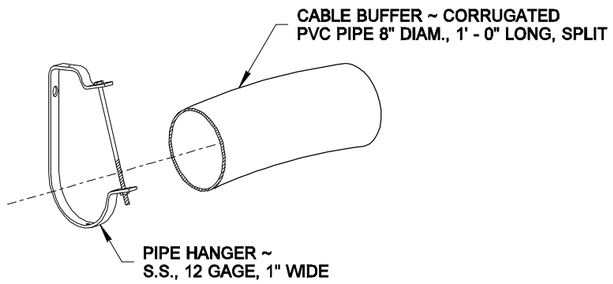

ISOMETRIC VIEW

8" PIPE HANGER DETAIL
FABRICATE IF NOT AVAILABLE COMMERCIALLY

R. SCOTT ZELLER
STATE OF WASHINGTON
28680
REGISTERED
PROFESSIONAL ENGINEER

EXPIRES MAY 5, 2007

NOTE: THIS PLAN IS NOT A LEGAL ENGINEERING DOCUMENT BUT AN ELECTRONIC DUPLICATE. THE ORIGINAL, SIGNED BY THE ENGINEER, AND APPROVED FOR PUBLICATION, IS KEPT ON FILE AT THE WASHINGTON STATE DEPARTMENT OF TRANSPORTATION. A COPY MAY BE OBTAINED UPON REQUEST.

CABLE VAULT

STANDARD PLAN J-15b

SHEET 2 OF 2 SHEETS

APPROVED FOR PUBLICATION

Harold J. Peterfeso — STATE DESIGN ENGINEER — *10-04-05* — DATE

Washington State Department of Transportation

SPLIT CABLE VAULT

(SHOWN WITH HEAVY DUTY LID)
SEE **CABLE VAULT**, SHEET 1, FOR DIMENSIONS NOT SHOWN

EFFECTIVE: APRIL 2, 2007 TO JANUARY 6, 2008

EFFECTIVE: APRIL 2, 2007 TO JANUARY 6, 2008

EFFECTIVE: APRIL 2, 2007 TO JANUARY 6, 2008

EFFECTIVE: APRIL 2, 2007 TO JANUARY 6, 2008

EFFECTIVE: APRIL 2, 2007 TO JANUARY 6, 2008

EFFECTIVE: APRIL 2, 2007 TO JANUARY 6, 2008

DRAWN BY: ELENA BRUNSTEIN

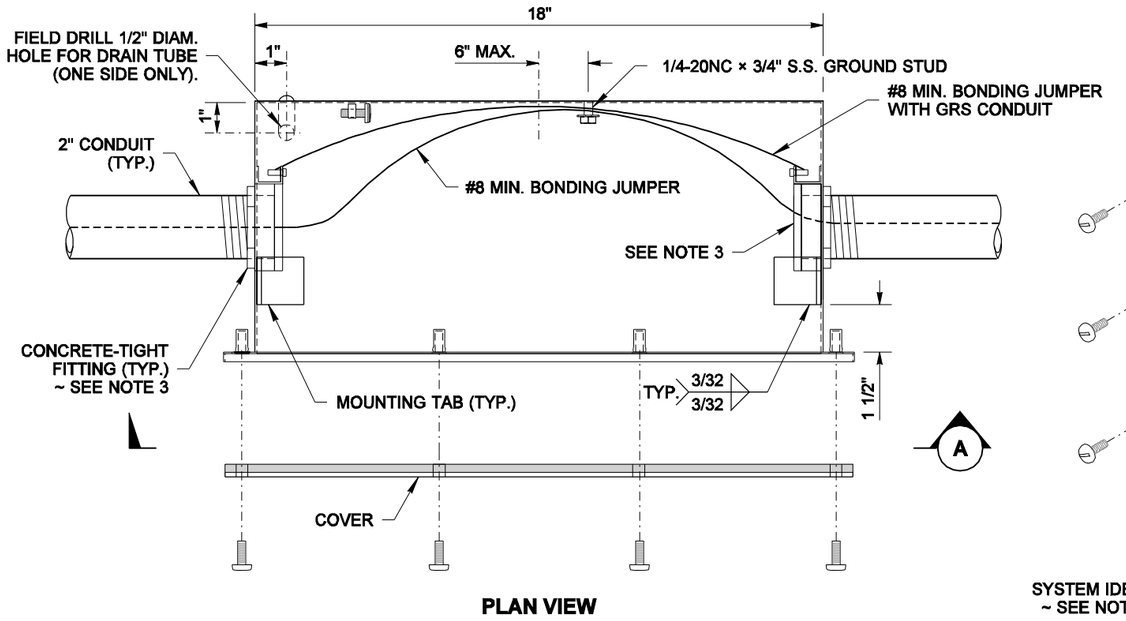

PLAN VIEW

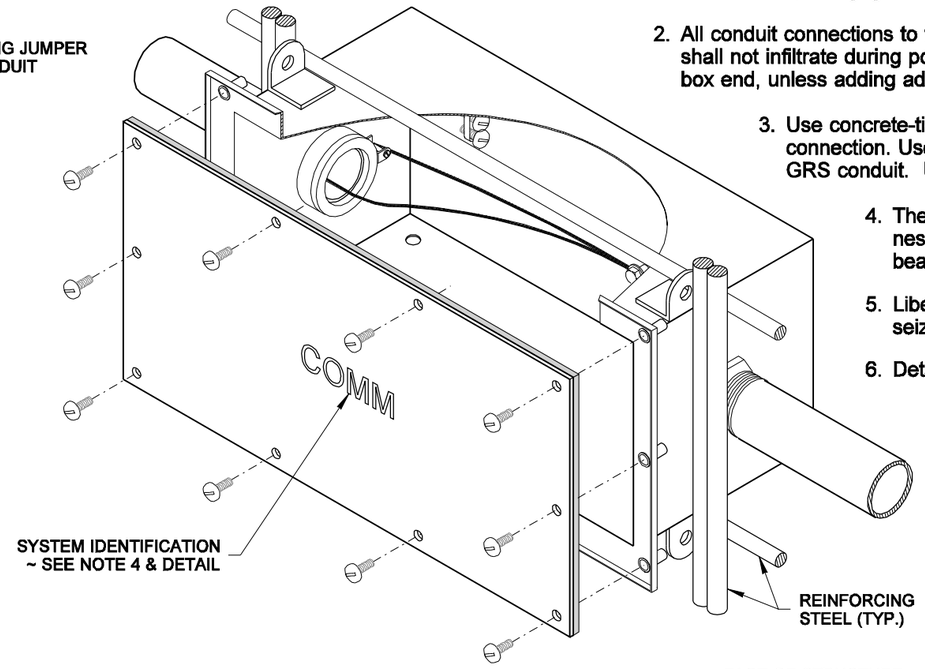

ISOMETRIC VIEW
SHOWN MOUNTED IN REINFORCING STEEL

NOTES

1. The Junction Box shall be of type 304 stainless steel, welded seam construction: #12 gage backbox with #2B finish, #12 gage cover with #4 finish, and #12 gage mounting tabs.
2. All conduit connections to the Junction Box shall be concrete-tight (wet concrete shall not infiltrate during pour). Field drill or punch the holes in the center of the box end, unless adding additional conduit. (See SECTION "B")
3. Use concrete-tight fittings on the outside of the junction box conduit connection. Use an insulated, grounded end bushing on the inside for GRS conduit. Use an end bell bushing on the inside for PVC conduit.
4. The System Identification letters shall be 1/16" line thickness formed by engraving, stamping, or with a S.S. weld bead. See Detail.
5. Liberally coat the threads of the cover fasteners with anti-seize compound during construction & before final closure.
6. Details shown for box installation in stationary forms.

SYSTEM IDENTIFICATION DETAIL

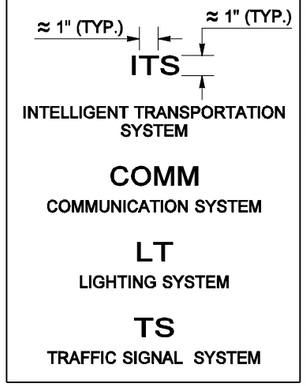

INTELLIGENT TRANSPORTATION SYSTEM

COMM
COMMUNICATION SYSTEM

LT
LIGHTING SYSTEM

TS
TRAFFIC SIGNAL SYSTEM

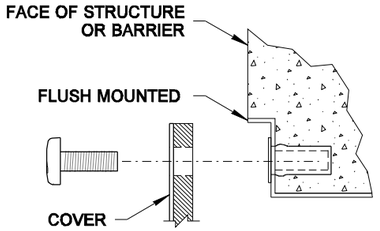

MOUNTING DETAIL
SECTION VIEW

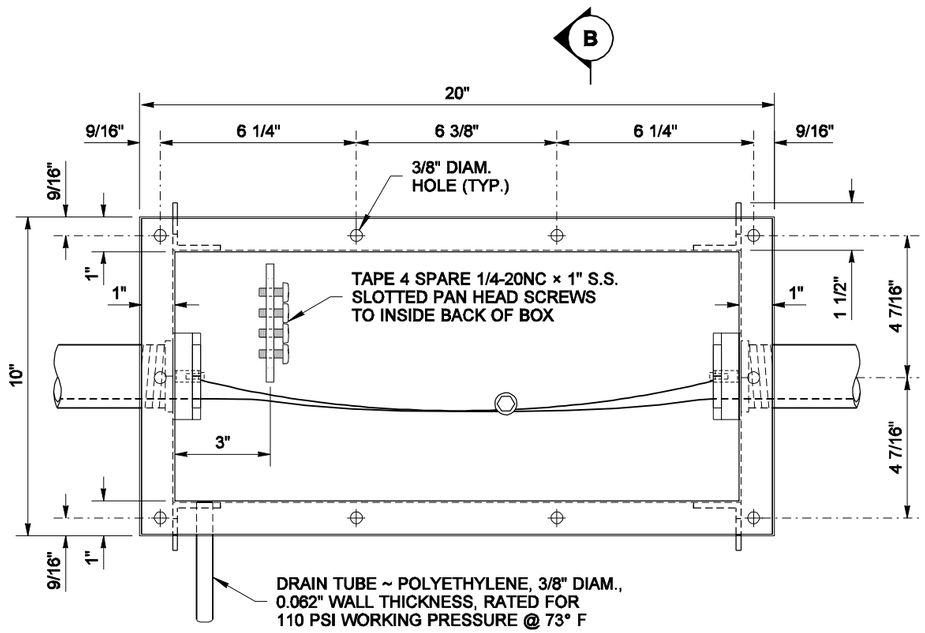

VIEW (A)

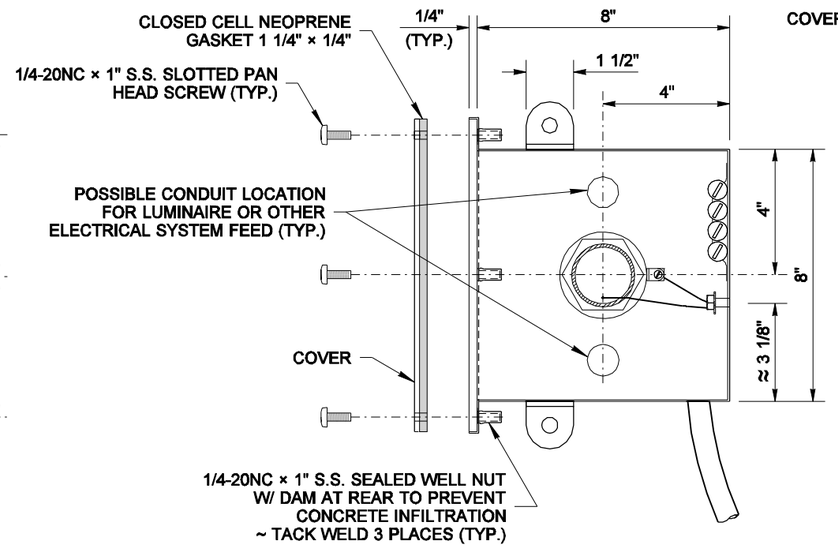

SECTION (B)

R. SCOTT ZELLER
STATE OF WASHINGTON
28680
REGISTERED
PROFESSIONAL ENGINEER

EXPIRES MAY 5, 2005

NOTE: THIS PLAN IS NOT A LEGAL ENGINEERING DOCUMENT BUT AN ELECTRONIC DUPLICATE. THE ORIGINAL, SIGNED BY THE ENGINEER AND APPROVED FOR PUBLICATION, IS KEPT ON FILE AT THE WASHINGTON STATE DEPARTMENT OF TRANSPORTATION. A COPY MAY BE OBTAINED UPON REQUEST.

JUNCTION BOX TRAFFIC BARRIER MOUNTED

STANDARD PLAN J-16a

SHEET 1 OF 1 SHEET

APPROVED FOR PUBLICATION

Harold J. Peterfeso — STATE DESIGN ENGINEER — *03-04-05* — DATE

Washington State Department of Transportation

EFFECTIVE: APRIL 2, 2007 TO JANUARY 6, 2008

EFFECTIVE: APRIL 2, 2007 TO JANUARY 6, 2008

EFFECTIVE: APRIL 2, 2007 TO JANUARY 6, 2008

DRAWN BY: ELENA BRUNSTEIN

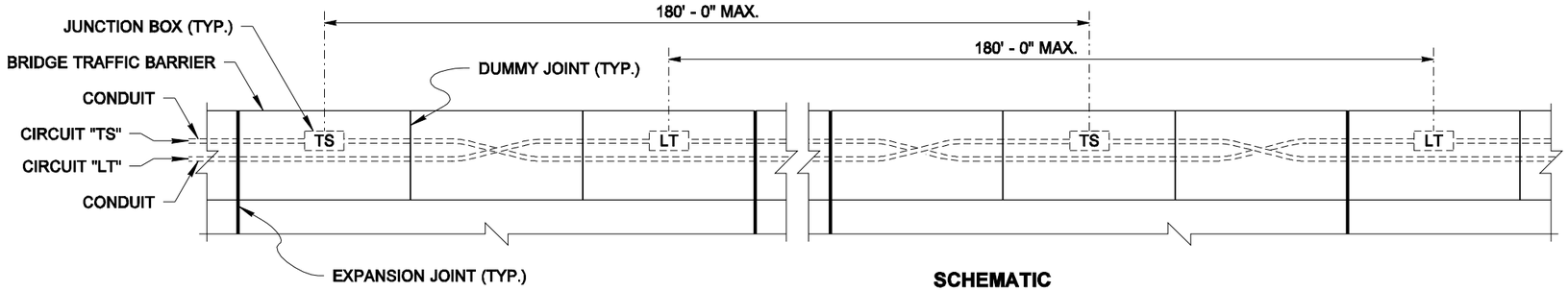

SCHEMATIC
SHOWN FOR DUAL CONDUIT INSTALLATION
~ CIRCUIT TYPES MAY VARY

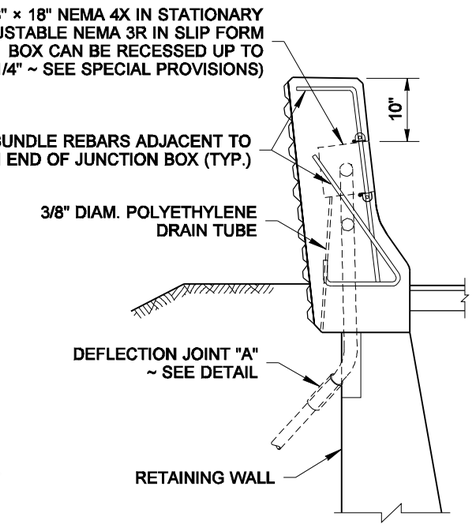

VIEW (A)

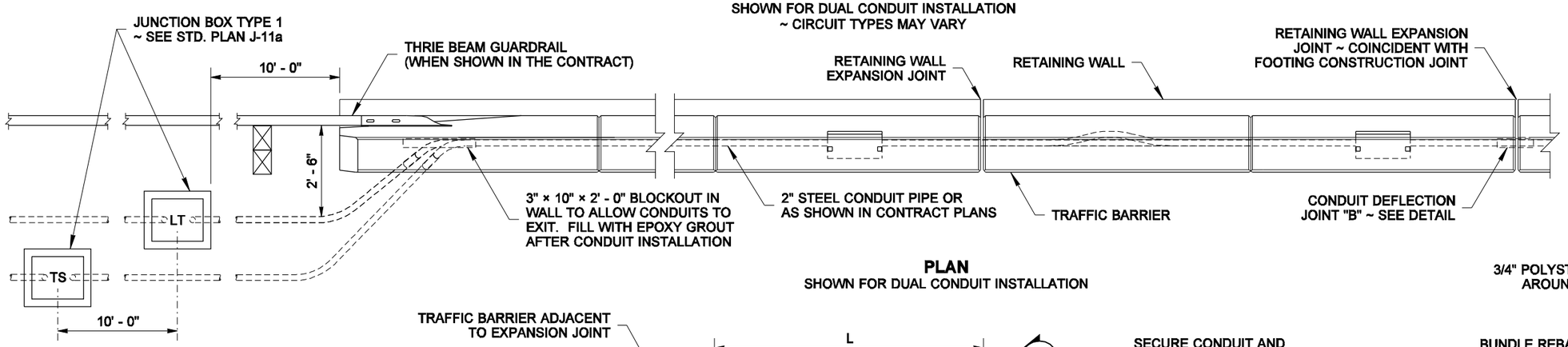

PLAN
SHOWN FOR DUAL CONDUIT INSTALLATION

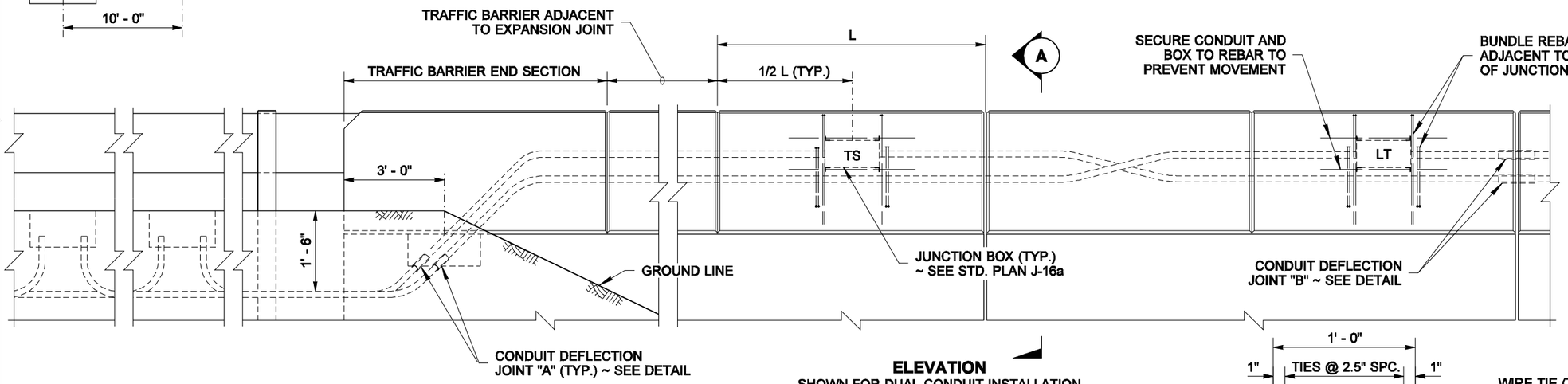

ELEVATION
SHOWN FOR DUAL CONDUIT INSTALLATION

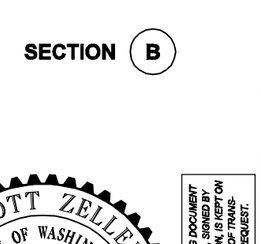

SECTION (B)

KEY NOTES

1. Conduit fitting with internal bonding jumper ~ Type DX for deflection of 30° and 3/4" movement.
2. Where steel conduit exits from a structure wrap conduit pipe for 1' - 0" on each side from the exiting point. Pipe-wrap tape shall be 2" wide, 20 mil thick, and installed with a minimum of 1" overlap.
3. 1' - 0" long, 3/4" thick expanded polystyrene foam sleeve around conduit and conduit fitting. After placing wire ties, duct tape seams and ends to seal and prevent concrete from bonding with fitting and conduit.
4. Where conduit in a structure is routed across a joint, wrap steel conduit pipe for 1' - 0" on each side of joint. Pipe-wrap tape shall be 2" wide, 20 mil thick, and installed with a minimum of 1" overlap.

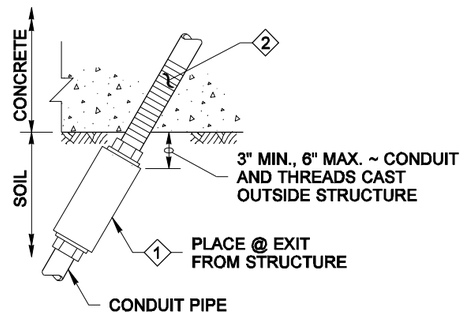

CONDUIT DEFLECTION JOINT "A" DETAIL

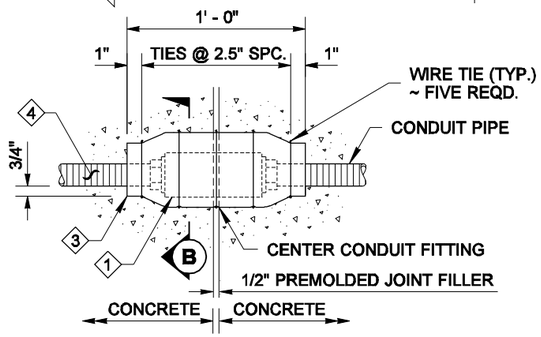

CONDUIT DEFLECTION JOINT "B" DETAIL
CONDUIT PIPES PLACED IN RETAINING WALL TRAFFIC BARRIERS SHALL BE FITTED WITH DEFLECTION FITTINGS SPACED AT 120' MAXIMUM. THE DEFLECTION FITTINGS SHALL BE PLACED AT THE TRAFFIC BARRIER OPEN JOINTS THAT COINCIDE WITH THE RETAINING WALL STEM EXPANSION JOINTS NEAREST TO THE TRANSVERSE CONSTRUCTION JOINTS IN THE WALL FOOTING

R. SCOTT ZELLER
STATE OF WASHINGTON
28680
REGISTERED
PROFESSIONAL ENGINEER

EXPIRES MAY 5, 2007

NOTE: THIS PLAN IS NOT A LEGAL ENGINEERING DOCUMENT BUT AN ELECTRONIC DUPLICATE. THE ORIGINAL, SIGNED BY THE ENGINEER AND APPROVED FOR PUBLICATION, IS KEPT ON FILE AT THE WASHINGTON STATE DEPARTMENT OF TRANSPORTATION. A COPY MAY BE OBTAINED UPON REQUEST.

CONDUIT INSTALLATION IN RETAINING WALL TRAFFIC BARRIER
STANDARD PLAN J-16b

SHEET 1 OF 1 SHEETS

APPROVED FOR PUBLICATION

Harold J. Peterfeso — *09-02-05*

STATE DESIGN ENGINEER — DATE

Washington State Department of Transportation

EFFECTIVE: APRIL 2, 2007 TO JANUARY 6, 2008

EFFECTIVE: APRIL 2, 2007 TO JANUARY 6, 2008

DRAWN BY: MONIQUE GLICK

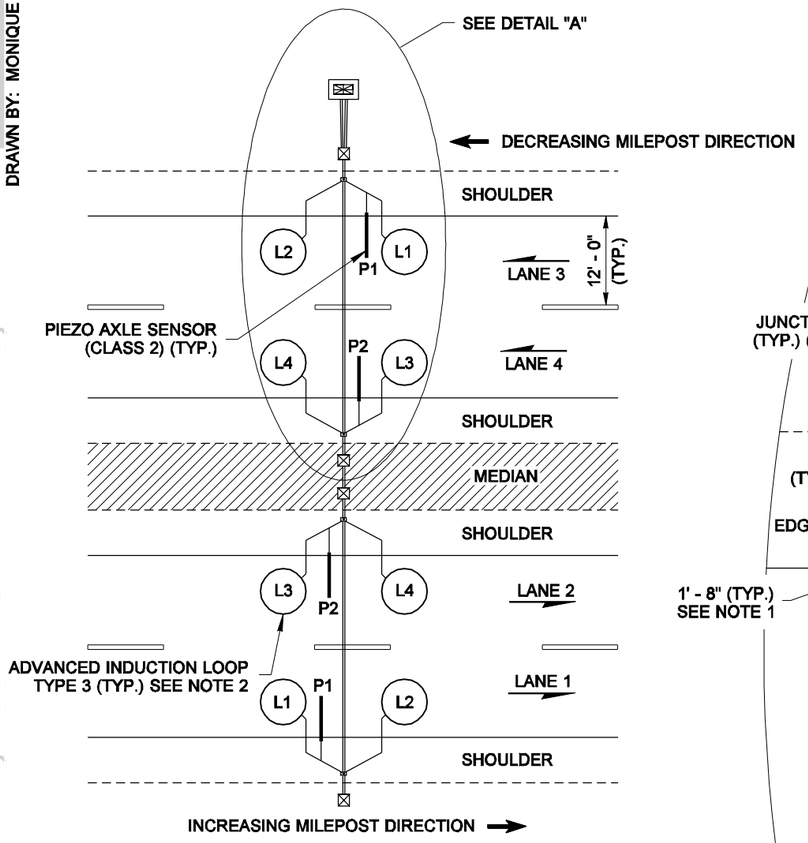

PLAN VIEW

INDUCTION LOOP / PIEZO AXLE SENSOR NUMBER IDENTIFICATION

Lane 1 - (drive lane) ~ Loop L1, Piezo P1, Loop L2

Lane 2 - (pass lane) ~ Loop L3, Piezo P2, Loop L4

Lane 3 - (drive lane) ~ Loop L1, Piezo P1, Loop L2

Lane 4 - (pass lane) ~ Loop L3, Piezo P2, Loop L4

TYPICAL 4 LANE FREEWAY WITH MEDIAN

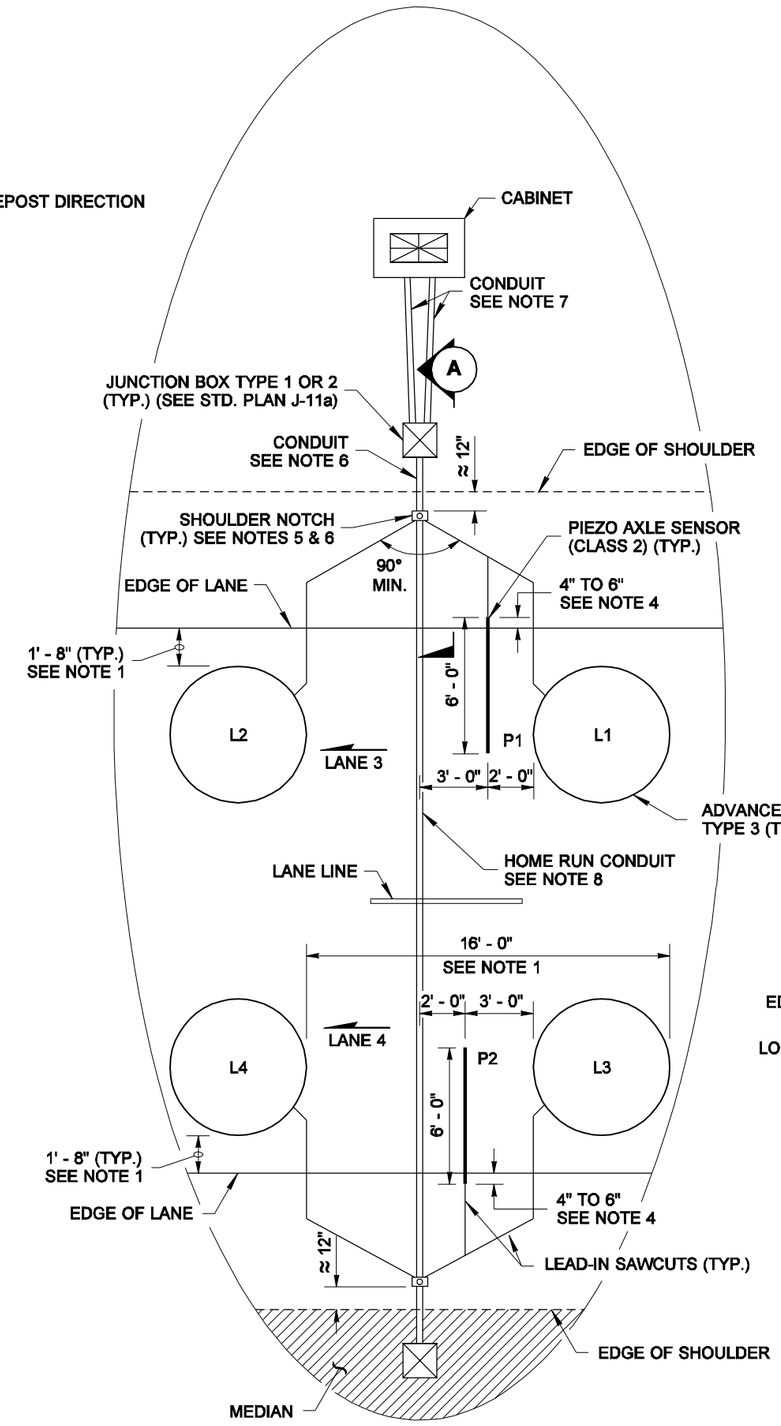

DETAIL "A"

NOTES

1. The Traffic Data Collection Loop spacing shall be 16' - 0" from leading edge to leading edge. The loops shall be centered inside lanes without an adjacent shoulder; the loops in lanes adjacent to shoulders, including the median shoulder, shall be located 1' - 8" from the edge of lane, see Detail "A".
2. Type 2 Advanced Induction Loops may also be used, see Standard Plan J-8b.
3. The loops and axle sensors shall be cut in the final lift of asphalt.
4. For concrete pavement lanes with asphalt shoulders, install all of the Piezo sensor and splice in the concrete lane. Also for concrete pavement lanes install the loops 4" to 6" away from the expansion joints.
5. The shoulder notch length along the roadway shall be 4" or the conduit size plus 2", whichever is larger. The shoulder notch width perpendicular to the roadway shall be the conduit size plus 1/4".
6. After all the wire leads are installed, seal the end of the conduit with Conduit Sealant. See the Special Provisions in the contract for the material used to fill the notch in the shoulder, or use an asphalt cold-patch.
7. Use Schedule 40 PVC conduit from the junction box to the cabinet. When there are four or more total lanes, use one conduit for each direction of travel. For conduit installation, see Standard Specification 8-20.
8. Use Schedule 80 PVC, HDPE, or Steel Conduit under the roadway. For conduit installation, see Standard Specification 8-20.
9. An inspector from the Traffic Data Office (TDO) shall be on site during all phases of the Traffic Recorder installation. The Contractor shall alert the Engineer 10 days prior to the beginning of any installation activity.
10. See Standard Plan J-20 for Piezo Axle Sensor General Installation Instructions.

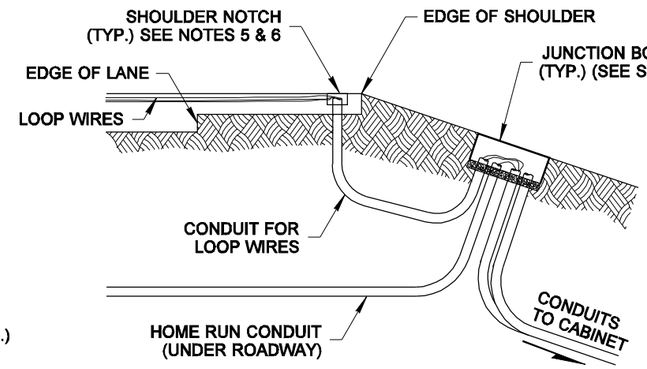

SECTION (A)

ROGER E. HORTON
STATE OF WASHINGTON
19894
REGISTERED
PROFESSIONAL ENGINEER

EXPIRES JANUARY 26, 2007

NOTE: THIS PLAN IS NOT A LEGAL ENGINEERING DOCUMENT BUT AN ELECTRONIC DUPLICATE. THE ORIGINAL, SIGNED BY THE ENGINEER AND APPROVED FOR PUBLICATION, IS KEPT ON FILE AT THE WASHINGTON STATE DEPARTMENT OF TRANSPORTATION. A COPY MAY BE OBTAINED UPON REQUEST.

PERMANENT TRAFFIC RECORDER SITE INSTALLATIONS
STANDARD PLAN J-18

SHEET 1 OF 2 SHEETS

APPROVED FOR PUBLICATION

Harold J. Peterfeso — STATE DESIGN ENGINEER

09-02-05 — DATE

Washington State Department of Transportation

EFFECTIVE: APRIL 2, 2007 TO JANUARY 6, 2008

EFFECTIVE: APRIL 2, 2007 TO JANUARY 6, 2008

DRAWN BY: MONIQUE GLICK

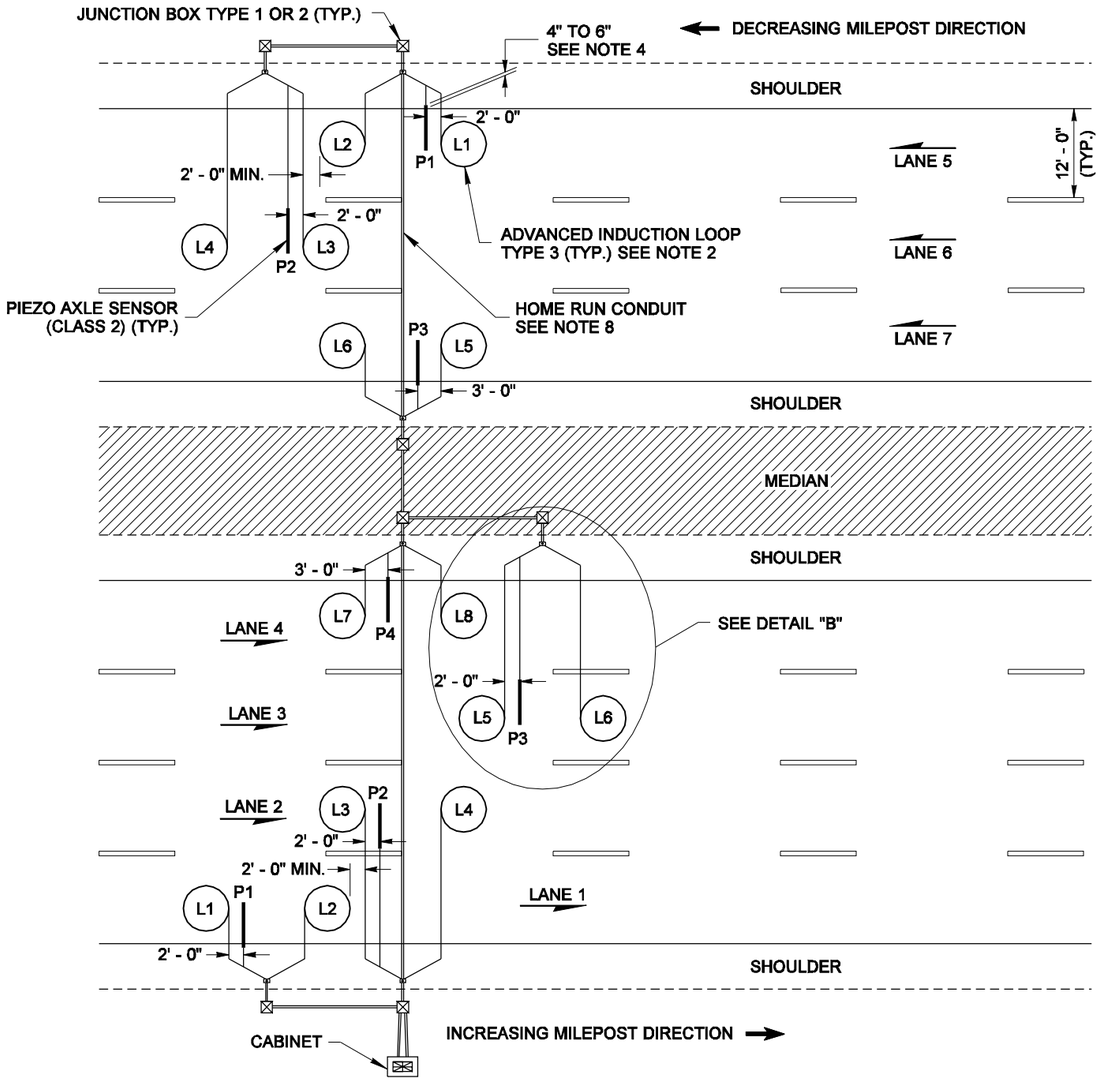

PLAN VIEW

INDUCTION LOOP / PIEZO AXLE SENSOR NUMBER IDENTIFICATION

Lane 1 - (drive lane) ~ Loop L1, Piezo P1, Loop L2

Lane 2 - (drive lane) ~ Loop L3, Piezo P2, Loop L4

Lane 3 - (drive lane) ~ Loop L5, Piezo P3, Loop L6

Lane 4 - (pass lane) ~ Loop L7, Piezo P4, Loop L8

Lane 5 - (drive lane) ~ Loop L1, Piezo P1, Loop L2

Lane 6 - (drive lane) ~ Loop L3, Piezo P2, Loop L4

Lane 7 - (pass lane) ~ Loop L5, Piezo P3, Loop L6

TYPICAL 7 LANE FREEWAY WITH MEDIAN

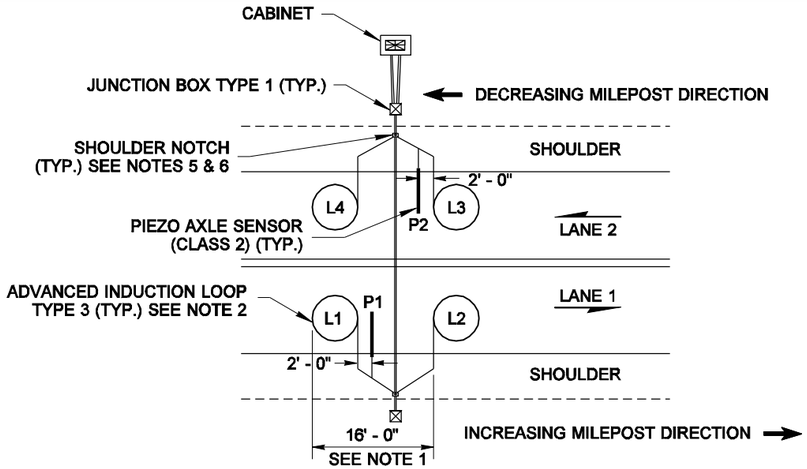

PLAN VIEW

INDUCTION LOOP / PIEZO AXLE SENSOR NUMBER IDENTIFICATION

Lane 1 - (drive lane) ~ Loop L1, Piezo P1, Loop L2

Lane 2 - (drive lane) ~ Loop L3, Piezo P2, Loop L4

TYPICAL 2 WAY ROADWAY

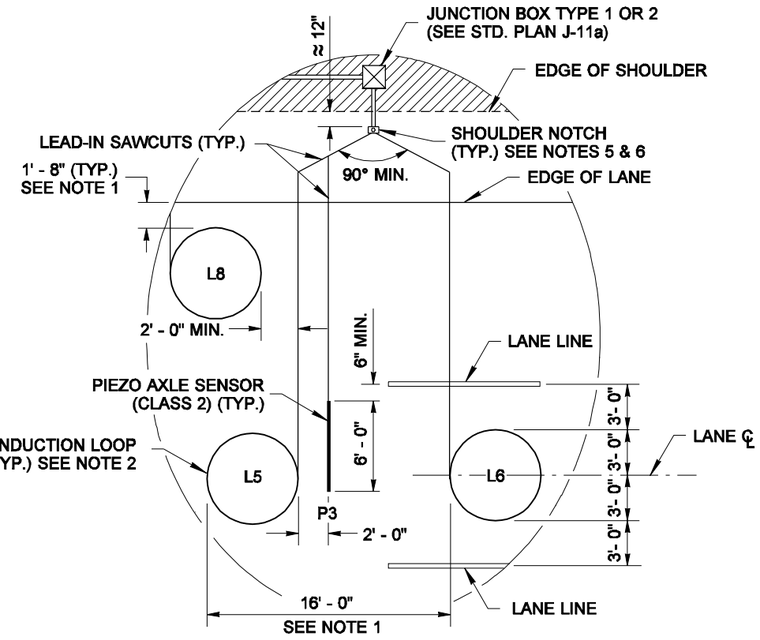

DETAIL "B"

ROGER E. HORTON
STATE OF WASHINGTON
19894
REGISTERED
PROFESSIONAL ENGINEER

EXPIRES JANUARY 26, 2007

NOTE: THIS PLAN IS NOT A LEGAL ENGINEERING DOCUMENT BUT AN ELECTRONIC DUPLICATE. THE ORIGINAL, SIGNED BY THE ENGINEER AND APPROVED FOR PUBLICATION, IS KEPT ON FILE AT THE WASHINGTON STATE DEPARTMENT OF TRANSPORTATION. A COPY MAY BE OBTAINED UPON REQUEST.

PERMANENT TRAFFIC RECORDER SITE INSTALLATIONS
STANDARD PLAN J-18

SHEET 2 OF 2 SHEETS

APPROVED FOR PUBLICATION

Harold J. Peterfeso — STATE DESIGN ENGINEER

09-02-05 — DATE

Washington State Department of Transportation

EFFECTIVE: APRIL 2, 2007 TO JANUARY 6, 2008

EFFECTIVE: APRIL 2, 2007 TO JANUARY 6, 2008

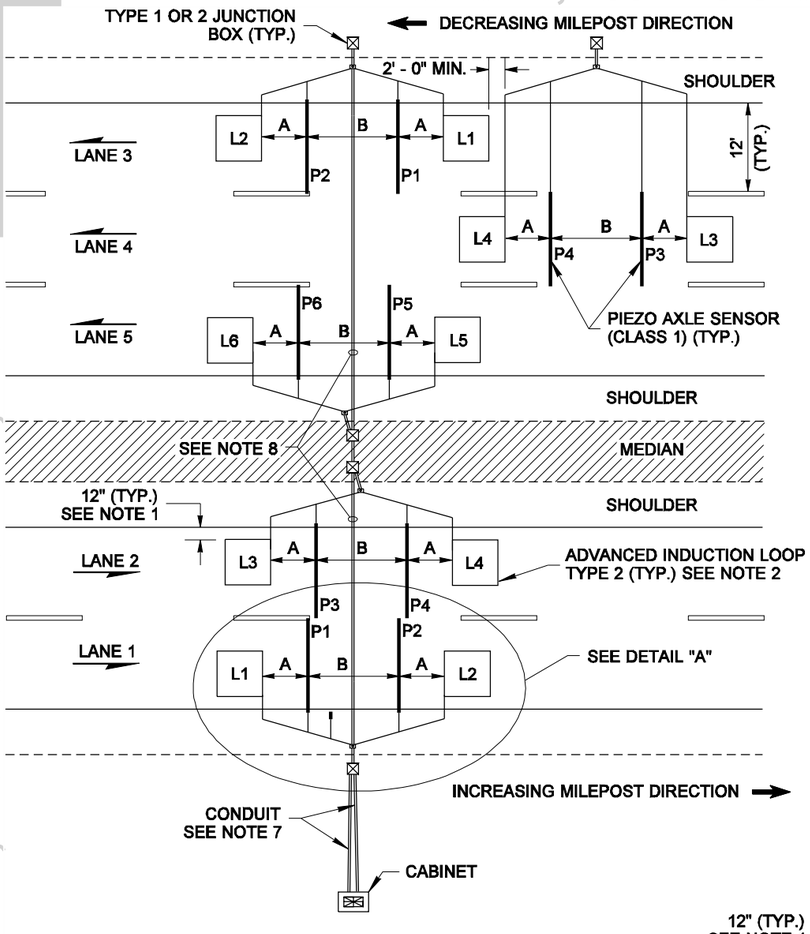

PLAN VIEW

INDUCTION LOOP / PIEZO AXLE SENSOR NUMBER IDENTIFICATION

Lane 1 - (drive lane) ~ Loop L1, Piezo P1, Piezo P2, Loop L2

Lane 2 - (pass lane) ~ Loop L3, Piezo P3, Piezo P4, Loop L4

Lane 3 - (drive lane) ~ Loop L1, Piezo P1, Piezo P2, Loop L2

Lane 4 - (drive lane) ~ Loop L3, Piezo P3, Piezo P4, Loop L4

Lane 5 - (pass lane) ~ Loop L5, Piezo P5, Piezo P6, Loop L6

TYPICAL 5 LANE FREEWAY WITH MEDIAN

INDUCTION LOOP TO PIEZO AXLE SPACING		
	A	B
RURAL	6'	12'
URBAN	2'	10'

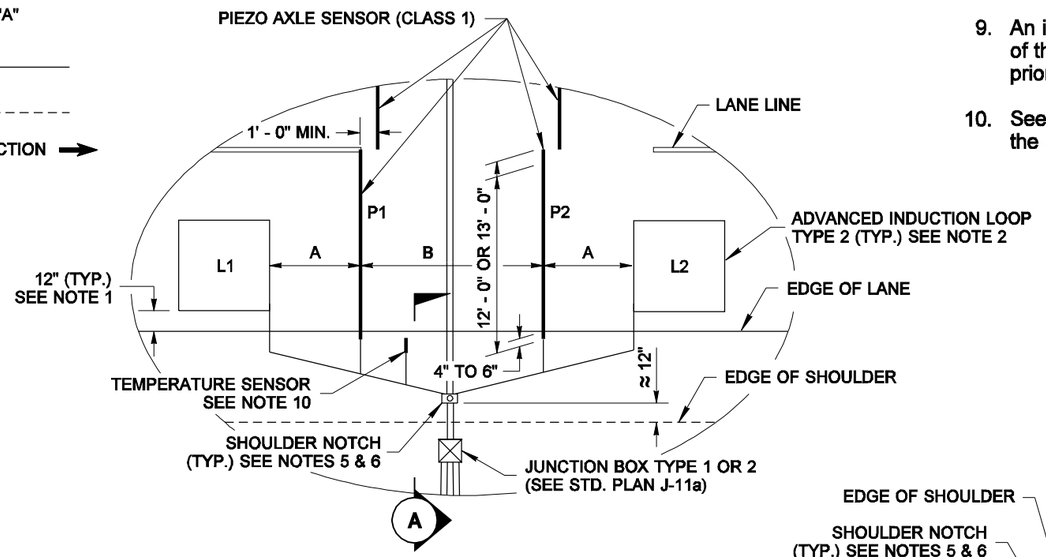

DETAIL "A"

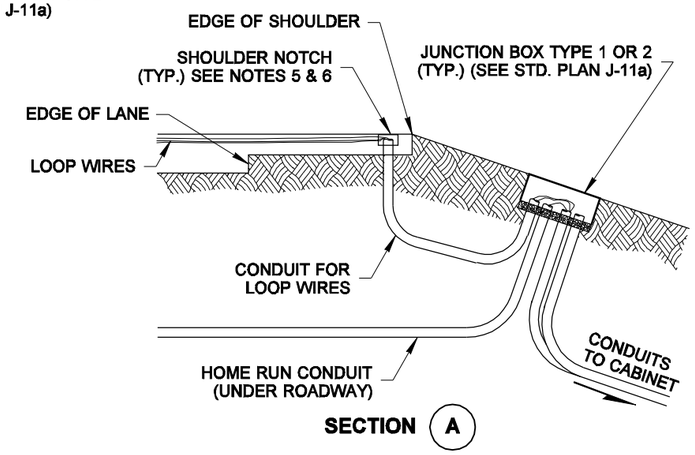

SECTION A

NOTES

1. The Traffic Data Collection Loops shall be centered inside lanes without an adjacent shoulder; the loops in lanes adjacent to shoulders, including the median shoulder, shall be located 12" from the edge of lane, see Detail "A".
2. Type 3 Advanced Induction Loops may also be used, see Standard Plan J-8b.
3. The loops and axle sensors shall be cut in the final lift of asphalt.
4. For concrete pavement lanes with asphalt shoulders, install all of the Piezo sensor and splice in the concrete lane. Also for concrete pavement lanes install the loops 4" to 6" away from the expansion joints.
5. The shoulder notch length along the roadway shall be 4" or the conduit size plus 2", whichever is larger. The shoulder notch width perpendicular to the roadway shall be the conduit size plus 1/4".
6. After all the wire leads are installed, seal the end of the conduit with Conduit Sealant. See the Special Provisions in the contract for the material used to fill the notch in the shoulder, or use an asphalt cold-patch.
7. Use Schedule 40 PVC conduit from the junction box to the cabinet. When there are four or more total lanes, use one conduit for each direction of travel. See Standard Specification 8-20 for conduit installation.
8. Use Schedule 80 PVC, HDPE, or steel conduit under the roadway. See Standard Specification 8-20 for conduit installation.
9. An inspector from the Traffic Data Office (TDO) shall be on site during all phases of the Traffic Recorder installation. The Contractor shall alert the Engineer 10 days prior to the beginning of any installation activity.
10. See Standard Plan J-20 for Piezo Axle Sensor General installation instructions. See the Special Provisions in the contract for Temperature Sensor installation instructions.

ROGER E. HORTON
STATE OF WASHINGTON
19894
REGISTERED
PROFESSIONAL ENGINEER

EXPIRES JANUARY 26, 2007

NOTE: THIS PLAN IS NOT A LEGAL ENGINEERING DOCUMENT BUT AN ELECTRONIC DUPLICATE. THE ORIGINAL, SIGNED BY THE ENGINEER AND APPROVED FOR PUBLICATION, IS KEPT ON FILE AT THE WASHINGTON STATE DEPARTMENT OF TRANSPORTATION. A COPY MAY BE OBTAINED UPON REQUEST.

WEIGH-IN-MOTION SITE INSTALLATION

STANDARD PLAN J-19

SHEET 1 OF 1 SHEETS

APPROVED FOR PUBLICATION

Harold J. Peterfeso — STATE DESIGN ENGINEER — *09-02-05* — DATE

Washington State Department of Transportation

DRAWN BY: MONIQUE GLICK

EFFECTIVE: APRIL 2, 2007 TO JANUARY 6, 2008

EFFECTIVE: APRIL 2, 2007 TO JANUARY 6, 2008

DRAWN BY: MONIQUE GLICK

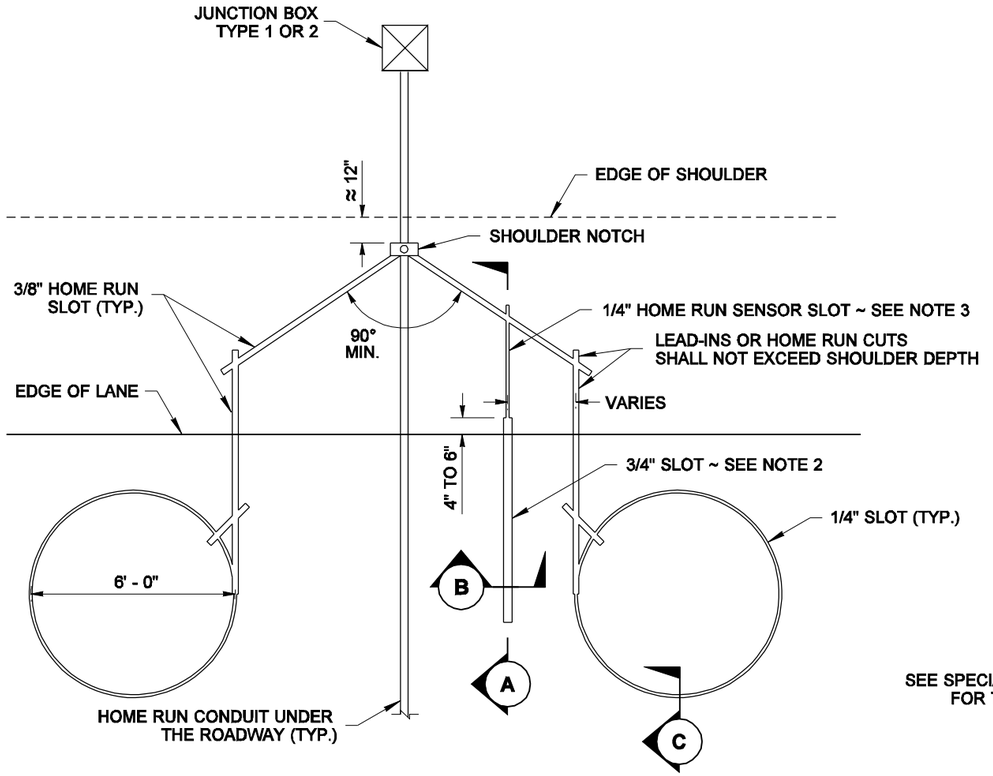

SAWCUT LAYOUT

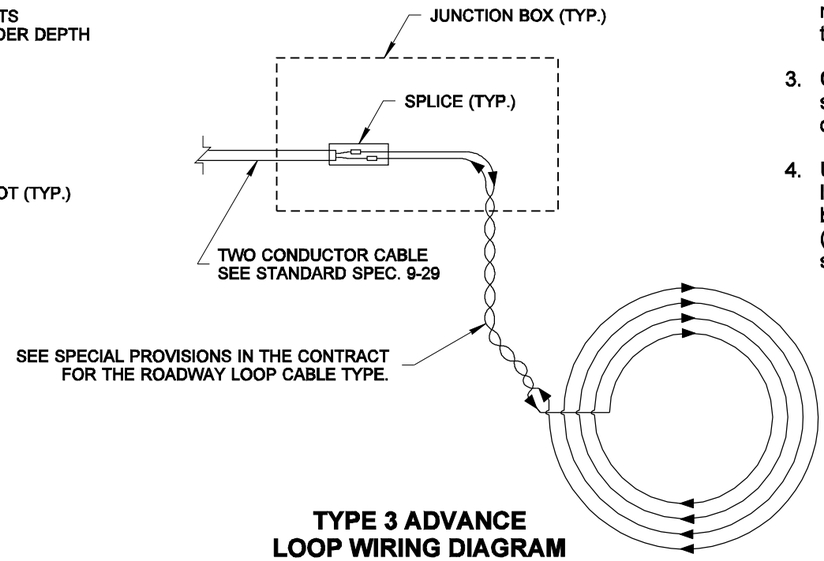

TYPE 3 ADVANCE
LOOP WIRING DIAGRAM

THESE ARE GENERAL INSTALLATION INSTRUCTIONS

SEE SPECIFIC MANUFACTURER'S INSTALLATION INSTRUCTIONS IN THE SPECIAL PROVISIONS OF THE CONTRACT

1. Using pavement crayons, paint, tape measure and cord, carefully mark the layout of the sensor installation. Ensure sensors are placed exactly perpendicular to the flow of traffic and that all lines are straight. Verify that the passive cable length is enough to reach the cabinet. DO NOT SPLICE CABLE. Leave a 4' minimum cable length inside of the cabinet.
2. Using a wet-cutting pavement saw with a 3/4" diamond blade, wet-cut the slot for the sensor. The slot must be 3/4" wide, +/- 1/16", by 1" minimum deep. Cut the slot 8" longer than the sensor length, (including the lead attachment).
3. Cut home run slots for Piezo sensors. Center the home run slot on the sensor slot. Cut the home run slots 2" minimum to 2 1/2" maximum deep and 1/4" minimum wide. Cut the slots wider if installing conduit.
4. Using a power washer with water, remove and collect all the slurry and loose material from the slots. Sweep the slots with a stiff wire bristled brush. Dry all of the slots with a large capacity air compressor (150 CFM minimum). All of the slots and the pavement 1' on either side must be completely dry.

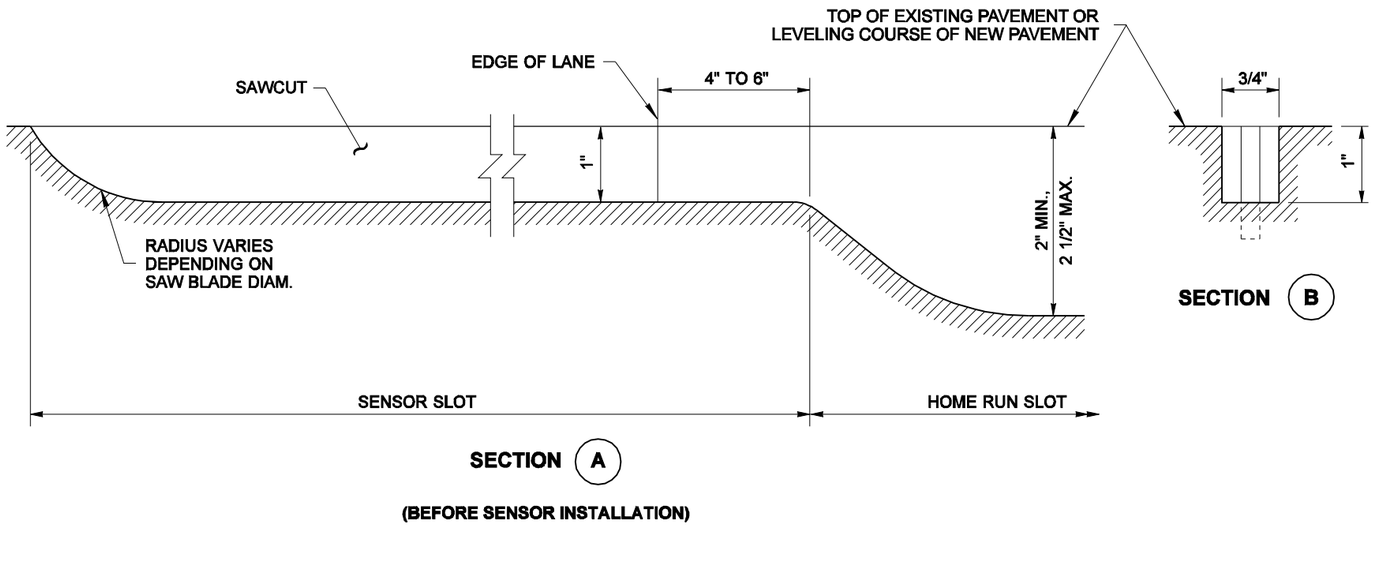

SECTION (A)

(BEFORE SENSOR INSTALLATION)

SECTION (B)

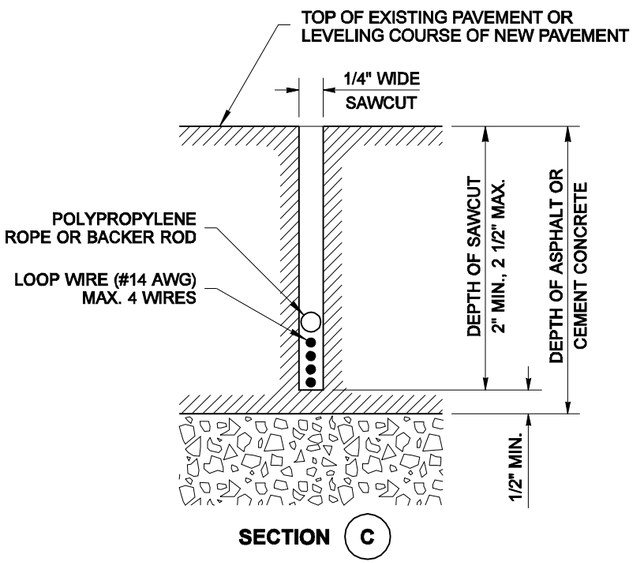

SECTION (C)

ROGER E. HORTON
STATE OF WASHINGTON
19894
REGISTERED
PROFESSIONAL ENGINEER

EXPIRES JANUARY 26, 2007

NOTE: THIS PLAN IS NOT A LEGAL ENGINEERING DOCUMENT BUT AN ELECTRONIC DUPLICATE. THE ORIGINAL, SIGNED BY THE ENGINEER AND APPROVED FOR PUBLICATION, IS KEPT ON FILE AT THE WASHINGTON STATE DEPARTMENT OF TRANSPORTATION. A COPY MAY BE OBTAINED UPON REQUEST.

PERMANENT TRAFFIC RECORDER AND WEIGH-IN-MOTION DETAILS STANDARD PLAN J-20

SHEET 1 OF 3 SHEETS

APPROVED FOR PUBLICATION

Harold J. Peterfeso — STATE DESIGN ENGINEER — *09-02-05* — DATE

Washington State Department of Transportation

EFFECTIVE: APRIL 2, 2007 TO JANUARY 6, 2008

EFFECTIVE: APRIL 2, 2007 TO JANUARY 6, 2008
EFFECTIVE: APRIL 2, 2007 TO JANUARY 6, 2008

DRAWN BY: MONIQUE GLICK

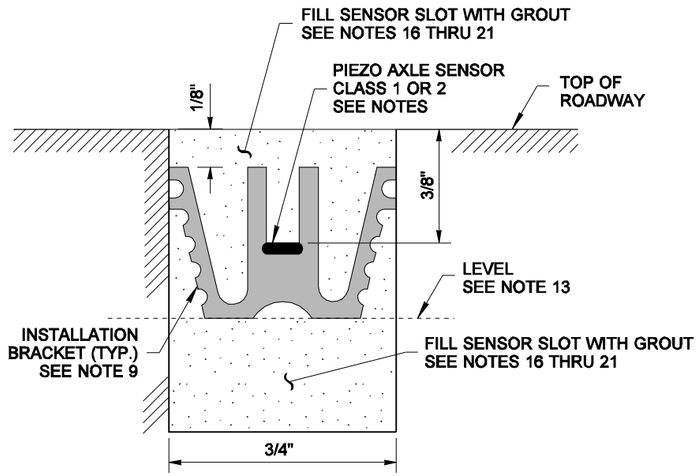

SECTION (D)

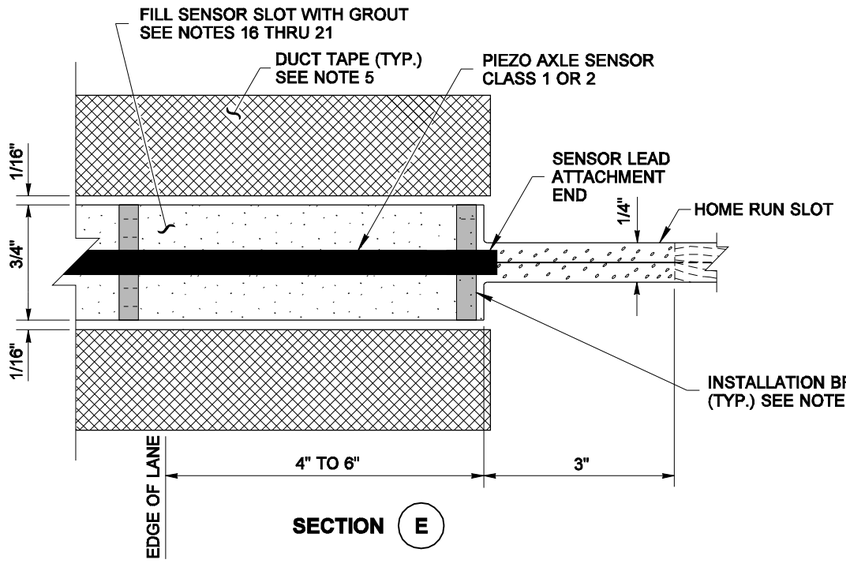

SECTION (E)

THESE ARE GENERAL INSTALLATION INSTRUCTIONS

SEE SPECIFIC MANUFACTURER'S INSTALLATION INSTRUCTIONS IN THE SPECIAL PROVISIONS OF THE CONTRACT

5. Place 2" duct tape along length of both sides of the sensor slot. Tape 1/16" away from the slot.
6. Visually inspect sensor to ensure it is straight without any twists or curls. Check passive cable for bare wire. Check lead attachment for cracks or gaps. Check the data sheet to ensure the correct sensor is being installed: Class 1 Piezo Axle sensor for Weigh-in-Motion, and Class 2 Piezo Axle sensor for Permanent Traffic Recorder.
7. Place the sensor on the tape next to the slot. Handle the sensor with clean latex (or equivalent) gloves.
8. Clean the sensor with the grit of a steel wool or emery pad. Wipe it down with isopropyl alcohol and a clean, lint free cloth.
9. Place the installation brackets on the sensor every 6" for the length of the sensor. Use the 3/4" brackets.
10. Place the sensor in the slot in the road. The end of the sensor should be at least 2" from the end of the slot, and should not touch the bottom of the slot. The lead attachment end should also not touch the bottom or the sides of the slot.
11. If any of the 3/4" brackets do not fit snugly against the sides of the slot or are loose, replace them with a 1" bracket.
12. Starting at the lead attachment end, position the sensor so that it is parallel to the surface of the road, approximately 3/8" below the surface of the road. At this depth, the installation brackets are 1/8" below the surface of the road.
13. Visually inspect the length of the sensor to ensure that it is at a uniform depth along its length and that it is level (not twisted, canted or bent).
14. Run the passive wire the length of the home run slot. Place the poly-propylene rope under and over the passive cable (inside the slot). This will keep the grout from running out into the deeper home run slot.
15. Place all of the induction loops to the site specifications.
16. See the Special Provisions in the contract for the grout type used for Weigh-in-Motion Peizo Sensors and Permanent Traffic recorder Peizo sensors.
17. Using a low speed mixing drill (450 rpm) and a mixing paddle, premix the grout for 2 minutes or until smooth. Add hardener to the grout and mix according to the manufacturer's instructions.
18. Pour the grout into the slot using a small bead. Make sure that the grout flows under the sensor slowly, eliminating air pockets. Start at the end and pour towards the lead attachment. Repeat until the slot is completely full of grout, at least in 2 passes, (approximately 1/2" thick each).
19. Using a putty knife or a trowel lightly spread the grout smooth along the length of the slot. The resin should be slightly higher (1/16") than the tape as it will shrink while curing.
20. Remove the tape as soon as the final grout pour is complete.
21. Once the grout for the Weigh in Motion Peizo Sensors is cured, (approximately 35 minutes, depending on grout type and ambient temperature), use a belt sander to sand the top of the grout flush with the surface.
22. Allow the loop sealant and the grout for both sensor installations to fully cure (45-60 minutes) before opening to traffic.

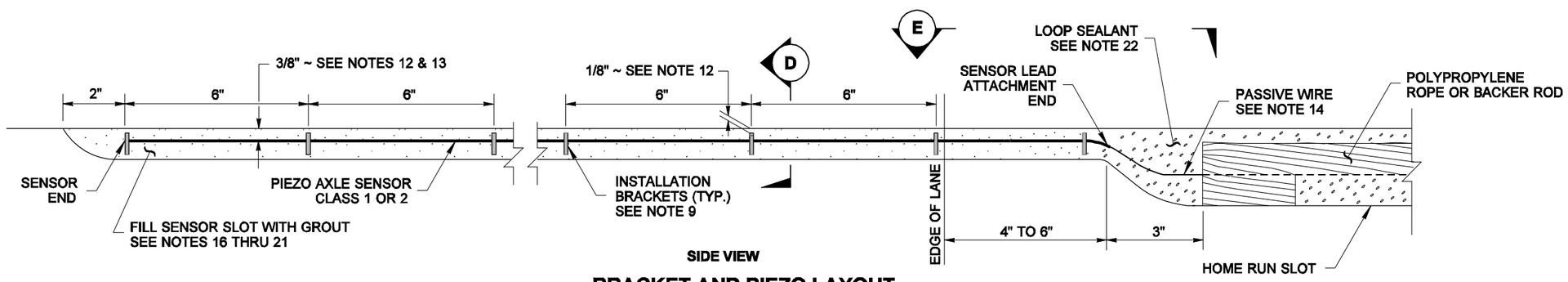

BRACKET AND PIEZO LAYOUT

ROGER E. HORTON
STATE OF WASHINGTON
19894
REGISTERED
PROFESSIONAL ENGINEER

EXPIRES JANUARY 26, 2007

NOTE: THIS PLAN IS NOT A LEGAL ENGINEERING DOCUMENT BUT AN ELECTRONIC DUPLICATE. THE ORIGINAL, SIGNED BY THE ENGINEER, AND APPROVED FOR PUBLICATION, IS KEPT ON FILE AT THE WASHINGTON STATE DEPARTMENT OF TRANSPORTATION. A COPY MAY BE OBTAINED UPON REQUEST.

PERMANENT TRAFFIC RECORDER AND WEIGH-IN-MOTION DETAILS STANDARD PLAN J-20

SHEET 2 OF 3 SHEETS

APPROVED FOR PUBLICATION

Harold J. Peterfeso — STATE DESIGN ENGINEER — *09-02-05* — DATE

Washington State Department of Transportation

EFFECTIVE: APRIL 2, 2007 TO JANUARY 6, 2008
EFFECTIVE: APRIL 2, 2007 TO JANUARY 6, 2008

EFFECTIVE: APRIL 2, 2007 TO JANUARY 6, 2008

EFFECTIVE: APRIL 2, 2007 TO JANUARY 6, 2008

DRAWN BY: MONIQUE GLICK

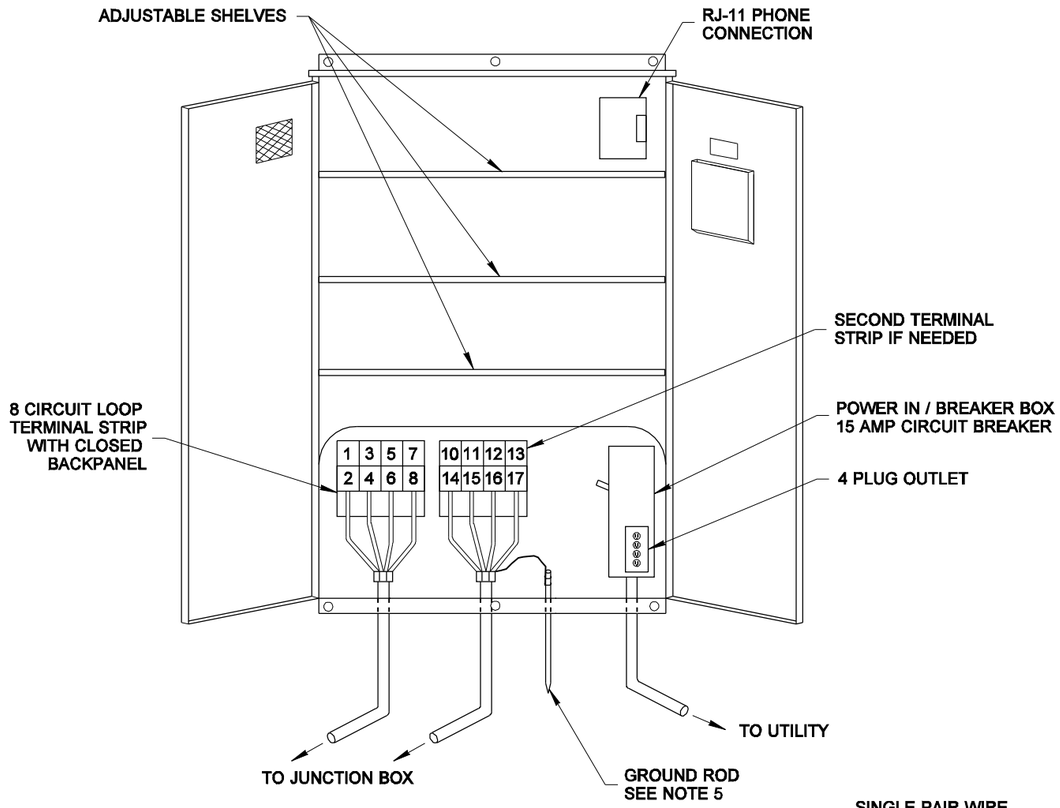

SERVICE CABINET (TYP.)

SEE NOTES 2 THRU 5

COLOR CODE IDENTIFICATION	
COLOR	CIRCUIT NO.
BLACK	0
BROWN	1
RED	2
ORANGE	3
YELLOW	4
GREEN	5
BLUE	6
VIOLET	7
GRAY	8
BROWN & BLACK	10
BROWN & BROWN	11
BROWN & RED	12
BROWN & ORANGE	13
BROWN & YELLOW	14
BROWN & GREEN	15
BROWN & BLUE	16
BROWN & VIOLET	17
WHITE IS FOR INCREASING MILEPOSTS	

NOTES

1. The Loop and Piezo leads in all Junction Boxes and Cabinets are to be color-coded. Use colored tape on each specific wire, see table. Wrap the tape on the wires approximately 6" beyond conduit in all Junction Boxes.
2. The maximum load in the Cabinet is 5 Amps.
3. The Cabinet may be pedestal or pad mount, see Standard Plan J-6c for details.
4. See Special Provisions in the contract for the Cabinet dimensions. See Standard Specification 9-29 for other requirements.
5. For Grounding Details, See Standard Plan J-9a. See Standard Specification 8-20 for other requirements.

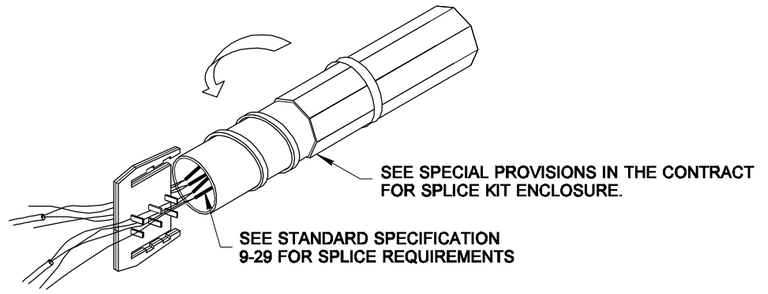

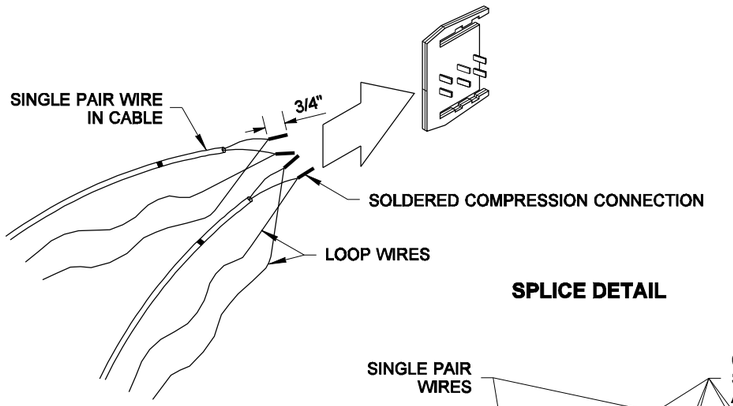

SPLICE DETAIL

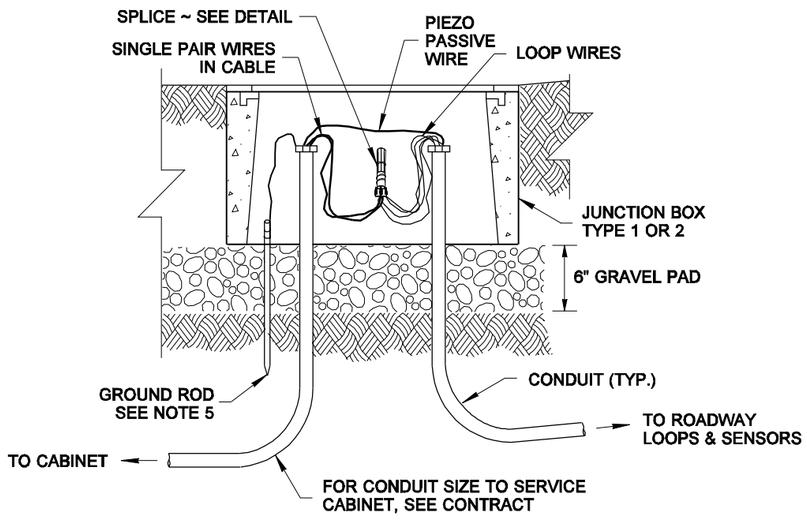

JUNCTION BOX

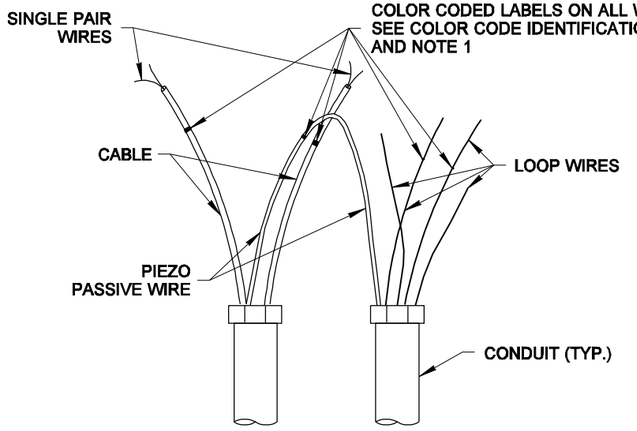

JUNCTION BOX WIRING

(SHOWN PRIOR TO SPLICING)

ROGER E. HORTON
STATE OF WASHINGTON
19894
REGISTERED
PROFESSIONAL ENGINEER

EXPIRES JANUARY 26, 2007

NOTE: THIS PLAN IS NOT A LEGAL ENGINEERING DOCUMENT BUT AN ELECTRONIC DUPLICATE. THE ORIGINAL, SIGNED BY THE ENGINEER AND APPROVED FOR PUBLICATION, IS KEPT ON FILE AT THE WASHINGTON STATE DEPARTMENT OF TRANSPORTATION. A COPY MAY BE OBTAINED UPON REQUEST.

PERMANENT TRAFFIC RECORDER AND WEIGH-IN-MOTION DETAILS STANDARD PLAN J-20

SHEET 3 OF 3 SHEETS

APPROVED FOR PUBLICATION

Harold J. Peterfeso — STATE DESIGN ENGINEER

09-02-05 — DATE

Washington State Department of Transportation

EFFECTIVE: APRIL 2, 2007 TO JANUARY 6, 2008

EFFECTIVE: APRIL 2, 2007 TO JANUARY 6, 2008

EFFECTIVE: APRIL 2, 2007 TO JANUARY 6, 2008
EFFECTIVE: APRIL 2, 2007 TO JANUARY 6, 2008

DRAWN BY: ELENA BRUNSTEIN

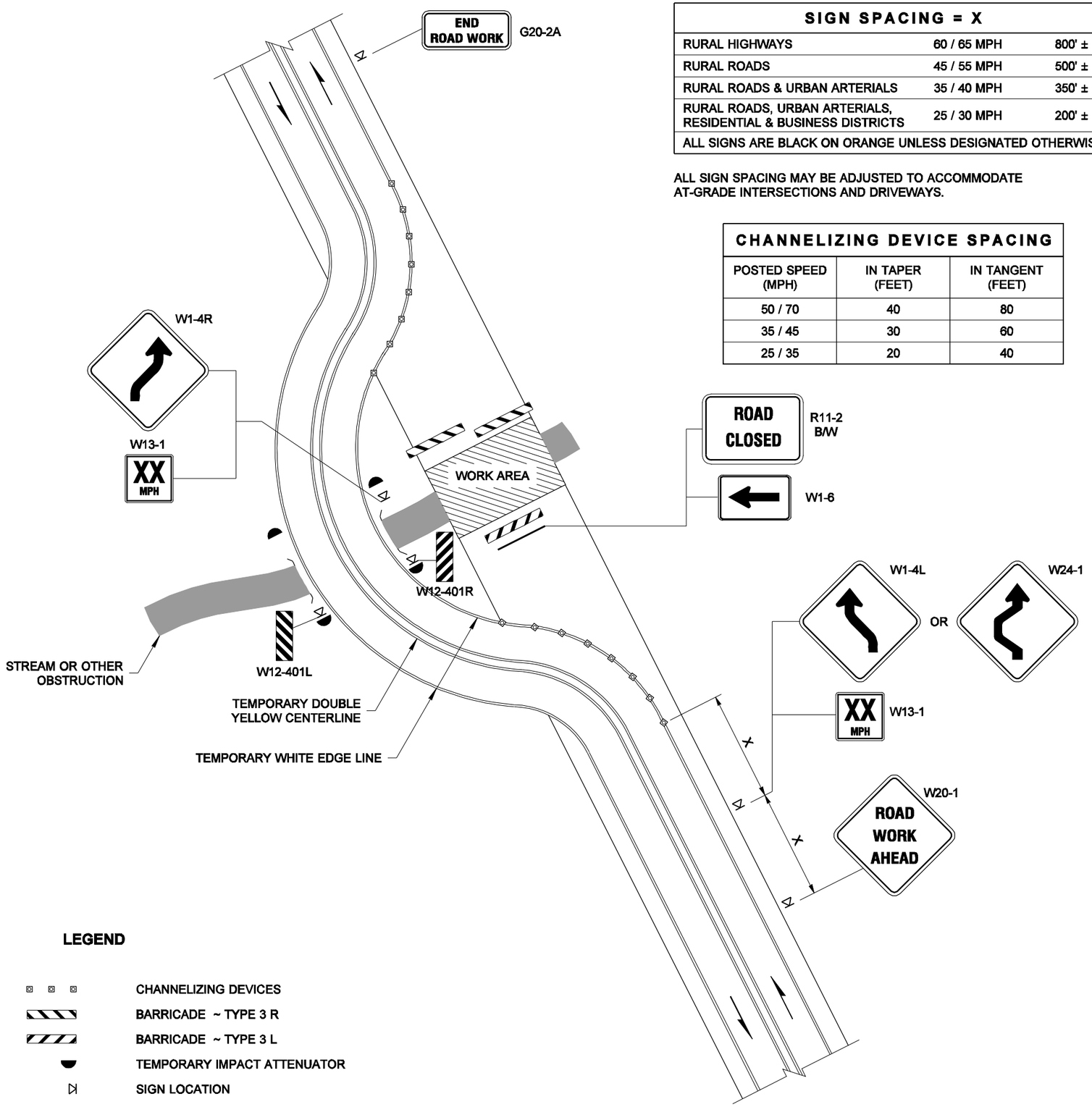

SIGN SPACING = X		
RURAL HIGHWAYS	60 / 65 MPH	800' ±
RURAL ROADS	45 / 55 MPH	500' ±
RURAL ROADS & URBAN ARTERIALS	35 / 40 MPH	350' ±
RURAL ROADS, URBAN ARTERIALS, RESIDENTIAL & BUSINESS DISTRICTS	25 / 30 MPH	200' ±
ALL SIGNS ARE BLACK ON ORANGE UNLESS DESIGNATED OTHERWISE		

ALL SIGN SPACING MAY BE ADJUSTED TO ACCOMMODATE AT-GRADE INTERSECTIONS AND DRIVEWAYS.

CHANNELIZING DEVICE SPACING		
POSTED SPEED (MPH)	IN TAPER (FEET)	IN TANGENT (FEET)
50 / 70	40	80
35 / 45	30	60
25 / 35	20	40

NOTES

1. Sign sequence is the same for both directions of travel. Adjust for the direction of roadway curves.
2. Flashing Warning Lights (Type B per MUTCD) and/or flags may be used to call attention to the advance Warning Signs.
3. Existing conflicting pavement markings and signs that are no longer applicable shall be removed or obliterated. Temporary pavement markings shall be used to delineate bypass detour.
4. Raised pavement markers and/or temporary guideposts may be used on bypass as directed by the Engineer.
5. Steady Burning Warning Light (Type C per MUTCD) shall be used to mark Channelizing Devices at night.
6. Where advisory speed is 30 mph or less, reverse turn signs should be used. Other curve or turn Warning Signs may be substituted to depict roadway alignment.
7. Temporary barriers and end treatments shall be crashworthy.
8. To improve visibility, consider use of temporary illumination at closure points.
9. For signs size refer to Manual on Uniform Traffic Control Devices (MUTCD) and WSDOT Sign Fabrication Manual M55-05.

FOR LOCAL AGENCY USE ONLY
NOT FOR USE ON STATE ROUTES

THEODORE J. TREPANIER
STATE OF WASHINGTON
25335
REGISTERED
PROFESSIONAL ENGINEER

EXPIRES AUGUST 9, 2007

NOTE: THIS PLAN IS NOT A LEGAL ENGINEERING DOCUMENT BUT AN ELECTRONIC DUPLICATE. THE ORIGINAL, SIGNED BY THE ENGINEER AND APPROVED FOR PUBLICATION, IS KEPT ON FILE AT THE WASHINGTON STATE DEPARTMENT OF TRANSPORTATION. A COPY MAY BE OBTAINED UPON REQUEST.

ROAD CLOSURE WITH DIVERSION

STANDARD PLAN K-10.20-00

SHEET 1 OF 1 SHEET

APPROVED FOR PUBLICATION

Ken L. Smith — STATE DESIGN ENGINEER
02-15-07 — DATE

Washington State Department of Transportation

EFFECTIVE: APRIL 2, 2007 TO JANUARY 6, 2008
EFFECTIVE: APRIL 2, 2007 TO JANUARY 6, 2008

EFFECTIVE: APRIL 2, 2007 TO JANUARY 6, 2008

DRAWN BY: ELENA BRUNSTEIN

SIGN SPACING = X (1)		
RURAL ROADS	45 / 55 MPH	500' ±
RURAL ROADS & URBAN ARTERIALS	35 / 40 MPH	350' ±
RURAL ROADS, URBAN ARTERIALS, RESIDENTIAL & BUSINESS DISTRICTS	25 / 30 MPH	200' ± (2)
URBAN STREETS	25 MPH OR LESS	100' ± (2)
ALL SIGNS ARE BLACK ON ORANGE UNLESS DESIGNATED OTHERWISE		

(1) ALL SIGN SPACING MAY BE ADJUSTED TO ACCOMMODATE AT-GRADE INTERSECTIONS AND DRIVEWAYS.

(2) THIS SIGN SPACING MAY BE REDUCED IN URBAN AREAS TO FIT ROADWAY CONDITIONS.

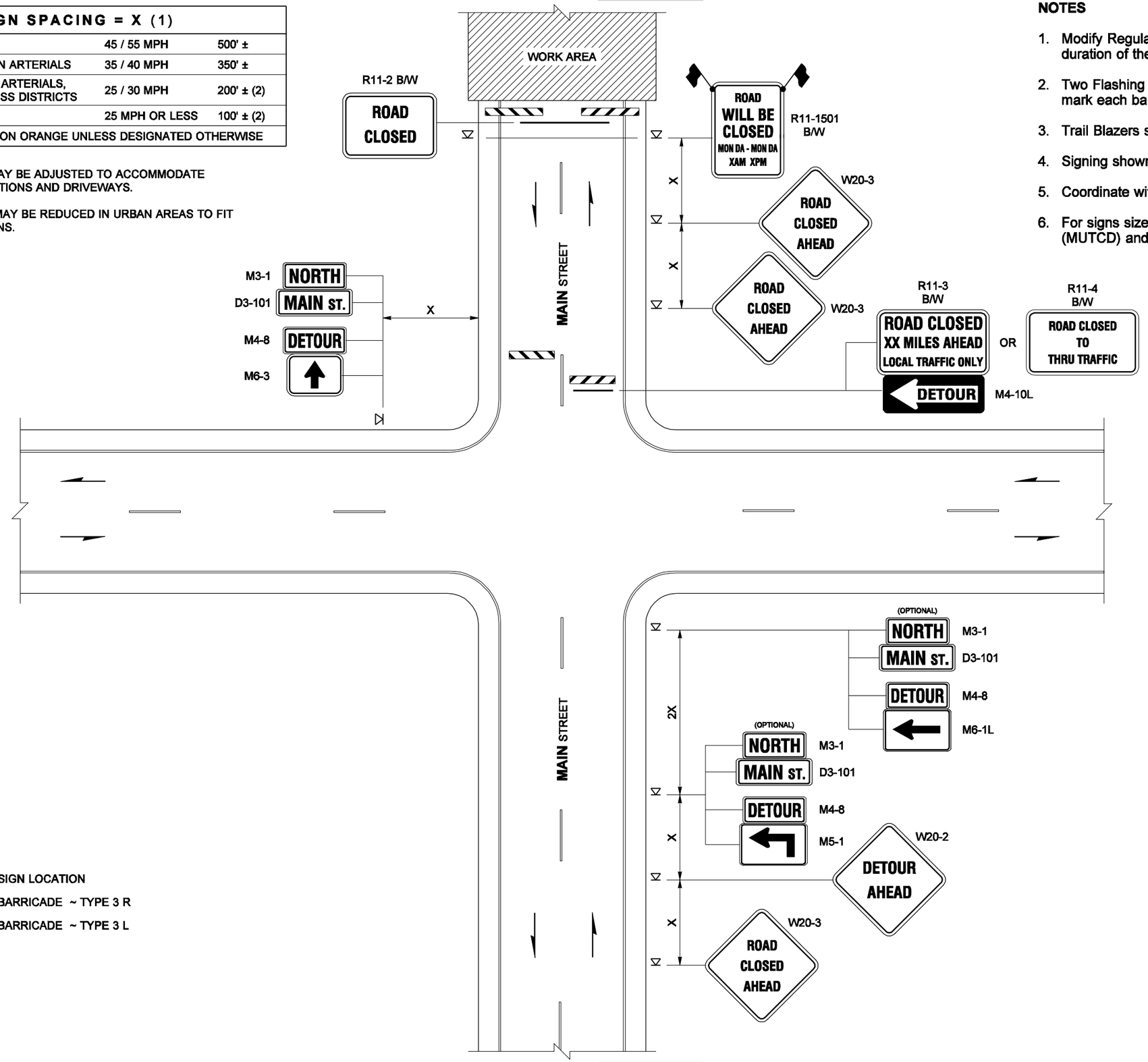

LEGEND

- SIGN LOCATION
- BARRICADE ~ TYPE 3 R
- BARRICADE ~ TYPE 3 L

NOTES

1. Modify Regulatory Traffic Control Devices, as needed, for the duration of the detour.
2. Two Flashing Warning Lights (Type A per MUTCD) may be used to mark each barricade at night.
3. Trail Blazers shall be installed throughout the detour, as appropriate.
4. Signing shown for the one direction only.
5. Coordinate with emergency services.
6. For signs size refer to Manual on Uniform Traffic Control Devices (MUTCD) and WSDOT Sign Fabrication Manual M55-05.

FOR LOCAL AGENCY USE ONLY
NOT FOR USE ON STATE ROUTES

THEODORE J. TREPANIER
STATE OF WASHINGTON
25335
REGISTERED
PROFESSIONAL ENGINEER

EXPIRES AUGUST 9, 2007

NOTE: THIS PLAN IS NOT A LEGAL ENGINEERING DOCUMENT BUT AN ELECTRONIC DUPLICATE. THE ORIGINAL, SIGNED BY THE ENGINEER AND APPROVED FOR PUBLICATION, IS KEPT ON FILE AT THE WASHINGTON STATE DEPARTMENT OF TRANSPORTATION. A COPY MAY BE OBTAINED UPON REQUEST.

ROAD CLOSURE WITH OFF-SITE DETOUR

STANDARD PLAN K-10.40-00

SHEET 1 OF 1 SHEET

APPROVED FOR PUBLICATION

Ken L. Smith — STATE DESIGN ENGINEER

02-15-07 — DATE

Washington State Department of Transportation

EFFECTIVE: APRIL 2, 2007 TO JANUARY 6, 2008

EFFECTIVE: APRIL 2, 2007 TO JANUARY 6, 2008

EFFECTIVE: APRIL 2, 2007 TO JANUARY 6, 2008

DRAWN BY: ELENA BRUNSTEIN

LONGITUDINAL BUFFER SPACE = B					
POSTED SPEED (MPH)	25	30	35	40	45
LENGTH **B** (FEET)	55	85	120	170	270

CHANNELIZING DEVICE SPACING		
POSTED SPEED (MPH)	IN TAPER (FEET)	IN TANGENT (FEET)
35 / 45	30	60
25/ 30	20	40

SIGN SPACING = X		
RURAL ROADS	45 / 55 MPH	500' ±
RURAL ROADS & URBAN ARTERIALS	35 / 40 MPH	350' ±
RURAL ROADS, URBAN ARTERIALS, RESIDENTIAL & BUSINESS DISTRICTS	25 / 30 MPH	200' ±
URBAN STREETS	25 MPH OR LESS	100' ±
ALL SIGNS ARE BLACK ON ORANGE UNLESS DESIGNATED OTHERWISE		

ALL SIGN SPACING MAY BE ADJUSTED TO ACCOMMODATE AT-GRADE INTERSECTIONS AND DRIVEWAYS.

NOTES

1. This plan is intended for use on roadways when traffic volumes create sufficient gaps for motor vehicles to yield.
2. Steady Burning Warning Lights (Type C per MUTCD) shall be used to mark Channelizing Devices at night.
3. Adequate sight distance shall be provided for drivers to see opposing traffic, otherwise use flaggers and/or Temporary Signal.
4. Extend Channelizing Device taper across shoulder ~ recommended.
5. Post mount signs when in place for 3 days or longer.
6. For speed limit 35 mph or higher replace W1-3R with W1-4R.
7. For signs size refer to Manual on Uniform Traffic Control Devices (MUTCD) and WSDOT Sign Fabrication Manual M55-05.

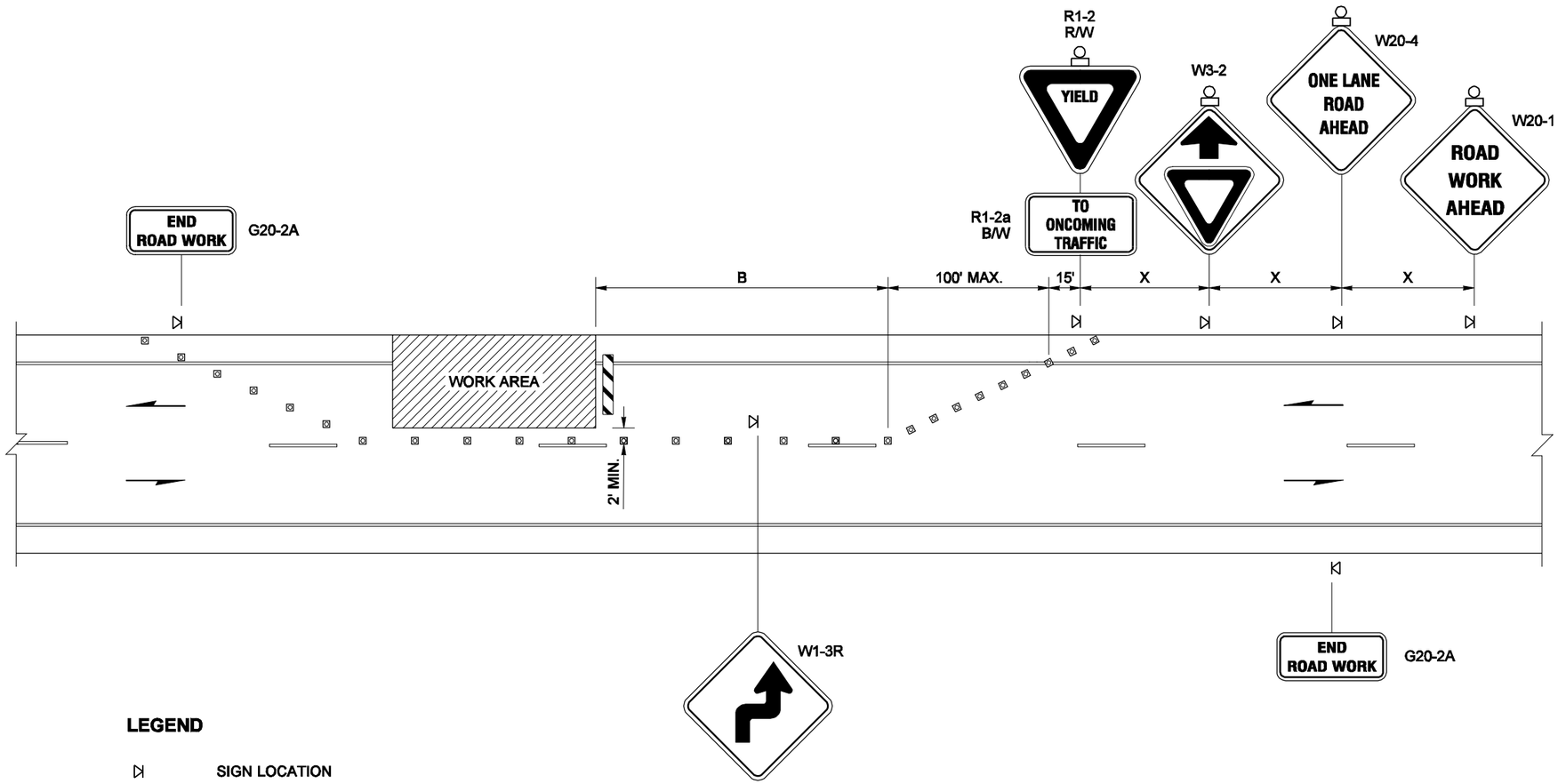

LEGEND

- SIGN LOCATION
- CHANNELIZING DEVICES
- BARRICADE ~ TYPE 3 L
- FLASHING WARNING LIGHT

FOR LOCAL AGENCY USE ONLY
NOT FOR USE ON STATE ROUTES

THEODORE J. TREPANIER
STATE OF WASHINGTON
25335
REGISTERED
PROFESSIONAL ENGINEER

EXPIRES AUGUST 9, 2007

NOTE: THIS PLAN IS NOT A LEGAL ENGINEERING DOCUMENT BUT AN ELECTRONIC DUPLICATE. THE ORIGINAL, SIGNED BY THE ENGINEER AND APPROVED FOR PUBLICATION, IS KEPT ON FILE AT THE WASHINGTON STATE DEPARTMENT OF TRANSPORTATION. A COPY MAY BE OBTAINED UPON REQUEST.

LANE CLOSURE WITHOUT FLAGGERS ~ LOW VOLUME ROAD STANDARD PLAN K-20.20-00

SHEET 1 OF 1 SHEET

APPROVED FOR PUBLICATION

Ken L. Smith — STATE DESIGN ENGINEER
02-15-07 — DATE

Washington State Department of Transportation

EFFECTIVE: APRIL 2, 2007 TO JANUARY 6, 2008

EFFECTIVE: APRIL 2, 2007 TO JANUARY 6, 2008

EFFECTIVE: APRIL 2, 2007 TO JANUARY 6, 2008
EFFECTIVE: APRIL 2, 2007 TO JANUARY 6, 2008

DRAWN BY: ELENA BRUNSTEIN

LONGITUDINAL BUFFER SPACE = B									
POSTED SPEED (MPH)	25	30	35	40	45	50	55	60	65
LENGTH **B** (FEET)	155	200	250	305	360	425	495	570	645

BUFFER DATA	
TYPICAL PROTECTIVE VEHICLE WITH TMA (SEE NOTE 1)	
VEHICLE TYPE	**LOADED WEIGHT**
4 YARD DUMP TRUCK, SERVICE TRUCK, FLAT BED, ETC.	MINIMUM WEIGHT 15,000 LBS. (MAXIMUM WEIGHT SHALL BE IN ACCORDANCE WITH MANUFACTURER RECOMMENDATION)
◇1 **ROLL AHEAD STOPPING DISTANCE** = 30 FEET MIN. (DRY PAVEMENT ASSUMED)	

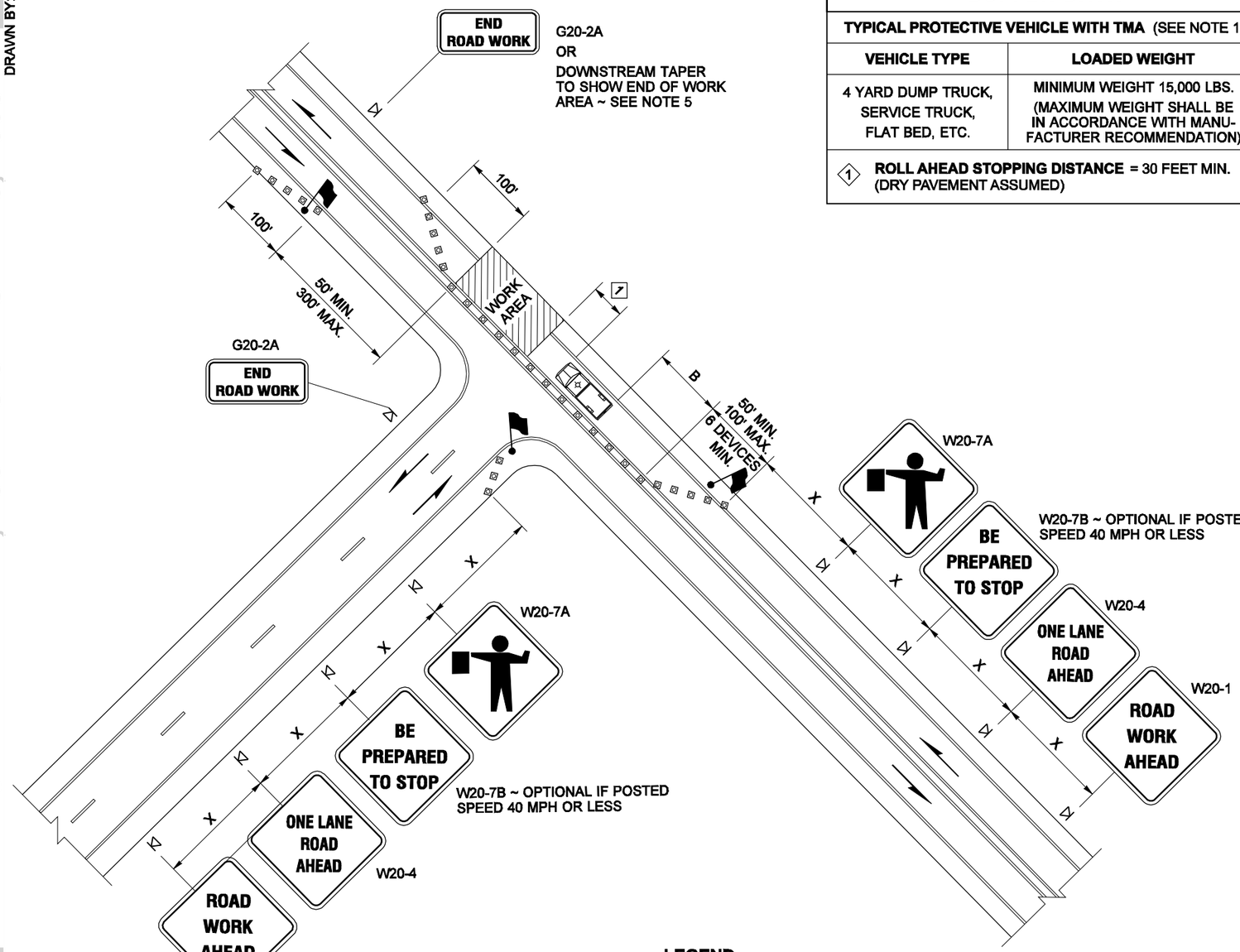

LEGEND

- FLAGGING STATION
- SIGN LOCATION
- CHANNELIZING DEVICES
- PROTECTIVE VEHICLE ~ RECOMMENDED

NOTES

1. A Protective Vehicle is recommended regardless if a Truck Mounted Attenuator (TMA) is available; a work vehicle may be used. When no TMA is used, the Protective Vehicle shall be strategically located to shield workers, with no specific Roll-Ahead distance.
2. Night work requires additional roadway lighting at flagging stations. See WSDOT Standard Specifications for additional details.
3. Extend Channelizing Device taper across shoulder ~ recommended.
4. Sign sequence is the same for both directions of travel on the roadway.
5. Channelizing Device spacing for the downstream taper option shall be 20' O.C.
6. For signs size refer to Manual on Uniform Traffic Control Devices (MUTCD) and WSDOT Sign Fabrication Manual M55-05.

SIGN SPACING = X (1)		
RURAL HIGHWAYS	60 / 65 MPH	800' ±
RURAL ROADS	45 / 55 MPH	500' ±
RURAL ROADS & URBAN ARTERIALS	35 / 40 MPH	350' ±
RURAL ROADS, URBAN ARTERIALS, RESIDENTIAL & BUSINESS DISTRICTS	25 / 30 MPH	200' ± (2)
URBAN STREETS	25 MPH OR LESS	100' ± (2)
ALL SIGNS ARE BLACK ON ORANGE UNLESS DESIGNATED OTHERWISE		

(1) ALL SIGN SPACING MAY BE ADJUSTED TO ACCOMMODATE INTERCHANGE RAMPS, AT-GRADE INTERSECTIONS, AND DRIVEWAYS.

(2) THIS SIGN SPACING MAY BE REDUCED IN URBAN AREAS TO FIT ROADWAY CONDITIONS.

FOR LOCAL AGENCY USE ONLY
NOT FOR USE ON STATE ROUTES

THEODORE J. TREPANIER
STATE OF WASHINGTON
25335
REGISTERED
PROFESSIONAL ENGINEER

EXPIRES AUGUST 9, 2007

NOTE: THIS PLAN IS NOT A LEGAL ENGINEERING DOCUMENT BUT AN ELECTRONIC DUPLICATE. THE ORIGINAL, SIGNED BY THE ENGINEER, AND APPROVED FOR PUBLICATION, IS KEPT ON FILE AT THE WASHINGTON STATE DEPARTMENT OF TRANSPORTATION. A COPY MAY BE OBTAINED UPON REQUEST.

LANE CLOSURE WITH FLAGGER CONTROL

STANDARD PLAN K-20.40-00

SHEET 1 OF 1 SHEET

APPROVED FOR PUBLICATION

Ken L. Smith — STATE DESIGN ENGINEER
02-15-07 — DATE

Washington State Department of Transportation

EFFECTIVE: APRIL 2, 2007 TO JANUARY 6, 2008
EFFECTIVE: APRIL 2, 2007 TO JANUARY 6, 2008

EFFECTIVE: APRIL 2, 2007 TO JANUARY 6, 2008
EFFECTIVE: APRIL 2, 2007 TO JANUARY 6, 2008

DRAWN BY: ELENA BRUNSTEIN

MINIMUM TAPER LENGTH = L (FEET)								
LANE WIDTH (FEET)	POSTED SPEED (MPH) 25	30	35	40	45	50	55	60
10	105	150	205	270	450	500	550	-
11	115	165	225	294	495	550	605	660
12	125	180	245	320	540	600	660	720

CHANNELIZING DEVICE SPACING		
POSTED SPEED (MPH)	IN TAPER (FEET)	IN TANGENT (FEET)
50 / 65	40	80
35 / 45	30	60
25 / 30	20	40

NOTES

1. Channelizing Devices are recommended along centerline to separate traffic from work operation. Devices are required at tapers to shift traffic movement between lanes and to protect all flagging stations.
2. Night work requires additional roadway lighting at flagging stations. See WSDOT Standard Specifications for additional details.
3. For signs size refer to Manual on Uniform Traffic Control Devices (MUTCD) and WSDOT Sign Fabrication Manual M55-05.
4. See Standard Plan K-20.40 for additional details.

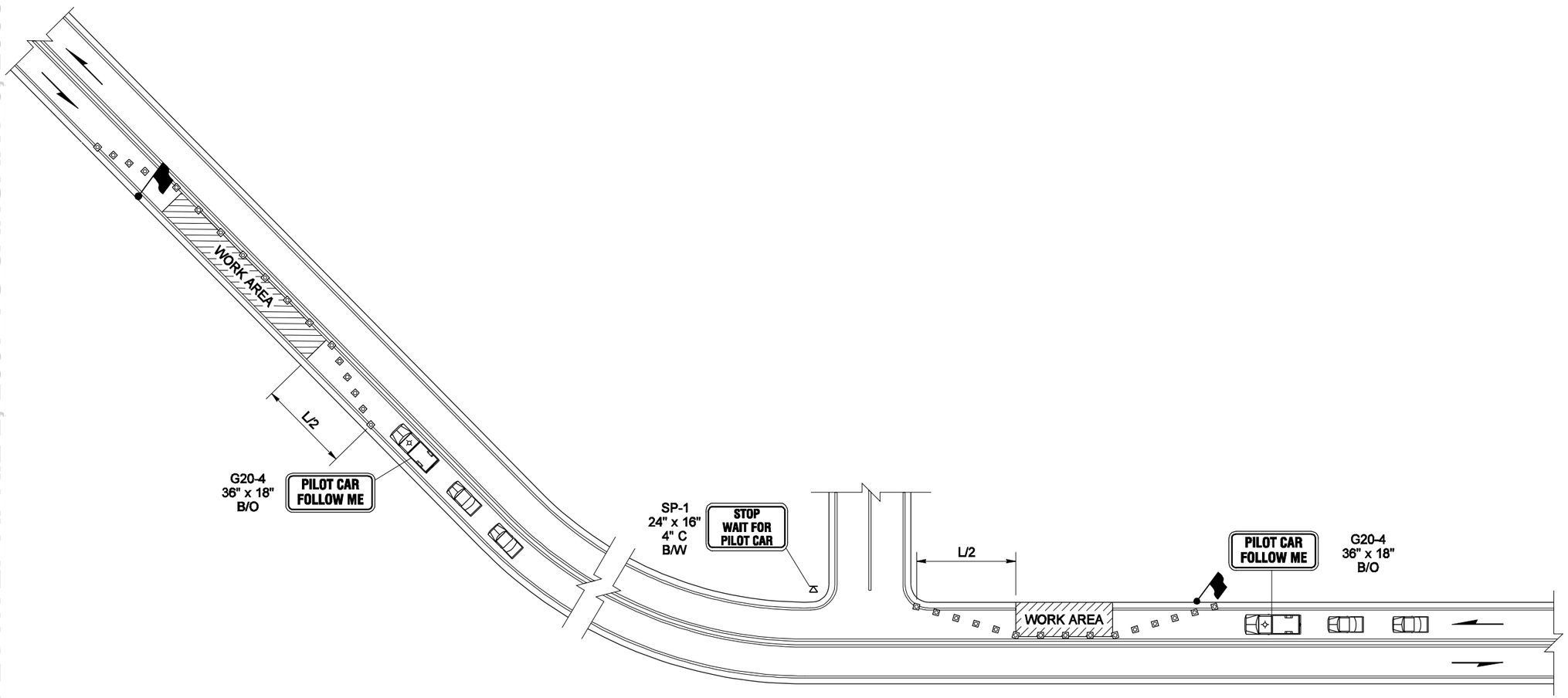

LEGEND

- FLAGGING STATION
- SIGN LOCATION
- CHANNELIZING DEVICES
- PILOT VEHICLE
- MOTORIST VEHICLE

FOR LOCAL AGENCY USE ONLY
NOT FOR USE ON STATE ROUTES

THEODORE J. TREPANIER
STATE OF WASHINGTON
25335
REGISTERED
PROFESSIONAL ENGINEER

EXPIRES AUGUST 9, 2007

NOTE: THIS PLAN IS NOT A LEGAL ENGINEERING DOCUMENT BUT AN ELECTRONIC DUPLICATE. THE ORIGINAL, SIGNED BY THE ENGINEER AND APPROVED FOR PUBLICATION, IS KEPT ON FILE AT THE WASHINGTON STATE DEPARTMENT OF TRANSPORTATION. A COPY MAY BE OBTAINED UPON REQUEST.

LANE CLOSURE WITH PILOT CAR

STANDARD PLAN K-20.60-00

SHEET 1 OF 1 SHEET

APPROVED FOR PUBLICATION

Ken L. Smith — STATE DESIGN ENGINEER — *02-15-07* — DATE

Washington State Department of Transportation

EFFECTIVE: APRIL 2, 2007 TO JANUARY 6, 2008
EFFECTIVE: APRIL 2, 2007 TO JANUARY 6, 2008

EFFECTIVE: APRIL 2, 2007 TO JANUARY 6, 2008

DRAWN BY: ELENA BRUNSTEIN

LONGITUDINAL BUFFER SPACE = B								
POSTED SPEED (MPH)	25	30	35	40	45	50	55	60
LENGTH **B** (FEET)	155	200	250	305	360	425	495	570

BUFFER DATA	
TYPICAL PROTECTIVE VEHICLE WITH TMA (SEE NOTE 1)	
VEHICLE TYPE	**LOADED WEIGHT**
4 YARD DUMP TRUCK, SERVICE TRUCK, FLAT BED, ETC.	MINIMUM WEIGHT 15,000 LBS. (MAXIMUM WEIGHT SHALL BE IN ACCORDANCE WITH MANUFACTURER RECOMMENDATION)
◇1 **ROLL AHEAD STOPPING DISTANCE** = 30 FEET MIN. (DRY PAVEMENT ASSUMED)	

MINIMUM TAPER LENGTH = L (FEET)								
LANE WIDTH (FEET)	POSTED SPEED (MPH)							
	25	30	35	40	45	50	55	60
10	105	150	205	270	450	500	550	-
11	115	165	225	294	495	550	605	660
12	125	180	245	320	540	600	660	720

CHANNELIZING DEVICE SPACING		
POSTED SPEED (MPH)	IN TAPER (FEET)	IN TANGENT (FEET)
50 / 60	40	80
35 / 45	30	60
25 / 30	20	40

SIGN SPACING = X (1)		
RURAL HIGHWAYS	60 / 65 MPH	800' ±
RURAL ROADS	45 / 55 MPH	500' ±
RURAL ROADS & URBAN ARTERIALS	35 / 40 MPH	350' ±
RURAL ROADS, URBAN ARTERIALS, RESIDENTIAL & BUSINESS DISTRICTS	25 / 30 MPH	200' ± (2)
URBAN STREETS	25 MPH OR LESS	100' ± (2)
ALL SIGNS ARE BLACK ON ORANGE UNLESS DESIGNATED OTHERWISE		

(1) ALL SIGN SPACING MAY BE ADJUSTED TO ACCOMMODATE INTERCHANGE RAMPS, AT-GRADE INTERSECTIONS, DRIVEWAYS.

(2) THIS SIGN SPACING MAY BE REDUCED IN URBAN AREAS TO FIT ROADWAY CONDITIONS.

NOTES

1. A Protective Vehicle is recommended regardless if a Truck Mounted Attenuator (TMA) is available; a work vehicle may be used. When no TMA is used, the Protective Vehicle shall be strategically located to shield workers, with no specific Roll-Ahead distance.
2. Existing conflicting pavement markings that are no longer applicable shall be removed or obliterated. Temporary markings shall be used as necessary, and signs shall be post mounted for long term projects.
3. Steady-Burn Warning Lights (Type C, MUTCD) shall be used to mark Channelizing Devices at night.
4. For speed limits of 30 mph or less, sign W1-3 shall be used in lieu of sign W1-4.
5. Extend device taper (L/3) across shoulder ~ recommended.
6. Portable Changeable Message Sign (PCMS) ~ recommended.
7. Channelizing Device spacing for the downstream taper option shall be 20' O.C.
8. For signs size refer to Manual on Uniform Traffic Control Devices (MUTCD) and WSDOT Sign Fabrication Manual M55-05.

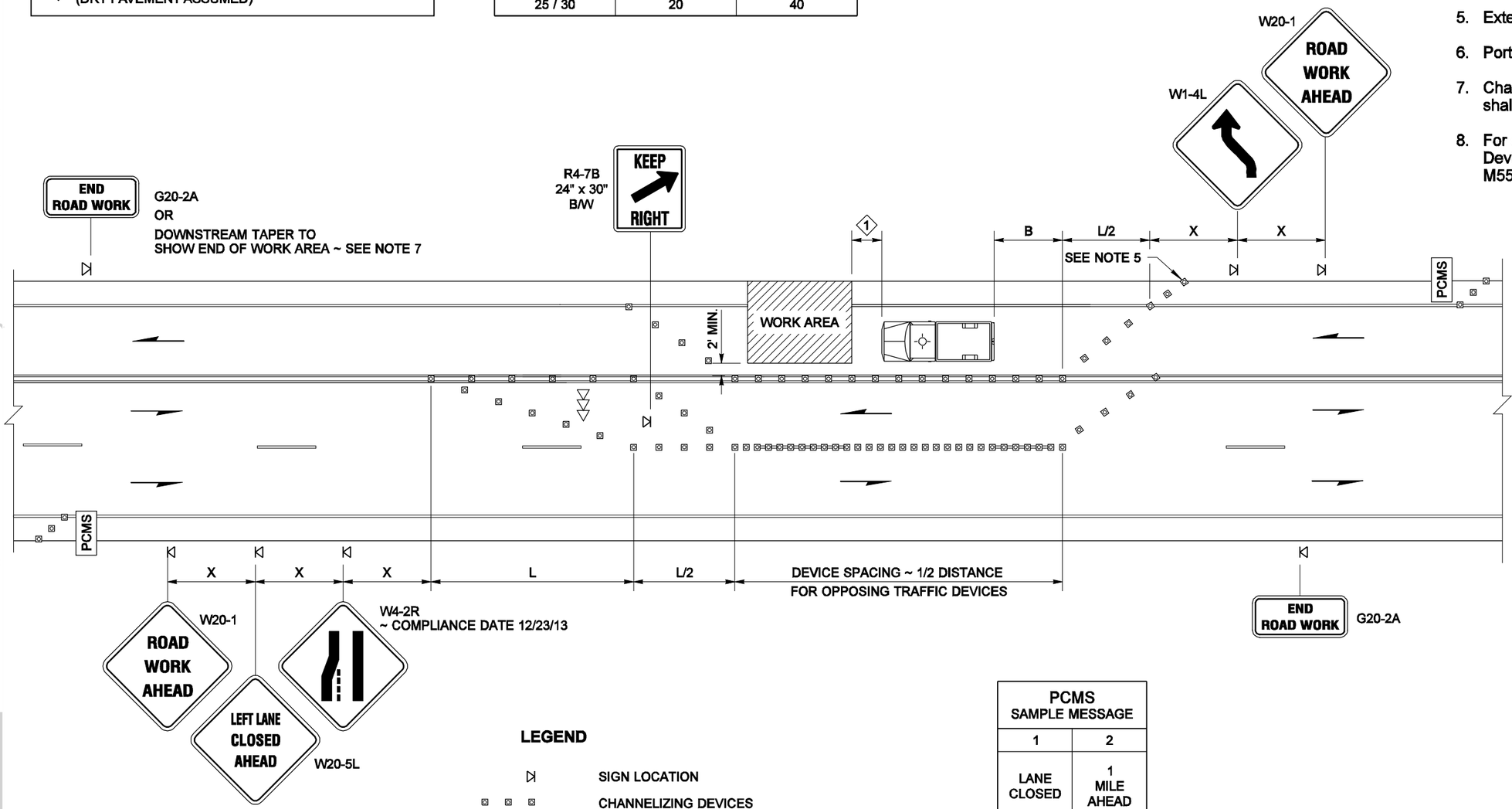

LEGEND

- SIGN LOCATION
- CHANNELIZING DEVICES
- PROTECTIVE VEHICLE ~ RECOMMENDED
- PCMS — PORTABLE CHANGEABLE MESSAGE SIGN
- ARROW PANEL

PCMS SAMPLE MESSAGE	
1	2
LANE CLOSED	1 MILE AHEAD
1.5 SEC	1.5 SEC

FIELD LOCATE 1 MILE ±, IN ADVANCE OF LANE CLOSURE

FOR LOCAL AGENCY USE ONLY
NOT FOR USE ON STATE ROUTES

THEODORE J. TREPANIER — STATE OF WASHINGTON — 25335 — REGISTERED PROFESSIONAL ENGINEER

EXPIRES AUGUST 9, 2007

NOTE: THIS PLAN IS NOT A LEGAL ENGINEERING DOCUMENT BUT AN ELECTRONIC DUPLICATE. THE ORIGINAL, SIGNED BY THE ENGINEER AND APPROVED FOR PUBLICATION, IS KEPT ON FILE AT THE WASHINGTON STATE DEPARTMENT OF TRANSPORTATION. A COPY MAY BE OBTAINED UPON REQUEST.

LANE SHIFT ONTO PASSING LANE

STANDARD PLAN K-22.20-00

SHEET 1 OF 1 SHEET

APPROVED FOR PUBLICATION

Ken L. Smith — STATE DESIGN ENGINEER — *02-15-07* — DATE

Washington State Department of Transportation

EFFECTIVE: APRIL 2, 2007 TO JANUARY 6, 2008

EFFECTIVE: APRIL 2, 2007 TO JANUARY 6, 2008

DRAWN BY: ELENA BRUNSTEIN

LONGITUDINAL BUFFER SPACE = B								
POSTED SPEED (MPH)	25	30	35	40	45	50	55	60
LENGTH **B** (FEET)	155	200	250	305	360	425	495	570

BUFFER DATA	
TYPICAL PROTECTIVE VEHICLE WITH TMA (SEE NOTE 1)	
VEHICLE TYPE	**LOADED WEIGHT**
4 YARD DUMP TRUCK, SERVICE TRUCK, FLAT BED, ETC.	MINIMUM WEIGHT 15,000 LBS. (MAXIMUM WEIGHT SHALL BE IN ACCORDANCE WITH MANUFACTURER RECOMMENDATION)
① **ROLL AHEAD STOPPING DISTANCE** = 30 FEET MIN. (DRY PAVEMENT ASSUMED)	

MINIMUM TAPER LENGTH = L (FEET)										
LANE WIDTH (FEET)	POSTED SPEED (MPH)									
	25	30	35	40	45	50	55	60	65	70
10	105	150	205	270	450	500	550	-	-	-
11	115	165	225	294	495	550	605	660	-	-
12	125	180	245	320	540	600	660	720	780	840

CHANNELIZING DEVICE SPACING		
POSTED SPEED (MPH)	IN TAPER (FEET)	IN TANGENT (FEET)
50 / 70	40	80
35 / 45	30	60
25 / 30	20	40

SIGN SPACING = X (1)		
RURAL HIGHWAYS	60 / 65 MPH	800' ±
RURAL ROADS	45 / 55 MPH	500' ±
RURAL ROADS & URBAN ARTERIALS	35 / 40 MPH	350' ±
RURAL ROADS, URBAN ARTERIALS, RESIDENTIAL & BUSINESS DISTRICTS	25 / 30 MPH	200' ± (2)
URBAN STREETS	25 MPH OR LESS	100' ± (2)
ALL SIGNS ARE BLACK ON ORANGE UNLESS DESIGNATED OTHERWISE		

(1) ALL SIGN SPACING MAY BE ADJUSTED TO ACCOMMODATE AT-GRADE INTERSECTIONS, AND DRIVEWAYS.

(2) THIS SIGN SPACING MAY BE REDUCED IN URBAN AREAS TO FIT ROADWAY CONDITIONS.

NOTES

1. A Protective Vehicle is recommended regardless if a Truck Mounted Attenuator (TMA) is available; a work vehicle may be used. When no TMA is used, the Protective Vehicle shall be strategically located to shield workers, with no specific Roll-Ahead Stopping Distance.
2. Extend device taper (L/3) across shoulder ~ recommended.
3. Portable Changeable Message Sign (PCMS) ~ recommended.
4. Traffic Safety Drums for all tapers on high speed roadway ~ recommended.
5. Transverse Devices in closed lane every 1000' ± ~ recommended.
6. Channelizing Device spacing for the downstream taper option shall be 20' O.C.
7. Use advanced notice for any overwidth loads prior to lane closure for altenative routes if applicable ~ recommended.
8. For signs size refer to Manual on Uniform Traffic Control Devices (MUTCD) and WSDOT Sign Fabrication Manual M55-05.

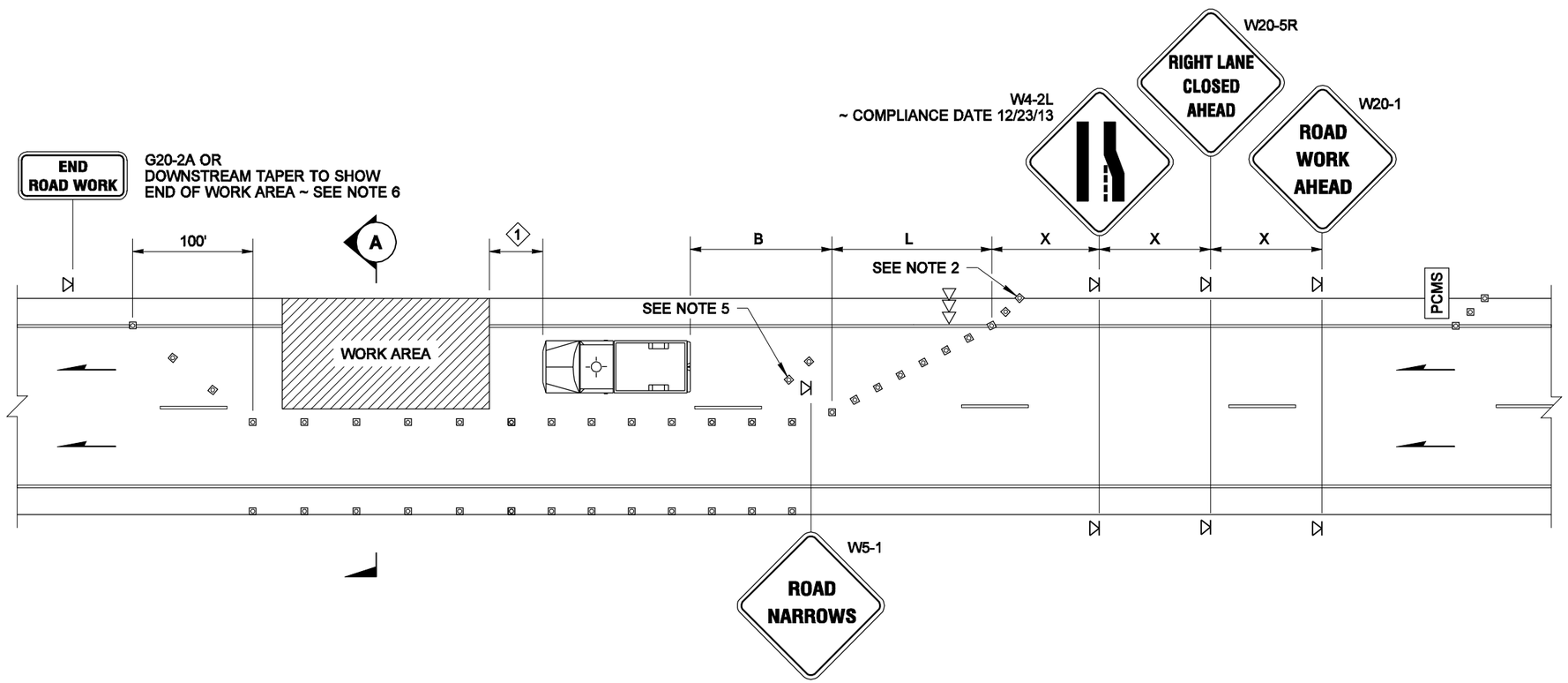

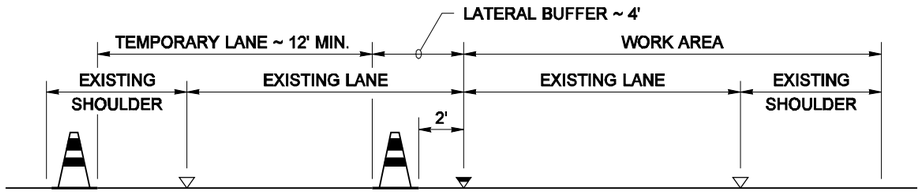

SECTION (A)

LEGEND

▷	SIGN LOCATION
▫ ▫ ▫	CHANNELIZING DEVICES
	PROTECTIVE VEHICLE ~ RECOMMENDED
PCMS	PORTABLE CHANGEABLE MESSAGE SIGN
▷▷▷	ARROW PANEL
▽	EXISTING EDGE STRIPE
▼	EXISTING LANE STRIPE
	TEMPORARY TRAFFIC CONTROL DEVICE

FOR LOCAL AGENCY USE ONLY
NOT FOR USE ON STATE ROUTES

THEODORE J. TREPANIER — STATE OF WASHINGTON — 25335 — REGISTERED PROFESSIONAL ENGINEER

EXPIRES AUGUST 9, 2007

NOTE: THIS PLAN IS NOT A LEGAL ENGINEERING DOCUMENT BUT AN ELECTRONIC DUPLICATE. THE ORIGINAL, SIGNED BY THE ENGINEER AND APPROVED FOR PUBLICATION, IS KEPT ON FILE AT THE WASHINGTON STATE DEPARTMENT OF TRANSPORTATION. A COPY MAY BE OBTAINED UPON REQUEST.

SINGLE LANE CLOSURE WITH ENCROACHMENT

STANDARD PLAN K-24.20-00

SHEET 1 OF 1 SHEET

APPROVED FOR PUBLICATION

Ken L. Smith — STATE DESIGN ENGINEER — *02-15-07* — DATE

Washington State Department of Transportation

EFFECTIVE: APRIL 2, 2007 TO JANUARY 6, 2008

EFFECTIVE: APRIL 2, 2007 TO JANUARY 6, 2008

DRAWN BY: ELENA BRUNSTEIN

LONGITUDINAL BUFFER SPACE = B								
POSTED SPEED (MPH)	25	30	35	40	45	50	55	60
LENGTH **B** (FEET)	155	200	250	305	360	425	495	570

BUFFER DATA	
TYPICAL PROTECTIVE VEHICLE WITH TMA (SEE NOTE 1)	
VEHICLE TYPE	**LOADED WEIGHT**
4 YARD DUMP TRUCK, SERVICE TRUCK, FLAT BED, ETC.	MINIMUM WEIGHT 15,000 LBS. (MAXIMUM WEIGHT SHALL BE IN ACCORDANCE WITH MANUFACTURER RECOMMENDATION)
◇1 **ROLL AHEAD STOPPING DISTANCE** = 30 FEET MIN. (DRY PAVEMENT ASSUMED)	

MINIMUM TAPER LENGTH = L (FEET)								
LANE WIDTH (FEET)	POSTED SPEED (MPH) 25	30	35	40	45	50	55	60
10	-	-	-	270	450	500	550	-
11	-	-	-	294	495	550	605	660
12	-	-	-	320	540	600	660	720

SIGN SPACING = X (1)		
RURAL HIGHWAYS	60 / 65 MPH	800' ±
RURAL ROADS	45 / 55 MPH	500' ±
RURAL ROADS & URBAN ARTERIALS	35 / 40 MPH	350' ±
RURAL ROADS, URBAN ARTERIALS, RESIDENTIAL & BUSINESS DISTRICTS	25 / 30 MPH	200' ± (2)
URBAN STREETS	25 MPH OR LESS	100' ± (2)
ALL SIGNS ARE BLACK ON ORANGE UNLESS DESIGNATED OTHERWISE		

(1) ALL SIGN SPACING MAY BE ADJUSTED TO ACCOMMODATE INTERCHANGE RAMPS, AT-GRADE INTERSECTIONS, AND DRIVEWAYS.

(2) THIS SIGN SPACING MAY BE REDUCED IN URBAN AREAS TO FIT ROADWAY CONDITIONS.

CHANNELIZING DEVICE SPACING		
POSTED SPEED (MPH)	IN TAPER (FEET)	IN TANGENT (FEET)
50 / 70	40	80
40 / 45	30	60

PCMS SAMPLE MESSAGE	
1	2
2 LANES CLOSED	ONE MILE AHEAD
1.5 SEC	1.5 SEC

FIELD LOCATE 1 MILE ±, IN ADVANCE OF LANE CLOSURE

LEGEND

- SIGN LOCATION
- CHANNELIZING DEVICES
- PROTECTIVE VEHICLE ~ RECOMMENDED
- PCMS — PORTABLE CHANGEABLE MESSAGE SIGN
- ARROW PANEL

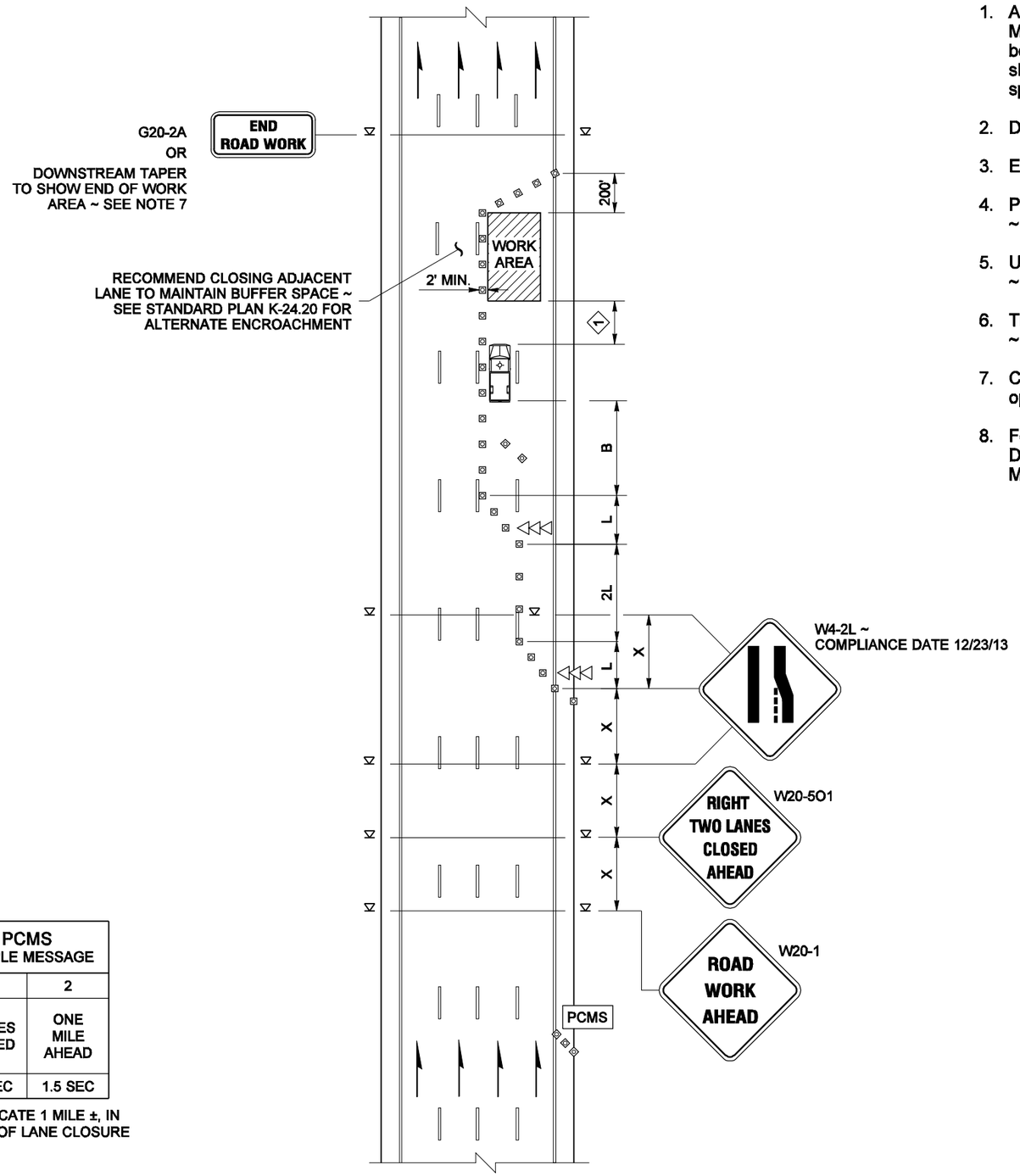

NOTES

1. A Protective Vehicle is recommended regardless if a Truck Mounted Attenuator (TMA) is available; a work vehicle may be used. When no TMA is used, the Protective Vehicle shall be strategically located to shield workers, with no specific Roll-Ahead distance.
2. Devices shall not encroach into adjacent lanes.
3. Extend device taper (L/3) across shoulder ~ recommended.
4. Portable Changeable Message Sign (PCMS) ~ recommended.
5. Use Transverse Devices in closed lane every 1000' ± ~ recommended.
6. Traffic Safety Drums for all tapers on high speed roadway ~ recommended.
7. Channelizing Device spacing for the downstream taper option shall be 20' O.C.
8. For signs size refer to Manual on Uniform Traffic Control Devices (MUTCD) and WSDOT Sign Fabrication Manual M55-05.

FOR LOCAL AGENCY USE ONLY
NOT FOR USE ON STATE ROUTES

THEODORE J. TREPANIER — STATE OF WASHINGTON — 25335 — REGISTERED PROFESSIONAL ENGINEER

EXPIRES AUGUST 9, 2007

NOTE: THIS PLAN IS NOT A LEGAL ENGINEERING DOCUMENT BUT AN ELECTRONIC DUPLICATE. THE ORIGINAL, SIGNED BY THE ENGINEER, AND APPROVED FOR PUBLICATION, IS KEPT ON FILE AT THE WASHINGTON STATE DEPARTMENT OF TRANSPORTATION. A COPY MAY BE OBTAINED UPON REQUEST.

DOUBLE LANE CLOSURE ON MULTILANE ROADWAY

STANDARD PLAN K-24.40-00

SHEET 1 OF 1 SHEET

APPROVED FOR PUBLICATION

Ken L. Smith — STATE DESIGN ENGINEER — *02-15-07* — DATE

Washington State Department of Transportation

EFFECTIVE: APRIL 2, 2007 TO JANUARY 6, 2008

EFFECTIVE: APRIL 2, 2007 TO JANUARY 6, 2008

EFFECTIVE: APRIL 2, 2007 TO JANUARY 6, 2008

DRAWN BY: ELENA BRUNSTEIN

LONGITUDINAL BUFFER SPACE = B								
POSTED SPEED (MPH)	25	30	35	40	45	50	55	60
LENGTH **B** (FEET)	155	200	250	305	360	425	495	570

BUFFER DATA	
TYPICAL PROTECTIVE VEHICLE WITH TMA (SEE NOTE 1)	
VEHICLE TYPE	**LOADED WEIGHT**
4 YARD DUMP TRUCK, SERVICE TRUCK, FLAT BED, ETC.	MINIMUM WEIGHT 15,000 LBS. (MAXIMUM WEIGHT SHALL BE IN ACCORDANCE WITH MANUFACTURER RECOMMENDATION)
① **ROLL AHEAD STOPPING DISTANCE** = 30 FEET MIN. (DRY PAVEMENT ASSUMED)	

MINIMUM TAPER LENGTH = L (FEET)								
LANE WIDTH (FEET)	POSTED SPEED (MPH)							
	25	30	35	40	45	50	55	60
10	105	150	205	270	450	500	550	-
11	115	165	225	294	495	550	605	660
12	125	180	245	320	540	600	660	720

CHANNELIZING DEVICE SPACING		
POSTED SPEED (MPH)	IN TAPER (FEET)	IN TANGENT (FEET)
50 / 70	40	80
35 / 45	30	60
25 / 30	20	40

SIGN SPACING = X (1)		
RURAL HIGHWAYS	60 / 65 MPH	800' ±
RURAL ROADS	45 / 55 MPH	500' ±
RURAL ROADS & URBAN ARTERIALS	35 / 40 MPH	350' ±
RURAL ROADS, URBAN ARTERIALS, RESIDENTIAL & BUSINESS DISTRICTS	25 / 30 MPH	200' ± (2)
URBAN STREETS	25 MPH OR LESS	100' ± (2)
ALL SIGNS ARE BLACK ON ORANGE UNLESS DESIGNATED OTHERWISE		

(1) ALL SIGN SPACING MAY BE ADJUSTED TO ACCOMMODATE INTERCHANGE RAMPS, AT-GRADE INTERSECTIONS, AND DRIVEWAYS.

(2) THIS SIGN SPACING MAY BE REDUCED IN URBAN AREAS TO FIT ROADWAY CONDITIONS.

NOTES

1. A Protective Vehicle is recommended regardless if a Truck Mounted Attenuator (TMA) is available; a work vehicle may be used. When no TMA is used, the Protective Vehicle shall be strategically located to shield workers, with no specific Roll-Ahead distance.
2. Devices shall not encroach into adjacent lanes.
3. Extend device taper (L/3) across shoulder ~ recommended.
4. Portable Changeable Message Sign (PCMS) ~ recommended.
5. Use Transverse Devices in closed lane every 1000' ± ~ recommended.
6. Traffic Safety Drums for all tapers on high speed roadway ~ recommended.
7. Channelizing Device spacing for the downstream taper option shall be 20' O.C.
8. For signs size refer to Manual on Uniform Traffic Control Devices (MUTCD) and WSDOT Sign Fabrication Manual M55-05.

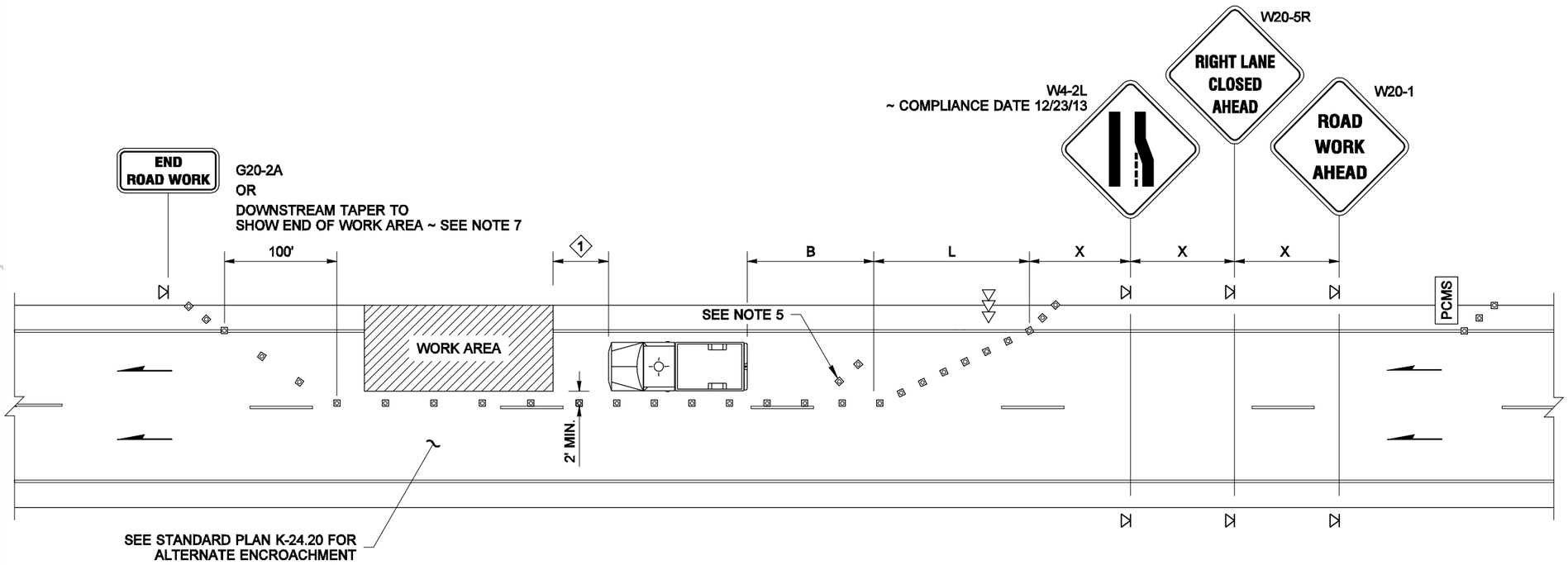

LEGEND

- SIGN LOCATION
- CHANNELIZING DEVICES
- PROTECTIVE VEHICLE ~ RECOMMENDED
- PCMS — PORTABLE CHANGEABLE MESSAGE SIGN
- ARROW PANEL

PCMS SAMPLE MESSAGE	
1	2
LANE CLOSED	ONE MILE AHEAD
1.5 SEC	1.5 SEC

FIELD LOCATE 1 MILE ±, IN ADVANCE OF LANE CLOSURE

FOR LOCAL AGENCY USE ONLY
NOT FOR USE ON STATE ROUTES

THEODORE J. TREPANIER — STATE OF WASHINGTON — 25335 — REGISTERED PROFESSIONAL ENGINEER

EXPIRES AUGUST 9, 2007

NOTE: THIS PLAN IS NOT A LEGAL ENGINEERING DOCUMENT BUT AN ELECTRONIC DUPLICATE. THE ORIGINAL, SIGNED BY THE ENGINEER, AND APPROVED FOR PUBLICATION, IS KEPT ON FILE AT THE WASHINGTON STATE DEPARTMENT OF TRANSPORTATION. A COPY MAY BE OBTAINED UPON REQUEST.

SINGLE LANE CLOSURE ON MULTILANE ROADWAY

STANDARD PLAN K-24.60-00

SHEET 1 OF 1 SHEET

APPROVED FOR PUBLICATION

Ken L. Smith — STATE DESIGN ENGINEER — *02-15-07* — DATE

Washington State Department of Transportation

EFFECTIVE: APRIL 2, 2007 TO JANUARY 6, 2008

EFFECTIVE: APRIL 2, 2007 TO JANUARY 6, 2008

EFFECTIVE: APRIL 2, 2007 TO JANUARY 6, 2008

EFFECTIVE: APRIL 2, 2007 TO JANUARY 6, 2008

DRAWN BY: ELENA BRUNSTEIN

LONGITUDINAL BUFFER SPACE = B										
POSTED SPEED (MPH)	25	30	35	40	45	50	55	60	65	70
LENGTH **B** (FEET)	155	200	250	305	360	425	495	570	645	730

SIGN SPACING = X (1)		
RURAL HIGHWAYS	60 / 65 MPH	800' ±
RURAL ROADS	45 / 55 MPH	500' ±
RURAL ROADS & URBAN ARTERIALS	35 / 40 MPH	350' ±
RURAL ROADS, URBAN ARTERIALS, RESIDENTIAL & BUSINESS DISTRICTS	25 / 30 MPH	200' ± (2)
URBAN STREETS	25 MPH OR LESS	100' ± (2)
ALL SIGNS ARE BLACK ON ORANGE UNLESS DESIGNATED OTHERWISE		

(1) ALL SIGN SPACING MAY BE ADJUSTED TO ACCOMMODATE INTERCHANGE RAMPS, AT-GRADE INTERSECTIONS, AND DRIVEWAYS.

(2) THIS SIGN SPACING MAY BE REDUCED IN URBAN AREAS TO FIT ROADWAY CONDITIONS.

MINIMUM TAPER LENGTH = L (FEET)										
LANE WIDTH (FEET)	POSTED SPEED (MPH)									
	25	30	35	40	45	50	55	60	65	70
10	105	150	205	270	450	500	550	-	-	-
11	115	165	225	294	495	550	605	660	-	-
12	125	180	245	320	540	600	660	720	780	840

CHANNELIZING DEVICE SPACING		
POSTED SPEED (MPH)	IN TAPER (FEET)	IN TANGENT (FEET)
50 / 65	40	80
35 / 45	30	60
25 / 30	20	40

LEGEND

- SIGN LOCATION
- CHANNELIZING DEVICES
- TEMPORARY CONCRETE BARRIER WITH REFLECTORS
- PCMS — PORTABLE CHANGEABLE MESSAGE SIGN
- ARROW PANEL
- TRAFFIC SAFETY DRUM
- TEMPORARY IMPACT ATTENUATOR

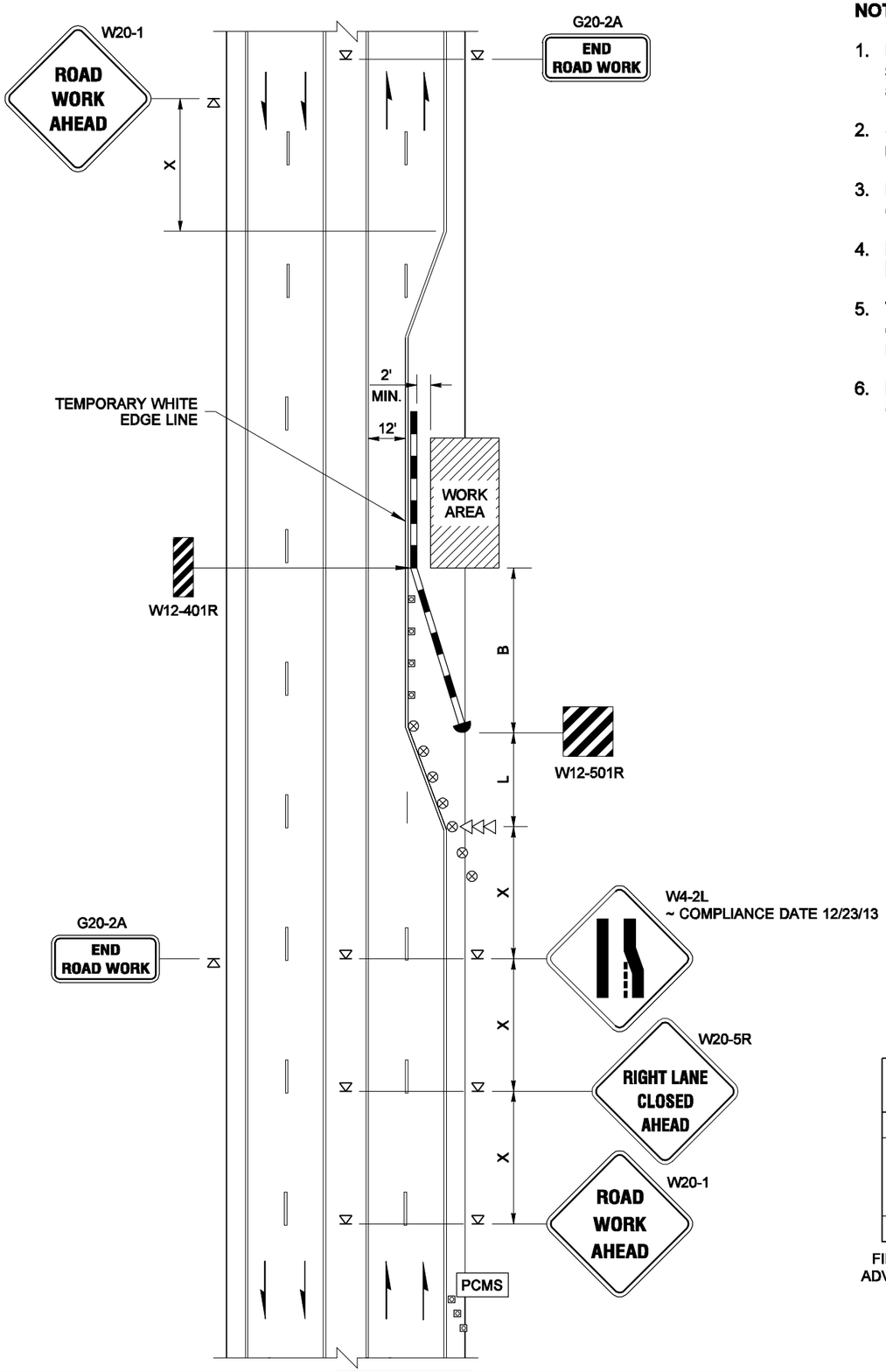

NOTES

1. Existing conflicting pavement markings that are no longer applicable shall be removed or obliterated. Temporary markings shall be used as necessary.
2. Steady-Burn Warning Lights (Type C, MUTCD) shall be used to mark Channelizing Devices at night.
3. Exposed ends of Concrete Barriers shall be tapered outside the clear zone or fitted with impact attenuators.
4. Roadside Barrier and End Treatment shall be crashworthy. Refer to Design Manual, Chapter 710 & 720, for barrier and attenuator information.
5. Temporary concrete barrier may be Type 2 (see Standard Plan C-8) or Alternative (see Standard Plan K-80.30). Anchoring may be required (see Standard Plans K-80.35 and K-80.37).
6. For signs size refer to Manual on Uniform Traffic Control Devices (MUTCD) and WSDOT Sign Fabrication Manual M55-05.

LONGITUDINAL BARRIER FLARE RATES		
POSTED SPEED (MPH)	ANCHORED BARRIER	UNANCHORED BARRIER
60	18 : 1	16 : 1
55	16 : 1	14 : 1
50	14 : 1	12 : 1
45	12 : 1	11 : 1
40 OR BELOW	11 : 1	10 : 1

PCMS SAMPLE MESSAGE	
1	2
RIGHT LANE CLOSED	ONE MILE AHEAD
1.5 SEC	1.5 SEC

FIELD LOCATE 1 MILE ±, IN ADVANCE OF LANE CLOSURE

FOR LOCAL AGENCY USE ONLY
NOT FOR USE ON STATE ROUTES

THEODORE J. TREPANIER — STATE OF WASHINGTON — 25335 — REGISTERED PROFESSIONAL ENGINEER

EXPIRES AUGUST 9, 2007

NOTE: THIS PLAN IS NOT A LEGAL ENGINEERING DOCUMENT BUT AN ELECTRONIC DUPLICATE. THE ORIGINAL, SIGNED BY THE ENGINEER AND APPROVED FOR PUBLICATION, IS KEPT ON FILE AT THE WASHINGTON STATE DEPARTMENT OF TRANSPORTATION. A COPY MAY BE OBTAINED UPON REQUEST.

SINGLE LANE CLOSURE WITH TEMPORARY CONCRETE BARRIER STANDARD PLAN K-24.80-00

SHEET 1 OF 1 SHEET

APPROVED FOR PUBLICATION

Ken L. Smith — STATE DESIGN ENGINEER — *02-15-07* — DATE

Washington State Department of Transportation

EFFECTIVE: APRIL 2, 2007 TO JANUARY 6, 2008

EFFECTIVE: APRIL 2, 2007 TO JANUARY 6, 2008

EFFECTIVE: APRIL 2, 2007 TO JANUARY 6, 2008

DRAWN BY: ELENA BRUNSTEIN

LONGITUDINAL BUFFER SPACE = B						
POSTED SPEED (MPH)	25	30	35	40	45	50
LENGTH **B** (FEET)	155	200	250	305	360	425

BUFFER DATA	
TYPICAL PROTECTIVE VEHICLE WITH TMA (SEE NOTE 1)	
VEHICLE TYPE	**LOADED WEIGHT**
4 YARD DUMP TRUCK, SERVICE TRUCK, FLAT BED, ETC.	MINIMUM WEIGHT 15,000 LBS. (MAXIMUM WEIGHT SHALL BE IN ACCORDANCE WITH MANU-FACTURER RECOMMENDATION)
① **ROLL AHEAD STOPPING DISTANCE** = 30 FEET MIN. (DRY PAVEMENT ASSUMED)	

SIGN SPACING = X		
RURAL ROADS	45 / 55 MPH	500' ±
RURAL ROADS & URBAN ARTERIALS	35 / 40 MPH	350' ±
RURAL ROADS, URBAN ARTERIALS, RESIDENTIAL & BUSINESS DISTRICTS	25 / 30 MPH	200' ±
ALL SIGNS ARE BLACK ON ORANGE UNLESS DESIGNATED OTHERWISE		

ALL SIGN SPACING MAY BE ADJUSTED TO ACCOMMODATE AT-GRADE INTERSECTIONS AND DRIVEWAYS.

MINIMUM TAPER LENGTH = L (FEET)						
LANE WIDTH (FEET)	POSTED SPEED (MPH) 25	30	35	40	45	50
10	105	150	205	270	450	500
11	115	165	225	294	495	550
12	125	180	245	320	540	600

CHANNELIZING DEVICE SPACING		
POSTED SPEED (MPH)	IN TAPER (FEET)	IN TANGENT (FEET)
50	40	80
35 / 45	30	60
25 / 30	20	40

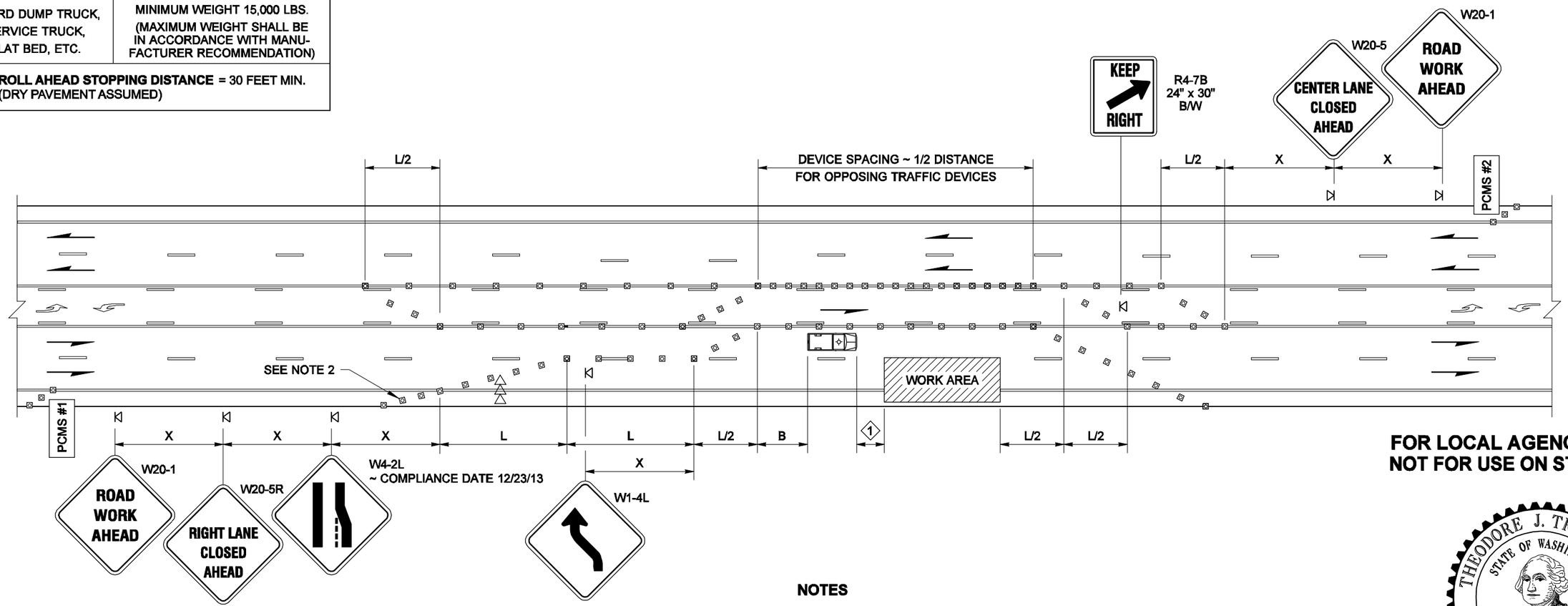

PCMS SAMPLE MESSAGE #1	
1	2
LANES CLOSED AHEAD	NO LEFT TURN
1.5 SEC	1.5 SEC

FIELD LOCATE IN ADVANCE OF LANE CLOSURE SIGNING

PCMS SAMPLE MESSAGE #2	
1	2
CENTER LANE CLOSED	NO LEFT TURN
1.5 SEC	1.5 SEC

FIELD LOCATE IN ADVANCE OF LANE CLOSURE SIGNING

LEGEND

- SIGN LOCATION
- CHANNELIZING DEVICES
- PROTECTIVE VEHICLE ~ RECOMMENDED
- PCMS — PORTABLE CHANGEABLE MESSAGE SIGN
- ARROW PANEL

NOTES

1. A Protective Vehicle is recommended regardless if a Truck Mounted Attenuator (TMA) is available; a work vehicle may be used. When no TMA is used, the Protective Vehicle shall be strategically located to shield workers, with no specific Roll-Ahead distance.
2. Extend device taper (L/3) across shoulder ~ recommended.
3. Portable Changeable Message Sign (PCMS) ~ recommended.
4. If the lane shift is short and has minimal radius curve (30mph or less) use sign W1-3 in lieu of sign W1-4.
5. For signs size refer to Manual on Uniform Traffic Control Devices (MUTCD) and WSDOT Sign Fabrication Manual M55-05.

FOR LOCAL AGENCY USE ONLY
NOT FOR USE ON STATE ROUTES

THEODORE J. TREPANIER — STATE OF WASHINGTON — 25335 — REGISTERED PROFESSIONAL ENGINEER

EXPIRES AUGUST 9, 2007

NOTE: THIS PLAN IS NOT A LEGAL ENGINEERING DOCUMENT BUT AN ELECTRONIC DUPLICATE. THE ORIGINAL, SIGNED BY THE ENGINEER AND APPROVED FOR PUBLICATION, IS KEPT ON FILE AT THE WASHINGTON STATE DEPARTMENT OF TRANSPORTATION. A COPY MAY BE OBTAINED UPON REQUEST.

LANE SHIFT ONTO TWO-WAY LEFT TURN LANE

STANDARD PLAN K-26.20-00

SHEET 1 OF 1 SHEET

APPROVED FOR PUBLICATION

Ken L. Smith — STATE DESIGN ENGINEER — *02-15-07* — DATE

Washington State Department of Transportation

EFFECTIVE: APRIL 2, 2007 TO JANUARY 6, 2008

EFFECTIVE: APRIL 2, 2007 TO JANUARY 6, 2008

LONGITUDINAL BUFFER SPACE = B						
POSTED SPEED (MPH)	25	30	35	40	45	50
LENGTH **B** (FEET)	155	200	250	305	360	425

BUFFER DATA	
TYPICAL PROTECTIVE VEHICLE WITH TMA (SEE NOTE 1)	
VEHICLE TYPE	**LOADED WEIGHT**
4 YARD DUMP TRUCK, SERVICE TRUCK, FLAT BED, ETC.	MINIMUM WEIGHT 15,000 LBS. (MAXIMUM WEIGHT SHALL BE IN ACCORDANCE WITH MANUFACTURER RECOMMENDATION)
① **ROLL AHEAD STOPPING DISTANCE** = 30 FEET MIN. (DRY PAVEMENT ASSUMED)	

SIGN SPACING = X		
RURAL ROADS	45 / 55 MPH	500' ±
RURAL ROADS & URBAN ARTERIALS	35 / 40 MPH	350' ±
RURAL ROADS, URBAN ARTERIALS, RESIDENTIAL & BUSINESS DISTRICTS	25 / 30 MPH	200' ±
ALL SIGNS ARE BLACK ON ORANGE UNLESS DESIGNATED OTHERWISE		

ALL SIGN SPACING MAY BE ADJUSTED TO ACCOMMODATE INTERCHANGE RAMPS, AT-GRADE INTERSECTIONS, AND DRIVEWAYS.

MINIMUM TAPER LENGTH = L (FEET)						
LANE WIDTH (FEET)	POSTED SPEED (MPH) 25	30	35	40	45	50
10	105	150	205	270	450	500
11	115	165	225	294	495	550
12	125	180	245	320	540	600

CHANNELIZING DEVICE SPACING		
POSTED SPEED (MPH)	IN TAPER (FEET)	IN TANGENT (FEET)
50	40	80
35 / 45	30	60
25 / 30	20	40

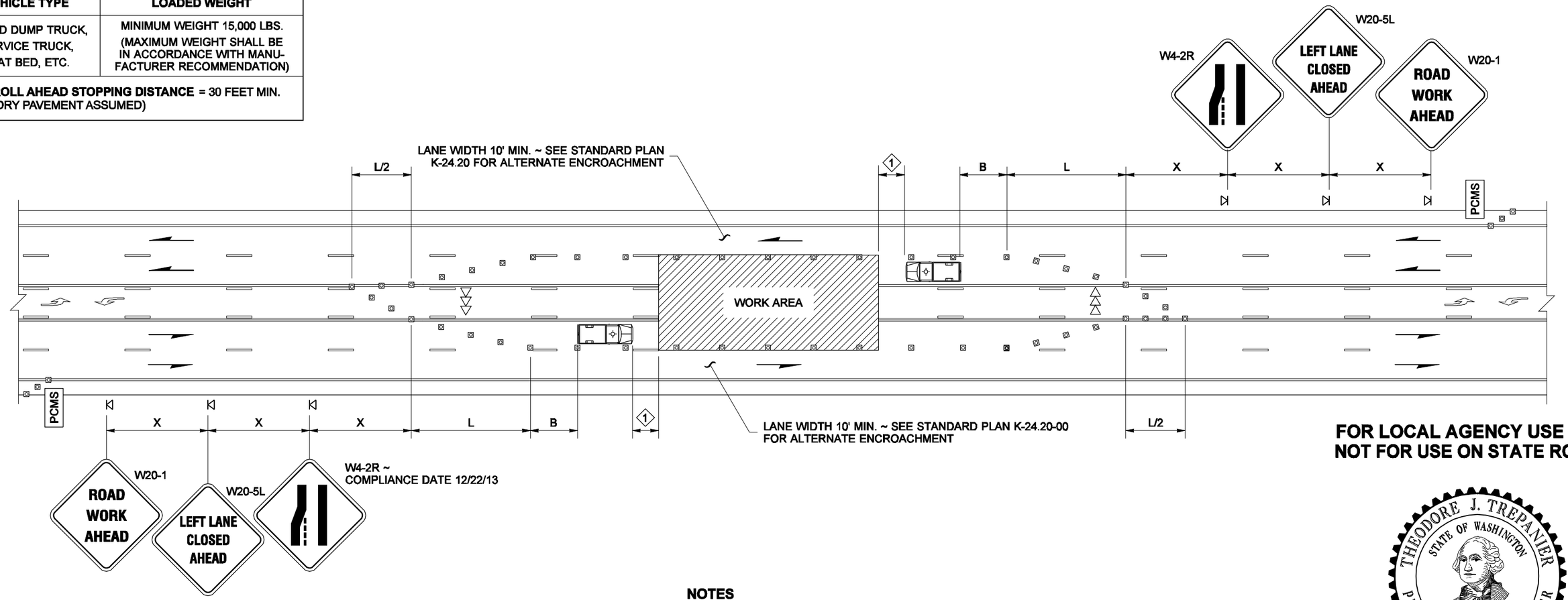

PCMS SAMPLE MESSAGE	
1	2
LEFT AND CENTER LANE CLOSED	NO LEFT TURN
1.5 SEC	1.5 SEC

FIELD LOCATE IN ADVANCE OF LANE CLOSURE SIGNING

LEGEND

- SIGN LOCATION
- CHANNELIZING DEVICES
- PROTECTIVE VEHICLE ~ RECOMMENDED
- PCMS — PORTABLE CHANGEABLE MESSAGE SIGN
- ARROW PANEL

NOTES

1. A Protective Vehicle is recommended regardless if a Truck Mounted Attenuator (TMA) is available; a work vehicle may be used. When no TMA is used, the Protective Vehicle shall be strategically located to shield workers, with no specific Roll-Ahead distance.
2. Portable Changeable Message Sign (PCMS) ~ recommended.
3. Prohibit turns as necessary for traffic conditions.
4. For signs size refer to Manual on Uniform Traffic Control Device (MUTCD) and WSDOT Sign Fabrication Manual M55-05.

FOR LOCAL AGENCY USE ONLY
NOT FOR USE ON STATE ROUTES

THEODORE J. TREPANIER — STATE OF WASHINGTON — 25335 — REGISTERED PROFESSIONAL ENGINEER

EXPIRES AUGUST 9, 2007

NOTE: THIS PLAN IS NOT A LEGAL ENGINEERING DOCUMENT BUT AN ELECTRONIC DUPLICATE. THE ORIGINAL, SIGNED BY THE ENGINEER AND APPROVED FOR PUBLICATION, IS KEPT ON FILE AT THE WASHINGTON STATE DEPARTMENT OF TRANSPORTATION. A COPY MAY BE OBTAINED UPON REQUEST.

LEFT AND CENTER LANE CLOSURE ~ TWO-WAY LEFT TURN LANE

STANDARD PLAN K-26.40-00

SHEET 1 OF 1 SHEET

APPROVED FOR PUBLICATION

Ken L. Smith — STATE DESIGN ENGINEER — *02-15-07* — DATE

Washington State Department of Transportation

DRAWN BY: ELENA BRUNSTEIN

EFFECTIVE: APRIL 2, 2007 TO JANUARY 6, 2008

EFFECTIVE: APRIL 2, 2007 TO JANUARY 6, 2008

DRAWN BY: ELENA BRUNSTEIN

LONGITUDINAL BUFFER SPACE = B								
POSTED SPEED (MPH)	25	30	35	40	45	50	55	60
LENGTH **B** (FEET)	155	200	250	305	360	425	495	570

SIGN SPACING = X (1)		
RURAL HIGHWAYS	60 / 65 MPH	800' ±
RURAL ROADS	45 / 55 MPH	500' ±
RURAL ROADS & URBAN ARTERIALS	35 / 40 MPH	350' ±
RURAL ROADS, URBAN ARTERIALS, RESIDENTIAL & BUSINESS DISTRICTS	25 / 30 MPH	200' ± (2)
URBAN STREETS	25 MPH OR LESS	100' ± (2)
ALL SIGNS ARE BLACK ON ORANGE UNLESS DESIGNATED OTHERWISE		

(1) ALL SIGN SPACING MAY BE ADJUSTED TO ACCOMMODATE AT-GRADE INTERSECTIONS AND DRIVEWAYS.

(2) THIS SIGN SPACING MAY BE REDUCED IN URBAN AREAS TO FIT ROADWAY CONDITIONS.

NOTES

1. A Protective Vehicle is recommended regardless if a Truck Mounted Attenuator (TMA) is available; a work vehicle may be used. When no TMA is used, the Protective Vehicle shall be strategically located to shield workers, with no specific Roll-Ahead distance.
2. If an existing signal is present, the signal shall be set to "red flash mode" or turned off during flagging operations.
3. Extend device taper (L/3) across shoulder ~ recommended.
4. Law enforcement officer may be used in lieu of flaggers to control intersection traffic.
5. For speed limit of 30 mph or less use sign W1-3 in lieu of sign W1-4.
6. Maintain a minimum of one access point for each business within the Work Area limits.
7. Portable Changeable Message Sign (PCMS) ~ recommended.
8. For signs size refer to Manual on Uniform Traffic Control Devices (MUTCD) and WSDOT Sign Fabrication Manual M55-05.

BUFFER DATA	
TYPICAL PROTECTIVE VEHICLE WITH TMA (SEE NOTE 1)	
VEHICLE TYPE	**LOADED WEIGHT**
4 YARD DUMP TRUCK, SERVICE TRUCK, FLAT BED, ETC.	MINIMUM WEIGHT 15,000 LBS. (MAXIMUM WEIGHT SHALL BE IN ACCORDANCE WITH MANUFACTURER RECOMMENDATION)
① **ROLL AHEAD STOPPING DISTANCE** = 30 FEET MIN. (DRY PAVEMENT ASSUMED)	

CHANNELIZING DEVICE SPACING		
POSTED SPEED (MPH)	IN TAPER (FEET)	IN TANGENT (FEET)
50 / 70	40	80
35 / 45	30	60
25 / 30	20	40

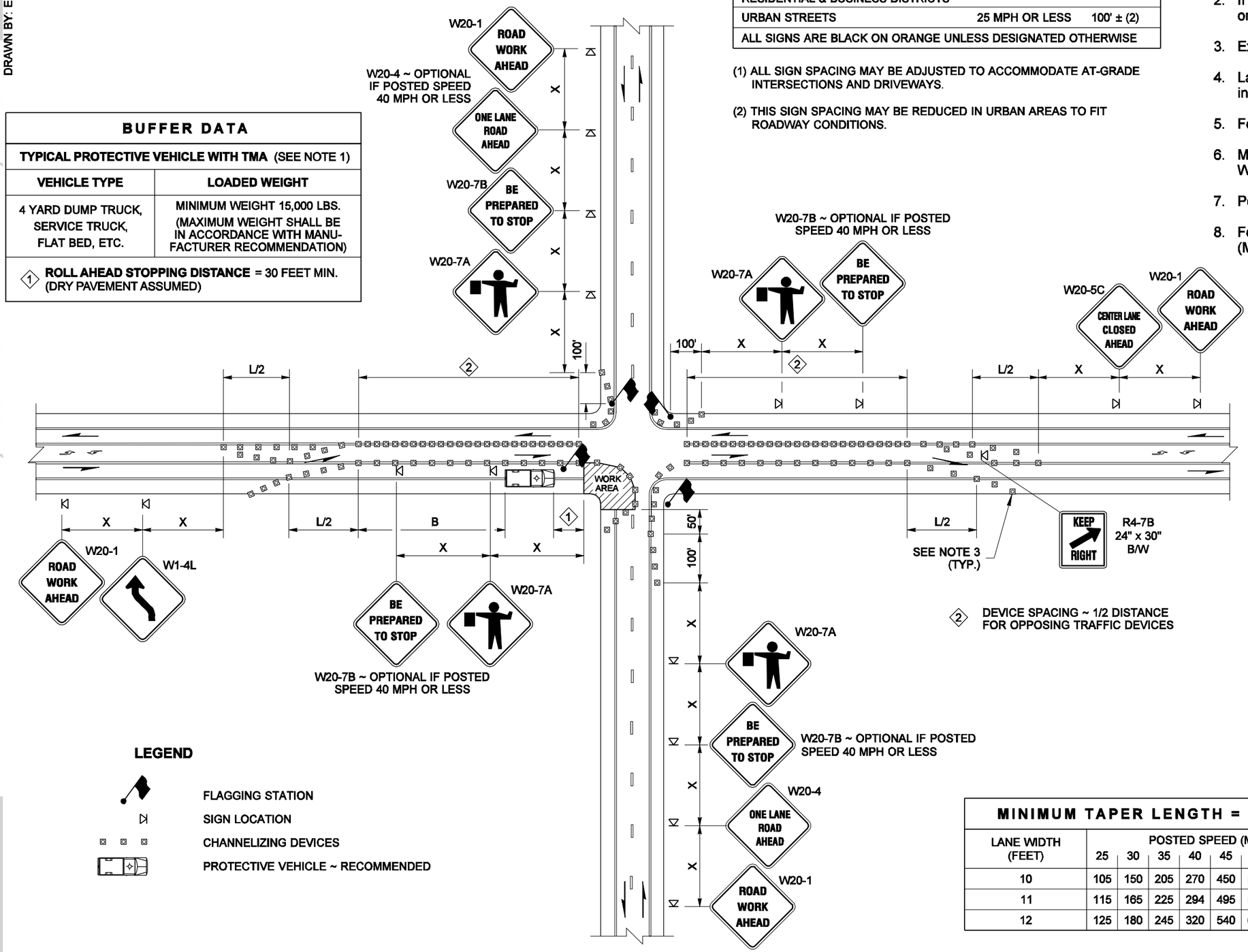

LEGEND

- FLAGGING STATION
- SIGN LOCATION
- CHANNELIZING DEVICES
- PROTECTIVE VEHICLE ~ RECOMMENDED

MINIMUM TAPER LENGTH = L (FEET)								
LANE WIDTH (FEET)	POSTED SPEED (MPH) 25	30	35	40	45	50	55	60
10	105	150	205	270	450	500	550	-
11	115	165	225	294	495	550	605	660
12	125	180	245	320	540	600	660	720

FOR LOCAL AGENCY USE ONLY
NOT FOR USE ON STATE ROUTES

THEODORE J. TREPANIER
STATE OF WASHINGTON
25335
REGISTERED
PROFESSIONAL ENGINEER

EXPIRES AUGUST 9, 2007

NOTE: THIS PLAN IS NOT A LEGAL ENGINEERING DOCUMENT BUT AN ELECTRONIC DUPLICATE. THE ORIGINAL, SIGNED BY THE ENGINEER AND APPROVED FOR PUBLICATION, IS KEPT ON FILE AT THE WASHINGTON STATE DEPARTMENT OF TRANSPORTATION. A COPY MAY BE OBTAINED UPON REQUEST.

INTERSECTION ~ LANE SHIFT ON THREE LANE TWO-WAY LEFT TURN LANE
STANDARD PLAN K-30.20-00

SHEET 1 OF 1 SHEET

APPROVED FOR PUBLICATION

Ken L. Smith — STATE DESIGN ENGINEER — *02-15-07* — DATE

Washington State Department of Transportation

EFFECTIVE: APRIL 2, 2007 TO JANUARY 6, 2008

EFFECTIVE: APRIL 2, 2007 TO JANUARY 6, 2008

EFFECTIVE: APRIL 2, 2007 TO JANUARY 6, 2008

DRAWN BY: ELENA BRUNSTEIN

LONGITUDINAL BUFFER SPACE = B									
POSTED SPEED (MPH)	25	30	35	40	45	50	55	60	65
LENGTH **B** (FEET)	155	200	250	305	360	425	495	570	645

BUFFER DATA	
TYPICAL PROTECTIVE VEHICLE WITH TMA (SEE NOTE 1)	
VEHICLE TYPE	**LOADED WEIGHT**
4 YARD DUMP TRUCK, SERVICE TRUCK, FLAT BED, ETC.	MINIMUM WEIGHT 15,000 LBS. (MAXIMUM WEIGHT SHALL BE IN ACCORDANCE WITH MANUFACTURER RECOMMENDATION)
① **ROLL AHEAD STOPPING DISTANCE** = 30 FEET MIN. (DRY PAVEMENT ASSUMED)	

MINIMUM TAPER LENGTH = L (FEET)									
LANE WIDTH (FEET)	POSTED SPEED (MPH)								
	25	30	35	40	45	50	55	60	65
10	105	150	205	270	450	500	550	-	-
11	115	165	225	294	495	550	605	660	-
12	125	180	245	320	540	600	660	720	780

CHANNELIZING DEVICE SPACING		
POSTED SPEED (MPH)	IN TAPER (FEET)	IN TANGENT (FEET)
50 / 70	40	80
35 / 45	30	60
25 / 30	20	40

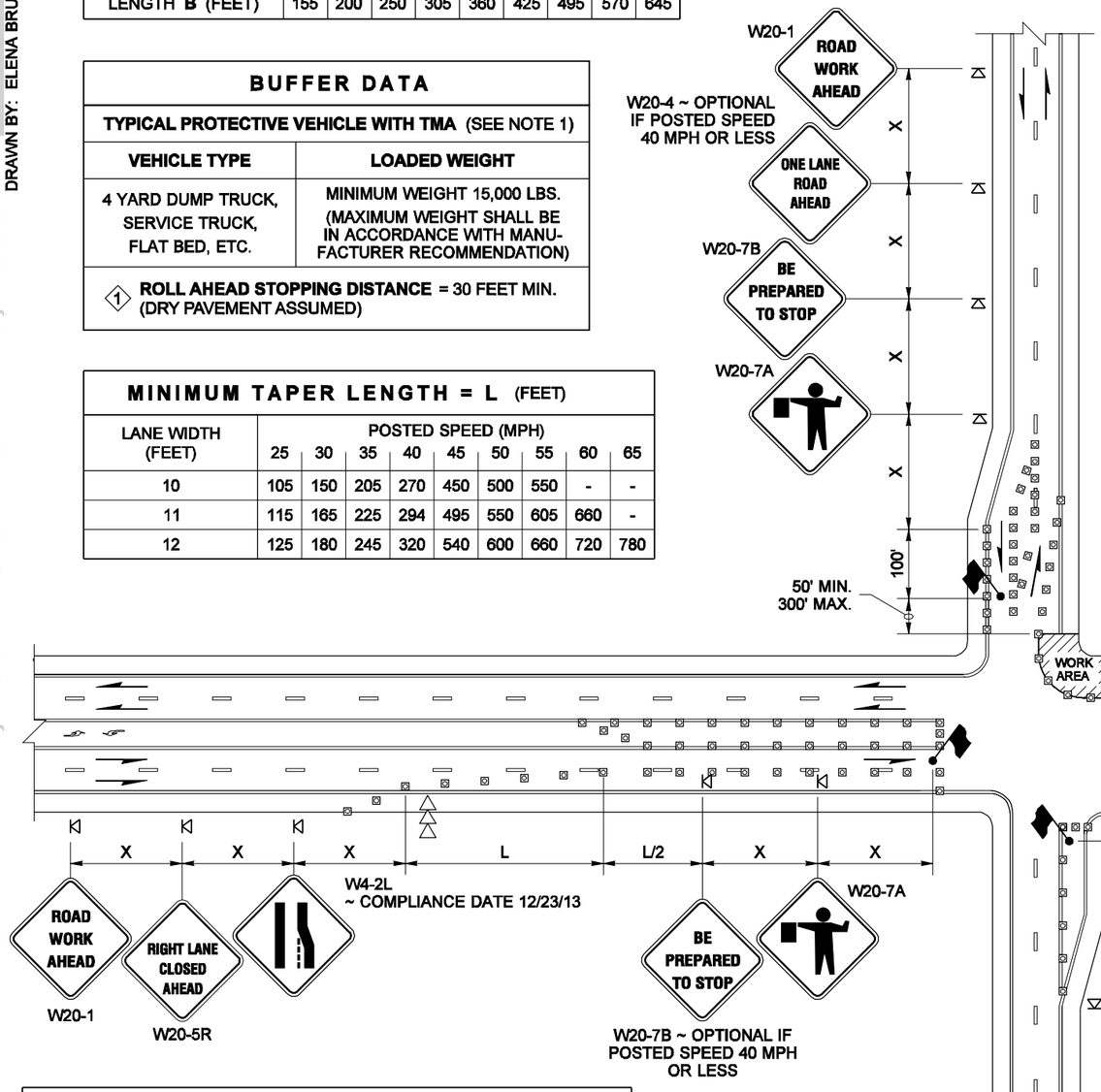

NOTES

1. A Protective Vehicle is recommended regardless if a Truck Mounted Attenuator (TMA) is available; a work vehicle may be used. When no TMA is used, the Protective Vehicle shall be strategically located to shield workers, with no specific Roll-Ahead distance.
2. If an existing signal is present, the signal shall be set to "red flash mode" or turned off during flagging operations.
3. Extend device taper (L/3) across shoulder ~ recommended.
4. Law enforcement officer may be used in lieu of flaggers to control intersection traffic.
5. Closing lane in advance of flagging location when multiple lanes are on approach leg ~ recommended.
6. Maintain a minimum of one access point for each business within the Work Area limits.
7. Portable Changeable Message Sign (PCMS) ~ recommended.
8. For signs size refer to Manual on Uniform Traffic Control Devices (MUTCD) and WSDOT Sign Fabrication Manual M55-05.

SIGN SPACING = X (1)		
RURAL HIGHWAYS	60 / 65 MPH	800' ±
RURAL ROADS	45 / 55 MPH	500' ±
RURAL ROADS & URBAN ARTERIALS	35 / 40 MPH	350' ±
RURAL ROADS, URBAN ARTERIALS, RESIDENTIAL & BUSINESS DISTRICTS	25 / 30 MPH	200' ± (2)
URBAN STREETS	25 MPH OR LESS	100' ± (2)
ALL SIGNS ARE BLACK ON ORANGE UNLESS DESIGNATED OTHERWISE		

(1) ALL SIGN SPACING MAY BE ADJUSTED TO ACCOMMODATE AT-GRADE INTERSECTIONS AND DRIVEWAYS.

(2) THIS SIGN SPACING MAY BE REDUCED IN URBAN AREAS TO FIT ROADWAY CONDITIONS.

LEGEND

- FLAGGING STATION
- SIGN LOCATION
- CHANNELIZING DEVICES
- PROTECTIVE VEHICLE ~ RECOMMENDED
- ARROW PANEL

FOR LOCAL AGENCY USE ONLY
NOT FOR USE ON STATE ROUTES

THEODORE J. TREPANIER
STATE OF WASHINGTON
25335
REGISTERED
PROFESSIONAL ENGINEER

EXPIRES AUGUST 9, 2007

NOTE: THIS PLAN IS NOT A LEGAL ENGINEERING DOCUMENT BUT AN ELECTRONIC DUPLICATE. THE ORIGINAL, SIGNED BY THE ENGINEER AND APPROVED FOR PUBLICATION, IS KEPT ON FILE AT THE WASHINGTON STATE DEPARTMENT OF TRANSPORTATION. A COPY MAY BE OBTAINED UPON REQUEST.

INTERSECTION ~ LANE SHIFT ON FIVE LANE TWO-WAY LEFT TURN LANE
STANDARD PLAN K-30.40-00

SHEET 1 OF 1 SHEET

APPROVED FOR PUBLICATION

Ken L. Smith — STATE DESIGN ENGINEER
02-15-07 — DATE

Washington State Department of Transportation

EFFECTIVE: APRIL 2, 2007 TO JANUARY 6, 2008

EFFECTIVE: APRIL 2, 2007 TO JANUARY 6, 2008

EFFECTIVE: APRIL 2, 2007 TO JANUARY 6, 2008

EFFECTIVE: APRIL 2, 2007 TO JANUARY 6, 2008

DRAWN BY: ELENA BRUNSTEIN

SIGN SPACING = X		
RURAL ROADS	45 / 55 MPH	500' ±
RURAL ROADS & URBAN ARTERIALS	35 / 40 MPH	350' ±
RURAL ROADS, URBAN ARTERIALS, RESIDENTIAL & BUSINESS DISTRICTS	25 / 30 MPH	200' ±
URBAN STREETS	25 MPH OR LESS	100' ±
ALL SIGNS ARE BLACK ON ORANGE UNLESS DESIGNATED OTHERWISE		

ALL SIGN SPACING MAY BE ADJUSTED TO ACCOMMODATE AT-GRADE INTERSECTIONS AND DRIVEWAYS.

CHANNELIZING DEVICE SPACING		
POSTED SPEED (MPH)	IN TAPER (FEET)	IN TANGENT (FEET)
50 / 70	40	80
35 / 45	30	60
25 / 30	20	40

MINIMUM TAPER LENGTH = L (FEET)							
LANE WIDTH (FEET)	POSTED SPEED (MPH) 25	30	35	40	45	50	55
10	105	150	205	270	450	500	550
11	115	165	225	294	495	550	605
12	125	180	245	320	540	600	660

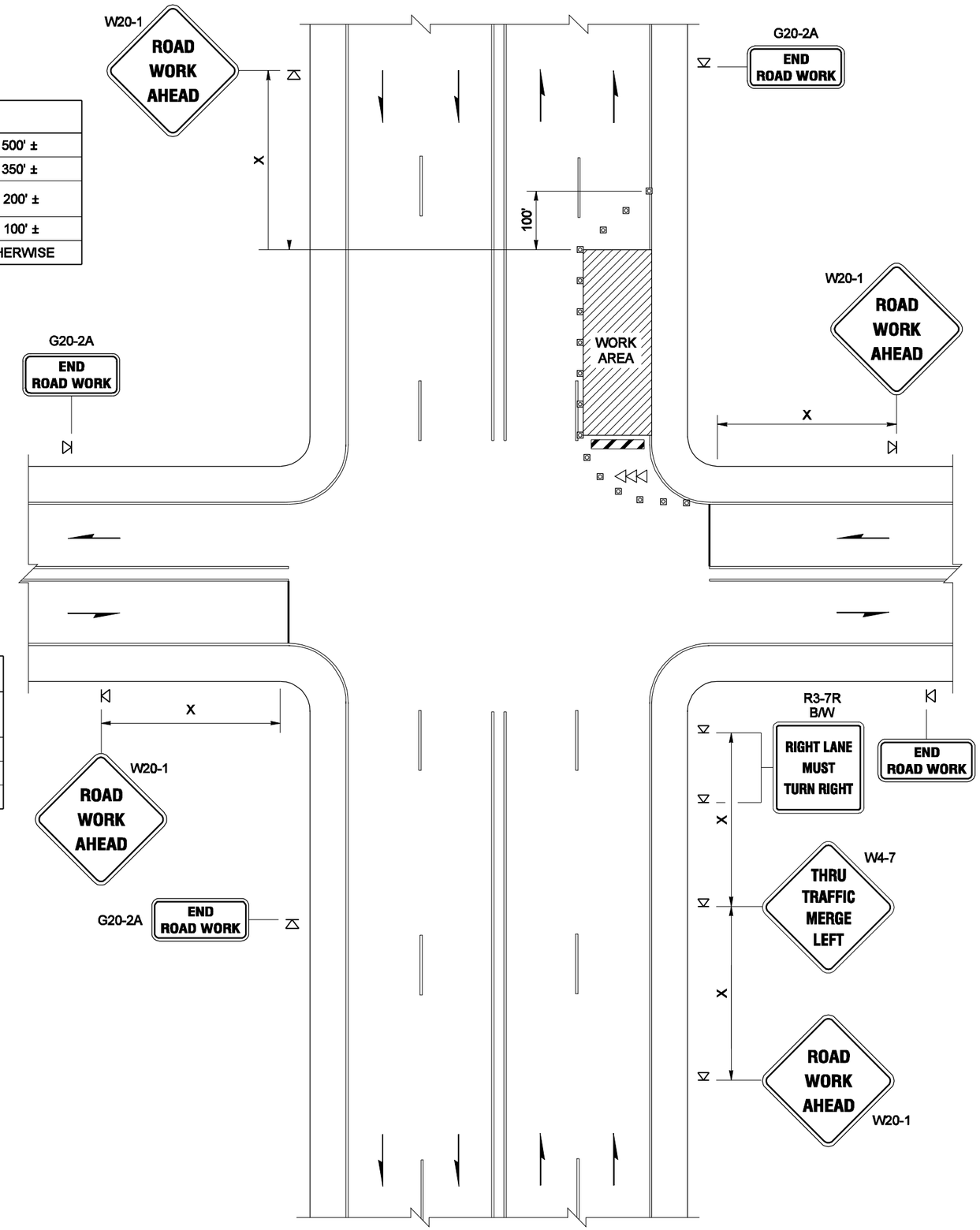

LEGEND

- SIGN LOCATION
- CHANNELIZING DEVICES
- BARRICADE ~ TYPE 3 L
- ARROW PANEL

NOTES

1. If the work space extends across a crosswalk, the crosswalk should be closed (see Standard Plan K-34.20).
2. The normal procedure is to close on the near side of the intersection any lane that is not carried through the intersection. However, when this results in the closure of a right lane having significant right turning movements, then the right lane may be restricted to right turn only, as shown. This procedure increases the through capacity by eliminating right turns from the open through lane.
3. Prohibit turns as necessary for traffic conditions.
4. Flashing Warning Lights (Type A per MUTCD) should be used, as needed, to mark barricades at night.
5. Steady Burning Warning Lights (Type C per MUTCD) shall be used to mark channelizing devices at night.
6. For long term projects, conflicting pavement markings that are no longer applicable shall be removed or obliterated. Temporary markings shall be used as necessary.
7. For signs size refer to Manual on Uniform Traffic Control Devices (MUTCD) and WSDOT Sign Fabrication Manual M55-05.

FOR LOCAL AGENCY USE ONLY
NOT FOR USE ON STATE ROUTES

THEODORE J. TREPANIER
STATE OF WASHINGTON
25335
REGISTERED
PROFESSIONAL ENGINEER

EXPIRES AUGUST 9, 2007

NOTE: THIS PLAN IS NOT A LEGAL ENGINEERING DOCUMENT BUT AN ELECTRONIC DUPLICATE. THE ORIGINAL, SIGNED BY THE ENGINEER AND APPROVED FOR PUBLICATION, IS KEPT ON FILE AT THE WASHINGTON STATE DEPARTMENT OF TRANSPORTATION. A COPY MAY BE OBTAINED UPON REQUEST.

INTERSECTION ~ RIGHT LANE CLOSURE FAR SIDE
STANDARD PLAN K-32.20-00

SHEET 1 OF 1 SHEET

APPROVED FOR PUBLICATION

Ken L. Smith — STATE DESIGN ENGINEER — *02-15-07* — DATE

Washington State Department of Transportation

EFFECTIVE: APRIL 2, 2007 TO JANUARY 6, 2008

EFFECTIVE: APRIL 2, 2007 TO JANUARY 6, 2008

EFFECTIVE: APRIL 2, 2007 TO JANUARY 6, 2008

EFFECTIVE: APRIL 2, 2007 TO JANUARY 6, 2008

DRAWN BY: ELENA BRUNSTEIN

SIGN SPACING = X		
RURAL ROADS	45 / 55 MPH	500' ±
RURAL ROADS & URBAN ARTERIALS	35 / 40 MPH	350' ±
RURAL ROADS, URBAN ARTERIALS, RESIDENTIAL & BUSINESS DISTRICTS	25 / 30 MPH	200' ±
URBAN STREETS	25 MPH OR LESS	100' ±
ALL SIGNS ARE BLACK ON ORANGE UNLESS DESIGNATED OTHERWISE		

ALL SIGN SPACING MAY BE ADJUSTED TO ACCOMMODATE AT-GRADE INTERSECTIONS AND DRIVEWAYS.

MINIMUM TAPER LENGTH = L (FEET)							
LANE WIDTH (FEET)	POSTED SPEED (MPH) 25	30	35	40	45	50	55
10	105	150	205	270	450	500	550
11	115	165	225	294	495	550	605
12	125	180	245	320	540	600	660

CHANNELIZING DEVICE SPACING		
POSTED SPEED (MPH)	IN TAPER (FEET)	IN TANGENT (FEET)
50 / 70	40	80
35 / 45	30	60
25 / 30	20	40

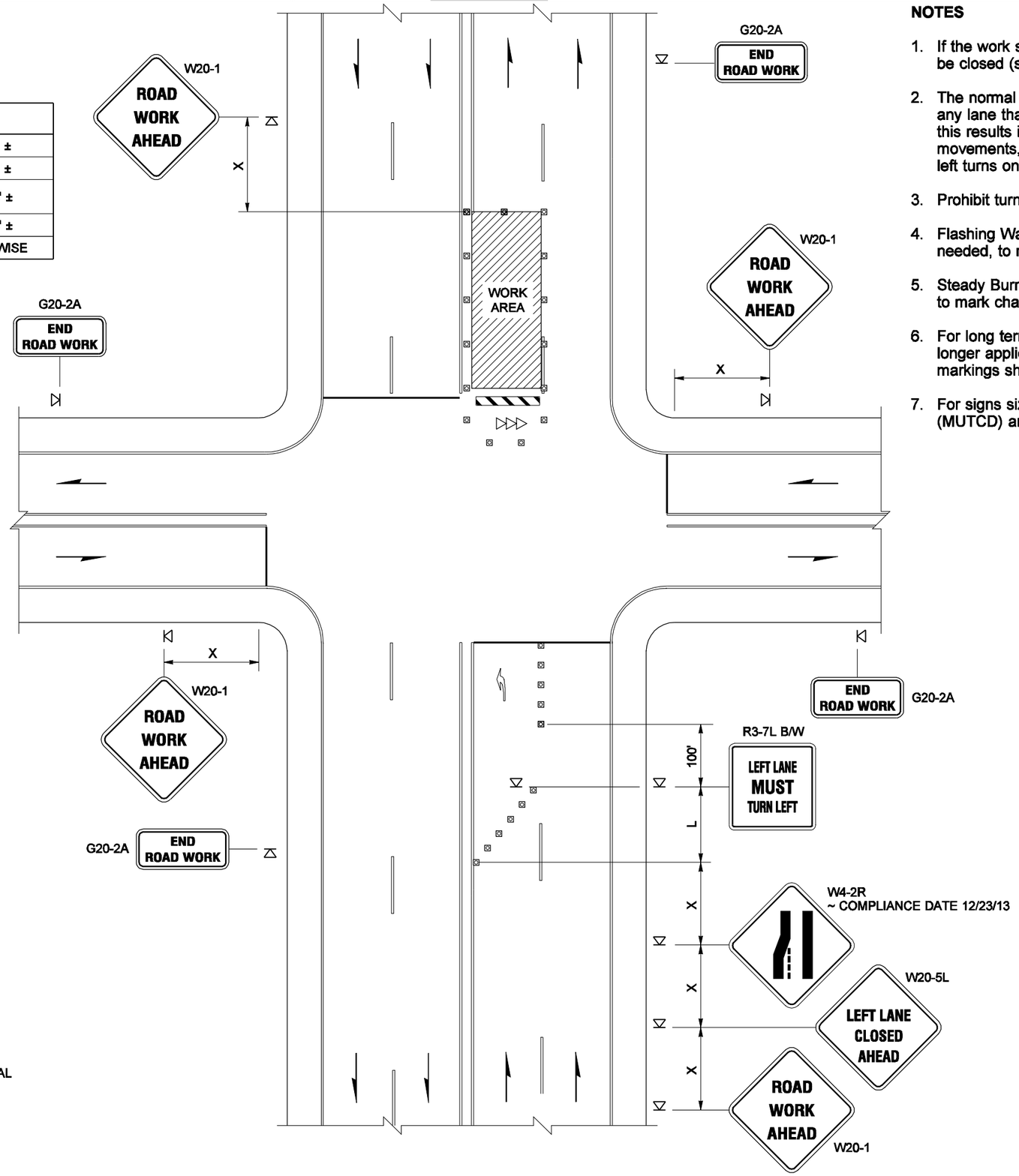

LEGEND

- SIGN LOCATION
- CHANNELIZING DEVICES
- TEMPORARY TRAFFIC ARROW ~ OPTIONAL
- ARROW PANEL
- BARRICADE ~ TYPE 3 R

NOTES

1. If the work space extends across a crosswalk, the crosswalk should be closed (see Standard Plan K-34.20).
2. The normal procedure is to close on the near side of the intersection any lane that is not carried through the intersection. However, when this results in the closure of a left lane having significant left-turning movements, then the left lane may be reopened as a turn bay for left turns only, as shown.
3. Prohibit turns as necessary for traffic conditions.
4. Flashing Warning Lights (Type A per MUTCD) should be used, as needed, to mark barricades at night.
5. Steady Burning Warning Lights (Type C per MUTCD) shall be used to mark channelizing devices at night.
6. For long term projects, conflicting pavement markings that are no longer applicable shall be removed or obliterated. Temporary markings shall be used as necessary.
7. For signs size refer to Manual on Uniform Traffic Control Devices (MUTCD) and WSDOT Sign Fabrication Manual M55-05.

FOR LOCAL AGENCY USE ONLY
NOT FOR USE ON STATE ROUTES

THEODORE J. TREPANIER
STATE OF WASHINGTON
25335
REGISTERED
PROFESSIONAL ENGINEER

EXPIRES AUGUST 9, 2007

NOTE: THIS PLAN IS NOT A LEGAL ENGINEERING DOCUMENT BUT AN ELECTRONIC DUPLICATE. THE ORIGINAL, SIGNED BY THE ENGINEER AND APPROVED FOR PUBLICATION, IS KEPT ON FILE AT THE WASHINGTON STATE DEPARTMENT OF TRANSPORTATION. A COPY MAY BE OBTAINED UPON REQUEST.

INTERSECTION ~ LEFT LANE CLOSURE FAR SIDE

STANDARD PLAN K-32.40-00

SHEET 1 OF 1 SHEET

APPROVED FOR PUBLICATION

Ken L. Smith — STATE DESIGN ENGINEER
02-15-07 — DATE

Washington State Department of Transportation

EFFECTIVE: APRIL 2, 2007 TO JANUARY 6, 2008

EFFECTIVE: APRIL 2, 2007 TO JANUARY 6, 2008

EFFECTIVE: APRIL 2, 2007 TO JANUARY 6, 2008
EFFECTIVE: APRIL 2, 2007 TO JANUARY 6, 2008

DRAWN BY: ELENA BRUNSTEIN

SIGN SPACING = X		
RURAL ROADS	45 / 55 MPH	500' ±
RURAL ROADS & URBAN ARTERIALS	35 / 40 MPH	350' ±
RURAL ROADS, URBAN ARTERIALS, RESIDENTIAL & BUSINESS DISTRICTS	25 / 30 MPH	200' ±
URBAN STREETS	25 MPH OR LESS	100' ±
ALL SIGNS ARE BLACK ON ORANGE UNLESS DESIGNATED OTHERWISE		

ALL SIGN SPACING MAY BE ADJUSTED TO ACCOMMODATE AT-GRADE INTERSECTIONS AND DRIVEWAYS.

MINIMUM TAPER LENGTH = L (FEET)							
LANE WIDTH (FEET)	POSTED SPEED (MPH)						
	25	30	35	40	45	50	55
10	105	150	205	270	450	500	550
11	115	165	225	294	495	550	605
12	125	180	245	320	540	600	660

CHANNELIZING DEVICE SPACING		
POSTED SPEED (MPH)	IN TAPER (FEET)	IN TANGENT (FEET)
50 / 70	40	80
35 / 45	30	60
25 / 30	20	40

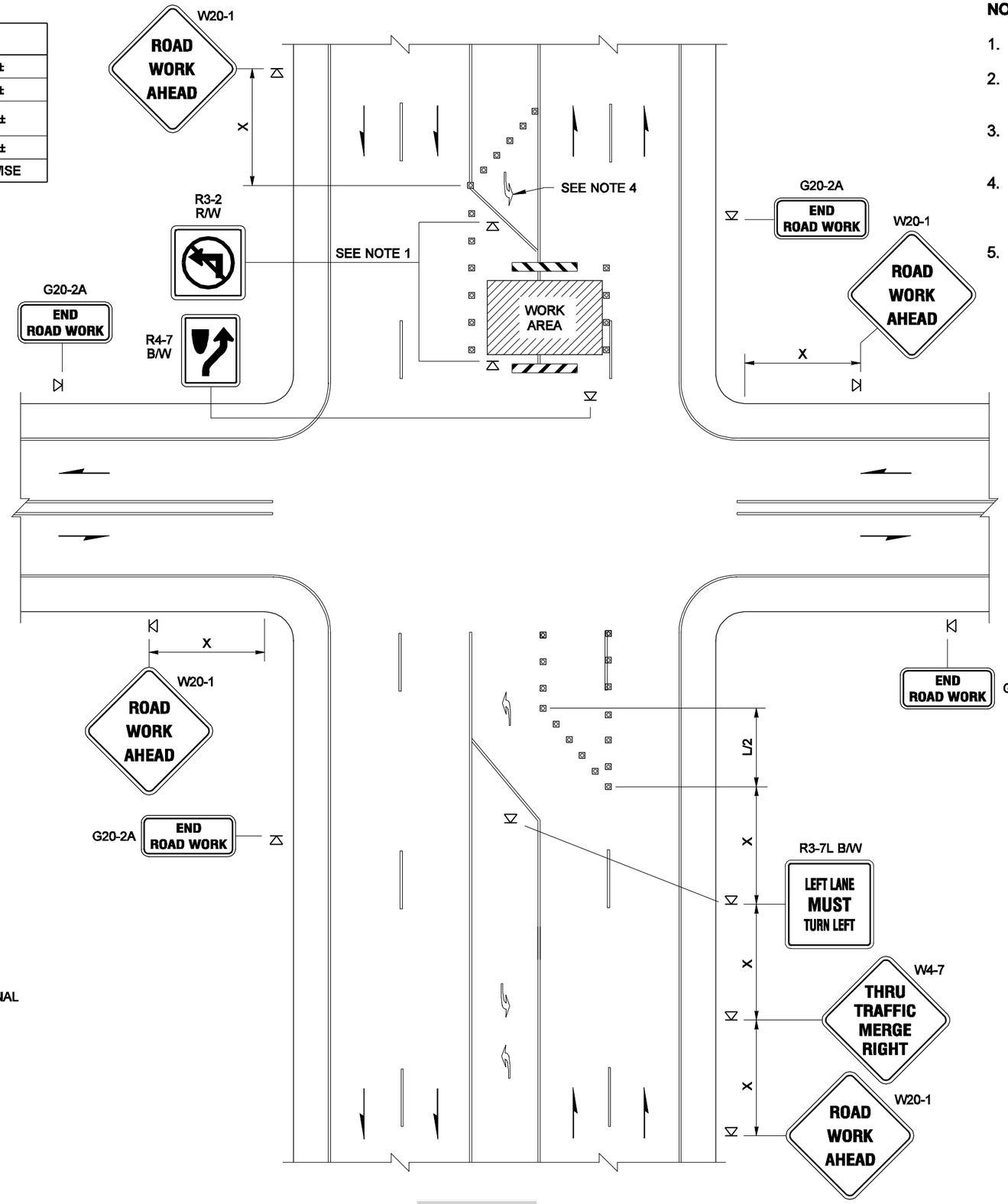

LEGEND

- SIGN LOCATION
- CHANNELIZING DEVICES
- TEMPORARY TRAFFIC ARROW ~ OPTIONAL
- BARRICADE ~ TYPE 3 R

NOTES

1. Prohibit turns as necessary for traffic conditions.
2. Flashing Warning Lights (Type A per MUTCD) should be used, as needed, to mark barricades at night.
3. Steady Burning Warning Lights (Type C per MUTCD) shall be used to mark channelizing devices at night.
4. For long term projects, conflicting pavement markings that are no longer applicable shall be removed or obliterated. Temporary markings shall be used as necessary.
5. For signs size refer to Manual on Uniform Traffic Control Devices (MUTCD) and WSDOT Sign Fabrication Manual M55-05.

FOR LOCAL AGENCY USE ONLY
NOT FOR USE ON STATE ROUTES

THEODORE J. TREPANIER
STATE OF WASHINGTON
25335
REGISTERED
PROFESSIONAL ENGINEER

EXPIRES AUGUST 9, 2007

NOTE: THIS PLAN IS NOT A LEGAL ENGINEERING DOCUMENT BUT AN ELECTRONIC DUPLICATE. THE ORIGINAL, SIGNED BY THE ENGINEER AND APPROVED FOR PUBLICATION, IS KEPT ON FILE AT THE WASHINGTON STATE DEPARTMENT OF TRANSPORTATION. A COPY MAY BE OBTAINED UPON REQUEST.

INTERSECTION ~ MULTIPLE LANE CLOSURE

STANDARD PLAN K-32.60-00

SHEET 1 OF 1 SHEET

APPROVED FOR PUBLICATION

Ken L. Smith — STATE DESIGN ENGINEER — *02-15-07* — DATE

Washington State Department of Transportation

EFFECTIVE: APRIL 2, 2007 TO JANUARY 6, 2008
EFFECTIVE: APRIL 2, 2007 TO JANUARY 6, 2008

EFFECTIVE: APRIL 2, 2007 TO JANUARY 6, 2008

DRAWN BY: ELENA BRUNSTEIN

LONGITUDINAL BUFFER SPACE = B					
POSTED SPEED (MPH)	25	30	35	40	45
LENGTH **B** (FEET)	55	85	120	170	270

SIGN SPACING = X		
RURAL ROADS	45 / 55 MPH	500' ±
RURAL ROADS & URBAN ARTERIALS	35 / 40 MPH	350' ±
RURAL ROADS, URBAN ARTERIALS, RESIDENTIAL & BUSINESS DISTRICTS	25 / 30 MPH	200' ±
URBAN STREETS	25 MPH OR LESS	100' ±
ALL SIGNS ARE BLACK ON ORANGE UNLESS DESIGNATED OTHERWISE		

ALL SIGN SPACING MAY BE ADJUSTED TO ACCOMMODATE AT-GRADE INTERSECTIONS AND DRIVEWAYS.

MINIMUM TAPER LENGTH = L (FEET)							
LANE WIDTH (FEET)	POSTED SPEED (MPH) 25	30	35	40	45	50	55
10	105	150	205	270	450	500	550
11	115	165	225	294	495	550	605
12	125	180	245	320	540	600	660

CHANNELIZING DEVICE SPACING		
POSTED SPEED (MPH)	IN TAPER (FEET)	IN TANGENT (FEET)
50 / 70	40	80
35 / 45	30	60
25 / 30	20	40

LEGEND

- SIGN LOCATION
- CHANNELIZING DEVICES
- ARROW PANEL
- BARRICADE ~ TYPE 3 L
- OBLITERATED MARKING

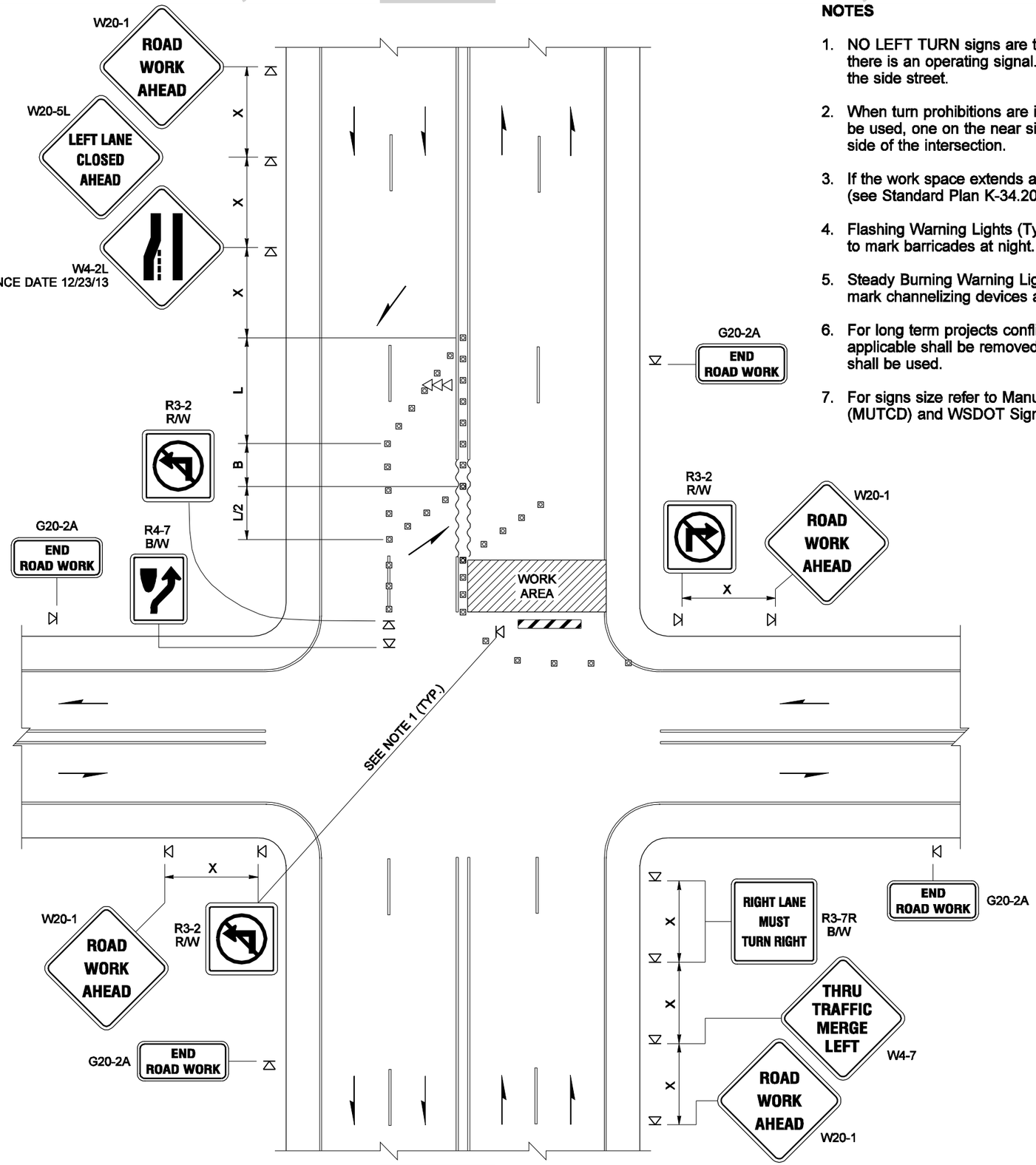

NOTES

1. NO LEFT TURN signs are to be used if traffic volumes are too high or there is an operating signal. Close the left turn pocket if there is one on the side street.
2. When turn prohibitions are implemented, two turn prohibition signs should be used, one on the near side and, space permitting, one on on the far side of the intersection.
3. If the work space extends a crosswalk, the crosswalk should be closed (see Standard Plan K-34.20).
4. Flashing Warning Lights (Type A per MUTCD) should be used, as needed, to mark barricades at night.
5. Steady Burning Warning Lights (Type C per MUTCD) shall be used to mark channelizing devices at night.
6. For long term projects conflicting pavement markings that are no longer applicable shall be removed or obliterated. Temporary markings shall be used.
7. For signs size refer to Manual on Uniform Traffic Control Devices (MUTCD) and WSDOT Sign Fabrication Manual M55-05.

FOR LOCAL AGENCY USE ONLY
NOT FOR USE ON STATE ROUTES

THEODORE J. TREPANIER
STATE OF WASHINGTON
25335
REGISTERED
PROFESSIONAL ENGINEER

EXPIRES AUGUST 9, 2007

NOTE: THIS PLAN IS NOT A LEGAL ENGINEERING DOCUMENT BUT AN ELECTRONIC DUPLICATE. THE ORIGINAL, SIGNED BY THE ENGINEER AND APPROVED FOR PUBLICATION, IS KEPT ON FILE AT THE WASHINGTON STATE DEPARTMENT OF TRANSPORTATION. A COPY MAY BE OBTAINED UPON REQUEST.

INTERSECTION ~ HALF ROAD CLOSURE WITH LANE SHIFT STANDARD PLAN K-32.80-00

SHEET 1 OF 1 SHEET

APPROVED FOR PUBLICATION

Ken L. Smith — STATE DESIGN ENGINEER — *02-15-07* — DATE

Washington State Department of Transportation

EFFECTIVE: APRIL 2, 2007 TO JANUARY 6, 2008

EFFECTIVE: APRIL 2, 2007 TO JANUARY 6, 2008

DRAWN BY: ELENA BRUNSTEIN

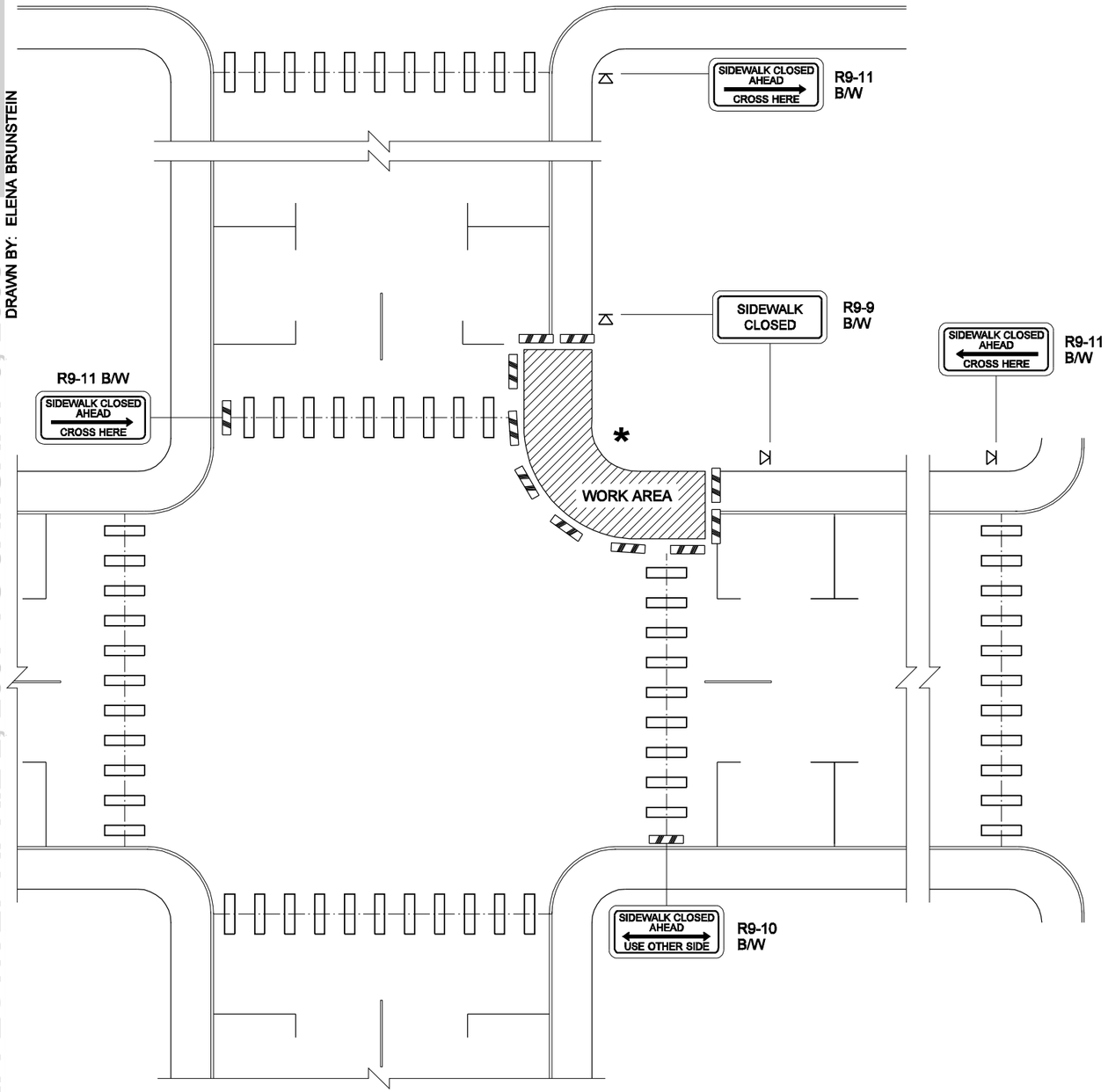

PEDESTRIAN DETOUR
WORKING HOURS

LEGEND

- SIGN LOCATION
- CHANNELIZING DEVICES
- TYPE 2 BARRICADE

* R8-3 B/W — NO PARKING

Install on Type 2 Barricades throughout the work area 24 hours prior to implementing traffic control. Prior notification of Local Law Enforcement required.

EFFECTIVE: APRIL 2, 2007 TO JANUARY 6, 2008

EFFECTIVE: APRIL 2, 2007 TO JANUARY 6, 2008

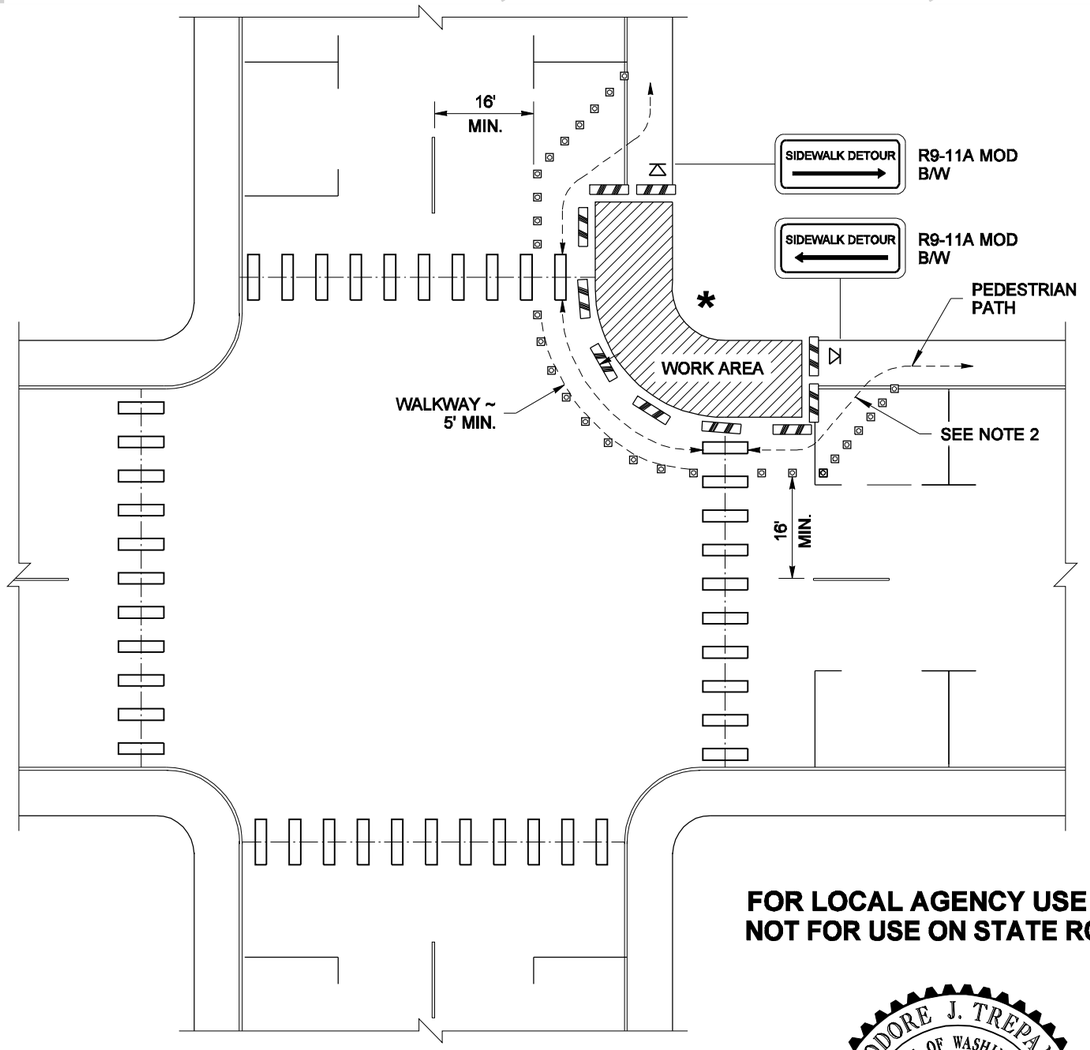

PEDESTRIAN DETOUR
NON-WORKING HOURS

NOTES

1. When crosswalks or other pedestrian facilities are closed or relocated, temporary facilities shall be detectable and shall include accessibility features consistent with the features present in the existing pedestrian facility.
2. Controls shown are for pedestrian traffic only.
3. Use Warning Lights on barricades.
4. Maintain a minimum width of 3 feet for pedestrian path.
5. For signs size refer to Manual on Uniform Traffic Control Devices (MUTCD) and WSDOT Sign Fabrication Manual M55-05.

FOR LOCAL AGENCY USE ONLY
NOT FOR USE ON STATE ROUTES

THEODORE J. TREPANIER — STATE OF WASHINGTON — 25335 — REGISTERED PROFESSIONAL ENGINEER

EXPIRES AUGUST 9, 2007

NOTE: THIS PLAN IS NOT A LEGAL ENGINEERING DOCUMENT BUT AN ELECTRONIC DUPLICATE. THE ORIGINAL, SIGNED BY THE ENGINEER AND APPROVED FOR PUBLICATION, IS KEPT ON FILE AT THE WASHINGTON STATE DEPARTMENT OF TRANSPORTATION. A COPY MAY BE OBTAINED UPON REQUEST.

INTERSECTION ~ PEDESTRIAN DETOUR

STANDARD PLAN K-34.20-00

SHEET 1 OF 1 SHEET

APPROVED FOR PUBLICATION

Ken L. Smith — STATE DESIGN ENGINEER — *02-15-07* — DATE

Washington State Department of Transportation

EFFECTIVE: APRIL 2, 2007 TO JANUARY 6, 2008

EFFECTIVE: APRIL 2, 2007 TO JANUARY 6, 2008

EFFECTIVE: APRIL 2, 2007 TO JANUARY 6, 2008

DRAWN BY: ELENA BRUNSTEIN

BUFFER DATA	
TYPICAL PROTECTIVE VEHICLE WITH TMA (SEE NOTE 1)	
VEHICLE TYPE	**LOADED WEIGHT**
4 YARD DUMP TRUCK, SERVICE TRUCK, FLAT BED, ETC.	MINIMUM WEIGHT 15,000 LBS. (MAXIMUM WEIGHT SHALL BE IN ACCORDANCE WITH MANUFACTURER RECOMMENDATION)
① **ROLL AHEAD STOPPING DISTANCE** = 30 FEET MIN. (DRY PAVEMENT ASSUMED)	

MINIMUM TAPER LENGTH = L (FEET)							
LANE WIDTH (FEET)	POSTED SPEED (MPH)						
	25	30	35	40	45	50	55
10	105	150	205	270	450	500	550
11	115	165	225	294	495	550	605
12	125	180	245	320	540	600	660

SIGN SPACING = X (1)		
RURAL ROADS	45 / 55 MPH	500' ±
RURAL ROADS & URBAN ARTERIALS	35 / 40 MPH	350' ±
RURAL ROADS, URBAN ARTERIALS, RESIDENTIAL & BUSINESS DISTRICTS	25 / 30 MPH	200' ± (2)
URBAN STREETS	25 MPH OR LESS	100' ± (2)
ALL SIGNS ARE BLACK ON ORANGE UNLESS DESIGNATED OTHERWISE		

(1) ALL SIGN SPACING MAY BE ADJUSTED TO ACCOMMODATE AT-GRADE INTERSECTIONS AND DRIVEWAYS.

(2) THIS SIGN SPACING MAY BE REDUCED IN URBAN AREAS TO FIT ROADWAY CONDITIONS.

NOTES

1. A Protective Vehicle is recommended regardless if a Truck Mounted Attenuator (TMA) is available; a work vehicle may be used. When no TMA is used, the Protective Vehicle shall be strategically located to shield workers, with no specific Roll-Ahead distance.
2. For long term projects conflicting pavement markings that are no longer applicable shall be removed. Temporary markings shall be used as necessary and signs shall be post mounted.
3. The sign MOTORCYCLES USE EXTREME CAUTION may be used.
4. For signs size refer to Manual on Uniform Traffic Control Devices (MUTCD) and WSDOT Sign Fabrication Manual M55-05.

CHANNELIZING DEVICE SPACING		
POSTED SPEED (MPH)	IN TAPER (FEET)	IN TANGENT (FEET)
50 / 70	40	80
35 / 45	30	60
25 / 30	20	40

* WHEN APPLICABLE

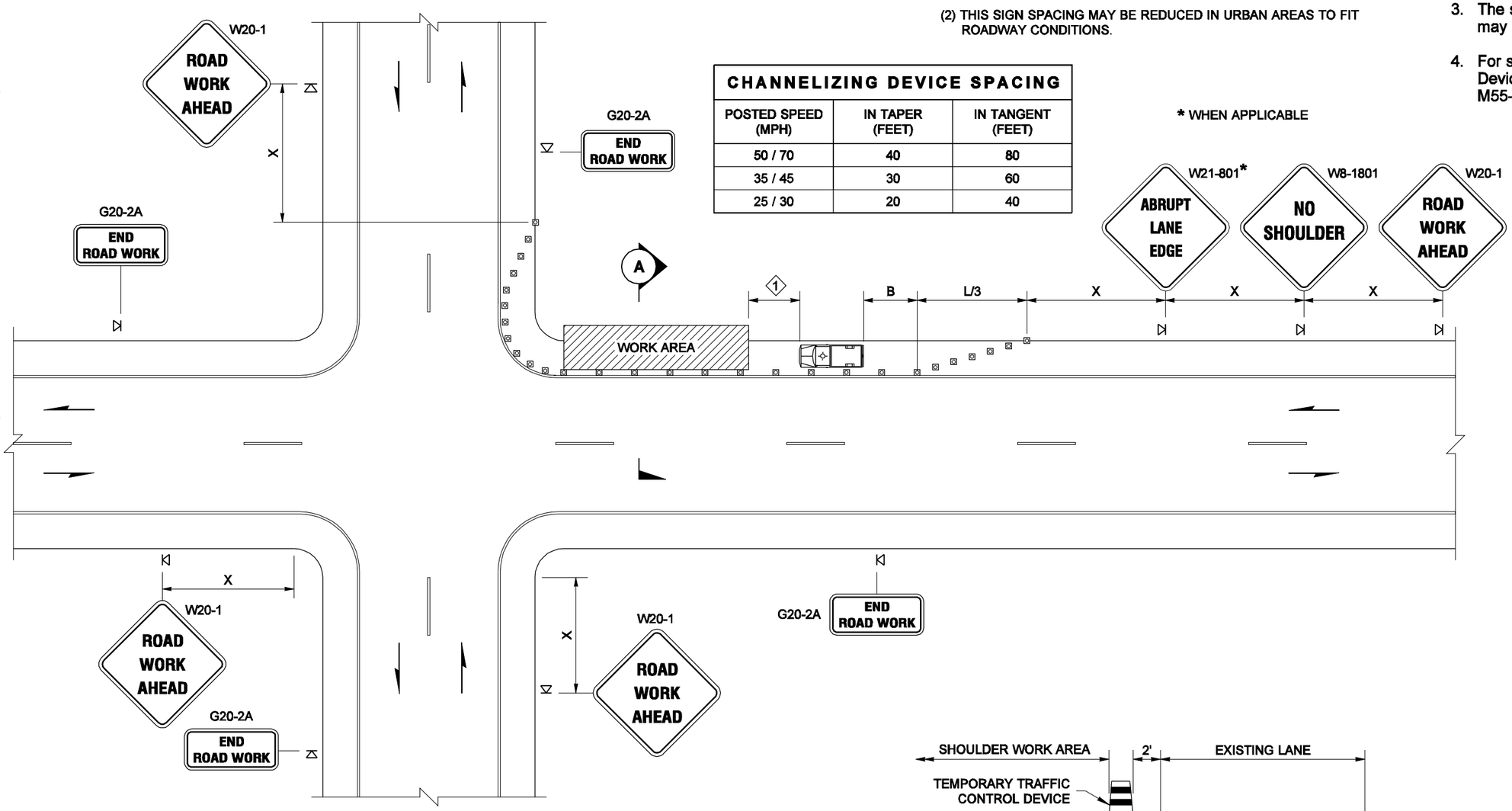

LEGEND

- SIGN LOCATION
- CHANNELIZING DEVICES
- PROTECTIVE VEHICLE ~ RECOMMENDED

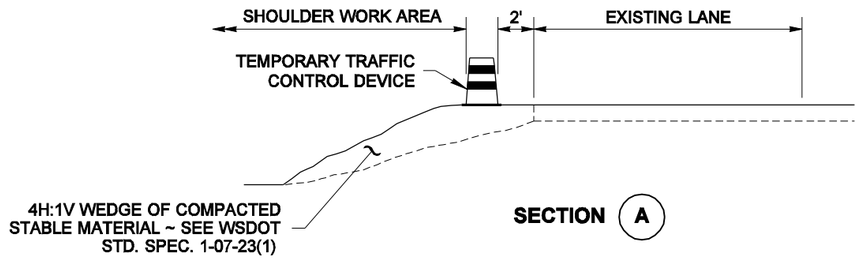

SECTION (A)

SHOULDER WORK AREA PROTECTION
(NOT TO SCALE)

FOR LOCAL AGENCY USE ONLY
NOT FOR USE ON STATE ROUTES

THEODORE J. TREPANIER
STATE OF WASHINGTON
25335
REGISTERED
PROFESSIONAL ENGINEER

EXPIRES AUGUST 9, 2007

NOTE: THIS PLAN IS NOT A LEGAL ENGINEERING DOCUMENT BUT AN ELECTRONIC DUPLICATE. THE ORIGINAL, SIGNED BY THE ENGINEER AND APPROVED FOR PUBLICATION, IS KEPT ON FILE AT THE WASHINGTON STATE DEPARTMENT OF TRANSPORTATION. A COPY MAY BE OBTAINED UPON REQUEST.

INTERSECTION ~ SHOULDER WORK

STANDARD PLAN K-36.20-00

SHEET 1 OF 1 SHEET

APPROVED FOR PUBLICATION

Ken L. Smith — STATE DESIGN ENGINEER — *02-15-07* — DATE

Washington State Department of Transportation

EFFECTIVE: APRIL 2, 2007 TO JANUARY 6, 2008

EFFECTIVE: APRIL 2, 2007 TO JANUARY 6, 2008
EFFECTIVE: APRIL 2, 2007 TO JANUARY 6, 2008

DRAWN BY: ELENA BRUNSTEIN

LONGITUDINAL BUFFER SPACE = B										
POSTED SPEED (MPH)	25	30	35	40	45	50	55	60	65	70
LENGTH **B** (FEET)	SEE STD. PLAN K-40.40				360	425	495	570	645	730

BUFFER DATA	
TYPICAL PROTECTIVE VEHICLE WITH TMA (SEE NOTE 1)	
VEHICLE TYPE	**LOADED WEIGHT**
4 YARD DUMP TRUCK, SERVICE TRUCK, FLAT BED, ETC.	MINIMUM WEIGHT 15,000 LBS. (MAXIMUM WEIGHT SHALL BE IN ACCORDANCE WITH MANU-FACTURER RECOMMENDATION)
① **ROLL AHEAD STOPPING DISTANCE** = 30 FEET MIN. (DRY PAVEMENT ASSUMED)	

MINIMUM TAPER LENGTH = L (FEET)										
SHOULDER WIDTH (FEET)	POSTED SPEED (MPH)									
	25	30	35	40	45	50	55	60	65	70
6	SEE STD. PLAN				270	300	330	360	390	420
8		K-40.40			360	400	440	480	520	560
10					450	500	550	600	650	700
LESS THAN 6	3 DEVICES MINIMUM, SPACED 10' O.C.									

CHANNELIZING DEVICE SPACING		
POSTED SPEED (MPH)	IN TAPER (FEET)	IN TANGENT (FEET)
50 / 70	40	80
45 / 50	30	60

NOTES

1. A Protective Vehicle is recommended regardless if a TMA is available; a work vehicle may be used. When no TMA is used, the Protective Vehicle shall be strategically located to shield workers, with no specific Roll-Ahead distance.
2. Channelizing Device spacing for the downstream taper option shall be 20' O.C.
3. No Encroachment on the traveled lane is permitted. If Encroachment is necessary, the lane shall be closed (see Standard Plan K-24.20).
4. Signs to be post mounted for long term projects.
5. For signs size refer to Manual on Uniform Traffic Control Devices (MUTCD) and WSDOT Sign Fabrication Manual M55-05.

SIGN SPACING = X		
RURAL HIGHWAYS	60 / 65 MPH	800' ±
RURAL ROADS	45 / 55 MPH	500' ±
ALL SIGNS ARE BLACK ON ORANGE UNLESS DESIGNATED OTHERWISE		

ALL SIGN SPACING MAY BE ADJUSTED TO ACCOMMODATE INTERCHANGE RAMPS, AT-GRADE INTERSECTIONS, AND DRIVEWAYS.

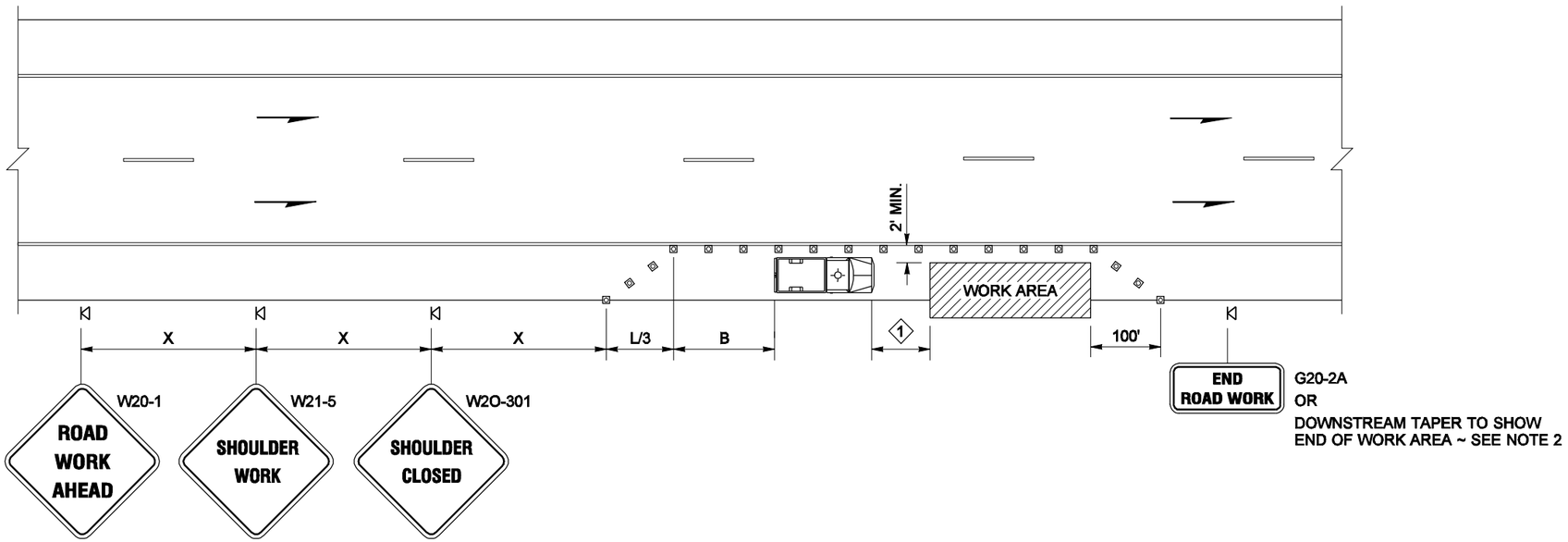

LEGEND

- SIGN LOCATION
- CHANNELIZING DEVICES
- PROTECTIVE VEHICLE ~ RECOMMENDED

FOR LOCAL AGENCY USE ONLY
NOT FOR USE ON STATE ROUTES

THEODORE J. TREPANIER
STATE OF WASHINGTON
25335
REGISTERED
PROFESSIONAL ENGINEER

EXPIRES AUGUST 9, 2007

NOTE: THIS PLAN IS NOT A LEGAL ENGINEERING DOCUMENT BUT AN ELECTRONIC DUPLICATE. THE ORIGINAL, SIGNED BY THE ENGINEER AND APPROVED FOR PUBLICATION, IS KEPT ON FILE AT THE WASHINGTON STATE DEPARTMENT OF TRANSPORTATION. A COPY MAY BE OBTAINED UPON REQUEST.

SHOULDER CLOSURE ~ HIGH SPEED ROADWAY (45 MPH OR HIGHER) STANDARD PLAN K-40.20-00

SHEET 1 OF 1 SHEET

APPROVED FOR PUBLICATION

Ken L. Smith — STATE DESIGN ENGINEER — *02-15-07* — DATE

Washington State Department of Transportation

EFFECTIVE: APRIL 2, 2007 TO JANUARY 6, 2008
EFFECTIVE: APRIL 2, 2007 TO JANUARY 6, 2008

EFFECTIVE: APRIL 2, 2007 TO JANUARY 6, 2008

EFFECTIVE: APRIL 2, 2007 TO JANUARY 6, 2008

DRAWN BY: ELENA BRUNSTEIN

LONGITUDINAL BUFFER SPACE = B										
POSTED SPEED (MPH)	25	30	35	40	45	50	55	60	65	70
LENGTH **B** (FEET)	155	200	250	305	SEE STD. PLAN K-40.20					

BUFFER DATA	
TYPICAL PROTECTIVE VEHICLE WITH TMA (SEE NOTE 1)	
VEHICLE TYPE	**LOADED WEIGHT**
4 YARD DUMP TRUCK, SERVICE TRUCK, FLAT BED, ETC.	MINIMUM WEIGHT 15,000 LBS. (MAXIMUM WEIGHT SHALL BE IN ACCORDANCE WITH MANU-FACTURER RECOMMENDATION)
◇1 **ROLL AHEAD STOPPING DISTANCE** = 30 FEET MIN. (DRY PAVEMENT ASSUMED)	

MINIMUM TAPER LENGTH = L (FEET)										
SHOULDER WIDTH (FEET)	POSTED SPEED (MPH)									
	25	30	35	40	45	50	55	60	65	70
6	63	90	123	160						
8	84	120	164	214	SEE STD. PLAN K-40.20					
10	105	150	204	267						
LESS THAN 6	3 DEVICES MINIMUM, SPACED 10' O.C.									

CHANNELIZING DEVICE SPACING		
POSTED SPEED (MPH)	IN TAPER (FEET)	IN TANGENT (FEET)
35 / 40	30	60
25 / 30	20	40

NOTES

1. A Protective Vehicle is recommended regardless if a Truck Mounted Attenuator (TMA) is available; a work vehicle may be used. When no TMA is used, the Protective Vehicle shall be strategically located to shield workers, with no specific Roll-Ahead distance.
2. Channelizing Device spacing for the downstream taper option shall be 20' O.C.
3. For signs size refer to Manual on Uniform Traffic Control Devices (MUTCD) and WSDOT Sign Fabrication Manual M55-05.

SIGN SPACING = X (1)		
RURAL ROADS & URBAN ARTERIALS	35 / 40 MPH	350' ±
RURAL ROADS, URBAN ARTERIALS, RESIDENTIAL & BUSINESS DISTRICTS	25 / 30 MPH	200' ± (2)
URBAN STREETS	25 MPH OR LESS	100' ± (2)
ALL SIGNS ARE BLACK ON ORANGE UNLESS DESIGNATED OTHERWISE		

(1) ALL SIGN SPACING MAY BE ADJUSTED TO ACCOMMODATE INTERCHANGE RAMPS, AT-GRADE INTERSECTIONS, AND DRIVEWAYS.

(2) THIS SIGN SPACING MAY BE REDUCED IN URBAN AREAS TO FIT ROADWAY CONDITIONS.

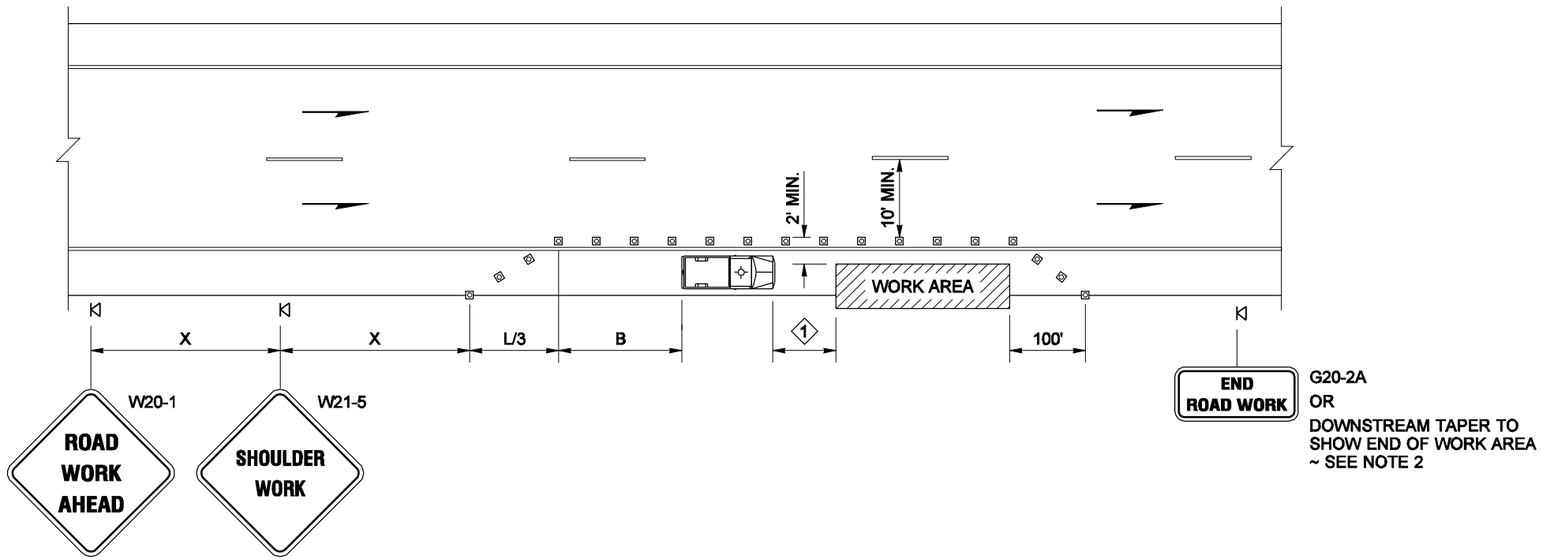

LEGEND

- SIGN LOCATION
- CHANNELIZING DEVICES
- PROTECTIVE VEHICLE ~ RECOMMENDED

FOR LOCAL AGENCY USE ONLY
NOT FOR USE ON STATE ROUTES

THEODORE J. TREPANIER
STATE OF WASHINGTON
25335
REGISTERED
PROFESSIONAL ENGINEER

EXPIRES AUGUST 9, 2007

NOTE: THIS PLAN IS NOT A LEGAL ENGINEERING DOCUMENT BUT AN ELECTRONIC DUPLICATE. THE ORIGINAL, SIGNED BY THE ENGINEER, AND APPROVED FOR PUBLICATION, IS KEPT ON FILE AT THE WASHINGTON STATE DEPARTMENT OF TRANSPORTATION. A COPY MAY BE OBTAINED UPON REQUEST.

SHOULDER CLOSURE ~ LOW SPEED ROADWAY (40 MPH OR LESS) STANDARD PLAN K-40.40-00

SHEET 1 OF 1 SHEET

APPROVED FOR PUBLICATION

Ken L. Smith — STATE DESIGN ENGINEER — *02-15-07* — DATE

Washington State Department of Transportation

EFFECTIVE: APRIL 2, 2007 TO JANUARY 6, 2008

EFFECTIVE: APRIL 2, 2007 TO JANUARY 6, 2008

EFFECTIVE: APRIL 2, 2007 TO JANUARY 6, 2008

DRAWN BY: ELENA BRUNSTEIN

PROTECTIVE VEHICLE ROLL AHEAD DISTANCE = R		
TYPICAL PROTECTIVE VEHICLE WITH TMA		
VEHICLE TYPE	LOADED WEIGHT	STATIONARY OPERATION
4 YARD DUMP TRUCK, SERVICE TRUCK, FLAT BED, ETC.	MINIMUM WEIGHT 15,000 LBS. (MAXIMUM WEIGHT SHALL BE IN ACCORDANCE WITH MANU-FACTURER RECOMMENDATION)	30 FEET
ROLL AHEAD DISTANCES VARY AND SHALL BE DETERMINED IN FIELD BASED ON WORK OPERATION AND SITE SPECIFIC CONDITIONS		

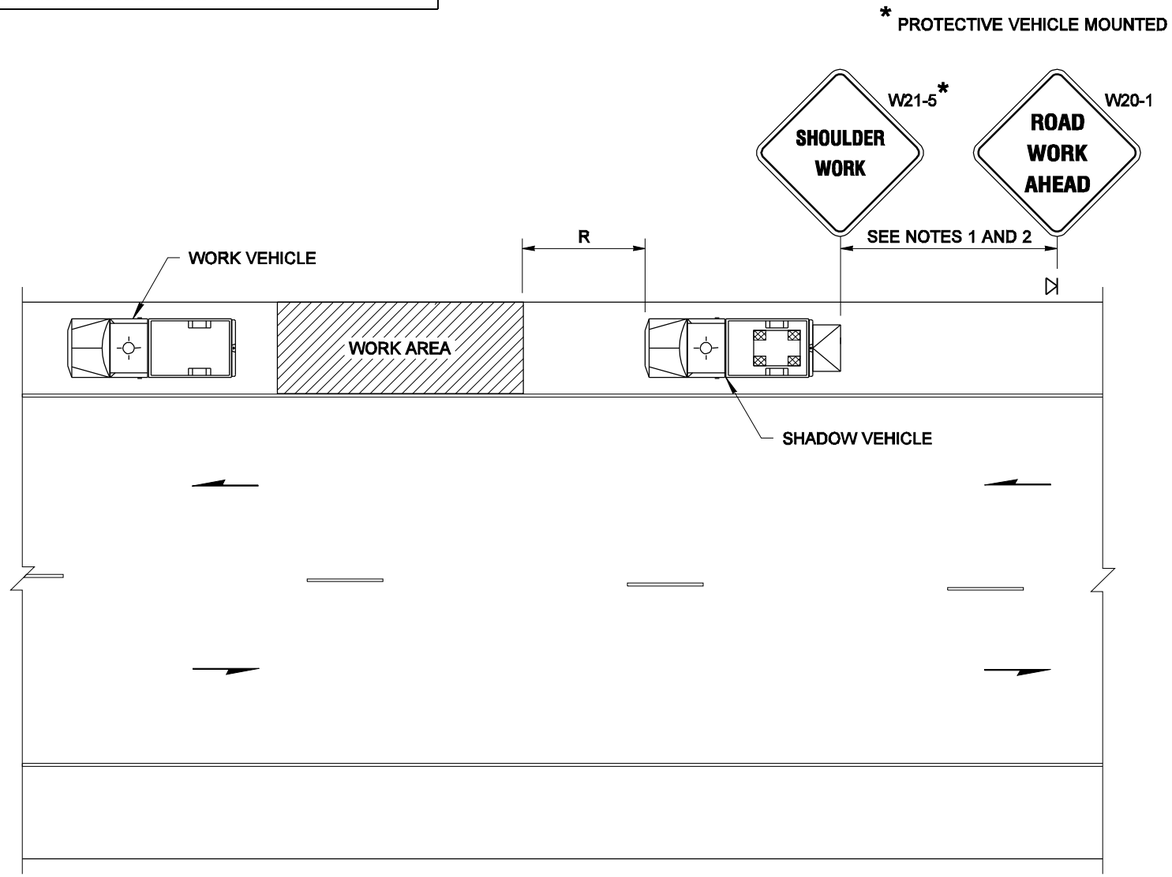

LEGEND

- SIGN LOCATION
- PROTECTIVE VEHICLE
- TRUCK MOUNTED ATTENUATOR ~ RECOMMENDED
- SEQUENTIAL ARROW PANEL TYPE "B" ~ CAUTION MODE
- WARNING BEACON ~ REQUIRED

NOTES

1. In those situations where multiple work locations within a limited distance make it practical to place stationary signs, the distance between the advance Warning Sign and the Work Area should not exceed 5 miles.
2. In those situations where the distance between the advance signs and the Work Area is 2 to 5 miles, a Supplemental Distance plaque should be used with the ROAD WORK AHEAD sign.
3. No encroachment into traffic lane is permitted with this plan.
4. Work vehicle and Shadow vehicle shall use Warning Beacons.
5. Shadow vehicle shall maintain 500' to 1000' of sight distance to approaching traffic.
6. For signs size refer to Manual on Uniform Traffic Control Devices (MUTCD) and WSDOT Sign Fabrication Manual M55-05.

FOR LOCAL AGENCY USE ONLY
NOT FOR USE ON STATE ROUTES

THEODORE J. TREPANIER
STATE OF WASHINGTON
25335
REGISTERED
PROFESSIONAL ENGINEER

EXPIRES AUGUST 9, 2007

NOTE: THIS PLAN IS NOT A LEGAL ENGINEERING DOCUMENT BUT AN ELECTRONIC DUPLICATE. THE ORIGINAL, SIGNED BY THE ENGINEER AND APPROVED FOR PUBLICATION, IS KEPT ON FILE AT THE WASHINGTON STATE DEPARTMENT OF TRANSPORTATION. A COPY MAY BE OBTAINED UPON REQUEST.

SHOULDER CLOSURE ~ SHORT DURATION

STANDARD PLAN K-40.60-00

SHEET 1 OF 1 SHEET

APPROVED FOR PUBLICATION

Ken L. Smith — STATE DESIGN ENGINEER
02-15-07 — DATE

Washington State Department of Transportation

EFFECTIVE: APRIL 2, 2007 TO JANUARY 6, 2008

EFFECTIVE: APRIL 2, 2007 TO JANUARY 6, 2008

DRAWN BY: ELENA BRUNSTEIN

SIGN SPACING = X (1)		
RURAL ROADS	45 / 55 MPH	500' ±
RURAL ROADS & URBAN ARTERIALS	35 / 40 MPH	350' ±
RURAL ROADS, URBAN ARTERIALS, RESIDENTIAL & BUSINESS DISTRICTS	25 / 30 MPH	200' ± (2)
URBAN STREETS	25 MPH OR LESS	100' ± (2)
ALL SIGNS ARE BLACK ON ORANGE UNLESS DESIGNATED OTHERWISE		

(1) ALL SIGN SPACING MAY BE ADJUSTED TO ACCOMMODATE AT-GRADE INTERSECTIONS AND DRIVEWAYS.

(2) THIS SIGN SPACING MAY BE REDUCED IN URBAN AREAS TO FIT ROADWAY CONDITIONS.

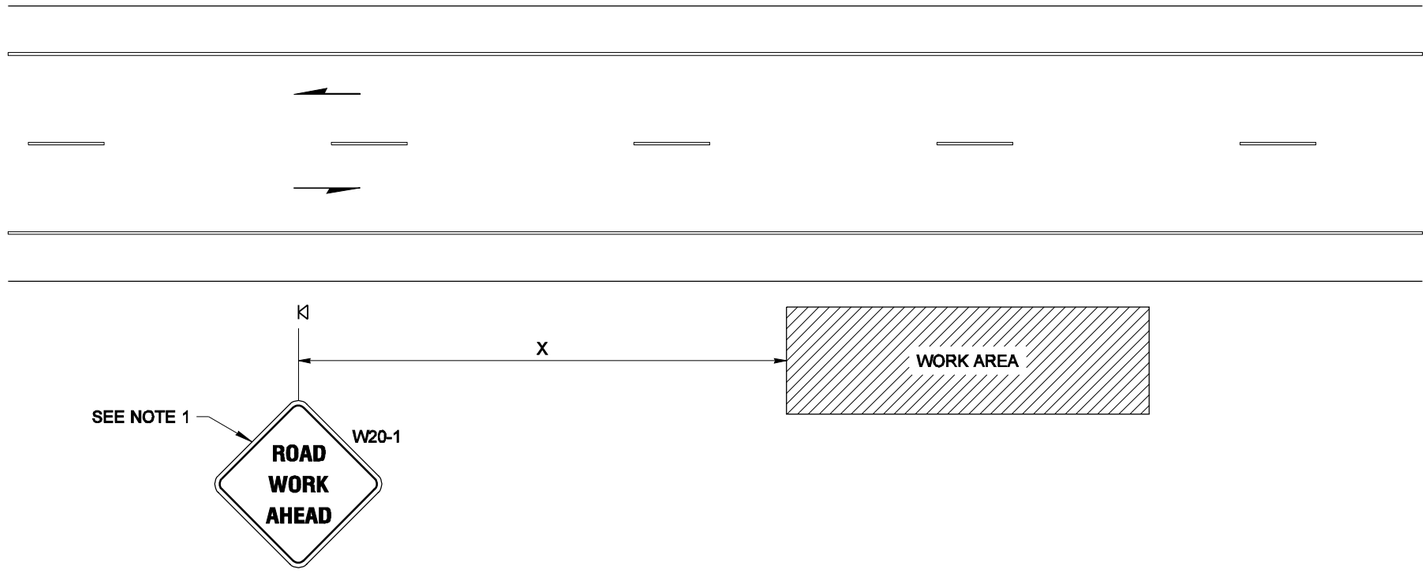

LEGEND

SIGN LOCATION

NOTES

1. The sign shown is not required in the following cases: the work space is behind a barrier, or more than 2' behind the curb, or more than 15' from the edge of a roadway.
2. For sign size, refer to Manual on Uniform Traffic Control Devices (MUTCD) and WSDOT Sign Fabrication Manual M55-05.

FOR LOCAL AGENCY USE ONLY
NOT FOR USE ON STATE ROUTES

THEODORE J. TREPANIER
STATE OF WASHINGTON
25335
REGISTERED
PROFESSIONAL ENGINEER

EXPIRES AUGUST 9, 2007

NOTE: THIS PLAN IS NOT A LEGAL ENGINEERING DOCUMENT BUT AN ELECTRONIC DUPLICATE. THE ORIGINAL, SIGNED BY THE ENGINEER AND APPROVED FOR PUBLICATION, IS KEPT ON FILE AT THE WASHINGTON STATE DEPARTMENT OF TRANSPORTATION. A COPY MAY BE OBTAINED UPON REQUEST.

WORK BEYOND THE SHOULDER

STANDARD PLAN K-40.80-00

SHEET 1 OF 1 SHEET

APPROVED FOR PUBLICATION

Ken L. Smith — STATE DESIGN ENGINEER

02-15-07 — DATE

Washington State Department of Transportation

EFFECTIVE: APRIL 2, 2007 TO JANUARY 6, 2008

EFFECTIVE: APRIL 2, 2007 TO JANUARY 6, 2008

DRAWN BY: ELENA BRUNSTEIN

INSTALL THESE OR OTHER WARNING SIGNS AS NEEDED FOR THE SPECIFIC HAZARD

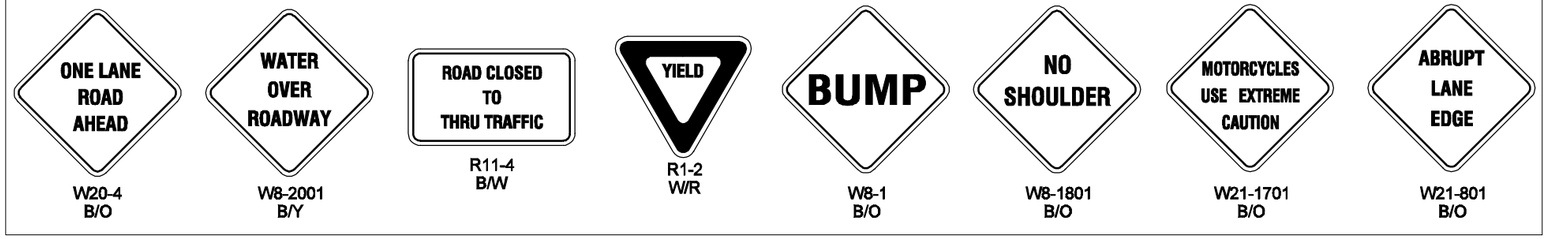

NOTES

1. Implement this plan when the initial roadway assessment is complete and determined to be passable with caution.
2. Portable Changeable Message Sign (PCMS) ~ recommended. For one-lane two-way traffic situations (see Standard Plan K-20.40) for additional details.
3. Spot hazards shall be marked with barricades or channelizing devices to alert motorists.
4. For signs size refer to Manual on Uniform Traffic Control Devices (MUTCD) and WSDOT Sign Fabrication Manual M55-05.

PCMS SAMPLE MESSAGE	
1	2
CAUTION STORM DEBRIS	ON ROAD NEXT XX MILES
1.5 SEC	1.5 SEC

FIELD LOCATE IN ADVANCE OF HAZARD

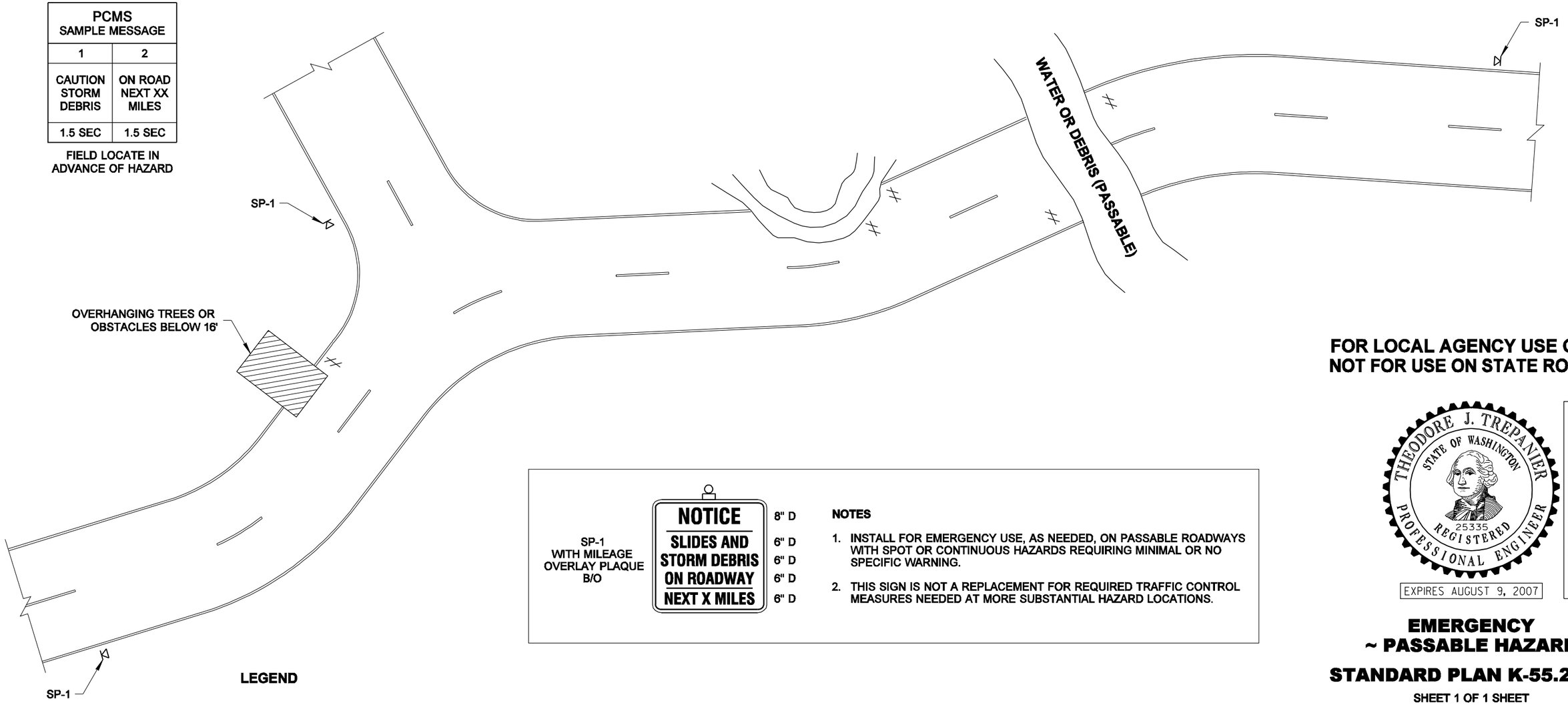

SP-1 WITH MILEAGE OVERLAY PLAQUE B/O

NOTES

1. INSTALL FOR EMERGENCY USE, AS NEEDED, ON PASSABLE ROADWAYS WITH SPOT OR CONTINUOUS HAZARDS REQUIRING MINIMAL OR NO SPECIFIC WARNING.
2. THIS SIGN IS NOT A REPLACEMENT FOR REQUIRED TRAFFIC CONTROL MEASURES NEEDED AT MORE SUBSTANTIAL HAZARD LOCATIONS.

LEGEND

- SIGN LOCATION
- TYPE 2 BARRICADE WITH TYPE "A" WARNING LIGHT OR CHANNELIZING DEVICE
- FLASHING WARNING LIGHT

FOR LOCAL AGENCY USE ONLY
NOT FOR USE ON STATE ROUTES

EXPIRES AUGUST 9, 2007

NOTE: THIS PLAN IS NOT A LEGAL ENGINEERING DOCUMENT BUT AN ELECTRONIC DUPLICATE. THE ORIGINAL, SIGNED BY THE ENGINEER AND APPROVED FOR PUBLICATION, IS KEPT ON FILE AT THE WASHINGTON STATE DEPARTMENT OF TRANSPORTATION. A COPY MAY BE OBTAINED UPON REQUEST.

EMERGENCY ~ PASSABLE HAZARD

STANDARD PLAN K-55.20-00

SHEET 1 OF 1 SHEET

APPROVED FOR PUBLICATION

Ken L. Smith — STATE DESIGN ENGINEER
02-15-07 — DATE

Washington State Department of Transportation

EFFECTIVE: APRIL 2, 2007 TO JANUARY 6, 2008

EFFECTIVE: APRIL 2, 2007 TO JANUARY 6, 2008

DRAWN BY: ELENA BRUNSTEIN

DECELERATION LENGTH = D (MIN.)						
POSTED SPEED (MPH)	ADVISORY SPEED LIMIT (MPH)					
	10	20	30	40	50	60
70	525	500	425	350	250	150
65	425	400	350	175		
60	350	300	250	175		
55	275	225	175	100		
50	200	150	100			
45	125					

SIGN SPACING = X (1)		
RURAL HIGHWAYS	60 / 65 MPH	800' ±
RURAL ROADS	45 / 55 MPH	500' ±
RURAL ROADS & URBAN ARTERIALS	35 / 40 MPH	350' ±
RURAL ROADS, URBAN ARTERIALS, RESIDENTIAL & BUSINESS DISTRICTS	25 / 30 MPH	200' ± (2)
URBAN STREETS	25 MPH OR LESS	100' ± (2)
ALL SIGNS ARE BLACK ON ORANGE UNLESS DESIGNATED OTHERWISE		

(1) ALL SIGN SPACING MAY BE ADJUSTED TO ACCOMMODATE AT-GRADE INTERSECTIONS AND DRIVEWAYS.

(2) THIS SIGN SPACING MAY BE REDUCED IN URBAN AREAS TO FIT ROADWAY CONDITIONS.

NOTES

1. Install additional Warning Signs based on site conditions and traffic characteristics. See an appropriate Standard Plan for guidance.
2. Regulatory Speed Limit signs are not a substitute for Work Zone Warning signs. Speed Limit signs shall remain in place as long as the reduced speed condition applies.
3. Motorcycle Warning Signs are required as per Washington Administrative Code (WAC) 468-95-305.
4. Closing a road and restricting traffic shall conform to Revised Code of Washington (RCW) 47.48.
5. For signs size refer to Manual on Uniform Traffic Control Devices (MUTCD) and WSDOT Sign Fabrication Manual M55-05.

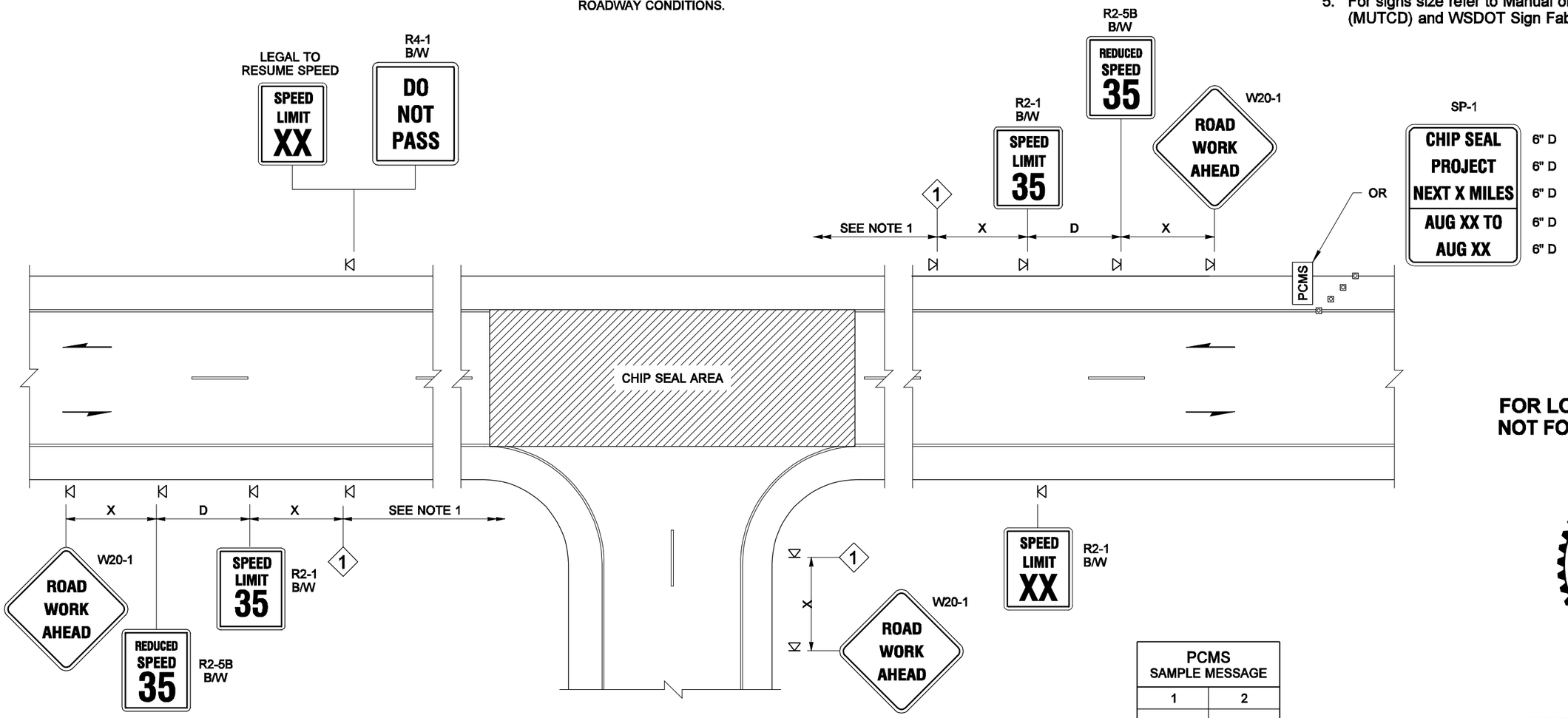

LEGEND

- SIGN LOCATION
- CHANNELIZING DEVICES
- PCMS — PORTABLE CHANGEABLE MESSAGE SIGN

1 — LOOSE GRAVEL 35 (SP-2 B/W); MOTORCYCLES USE EXTREME CAUTION (W21-1701 OR OTHER APPROPRIATE WARNING SIGN DEPENDING ON SITE CONDITIONS)

PCMS SAMPLE MESSAGE	
1	2
CHIP SEAL PROJECT	FROM AUG XX TO AUG XX
1.5 SEC	1.5 SEC

FIELD LOCATE IN ADVANCE OF SIGNING

FOR LOCAL AGENCY USE ONLY
NOT FOR USE ON STATE ROUTES

THEODORE J. TREPANIER — STATE OF WASHINGTON — 25335 — REGISTERED PROFESSIONAL ENGINEER

EXPIRES AUGUST 9, 2007

NOTE: THIS PLAN IS NOT A LEGAL ENGINEERING DOCUMENT BUT AN ELECTRONIC DUPLICATE. THE ORIGINAL, SIGNED BY THE ENGINEER AND APPROVED FOR PUBLICATION, IS KEPT ON FILE AT THE WASHINGTON STATE DEPARTMENT OF TRANSPORTATION. A COPY MAY BE OBTAINED UPON REQUEST.

SPEED ZONE SUPPLEMENTAL SIGNING ~ CHIP SEAL PROJECT STANDARD PLAN K-60.20-00

SHEET 1 OF 1 SHEET

APPROVED FOR PUBLICATION

Ken L. Smith — STATE DESIGN ENGINEER — *02-15-07* — DATE

Washington State Department of Transportation

EFFECTIVE: APRIL 2, 2007 TO JANUARY 6, 2008

EFFECTIVE: APRIL 2, 2007 TO JANUARY 6, 2008
EFFECTIVE: APRIL 2, 2007 TO JANUARY 6, 2008

DRAWN BY: ELENA BRUNSTEIN

SIGN SPACING = X (1)		
RURAL HIGHWAYS	60 / 65 MPH	800' ±
RURAL ROADS	45 / 55 MPH	500' ±
RURAL ROADS & URBAN ARTERIALS	35 / 40 MPH	350' ±
RURAL ROADS, URBAN ARTERIALS, RESIDENTIAL & BUSINESS DISTRICTS	25 / 30 MPH	200' ± (2)
URBAN STREETS	25 MPH OR LESS	100' ± (2)
ALL SIGNS ARE BLACK ON ORANGE UNLESS DESIGNATED OTHERWISE		

(1) ALL SIGN SPACING MAY BE ADJUSTED TO ACCOMMODATE INTERCHANGE RAMPS, AT-GRADE INTERSECTIONS, AND DRIVEWAYS.

(2) THIS SIGN SPACING MAY BE REDUCED IN URBAN AREAS TO FIT ROADWAY CONDITIONS.

CHANNELIZING DEVICE SPACING		
POSTED SPEED (MPH)	IN TAPER (FEET)	IN TANGENT (FEET)
50 / 70	40	80
35 / 45	30	60
25 / 30	20	40

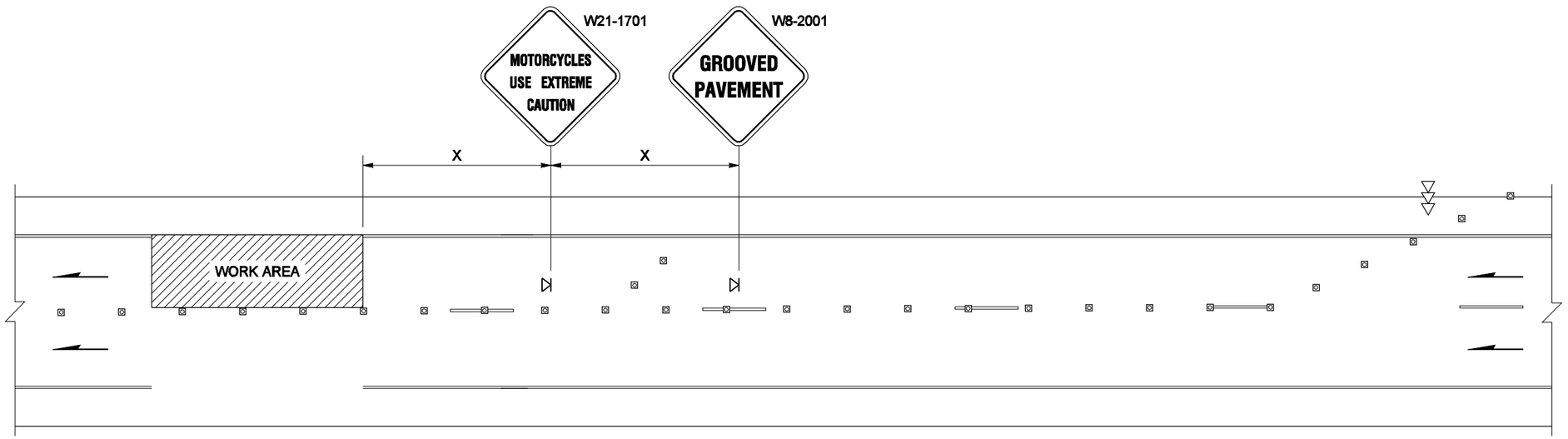

LEGEND

- SIGN LOCATION
- CHANNELIZING DEVICES
- ARROW PANEL

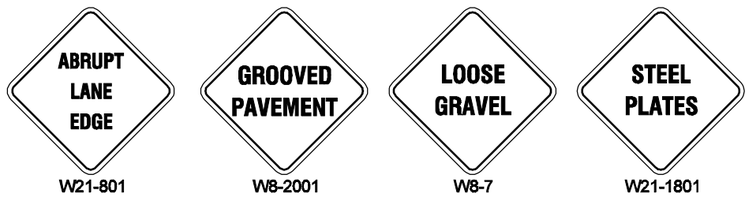

MOTORCYCLE WARNING SIGN (W21-1701) SHOULD BE INSTALLED AT 1 MILE SPACING, THROUGHOUT THE WORK ZONE WHERE THE CONDITION EXISTS, AS PART OF THE SEQUENCE OF OTHER APPROPRIATE STANDARD WARNING SIGNS ON 1 MILE SPACING

NOTES

1. See Standard Plan K-24.60 for typical lane closure signing details, device spacing requirements, and lane closure taper length.
2. MOTOCYCLES USE EXTREME CAUTION signs shall be installed when the following roadway conditions exist:
   - grooved pavement
   - abrupt lane edge
   - steel plates
   - loose gravel of earth

   Specific signs for each of the conditions noted shall be installed along with MOTORCYCLES USE EXTREME CAUTION signs.
3. For signs size refer to Manual on Uniform Traffic Control Devices (MUTCD) and WSDOT Sign Fabrication Manual M55-05.

FOR LOCAL AGENCY USE ONLY
NOT FOR USE ON STATE ROUTES

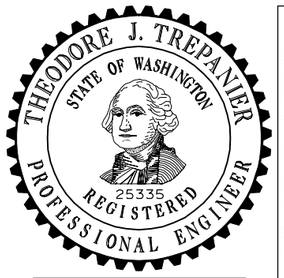

NOTE: THIS PLAN IS NOT A LEGAL ENGINEERING DOCUMENT BUT AN ELECTRONIC DUPLICATE. THE ORIGINAL, SIGNED BY THE ENGINEER AND APPROVED FOR PUBLICATION, IS KEPT ON FILE AT THE WASHINGTON STATE DEPARTMENT OF TRANSPORTATION. A COPY MAY BE OBTAINED UPON REQUEST.

MOTORCYCLE SUPPLEMENTAL SIGNING

STANDARD PLAN K-60.40-00

SHEET 1 OF 1 SHEET

APPROVED FOR PUBLICATION

Ken L. Smith — STATE DESIGN ENGINEER
02-15-07 — DATE

Washington State Department of Transportation

EFFECTIVE: APRIL 2, 2007 TO JANUARY 6, 2008
EFFECTIVE: APRIL 2, 2007 TO JANUARY 6, 2008

EFFECTIVE: APRIL 2, 2007 TO JANUARY 6, 2008

DRAWN BY: ELENA BRUNSTEIN

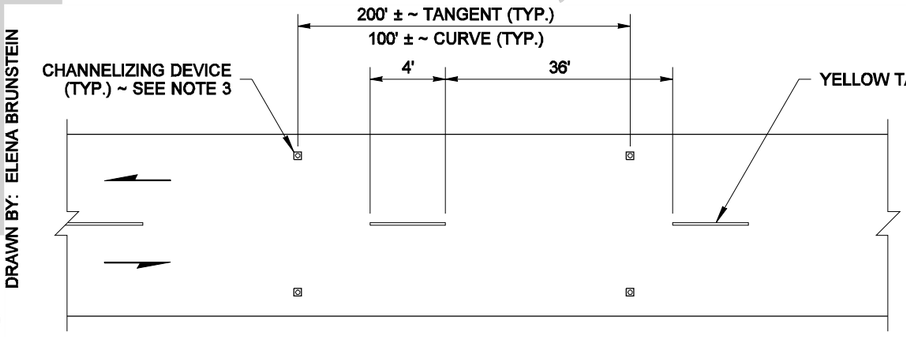

HOT MIXED ASPHALT PAVEMENT

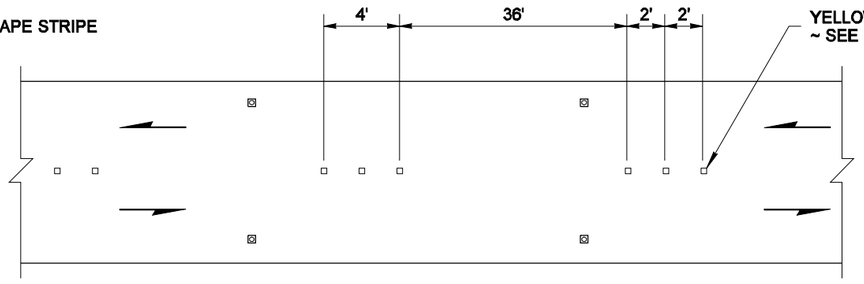

BITUMINOUS SURFACE TREATMENT

TWO-LANE ROADWAY

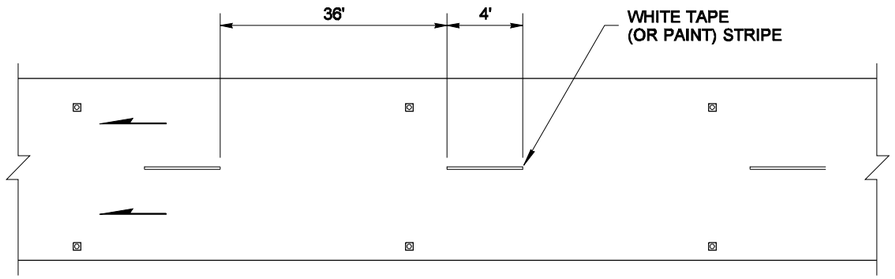

HOT MIXED ASPHALT PAVEMENT

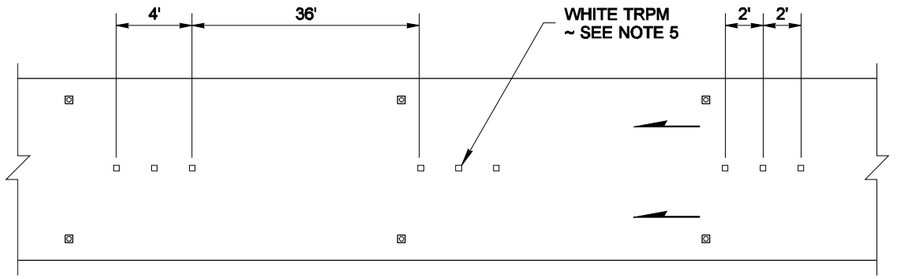

BITUMINOUS SURFACE TREATMENT

ONE-WAY TWO-LANE ROADWAY

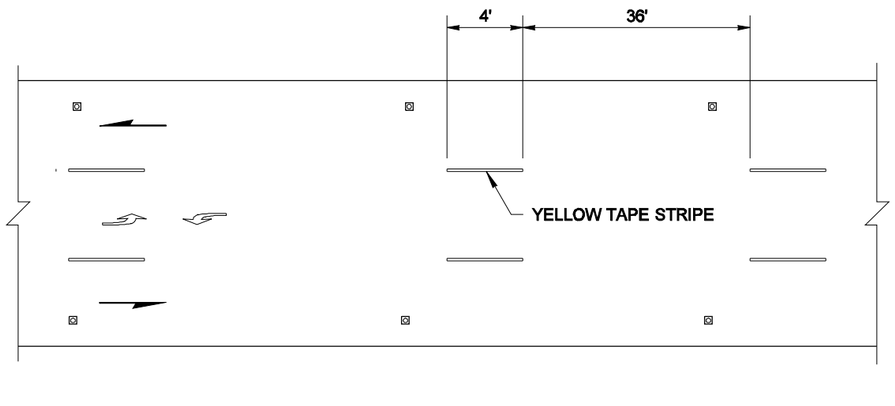

HOT MIXED ASPHALT PAVEMENT

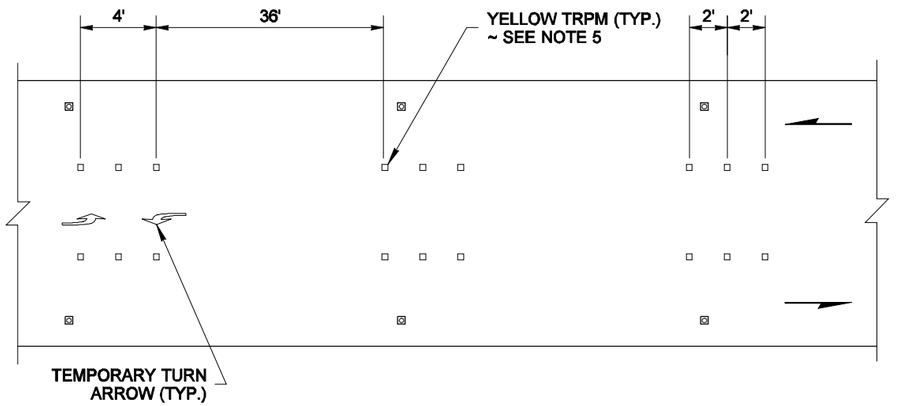

BITUMINOUS SURFACE TREATMENT

TWO-WAY TWO-LANE LEFT TURN ROADWAY

NOTES

1. For long term projects conflicting pavement markings that are no longer applicable shall be removed or obliterated. Temporary markings shall be used as necessary.
2. For Hot Mixed Asphalt Pavement, a temporary striping tape shall be installed in conjunction with DO NOT PASS and "PASS WITH CARE" sign locations.
3. Temporary roadside delineation with Channelization Devices is optional. The appropriate taper length shall be L/2. See Standard Plan K-24.20 for minimum taper length (L).
4. For long term projects a channelization/pavement marking plan should be implemented.
5. Temporary Raised Pavement Marker (TRPM) may be used on a pattern spacing 5' O.C. to simulate a solid line.



EXPIRES AUGUST 9, 2007

NOTE: THIS PLAN IS NOT A LEGAL ENGINEERING DOCUMENT BUT AN ELECTRONIC DUPLICATE. THE ORIGINAL, SIGNED BY THE ENGINEER AND APPROVED FOR PUBLICATION, IS KEPT ON FILE AT THE WASHINGTON STATE DEPARTMENT OF TRANSPORTATION. A COPY MAY BE OBTAINED UPON REQUEST.

TEMPORARY CHANNELIZATION

STANDARD PLAN K-70.20-00

SHEET 1 OF 1 SHEET

APPROVED FOR PUBLICATION

Ken L. Smith — STATE DESIGN ENGINEER

02-15-07 — DATE

Washington State Department of Transportation

EFFECTIVE: APRIL 2, 2007 TO JANUARY 6, 2008

EFFECTIVE: APRIL 2, 2007 TO JANUARY 6, 2008

DRAWN BY: FERN LIDDELL

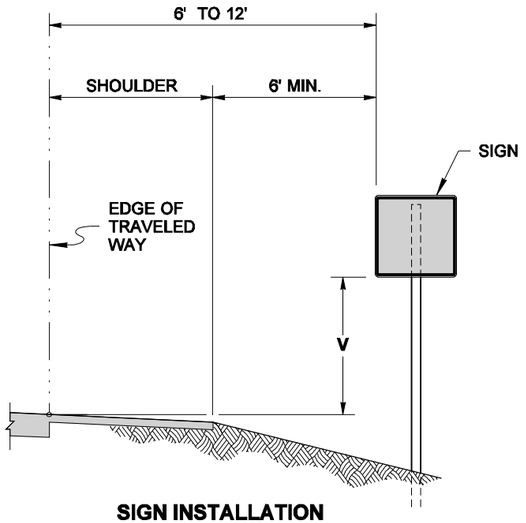

SIGN INSTALLATION (FILL SECTION)

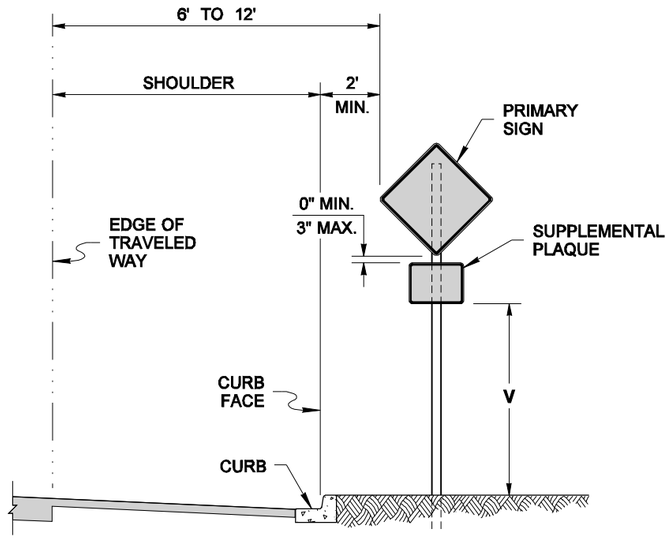

SIGN INSTALLATION (CURB SECTION)

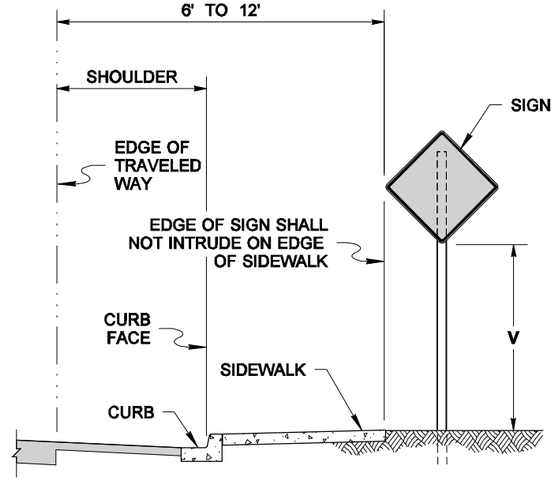

SIGN INSTALLATION (SIDEWALK AND CURB SECTION)

NOTES

1. For sign installation details, see Std. Plan G - series.
2. In rural areas, the "V" Height can be a minimum of 7 feet for primary signs and 6 feet for the supplemental plaques for greater visibility, as directed by the engineer.
3. The "V" height for signs, with an area of more than 50 square feet and two or more sign supports, is 7 feet in both rural and urban areas.

HEIGHT V		
	TO BOTTOM OF SIGN (NO SUPPLEMENTAL PLAQUE)	TO BOTTOM OF SUPPLEMENTAL PLAQUE (WHEN REQUIRED)
RURAL	5' MINIMUM	4' MINIMUM
URBAN	7' MINIMUM	6' MINIMUM

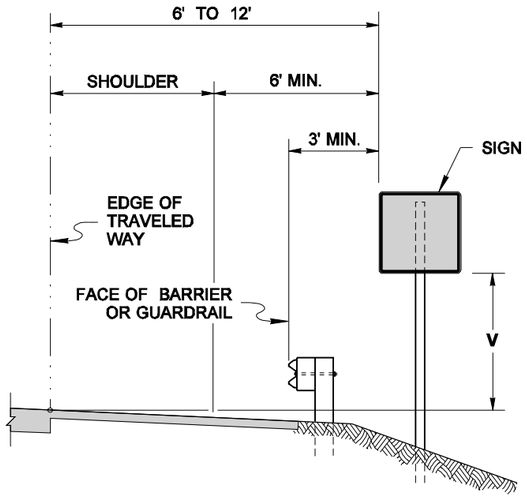

SIGN INSTALLATION (BEHIND TRAFFIC BARRIER)

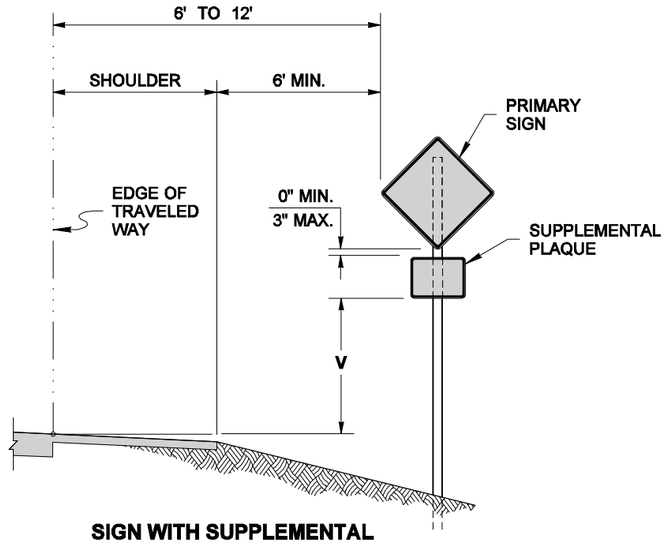

SIGN WITH SUPPLEMENTAL PLAQUE INSTALLATION (FILL SECTION)

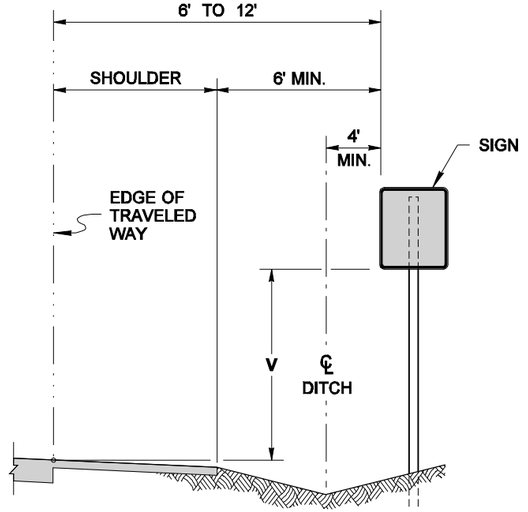

SIGN INSTALLATION (DITCH SECTION)



EXPIRES AUGUST 9, 2007

NOTE: THIS PLAN IS NOT A LEGAL ENGINEERING DOCUMENT BUT AN ELECTRONIC DUPLICATE. THE ORIGINAL, SIGNED BY THE ENGINEER AND APPROVED FOR PUBLICATION, IS KEPT ON FILE AT THE WASHINGTON STATE DEPARTMENT OF TRANSPORTATION. A COPY MAY BE OBTAINED UPON REQUEST.

CLASS A CONSTRUCTION SIGNING INSTALLATION

STANDARD PLAN K-80.10-00

SHEET 1 OF 1 SHEET

APPROVED FOR PUBLICATION

Ken L. Smith — STATE DESIGN ENGINEER

02-21-07 — DATE

Washington State Department of Transportation

EFFECTIVE: APRIL 2, 2007 TO JANUARY 6, 2008

EFFECTIVE: APRIL 2, 2007 TO JANUARY 6, 2008

DRAWN BY: LISA CYFORD

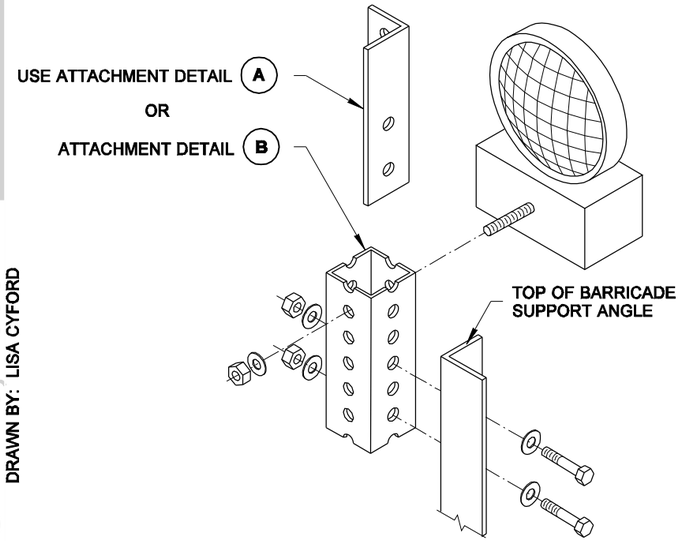

WARNING LIGHT ATTACHMENT DETAIL

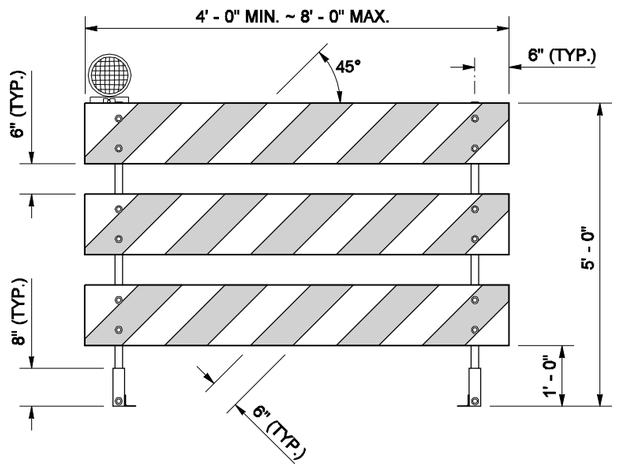

ELEVATION

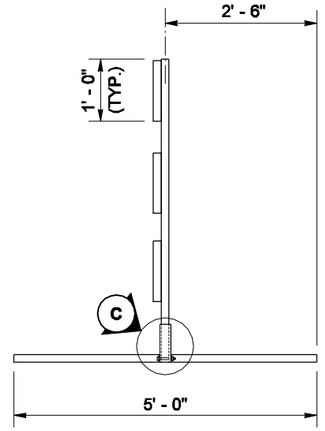

SIDE

TYPE 3 BARRICADE

NOTES

1. All fasteners may be zinc plated, galvanized or stainless steel. All steel angle and tubular steel shall be hot-rolled, high carbon steel, painted or galvanized.
2. Install one lightweight Type A Low-Intensity flashing warning light on the traffic side of the barricade. Install two Type A Low-Intensity flashing warning lights per barricade when the barricades are used to close a roadway. Attach the light to the barricade according to the light manufacturer's recommendations or use the details shown on this plan.
3. Stripes on barricade rails shall be alternating orange and white retroreflective stripes (sloping downward at an angle of 45 degrees in the direction traffic is to pass).
4. The Type 3 barricade design shown on this plan meets the crash test requirements of NCHRP 350. Alternative designs may be approved if they conform to the NCHRP 350 crash test criteria and the MUTCD.
5. When a sign is mounted on the barricade, it shall be securely bolted to at least two plywood panels. The top of the sign shall not be higher than the top panel of the barricade.
6. When sandbags are used in freezing weather, Urea fertilizer shall be mixed with the sand in a quantity to prevent the sand from freezing.

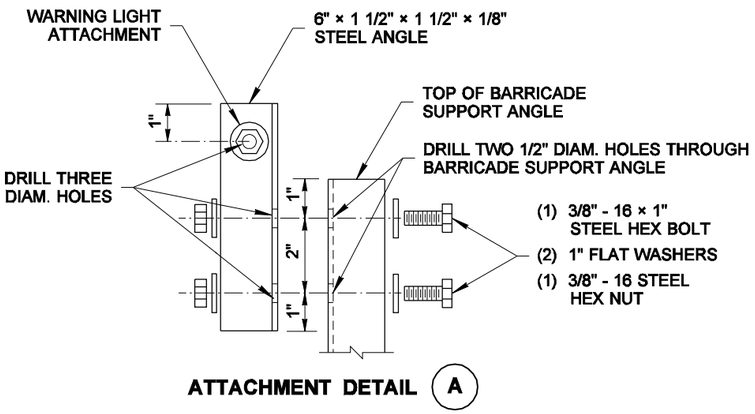

ATTACHMENT DETAIL A

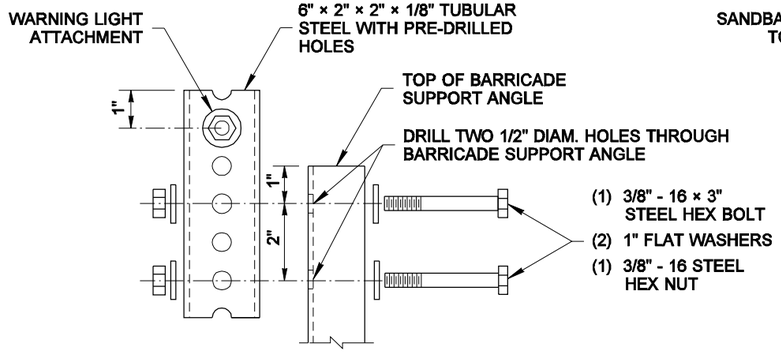

ATTACHMENT DETAIL B

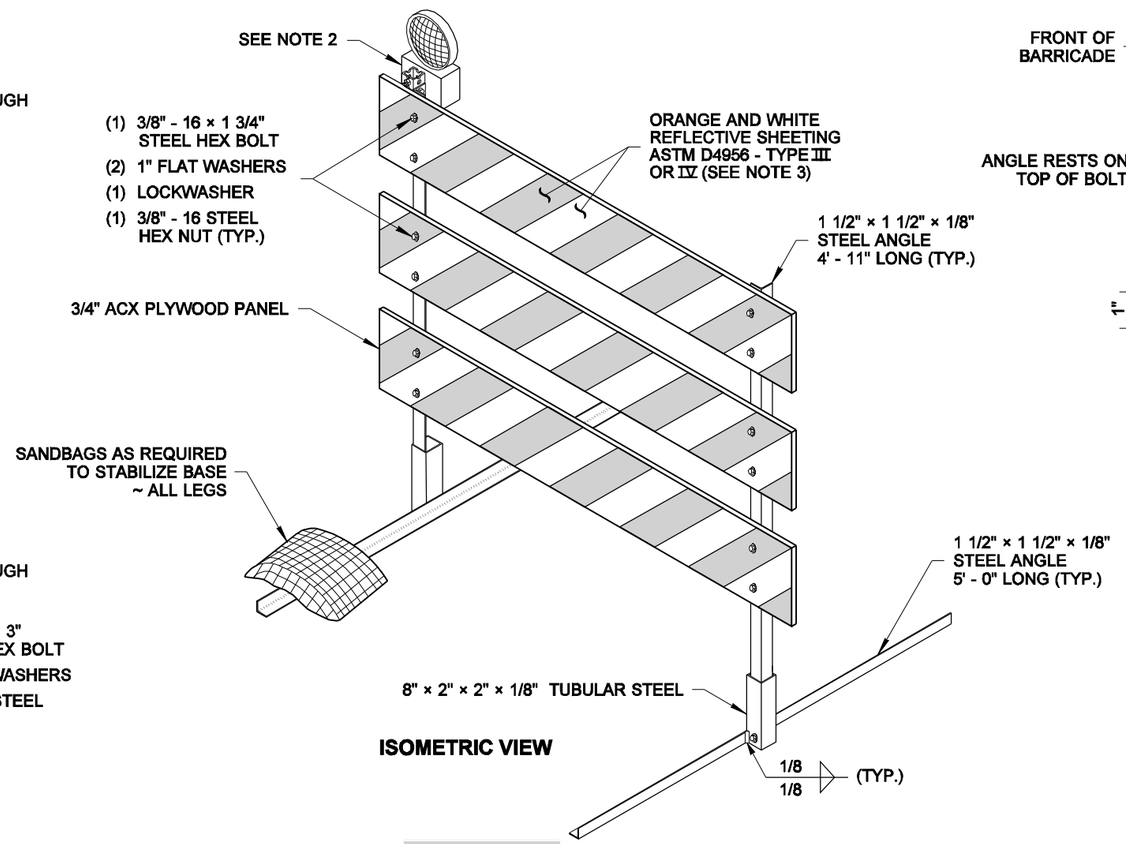

ISOMETRIC VIEW

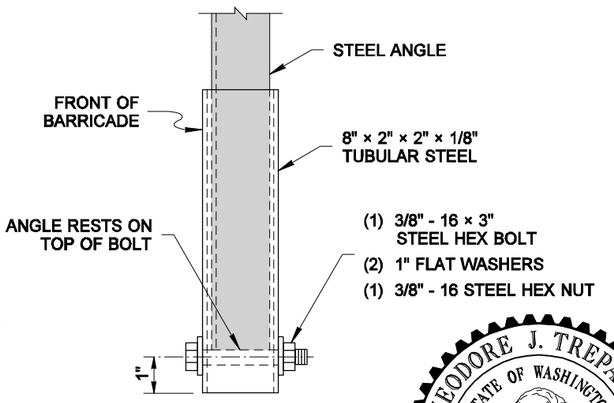

DETAIL C

THEODORE J. TREPANIER
STATE OF WASHINGTON
25335
REGISTERED
PROFESSIONAL ENGINEER

EXPIRES AUGUST 9, 2007

NOTE: THIS PLAN IS NOT A LEGAL ENGINEERING DOCUMENT BUT AN ELECTRONIC DUPLICATE. THE ORIGINAL, SIGNED BY THE ENGINEER AND APPROVED FOR PUBLICATION, IS KEPT ON FILE AT THE WASHINGTON STATE DEPARTMENT OF TRANSPORTATION. A COPY MAY BE OBTAINED UPON REQUEST.

TYPE 3 BARRICADE

STANDARD PLAN K-80.20-00

SHEET 1 OF 2 SHEETS

APPROVED FOR PUBLICATION

Kevin J. Dayton — STATE DESIGN ENGINEER — *12-20-06* — DATE

Washington State Department of Transportation

EFFECTIVE: APRIL 2, 2007 TO JANUARY 6, 2008

EFFECTIVE: APRIL 2, 2007 TO JANUARY 6, 2008

EFFECTIVE: APRIL 2, 2007 TO JANUARY 6, 2008

EFFECTIVE: APRIL 2, 2007 TO JANUARY 6, 2008

DRAWN BY: LISA CYFORD

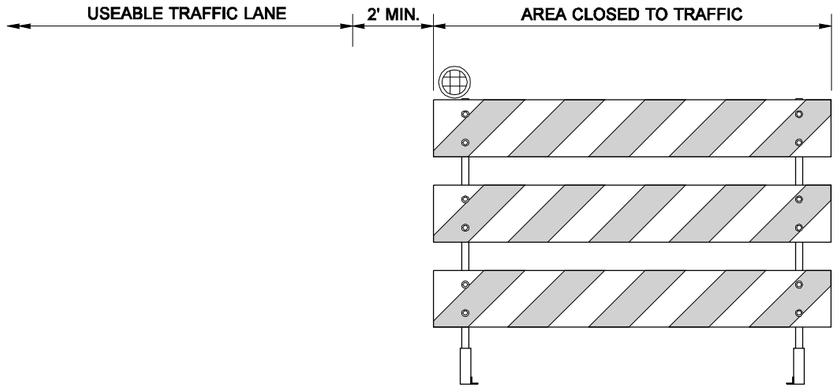

TYPE 3L BARRICADE

STRIPES ON THE BARRICADES SHALL SLOPE DOWNWARD IN THE DIRECTION TRAFFIC IS TO PASS

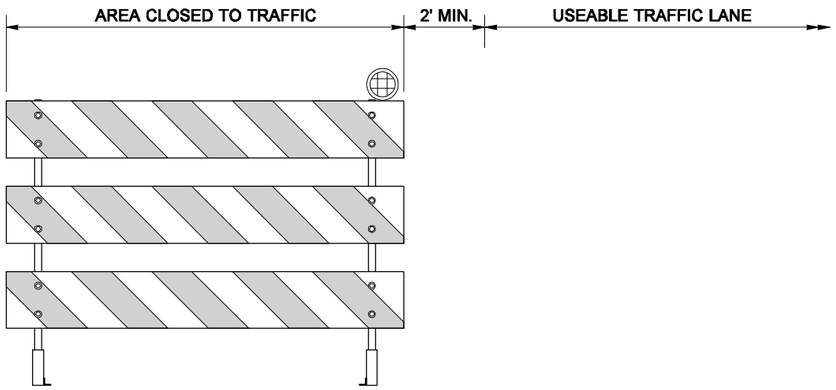

TYPE 3R BARRICADE

BARRICADE PLACEMENT

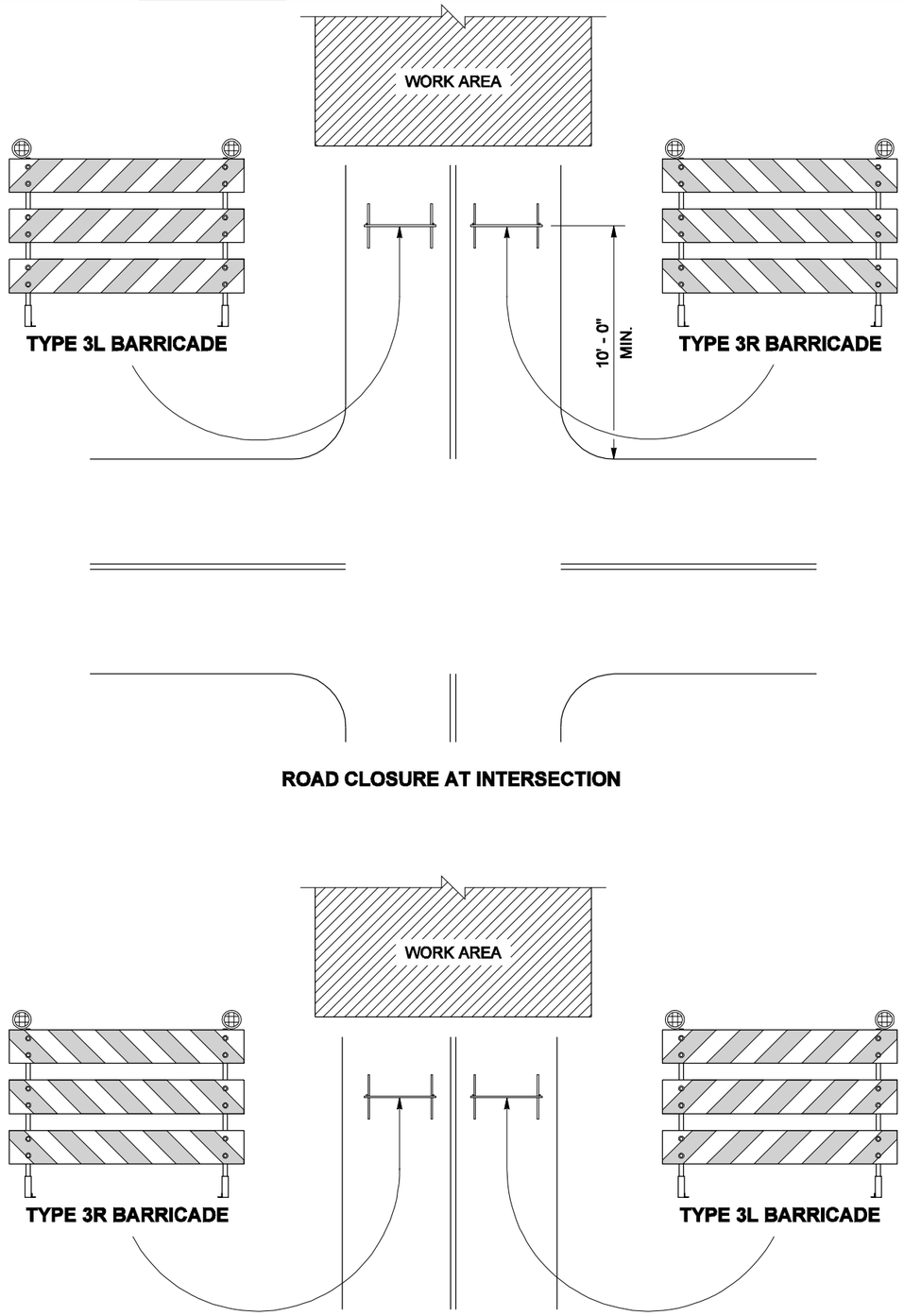

ROAD CLOSURE AT INTERSECTION

ROAD CLOSURE AT OTHER LOCATIONS

THEODORE J. TREPANIER
STATE OF WASHINGTON
25335
REGISTERED
PROFESSIONAL ENGINEER

EXPIRES AUGUST 9, 2007

NOTE: THIS PLAN IS NOT A LEGAL ENGINEERING DOCUMENT BUT AN ELECTRONIC DUPLICATE. THE ORIGINAL, SIGNED BY THE ENGINEER AND APPROVED FOR PUBLICATION, IS KEPT ON FILE AT THE WASHINGTON STATE DEPARTMENT OF TRANSPORTATION. A COPY MAY BE OBTAINED UPON REQUEST.

TYPE 3 BARRICADE

STANDARD PLAN K-80.20-00

SHEET 2 OF 2 SHEETS

APPROVED FOR PUBLICATION

Kevin J. Dayton — *12-20-06*

STATE DESIGN ENGINEER — DATE

Washington State Department of Transportation

EFFECTIVE: APRIL 2, 2007 TO JANUARY 6, 2008

EFFECTIVE: APRIL 2, 2007 TO JANUARY 6, 2008

EFFECTIVE: APRIL 2, 2007 TO JANUARY 6, 2008
EFFECTIVE: APRIL 2, 2007 TO JANUARY 6, 2008

DRAWN BY: MARK SUJKA

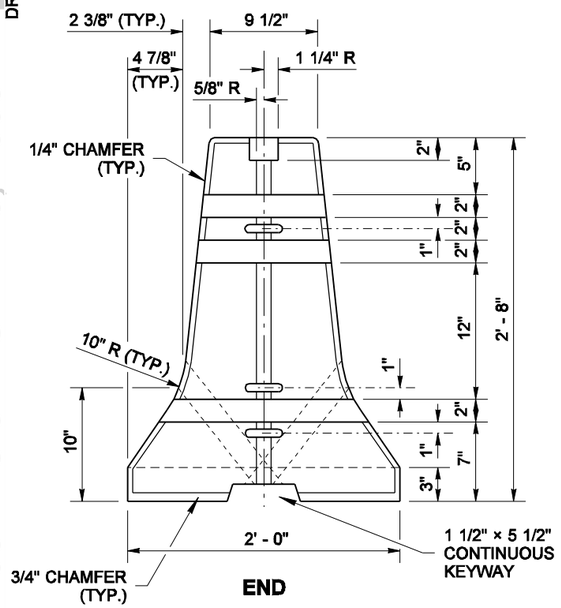

END

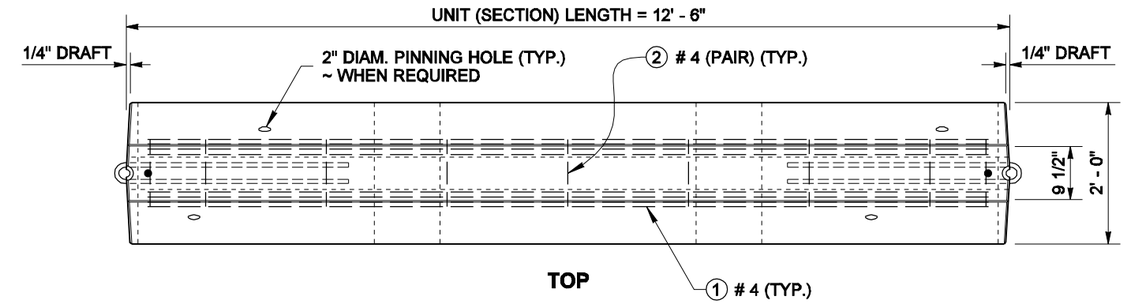

TOP

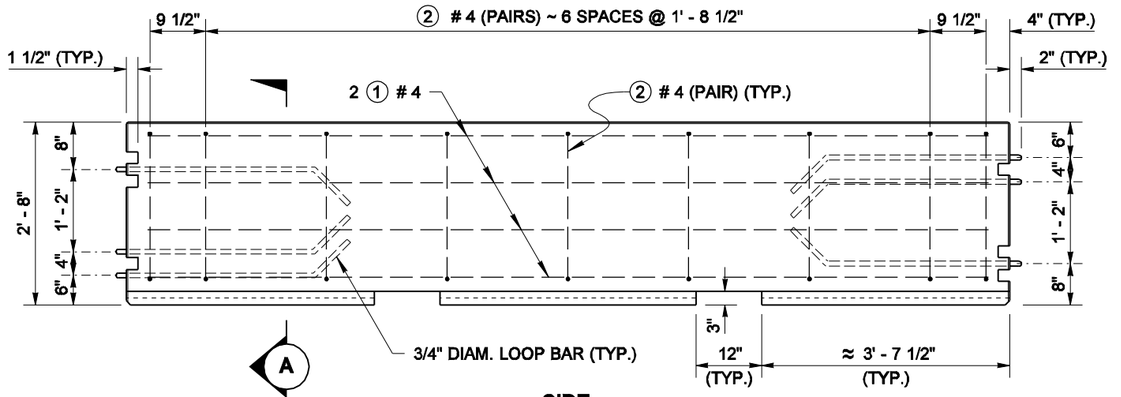

SIDE

NOTES

1. The reinforcing steel details for the NARROW BASE barrier are the same as those shown for the 2' wide barrier except that the bars along the vertical face run vertically with a 1 1/2" clearance.

2. The vertical dimensions for the slots and loop bar locations on the NARROW BASE barrier are the same as those shown on the END views of the 2' wide barrier.

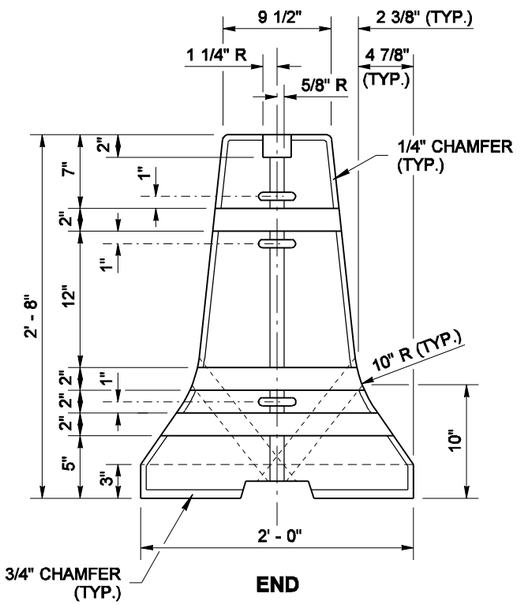

END

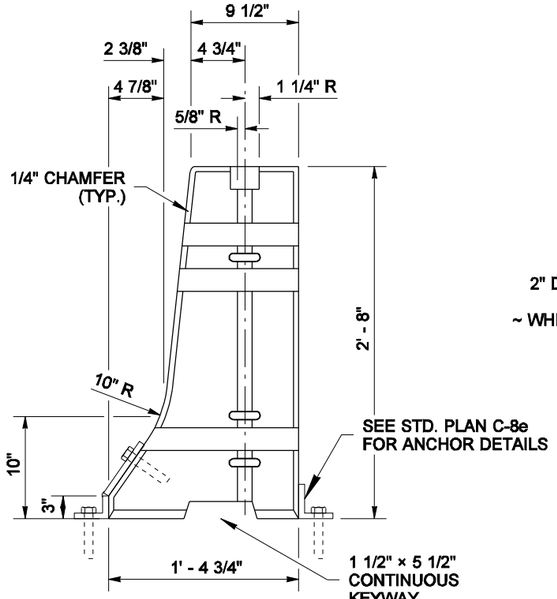

END

NARROW BASE

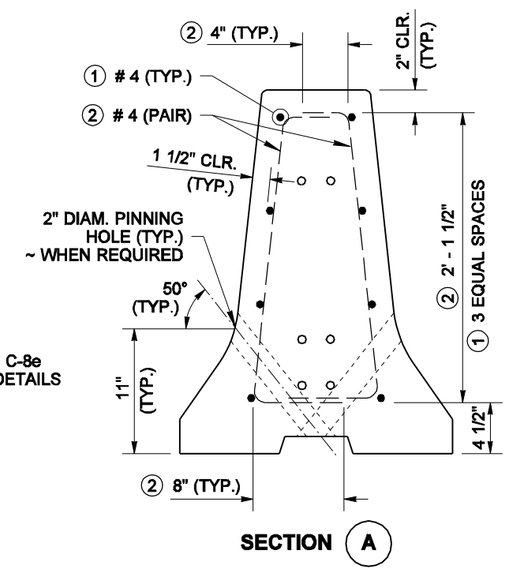

SECTION A

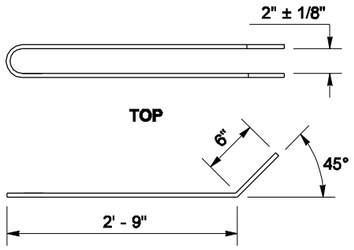

TOP

SIDE

ALTERNATIVE LOOP BAR
3/4" DIAM. (ASTM A 36)
HOT DIP GALVANIZE AFTER FABRICATION (ASTM A 123)

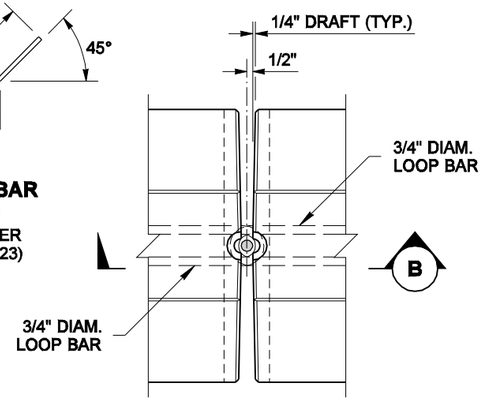

TOP

END DETAIL
JOINING TWO BARRIER SEGMENTS

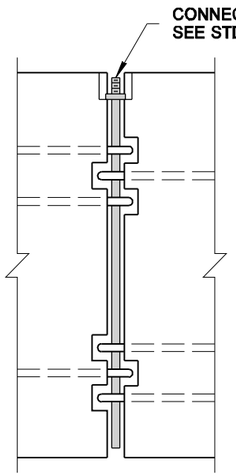

SECTION B

RICHARD BARSTOW ALBIN
STATE OF WASHINGTON
34042
REGISTERED
PROFESSIONAL ENGINEER

EXPIRES JULY 24, 2008

NOTE: THIS PLAN IS NOT A LEGAL ENGINEERING DOCUMENT BUT AN ELECTRONIC DUPLICATE. THE ORIGINAL, SIGNED BY THE ENGINEER AND APPROVED FOR PUBLICATION, IS KEPT ON FILE AT THE WASHINGTON STATE DEPARTMENT OF TRANSPORTATION. A COPY MAY BE OBTAINED UPON REQUEST.

ALTERNATIVE TEMPORARY CONC. BARRIER (F-SHAPE)

STANDARD PLAN K-80.30-00

SHEET 1 OF 1 SHEET

APPROVED FOR PUBLICATION

Ken L. Smith — STATE DESIGN ENGINEER

02-21-07 — DATE

Washington State Department of Transportation

EFFECTIVE: APRIL 2, 2007 TO JANUARY 6, 2008
EFFECTIVE: APRIL 2, 2007 TO JANUARY 6, 2008
EFFECTIVE: APRIL 2, 2007 TO JANUARY 6, 2008
EFFECTIVE: APRIL 2, 2007 TO JANUARY 6, 2008

EFFECTIVE: APRIL 2, 2007 TO JANUARY 6, 2008

EFFECTIVE: APRIL 2, 2007 TO JANUARY 6, 2008

EFFECTIVE: APRIL 2, 2007 TO JANUARY 6, 2008

DRAWN BY: MARK SUJKA

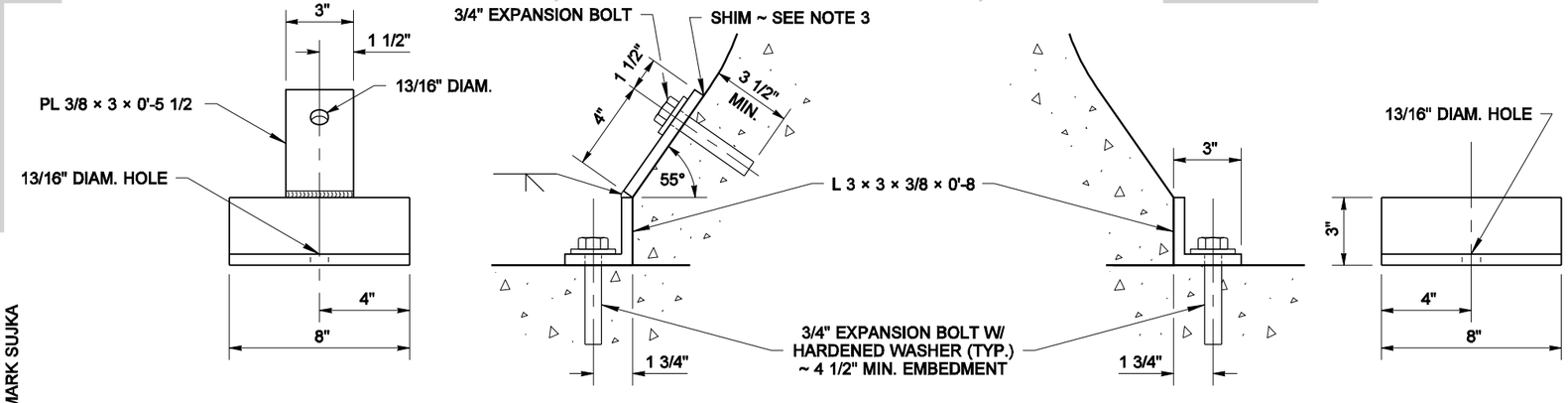

ATTACHMENT "A" DETAIL

ATTACHMENT "B" DETAIL

NOTES

1. Use Type 1 Anchors when the concrete pavement or bridge deck is 6" or thicker with 2' wide concrete barrier only. Use Type 2 Anchors (Standard Plan K-80.37) with narrow base barrier.
2. Adjust the location of the Type 1 Anchors to avoid the main reinforcing in the deck when drilling holes.
3. Use shims to properly fit the Type 1 Anchors to the barrier and roadway surfaces.
4. Upon removal of the Type 1 Anchors, clean the bolt holes and fill them with grout according to Standard Specification 6.02.3(20).
5. Remove the Type 3 Anchors by first driving the steel pins down through the barrier further into the pavement to allow lifting the barrier without interference, then remove the pins from the pavement.
6. After removing the Type 3 Anchors, clean the pin holes and fill them with sealant according to Standard Specification 9-04.2.

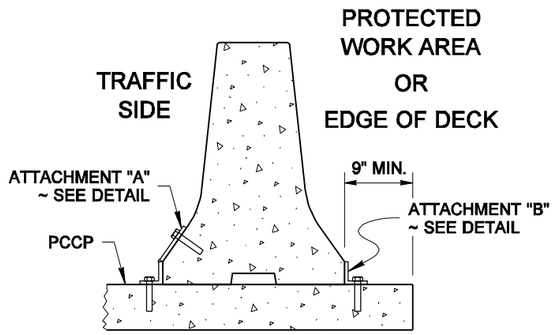

SECTION VIEWS
(F-SHAPE SHOWN)

TYPE 1 ANCHOR
ATTACHMENT LOCATIONS

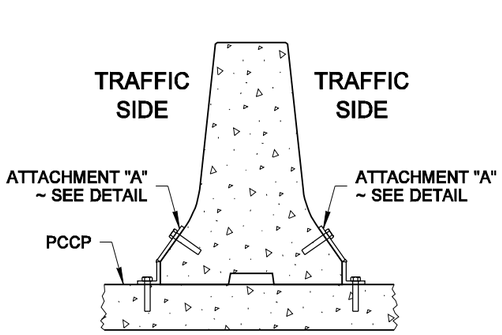

TYPE 1 ANCHOR
TEMPORARY INSTALLATION OF
PRECAST CONC. BARRIER TYPE 2 (STD. PLAN C-8) AND
TEMPORARY CONC. BARRIER (F-SHAPE) (STD. PLAN K-80.30)
ON CEMENT CONC. PAVEMENT OR BRIDGE DECK

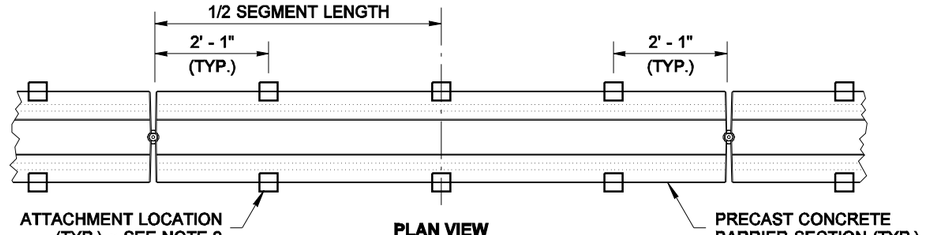

PLAN VIEW
TYPE 1 ANCHOR
ATTACHMENT LOCATIONS

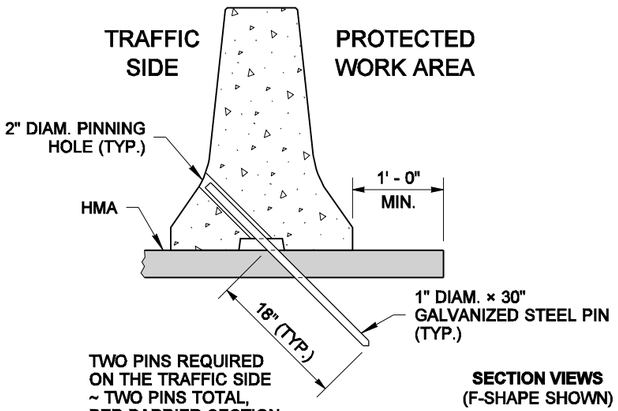

SECTION VIEWS
(F-SHAPE SHOWN)

TYPE 3 ANCHOR
PIN LOCATIONS

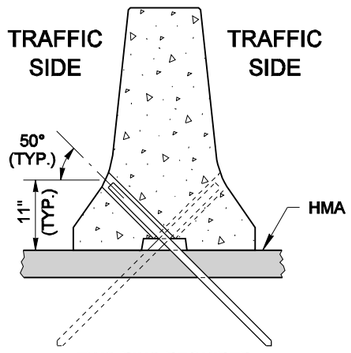

TYPE 3 ANCHOR
TEMPORARY INSTALLATION OF
PRECAST CONC. BARRIER TYPE 2 (STD. PLAN C-8) AND
TEMPORARY CONC. BARRIER (F-SHAPE) (STD. PLAN K-80.30)
ON HOT MIX ASPHALT PAVEMENT

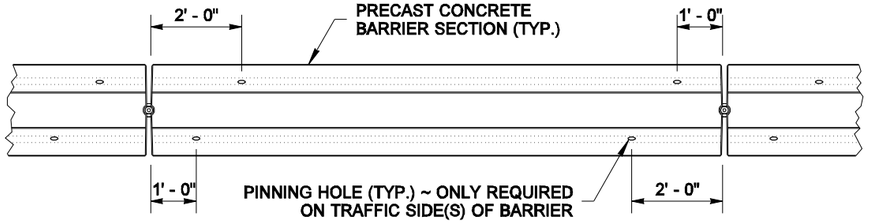

PLAN VIEW

TYPE 3 ANCHOR
PIN LOCATIONS

RICHARD BARSTOW ALBIN
STATE OF WASHINGTON
34042
REGISTERED
PROFESSIONAL ENGINEER

EXPIRES JULY 24, 2008

NOTE: THIS PLAN IS NOT A LEGAL ENGINEERING DOCUMENT BUT AN ELECTRONIC DUPLICATE. THE ORIGINAL, SIGNED BY THE ENGINEER AND APPROVED FOR PUBLICATION, IS KEPT ON FILE AT THE WASHINGTON STATE DEPARTMENT OF TRANSPORTATION. A COPY MAY BE OBTAINED UPON REQUEST.

TEMPORARY CONC. BARRIER ANCHORING

STANDARD PLAN K-80.35-00

SHEET 1 OF 1 SHEET

APPROVED FOR PUBLICATION

Ken L. Smith — STATE DESIGN ENGINEER
02-21-07 — DATE

Washington State Department of Transportation

EFFECTIVE: APRIL 2, 2007 TO JANUARY 6, 2008

EFFECTIVE: APRIL 2, 2007 TO JANUARY 6, 2008

EFFECTIVE: APRIL 2, 2007 TO JANUARY 6, 2008

EFFECTIVE: APRIL 2, 2007 TO JANUARY 6, 2008

DRAWN BY: MARK SUJKA

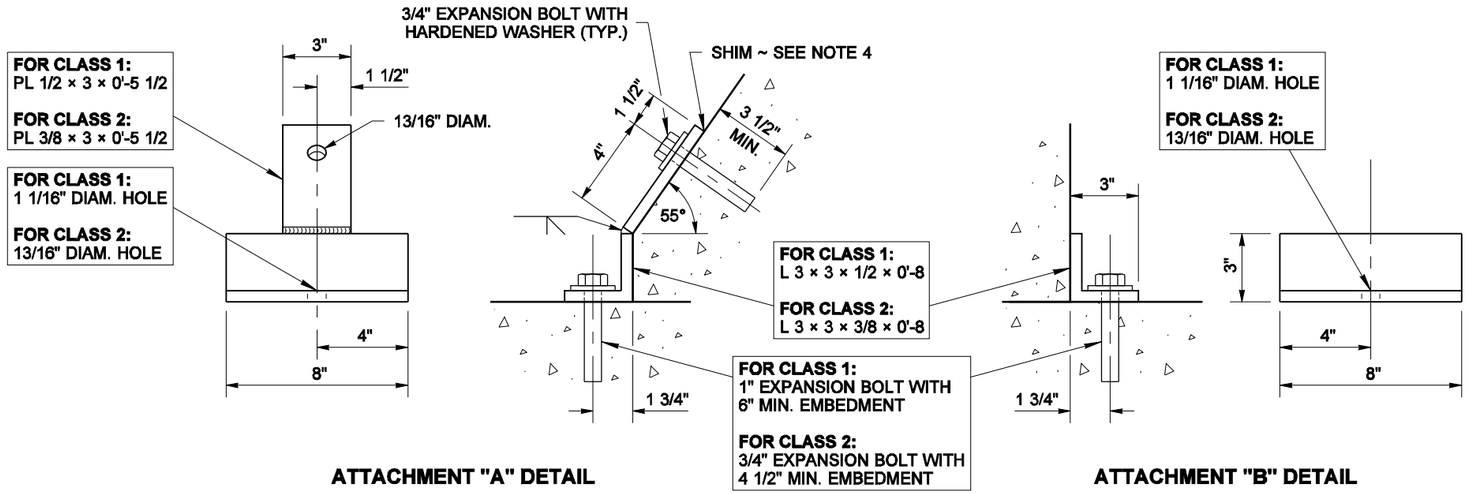

ATTACHMENT "A" DETAIL

ATTACHMENT "B" DETAIL

NOTES

1. The intended use of this plan is for the temporary installation of Alternative Temporary Concrete Barrier (F-Shape), Narrow Base (see Standard Plan K-80.30) on cement concrete pavement or bridge deck.
2. Use Class 1 when the concrete pavement or bridge deck is 9" or thicker; use Class 2 when it is 6" or thicker.
3. Adjust the location of the anchors to avoid the main reinforcing in the deck when drilling holes.
4. Use shims to properly fit the anchors to the barrier and roadway surfaces.
5. Upon removal of the anchors, clean the bolt holes and fill them with grout according to Standard Specification 6.02.3(20).

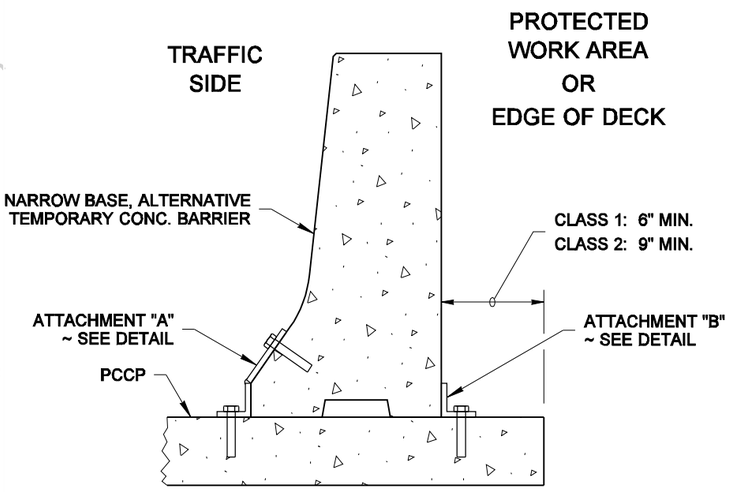

SECTION VIEW

TYPE 2 ANCHOR: CLASS 1 & 2
ATTACHMENT LOCATIONS

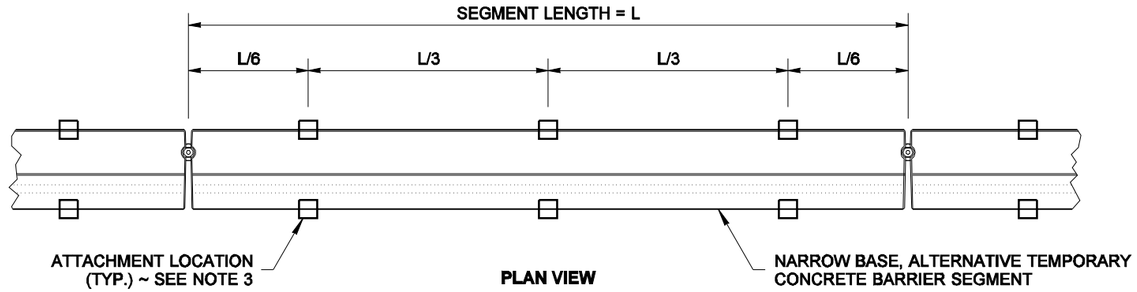

PLAN VIEW

TYPE 2 ANCHOR: CLASS 1
ATTACHMENT LOCATIONS

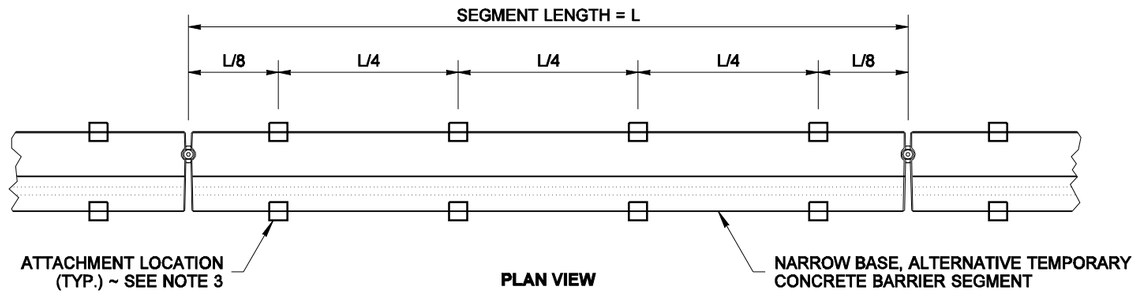

PLAN VIEW

TYPE 2 ANCHOR: CLASS 2
ATTACHMENT LOCATIONS

RICHARD BARSTOW ALBIN
STATE OF WASHINGTON
34042
REGISTERED
PROFESSIONAL ENGINEER

EXPIRES JULY 24, 2008

NOTE: THIS PLAN IS NOT A LEGAL ENGINEERING DOCUMENT BUT AN ELECTRONIC DUPLICATE. THE ORIGINAL, SIGNED BY THE ENGINEER AND APPROVED FOR PUBLICATION, IS KEPT ON FILE AT THE WASHINGTON STATE DEPARTMENT OF TRANSPORTATION. A COPY MAY BE OBTAINED UPON REQUEST.

TEMPORARY CONC. BARRIER ANCHORING ~ NARROW

STANDARD PLAN K-80.37-00

SHEET 1 OF 1 SHEET

APPROVED FOR PUBLICATION

Ken L. Smith — STATE DESIGN ENGINEER

02-21-07 — DATE

Washington State Department of Transportation

EFFECTIVE: APRIL 2, 2007 TO JANUARY 6, 2008

EFFECTIVE: APRIL 2, 2007 TO JANUARY 6, 2008

EFFECTIVE: APRIL 2, 2007 TO JANUARY 6, 2008

DRAWN BY: LISA CYFORD

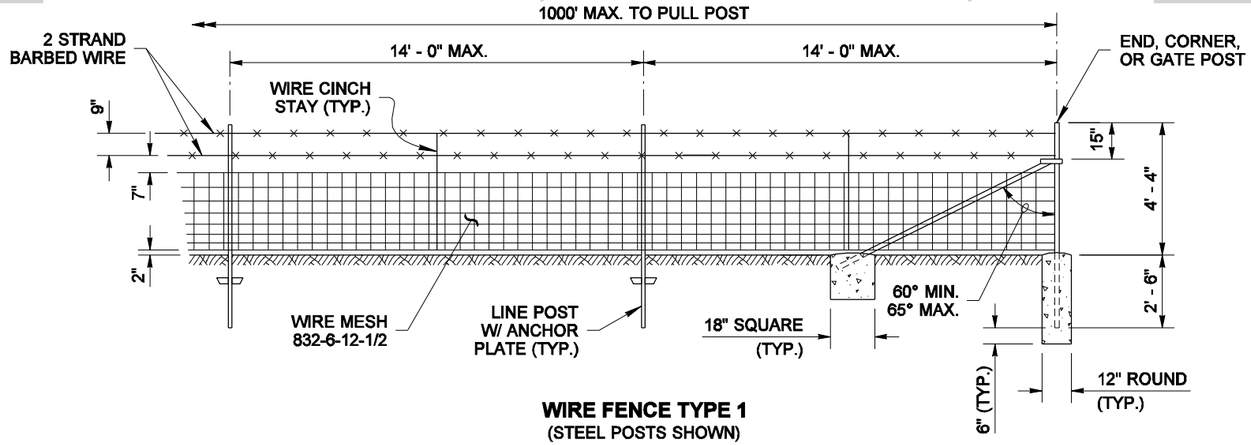

WIRE FENCE TYPE 1
(STEEL POSTS SHOWN)

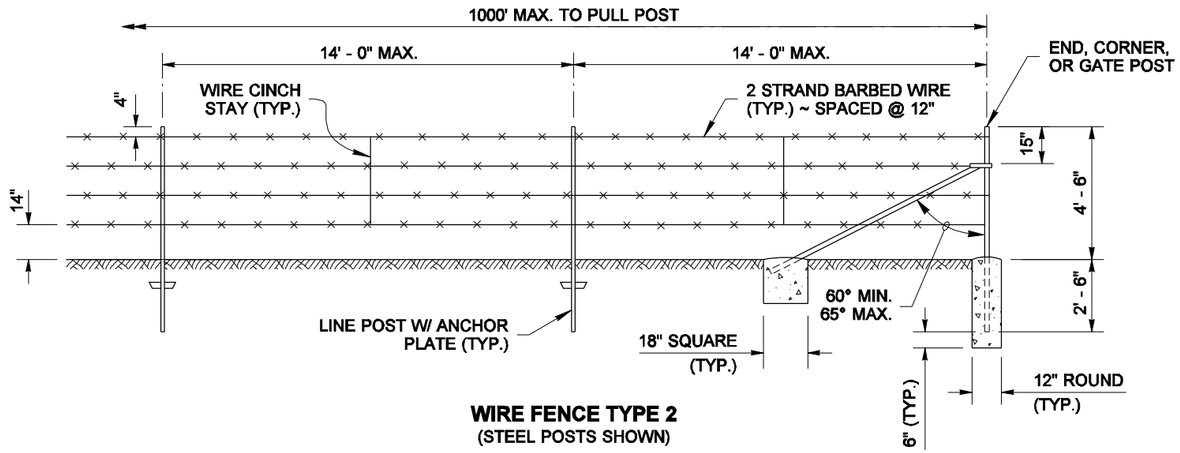

WIRE FENCE TYPE 2
(STEEL POSTS SHOWN)

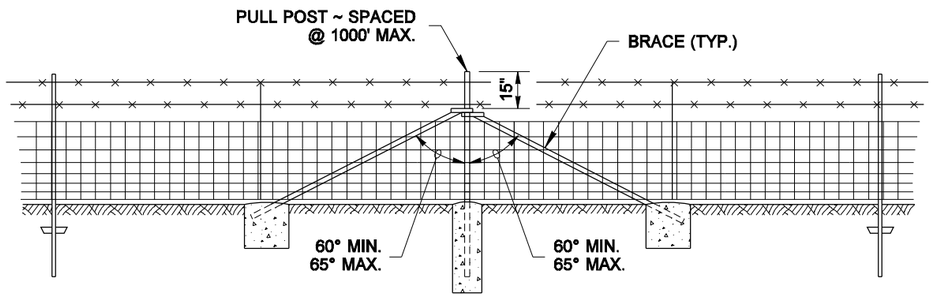

INTERMEDIATE BRACING / PULL POST
(SHOWN FOR FENCE TYPE 1)

NOTES

1. The bracing and pull post details for Wire Fence Type 2 are the same as for Type 1.
2. Attach the wire mesh to the posts using four fasteners. Three additional fasteners per post are required within and at the limits of sag conditions. Use additional fasteners on posts which mark the angle point of any sudden change in topography.
3. Wood anchors (for wood posts) shall be 2×4 lumber, 12" long minimum, and fastened with three 16d galvanized nails.

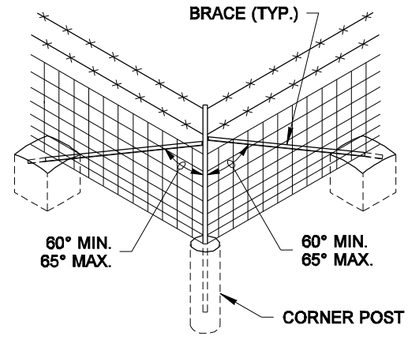

CORNER BRACING
(SHOWN FOR FENCE TYPE 1)

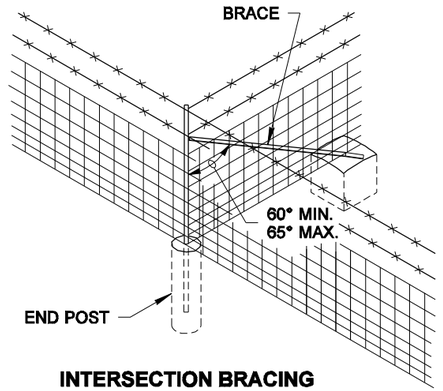

INTERSECTION BRACING
(SHOWN FOR FENCE TYPE 1)

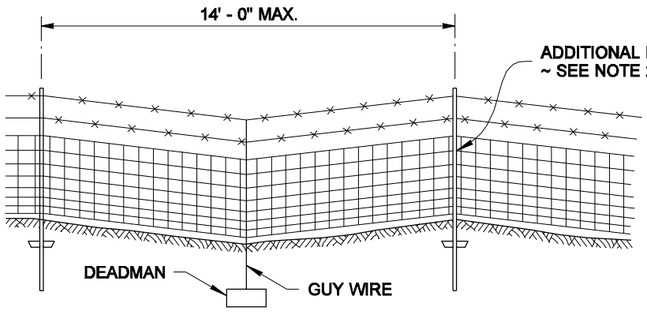

GRADE DEPRESSION (SAG) DETAIL
(STEEL POSTS SHOWN)

KEN LEROY SMITH
STATE OF WASHINGTON
31805
REGISTERED
PROFESSIONAL ENGINEER

EXPIRES AUGUST 26, 2007

NOTE: THIS PLAN IS NOT A LEGAL ENGINEERING DOCUMENT BUT AN ELECTRONIC DUPLICATE. THE ORIGINAL, SIGNED BY THE ENGINEER AND APPROVED FOR PUBLICATION, IS KEPT ON FILE AT THE WASHINGTON STATE DEPARTMENT OF TRANSPORTATION. A COPY MAY BE OBTAINED UPON REQUEST.

WIRE FENCE TYPES 1 & 2 AND WIRE GATES

STANDARD PLAN L-10.10-00

SHEET 1 OF 2 SHEETS

APPROVED FOR PUBLICATION

Ken L. Smith — STATE DESIGN ENGINEER — *02-21-07* — DATE

Washington State Department of Transportation

STEEL POSTS AND BRACES

EFFECTIVE: APRIL 2, 2007 TO JANUARY 6, 2008

EFFECTIVE: APRIL 2, 2007 TO JANUARY 6, 2008

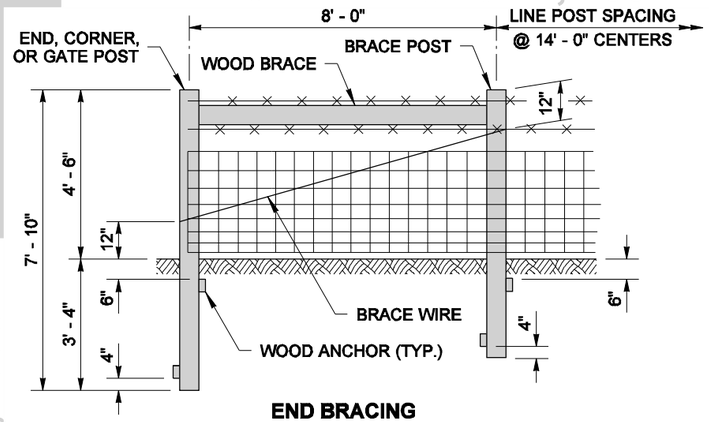

END BRACING
(FENCE TYPE 1 SHOWN)

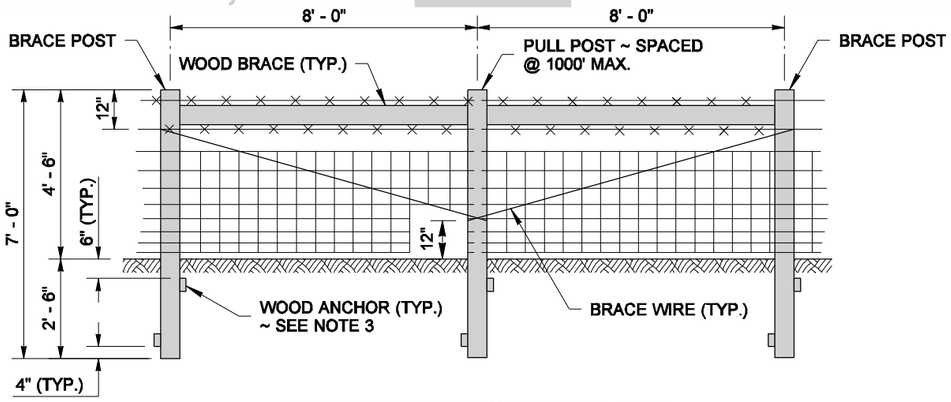

INTERMEDIATE BRACING / PULL POST
(WIRE FENCE TYPE 1 SHOWN)

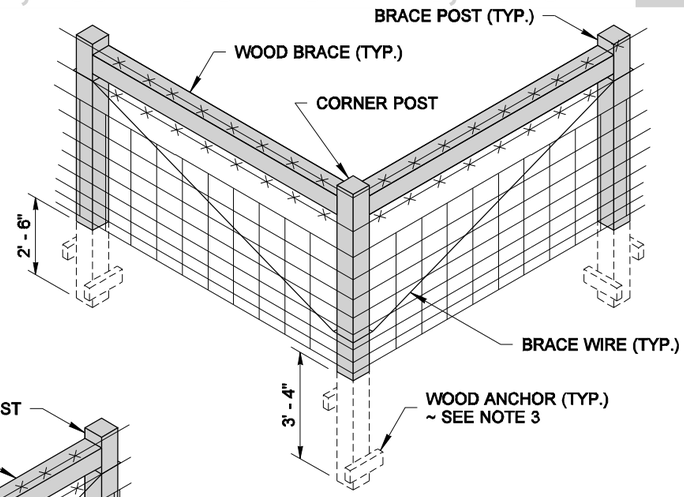

CORNER BRACING
(WIRE FENCE TYPE 1 SHOWN)

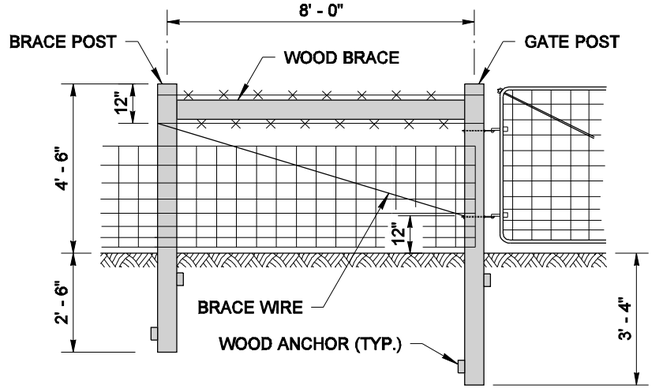

GATE BRACING
(WIRE FENCE TYPE 1 SHOWN)

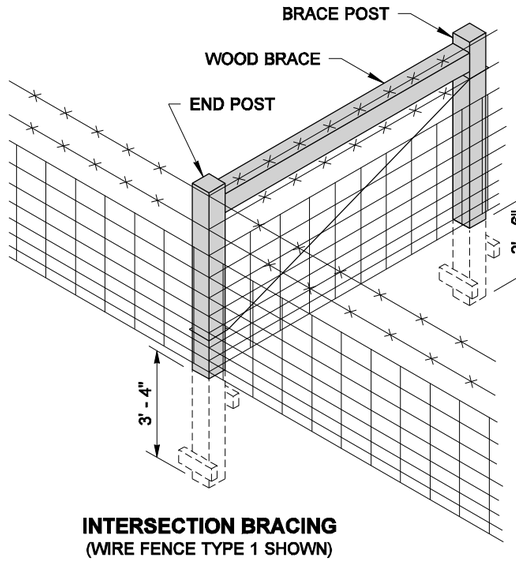

INTERSECTION BRACING
(WIRE FENCE TYPE 1 SHOWN)

WOOD POSTS AND BRACES

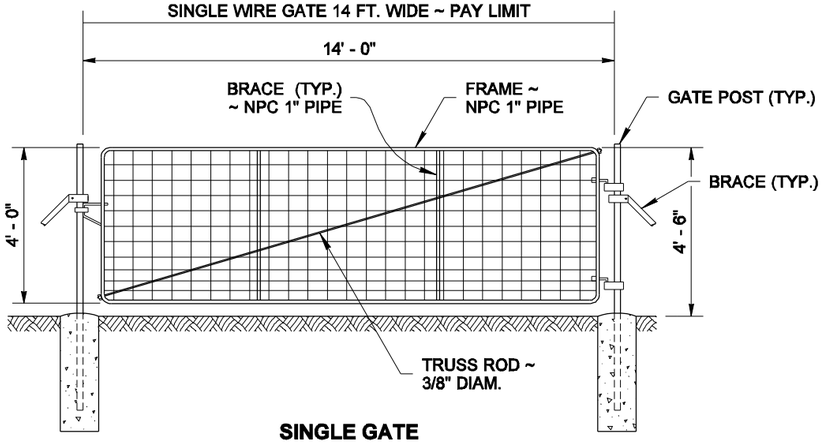

SINGLE GATE
(STEEL POSTS SHOWN)

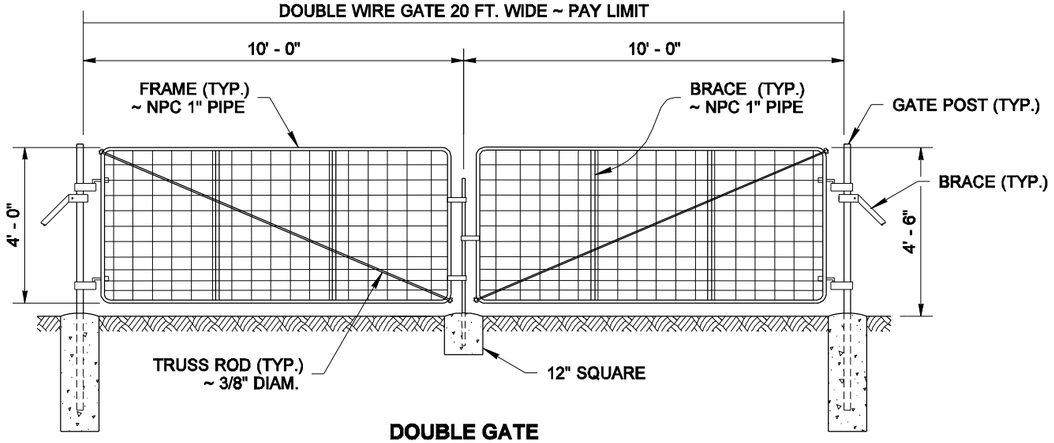

DOUBLE GATE
(STEEL POSTS SHOWN)

GATES



EXPIRES AUGUST 26, 2007

NOTE: THIS PLAN IS NOT A LEGAL ENGINEERING DOCUMENT BUT AN ELECTRONIC DUPLICATE. THE ORIGINAL, SIGNED BY THE ENGINEER AND APPROVED FOR PUBLICATION, IS KEPT ON FILE AT THE WASHINGTON STATE DEPARTMENT OF TRANSPORTATION. A COPY MAY BE OBTAINED UPON REQUEST.

WIRE FENCE TYPES 1 & 2 AND WIRE GATES

STANDARD PLAN L-10.10-00

SHEET 2 OF 2 SHEETS

APPROVED FOR PUBLICATION

Ken L. Smith — STATE DESIGN ENGINEER — *02-21-07* — DATE

Washington State Department of Transportation

DRAWN BY: LISA CYFORD

EFFECTIVE: APRIL 2, 2007 TO JANUARY 6, 2008

EFFECTIVE: APRIL 2, 2007 TO JANUARY 6, 2008

DRAWN BY: LISA CYFORD

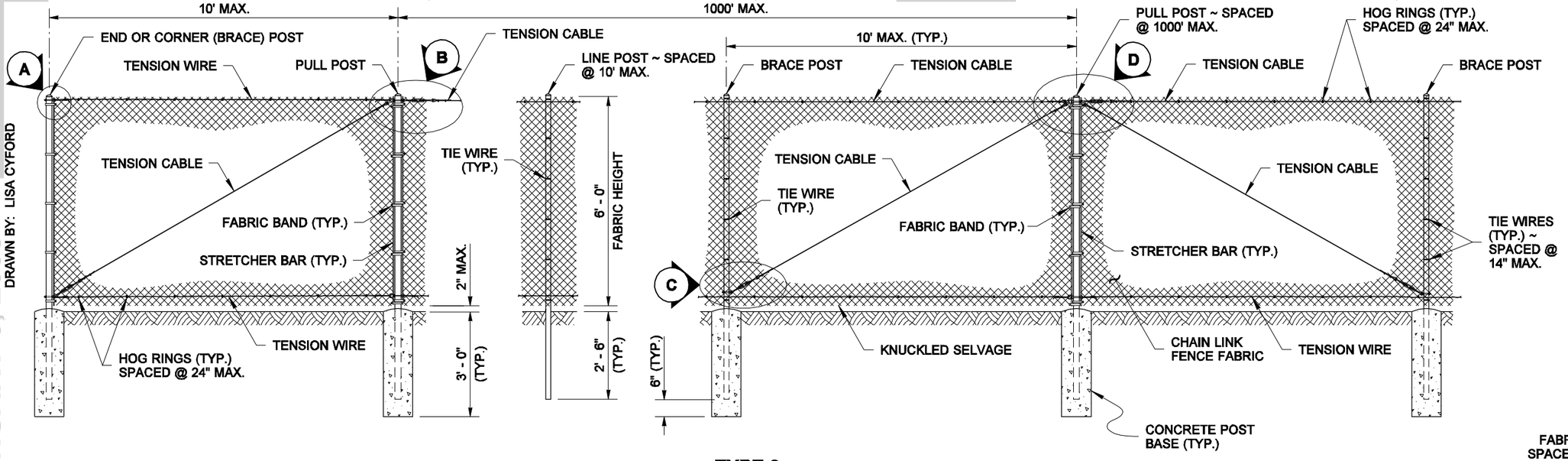

TYPE 3

NOTES

1. All concrete post bases shall be 10" minimum diameter.
2. Along the top and bottom, using Hog Rings, fasten the Chain Link Fence Fabric to the Tension Wire and Tension Cable within the limits of the first full fabric weave.
3. Details are illustrative and shall not limit hardware design or post selection of any particular fence type.

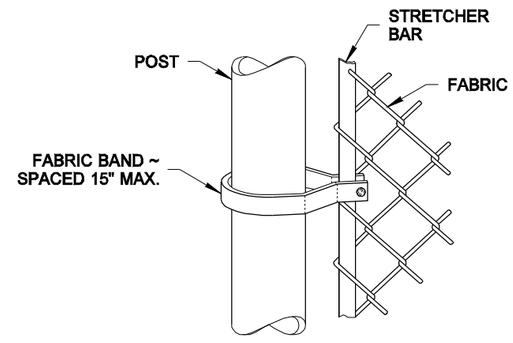

METHOD OF FASTENING STRETCHER BAR TO POST
(SHOWN FOR ROUND POST)

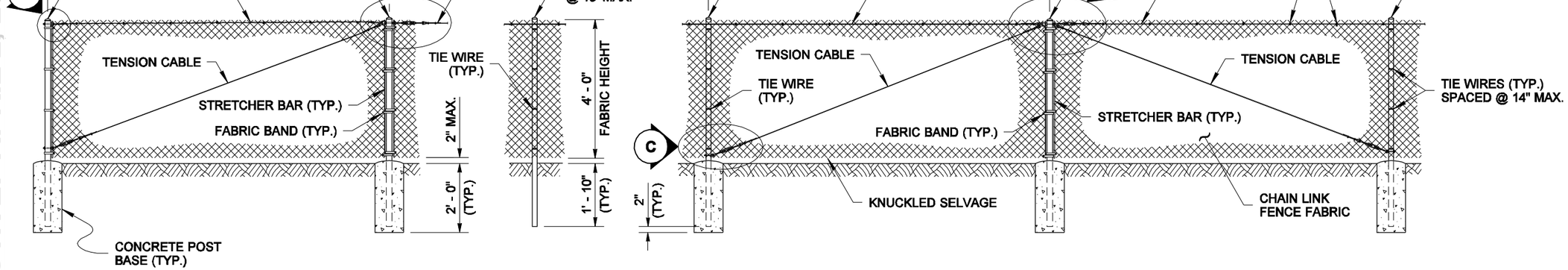

TYPE 4

POST AND RAIL SPECIFICATIONS

POST	PIPE	ROLL FORMED		H - COLUMN
	NOM. SIZE (SCH. 40)	SECTION	WEIGHT (lb/ft)	WEIGHT (lb/ft)
END, CORNER, OR PULL POST	2 1/2" DIAM.	(Y)	5.10	
LINE OR BRACE POST	2" DIAM.	(Z)	1.85	3.26

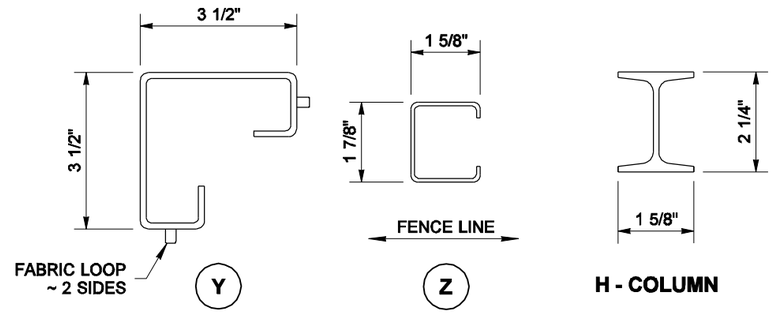

KEN LEROY SMITH
STATE OF WASHINGTON
31805
REGISTERED
PROFESSIONAL ENGINEER

EXPIRES AUGUST 26, 2007

NOTE: THIS PLAN IS NOT A LEGAL ENGINEERING DOCUMENT BUT AN ELECTRONIC DUPLICATE. THE ORIGINAL, SIGNED BY THE ENGINEER AND APPROVED FOR PUBLICATION, IS KEPT ON FILE AT THE WASHINGTON STATE DEPARTMENT OF TRANSPORTATION. A COPY MAY BE OBTAINED UPON REQUEST.

CHAIN LINK FENCE TYPES 3 AND 4

STANDARD PLAN L-20.10-00

SHEET 1 OF 2 SHEETS

APPROVED FOR PUBLICATION

Ken L. Smith — STATE DESIGN ENGINEER — *02-07-07* — DATE

Washington State Department of Transportation

EFFECTIVE: APRIL 2, 2007 TO JANUARY 6, 2008

EFFECTIVE: APRIL 2, 2007 TO JANUARY 6, 2008
EFFECTIVE: APRIL 2, 2007 TO JANUARY 6, 2008

DRAWN BY: LISA CYFORD

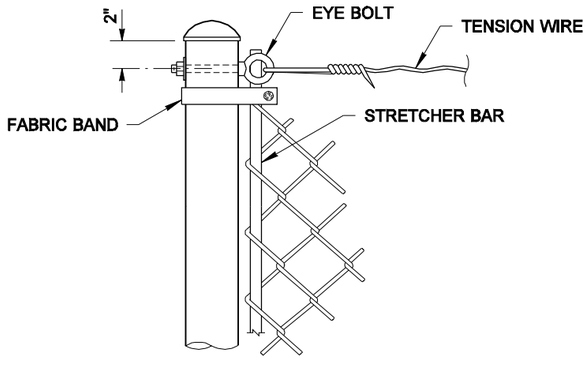

END OR CORNER (BRACE) POST

DETAIL (A)

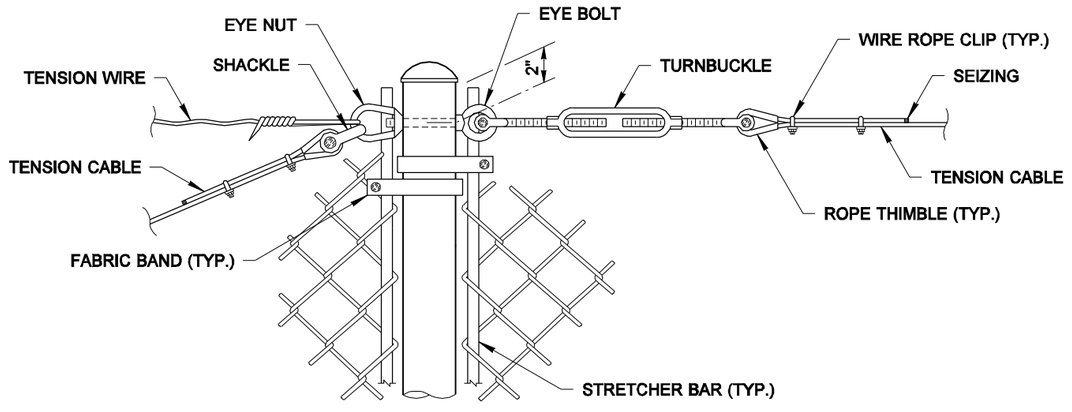

PULL POST (AT END OR CORNER)

DETAIL (B)

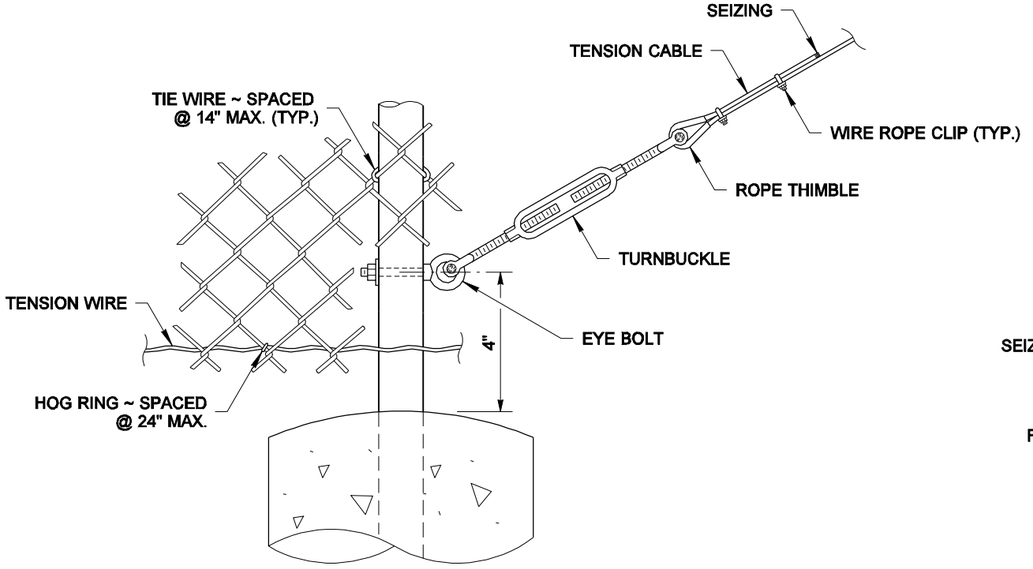

BRACE POST

DETAIL (C)

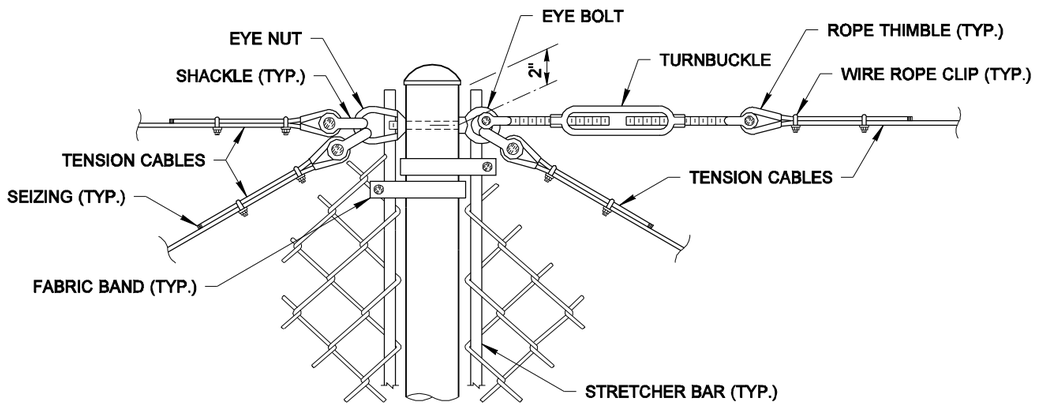

PULL POST (WITHIN RUN)

DETAIL (D)

KEN LEROY SMITH
STATE OF WASHINGTON
31805
REGISTERED
PROFESSIONAL ENGINEER

EXPIRES AUGUST 26, 2007

NOTE: THIS PLAN IS NOT A LEGAL ENGINEERING DOCUMENT BUT AN ELECTRONIC DUPLICATE. THE ORIGINAL, SIGNED BY THE ENGINEER AND APPROVED FOR PUBLICATION, IS KEPT ON FILE AT THE WASHINGTON STATE DEPARTMENT OF TRANSPORTATION. A COPY MAY BE OBTAINED UPON REQUEST.

CHAIN LINK FENCE TYPES 3 AND 4

STANDARD PLAN L-20.10-00

SHEET 2 OF 2 SHEETS

APPROVED FOR PUBLICATION

Ken L. Smith — STATE DESIGN ENGINEER

02-07-07 — DATE

Washington State Department of Transportation

EFFECTIVE: APRIL 2, 2007 TO JANUARY 6, 2008
EFFECTIVE: APRIL 2, 2007 TO JANUARY 6, 2008

EFFECTIVE: APRIL 2, 2007 TO JANUARY 6, 2008
EFFECTIVE: APRIL 2, 2007 TO JANUARY 6, 2008

DRAWN BY: LISA CYFORD

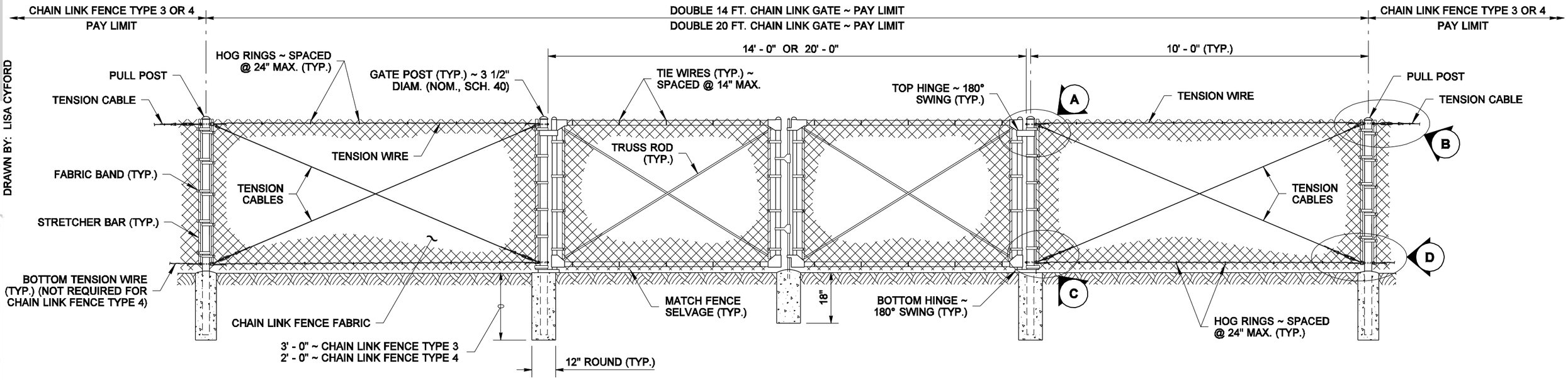

DOUBLE GATE

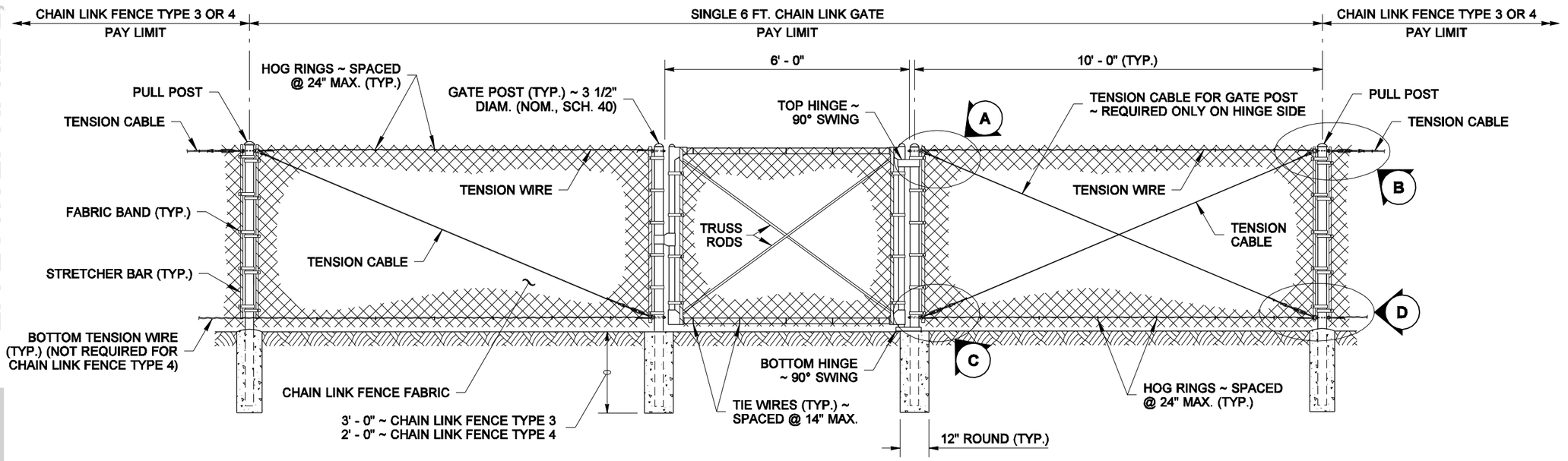

SINGLE GATE

KEN LEROY SMITH
STATE OF WASHINGTON
31805
REGISTERED
PROFESSIONAL ENGINEER

EXPIRES AUGUST 26, 2007

NOTE: THIS PLAN IS NOT A LEGAL ENGINEERING DOCUMENT BUT AN ELECTRONIC DUPLICATE. THE ORIGINAL, SIGNED BY THE ENGINEER AND APPROVED FOR PUBLICATION, IS KEPT ON FILE AT THE WASHINGTON STATE DEPARTMENT OF TRANSPORTATION. A COPY MAY BE OBTAINED UPON REQUEST.

CHAIN LINK GATE

STANDARD PLAN L-30.10-00

SHEET 1 OF 2 SHEETS

APPROVED FOR PUBLICATION

Ken L. Smith — STATE DESIGN ENGINEER

02-07-07 — DATE

Washington State Department of Transportation

EFFECTIVE: APRIL 2, 2007 TO JANUARY 6, 2008
EFFECTIVE: APRIL 2, 2007 TO JANUARY 6, 2008

EFFECTIVE: APRIL 2, 2007 TO JANUARY 6, 2008

EFFECTIVE: APRIL 2, 2007 TO JANUARY 6, 2008

DRAWN BY: LISA CYFORD

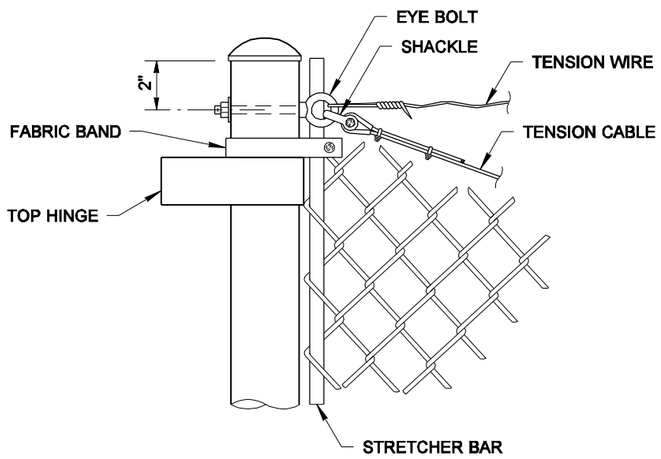

GATE POST

DETAIL (A)

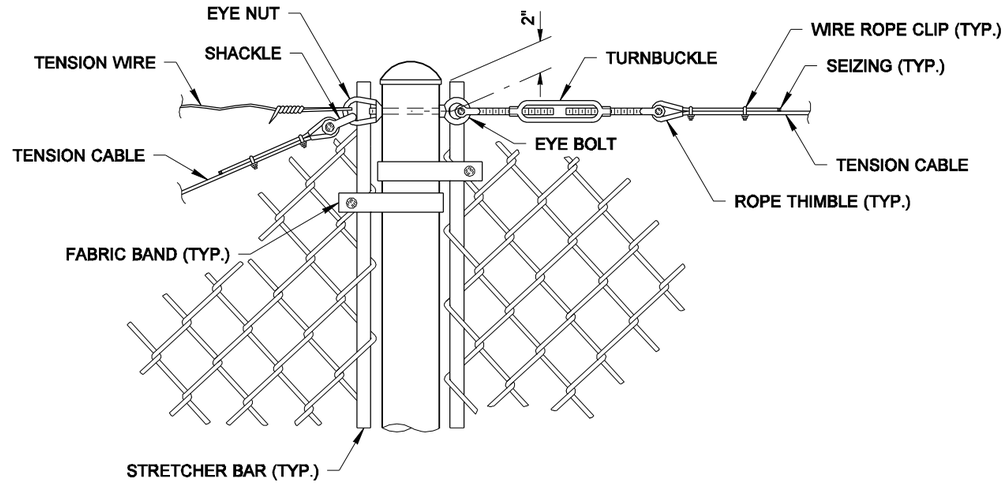

PULL POST

DETAIL (B)

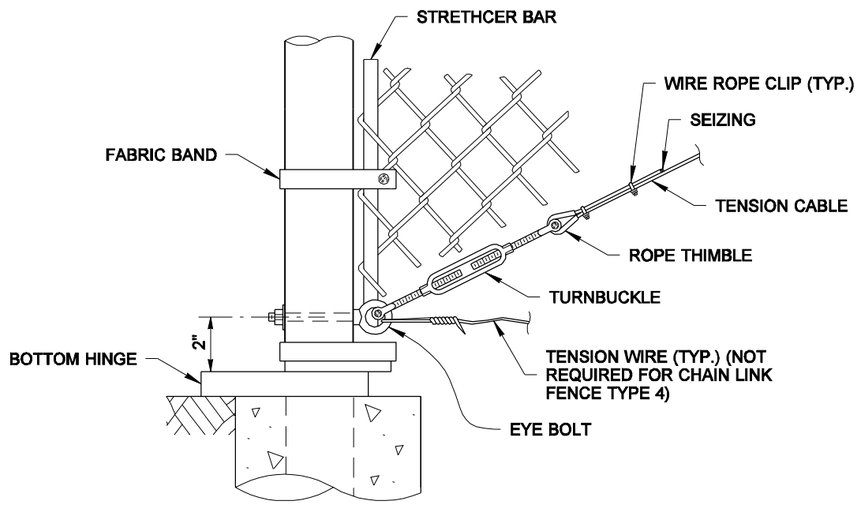

GATE POST

DETAIL (C)

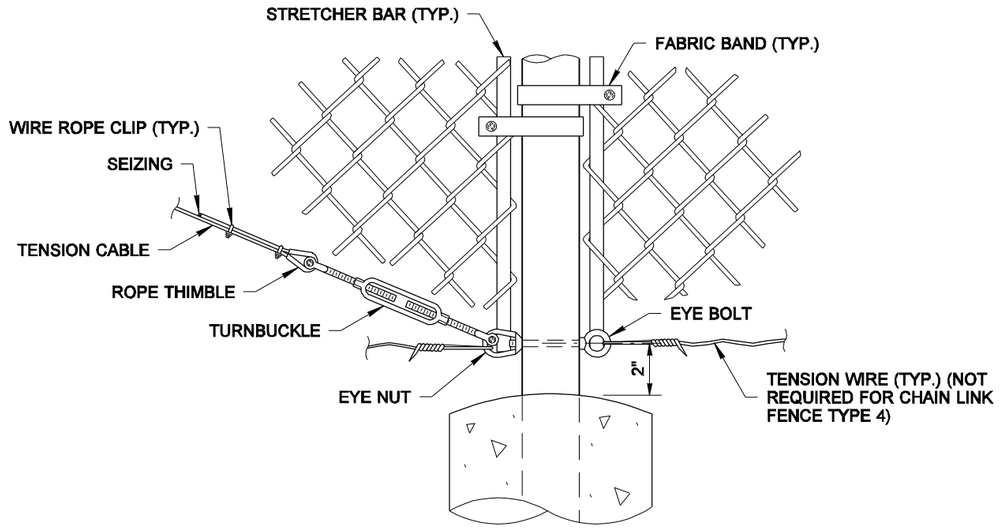

PULL POST

DETAIL (D)

KEN LEROY SMITH
STATE OF WASHINGTON
31805
REGISTERED
PROFESSIONAL ENGINEER

EXPIRES AUGUST 26, 2007

NOTE: THIS PLAN IS NOT A LEGAL ENGINEERING DOCUMENT BUT AN ELECTRONIC DUPLICATE. THE ORIGINAL, SIGNED BY THE ENGINEER AND APPROVED FOR PUBLICATION, IS KEPT ON FILE AT THE WASHINGTON STATE DEPARTMENT OF TRANSPORTATION. A COPY MAY BE OBTAINED UPON REQUEST.

CHAIN LINK GATE

STANDARD PLAN L-30.10-00

SHEET 2 OF 2 SHEETS

APPROVED FOR PUBLICATION

Ken L. Smith — STATE DESIGN ENGINEER

02-07-07 — DATE

Washington State Department of Transportation

EFFECTIVE: APRIL 2, 2007 TO JANUARY 6, 2008

EFFECTIVE: APRIL 2, 2007 TO JANUARY 6, 2008

EFFECTIVE: APRIL 2, 2007 TO JANUARY 6, 2008

DRAWN BY: LISA CYFORD

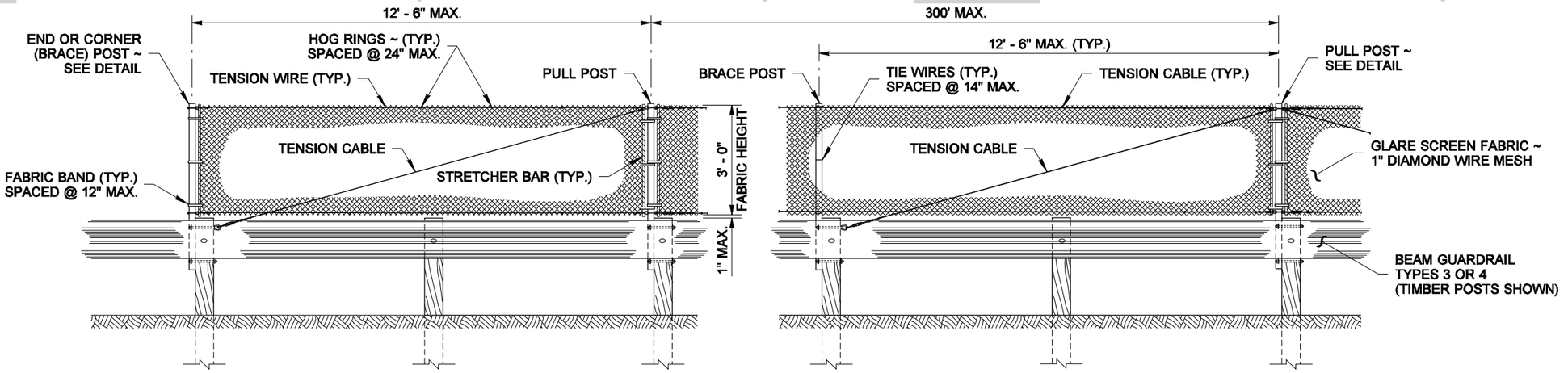

ELEVATION VIEW

NOTES

1. All glare screen posts shall be 1 5/8" × 2 1/4" Galvanized Steel H-Columns.
2. Post Bolts shall be:

   On Timber Posts: Hex head bolt 5/8-16 UNC × 8" with lock washer.

   On Steel Posts: Hex head bolt 5/8-16 UNC × 2 1/2" with lock washer.

   Either with hex nut and washer, or eye nut and washer where shown in the plan.

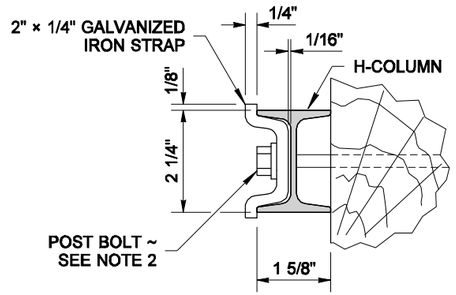

VIEW (C)

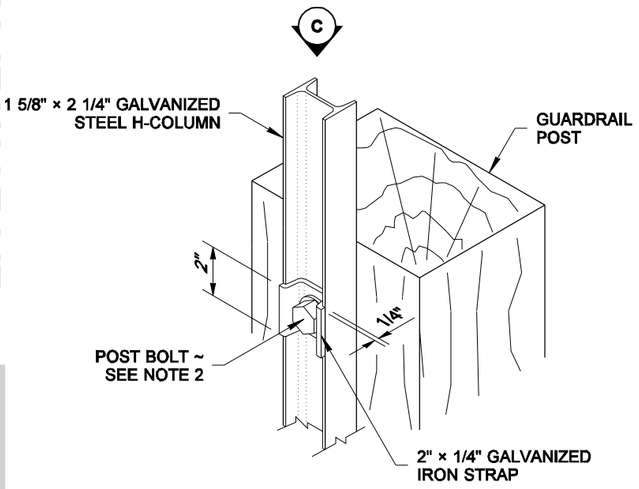

END OR CORNER (BRACE) POST

DETAIL (A)

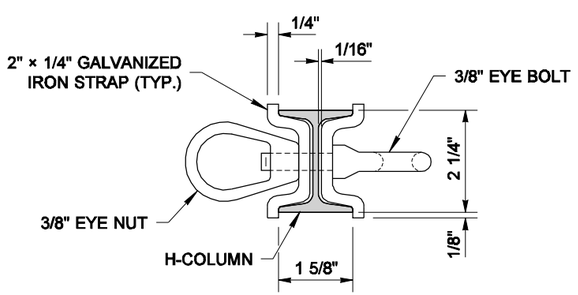

VIEW (D)

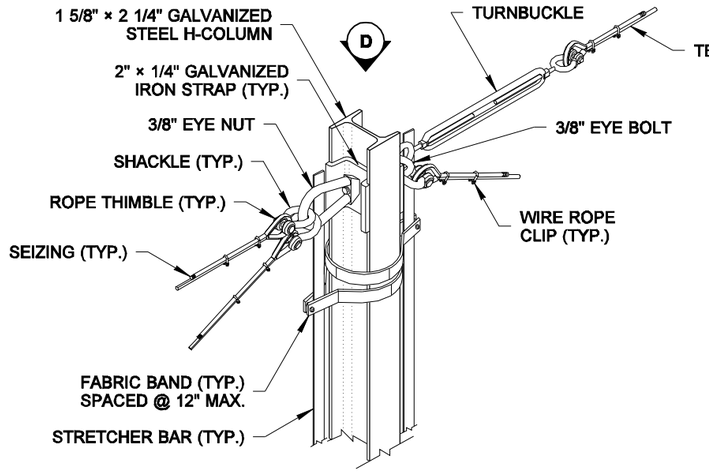

PULL POST (WITHIN RUN)

DETAIL (B)

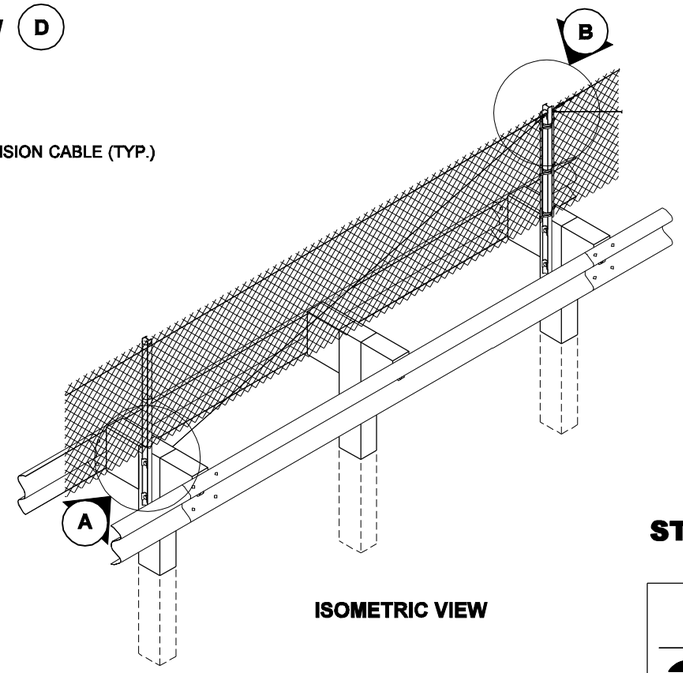

ISOMETRIC VIEW

KEN LEROY SMITH
STATE OF WASHINGTON
31805
REGISTERED
PROFESSIONAL ENGINEER

EXPIRES AUGUST 26, 2007

NOTE: THIS PLAN IS NOT A LEGAL ENGINEERING DOCUMENT BUT AN ELECTRONIC DUPLICATE. THE ORIGINAL, SIGNED BY THE ENGINEER AND APPROVED FOR PUBLICATION, IS KEPT ON FILE AT THE WASHINGTON STATE DEPARTMENT OF TRANSPORTATION. A COPY MAY BE OBTAINED UPON REQUEST.

GLARE SCREEN TYPE 1 DESIGN A

STANDARD PLAN L-40.10-00

SHEET 1 OF 2 SHEETS

APPROVED FOR PUBLICATION

Ken L. Smith — STATE DESIGN ENGINEER

02-21-07 — DATE

Washington State Department of Transportation

EFFECTIVE: APRIL 2, 2007 TO JANUARY 6, 2008

EFFECTIVE: APRIL 2, 2007 TO JANUARY 6, 2008

DRAWN BY: LISA CYFORD

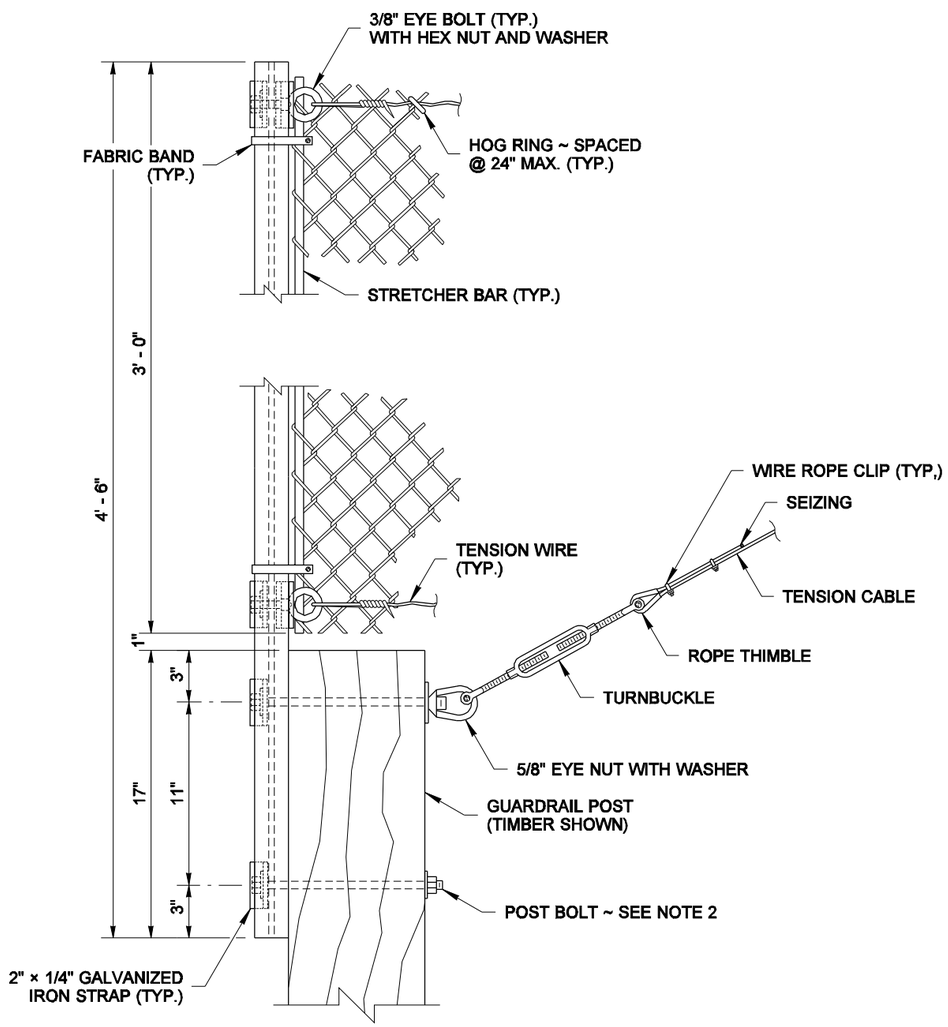

END OR CORNER, (BRACE) POST DETAIL

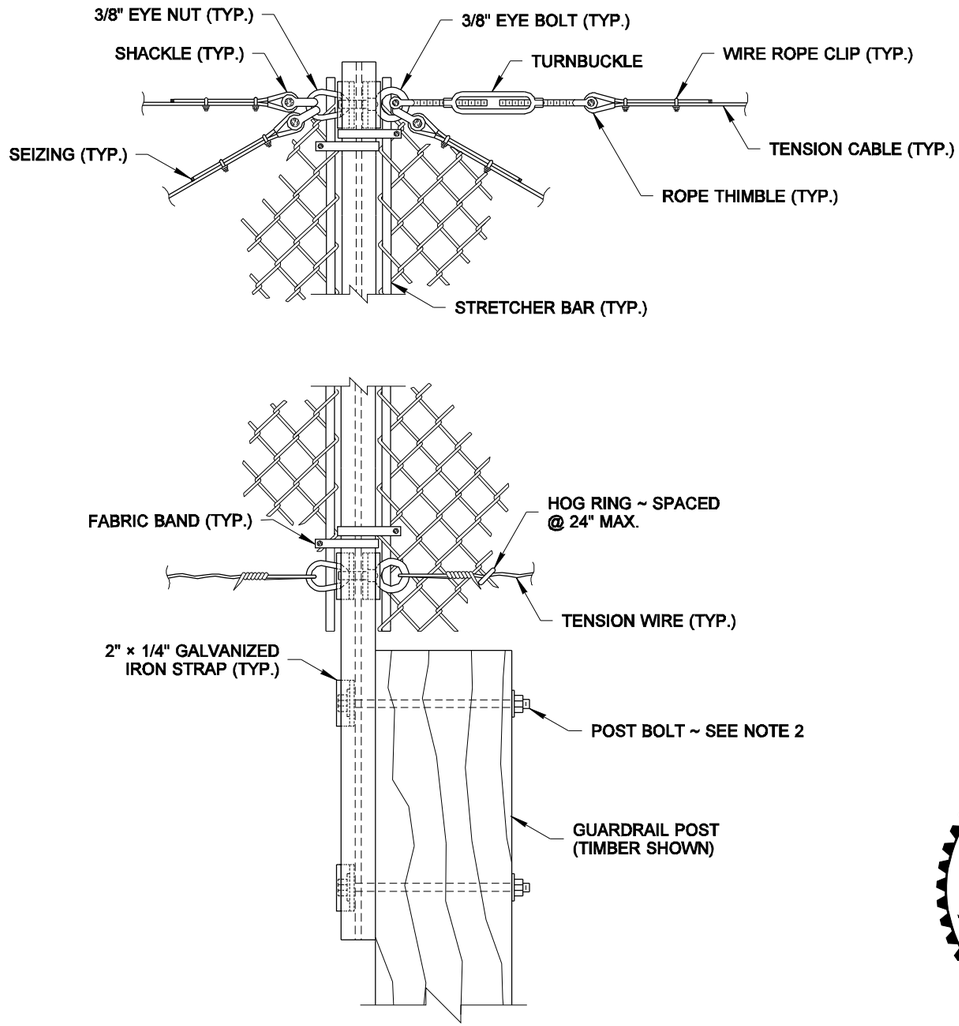

PULL POST (WITHIN RUN) DETAIL

KEN LEROY SMITH
STATE OF WASHINGTON
31805
REGISTERED
PROFESSIONAL ENGINEER

EXPIRES AUGUST 26, 2007

NOTE: THIS PLAN IS NOT A LEGAL ENGINEERING DOCUMENT BUT AN ELECTRONIC DUPLICATE. THE ORIGINAL, SIGNED BY THE ENGINEER AND APPROVED FOR PUBLICATION, IS KEPT ON FILE AT THE WASHINGTON STATE DEPARTMENT OF TRANSPORTATION. A COPY MAY BE OBTAINED UPON REQUEST.

GLARE SCREEN TYPE 1 DESIGN A

STANDARD PLAN L-40.10-00

SHEET 2 OF 2 SHEETS

APPROVED FOR PUBLICATION

Ken L. Smith — STATE DESIGN ENGINEER

02-21-07 — DATE

Washington State Department of Transportation

EFFECTIVE: APRIL 2, 2007 TO JANUARY 6, 2008

EFFECTIVE: APRIL 2, 2007 TO JANUARY 6, 2008

DRAWN BY: LISA CYFORD

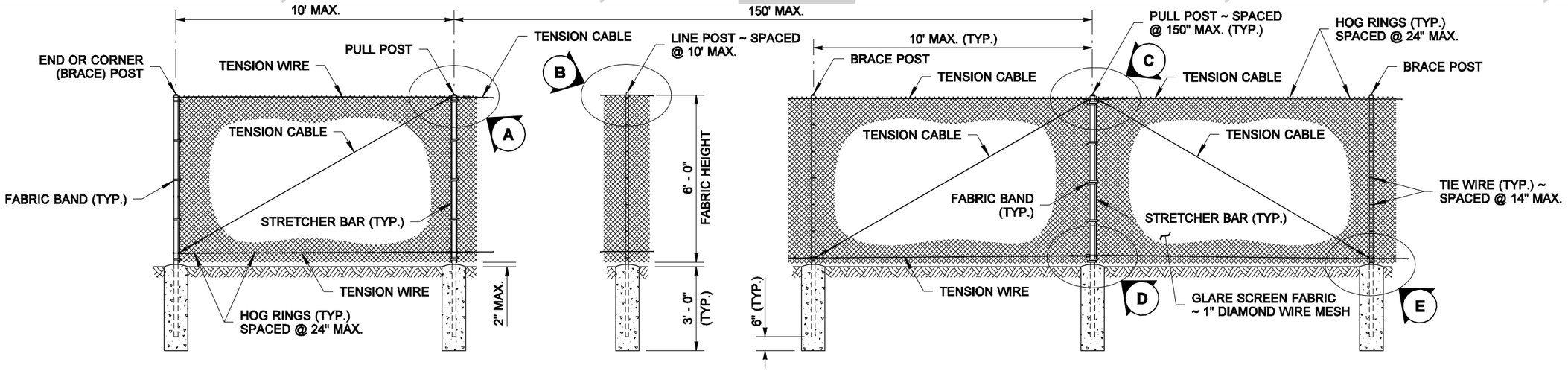

ELEVATION VIEW

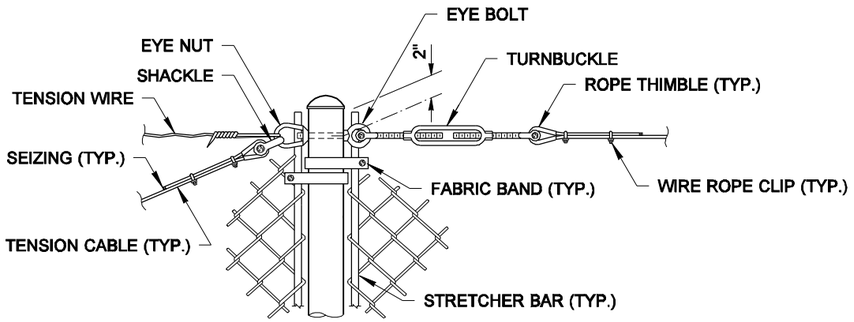

PULL POST

DETAIL A

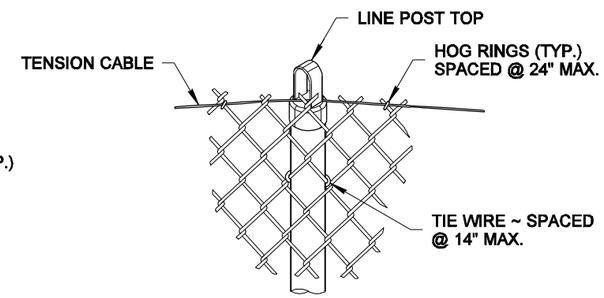

LINE POST

DETAIL B

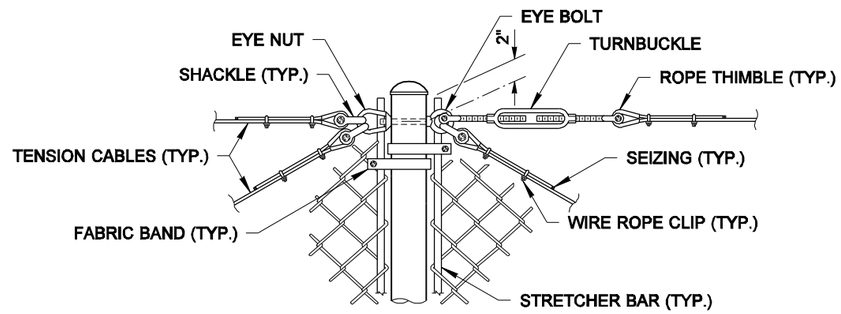

PULL POST (WITHIN RUN)

DETAIL C

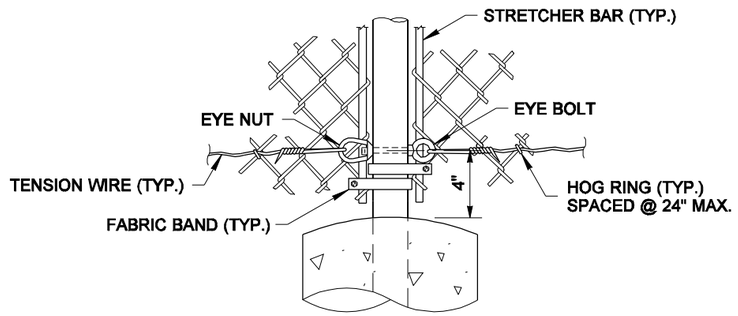

PULL POST

DETAIL D

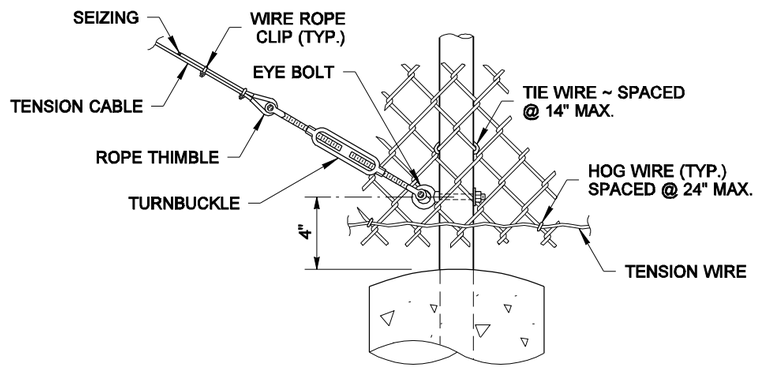

BRACE POST

DETAIL E

KEN LEROY SMITH
STATE OF WASHINGTON
31805
REGISTERED
PROFESSIONAL ENGINEER

EXPIRES AUGUST 26, 2007

NOTE: THIS PLAN IS NOT A LEGAL ENGINEERING DOCUMENT BUT AN ELECTRONIC DUPLICATE. THE ORIGINAL, SIGNED BY THE ENGINEER AND APPROVED FOR PUBLICATION, IS KEPT ON FILE AT THE WASHINGTON STATE DEPARTMENT OF TRANSPORTATION. A COPY MAY BE OBTAINED UPON REQUEST.

GLARE SCREEN TYPE 1 DESIGN B

STANDARD PLAN L-40.15-00

SHEET 1 OF 1 SHEET

APPROVED FOR PUBLICATION

Ken L. Smith — STATE DESIGN ENGINEER

02-21-07 — DATE

Washington State Department of Transportation

EFFECTIVE: APRIL 2, 2007 TO JANUARY 6, 2008

EFFECTIVE: APRIL 2, 2007 TO JANUARY 6, 2008

DRAWN BY: LISA CYFORD

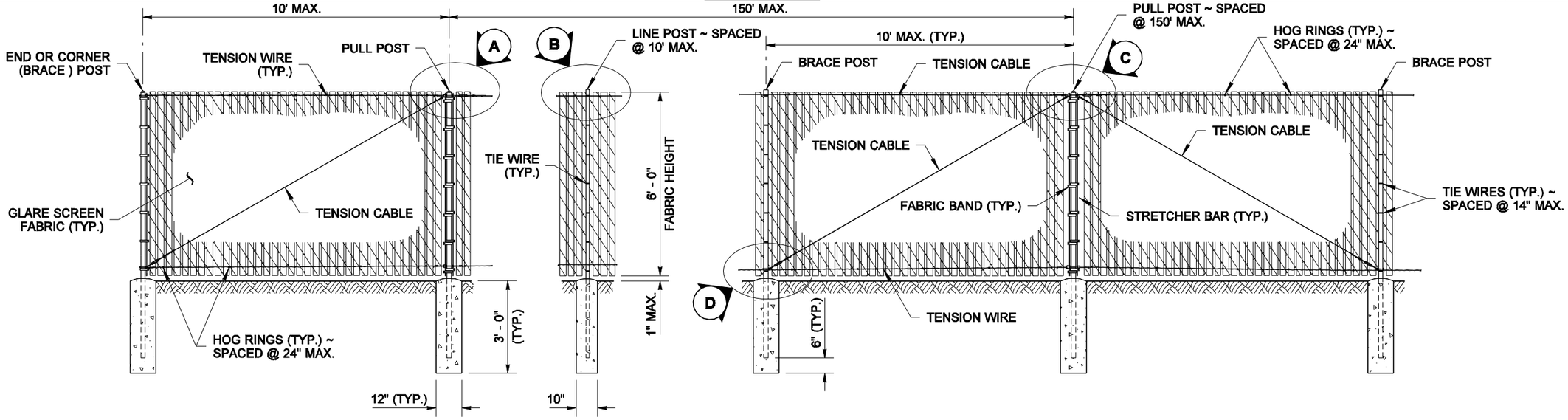

ELEVATION VIEW

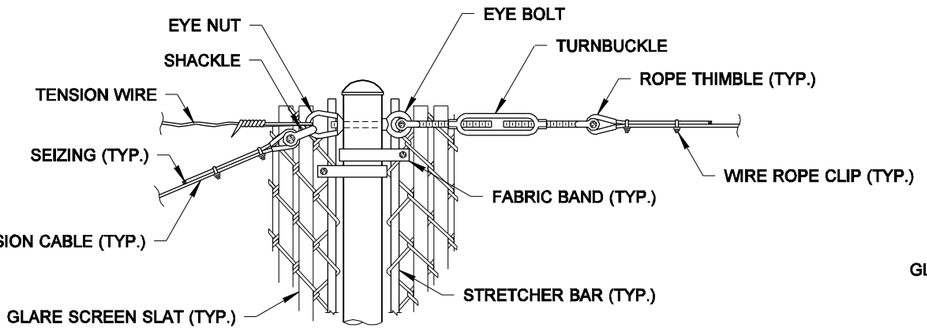

PULL POST

DETAIL (A)

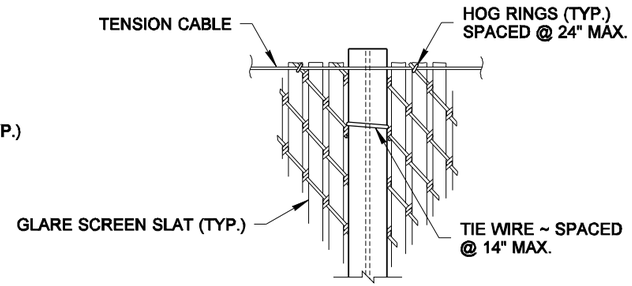

LINE POST

DETAIL (B)

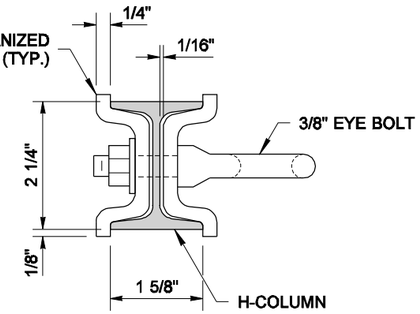

VIEW (E)

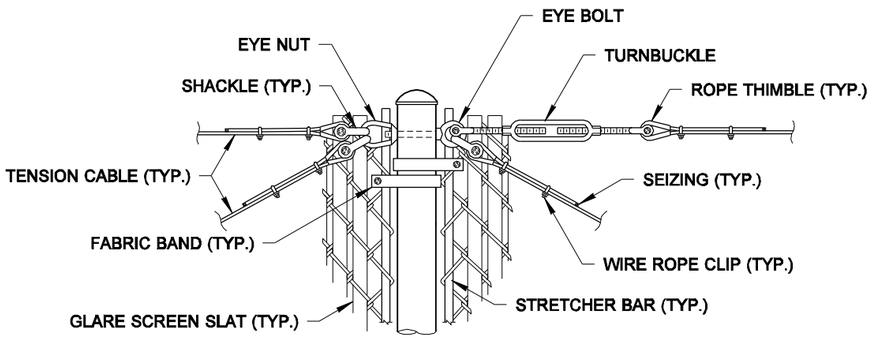

PULL POST (WITHIN RUN)

DETAIL (C)

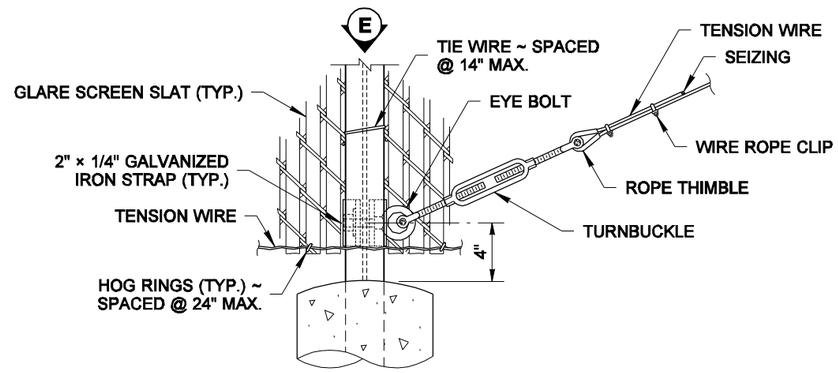

BRACE POST

DETAIL (D)

KEN LEROY SMITH
STATE OF WASHINGTON
31805
REGISTERED
PROFESSIONAL ENGINEER

EXPIRES AUGUST 26, 2007

NOTE: THIS PLAN IS NOT A LEGAL ENGINEERING DOCUMENT BUT AN ELECTRONIC DUPLICATE. THE ORIGINAL, SIGNED BY THE ENGINEER AND APPROVED FOR PUBLICATION, IS KEPT ON FILE AT THE WASHINGTON STATE DEPARTMENT OF TRANSPORTATION. A COPY MAY BE OBTAINED UPON REQUEST.

GLARE SCREEN TYPE 2 (CHAIN LINK WITH SLATS)

STANDARD PLAN L-40.20-00

SHEET 1 OF 1 SHEET

APPROVED FOR PUBLICATION

Ken L. Smith — STATE DESIGN ENGINEER

02-21-07 — DATE

Washington State Department of Transportation

EFFECTIVE: APRIL 2, 2007 TO JANUARY 6, 2008

EFFECTIVE: APRIL 2, 2007 TO JANUARY 6, 2008

DRAWN BY: ELENA BRUNSTEIN

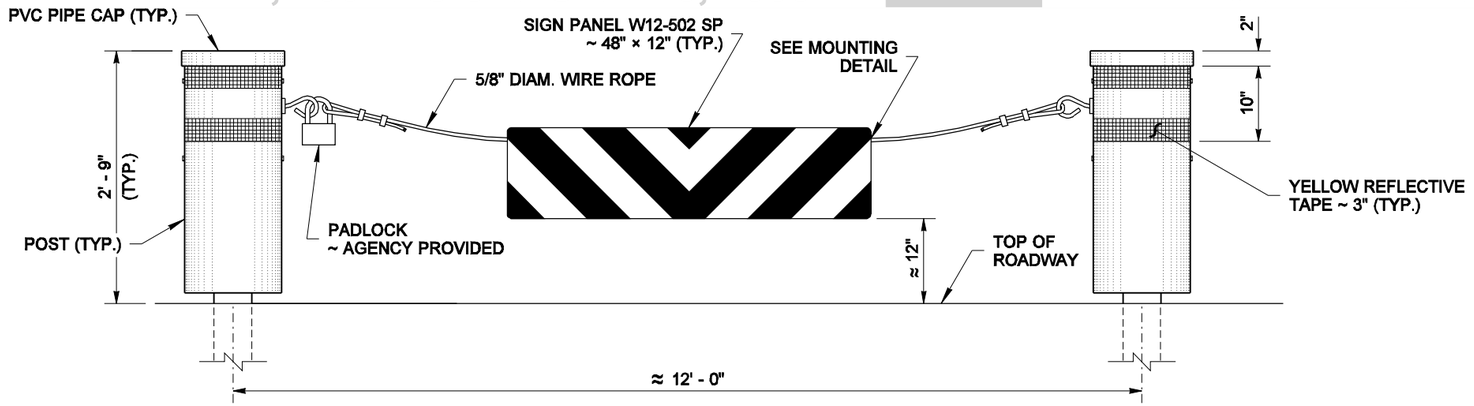

ELEVATION

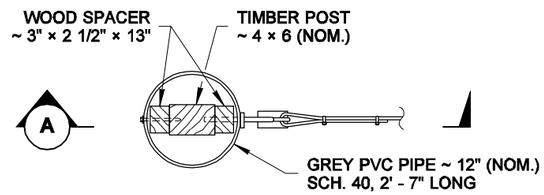

TOP VIEW
(CAP NOT SHOWN)

END POST

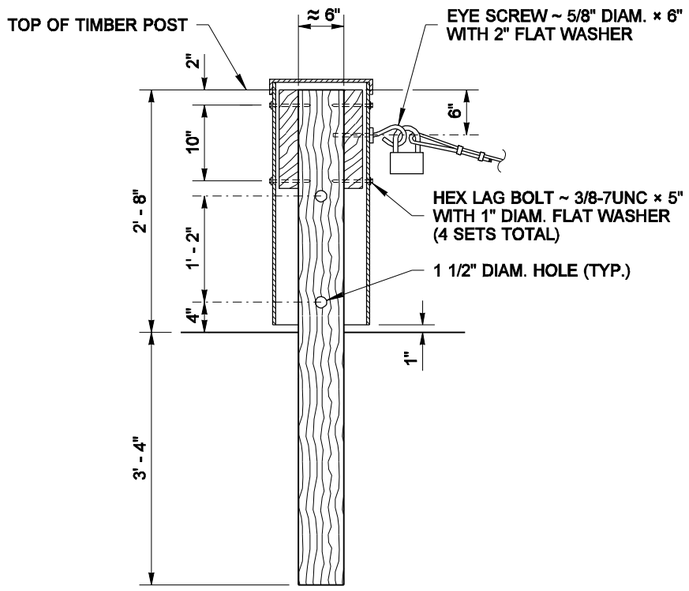

SECTION (A)

NOTE

Hardware shall be stainless steel or galvanized in accordance with AASHTO M232.

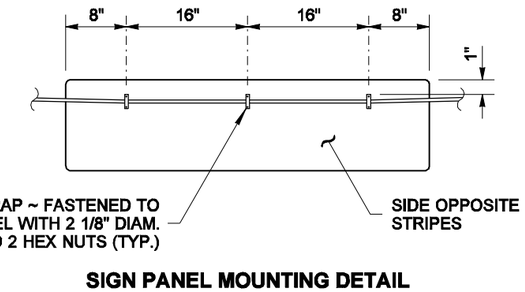

SIGN PANEL MOUNTING DETAIL

KEN LEROY SMITH
STATE OF WASHINGTON
31805
REGISTERED
PROFESSIONAL ENGINEER

EXPIRES AUGUST 26, 2007

NOTE: THIS PLAN IS NOT A LEGAL ENGINEERING DOCUMENT BUT AN ELECTRONIC DUPLICATE. THE ORIGINAL, SIGNED BY THE ENGINEER AND APPROVED FOR PUBLICATION, IS KEPT ON FILE AT THE WASHINGTON STATE DEPARTMENT OF TRANSPORTATION. A COPY MAY BE OBTAINED UPON REQUEST.

ACCESS CONTROL GATE

STANDARD PLAN L-70.10-00

SHEET 1 OF 1 SHEET

APPROVED FOR PUBLICATION

Ken L. Smith — STATE DESIGN ENGINEER

01-30-07 — DATE

Washington State Department of Transportation

EFFECTIVE: APRIL 2, 2007 TO JANUARY 6, 2008

EFFECTIVE: APRIL 2, 2007 TO JANUARY 6, 2008

DRAWN BY: ELENA BRUNSTEIN

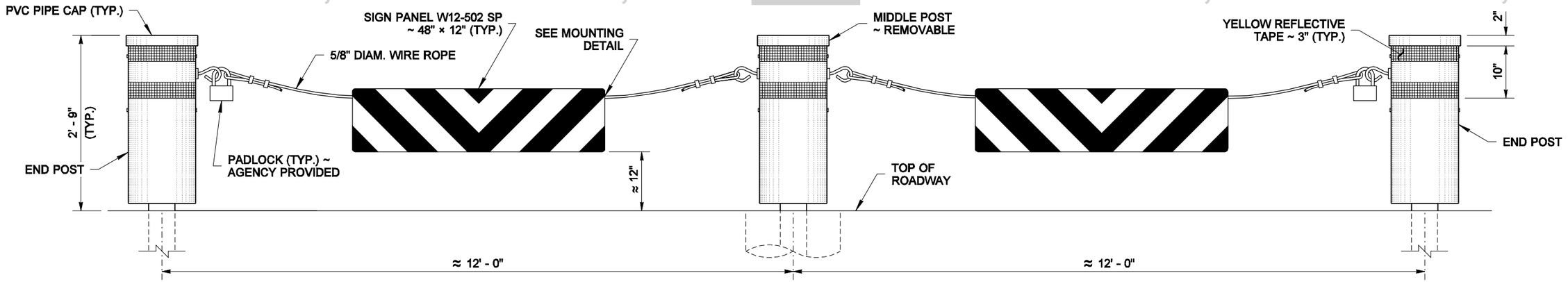

ELEVATION

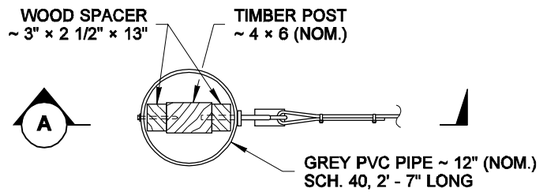

TOP VIEW
(CAP NOT SHOWN)
END POST

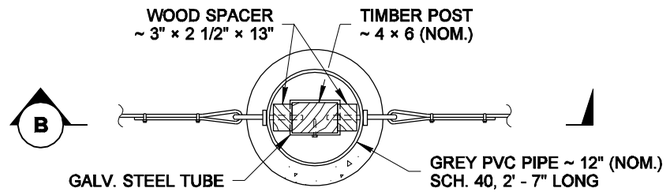

TOP VIEW
(CAP NOT SHOWN)
MIDDLE POST

NOTE

Hardware shall be stainless steel or galvanized in accordance with AASHTO M232.

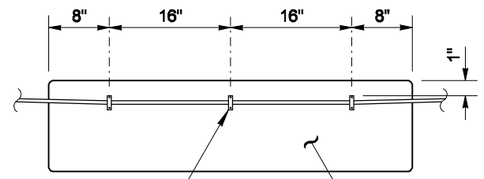

SIGN PANEL MOUNTING DETAIL

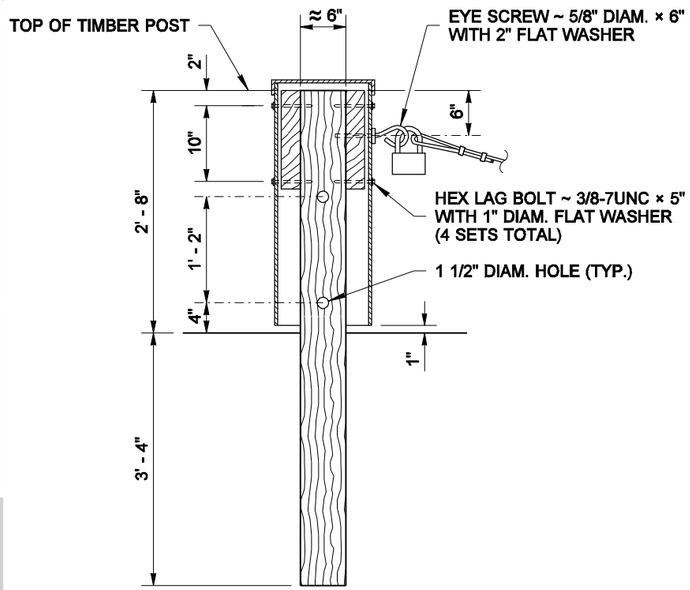

SECTION A

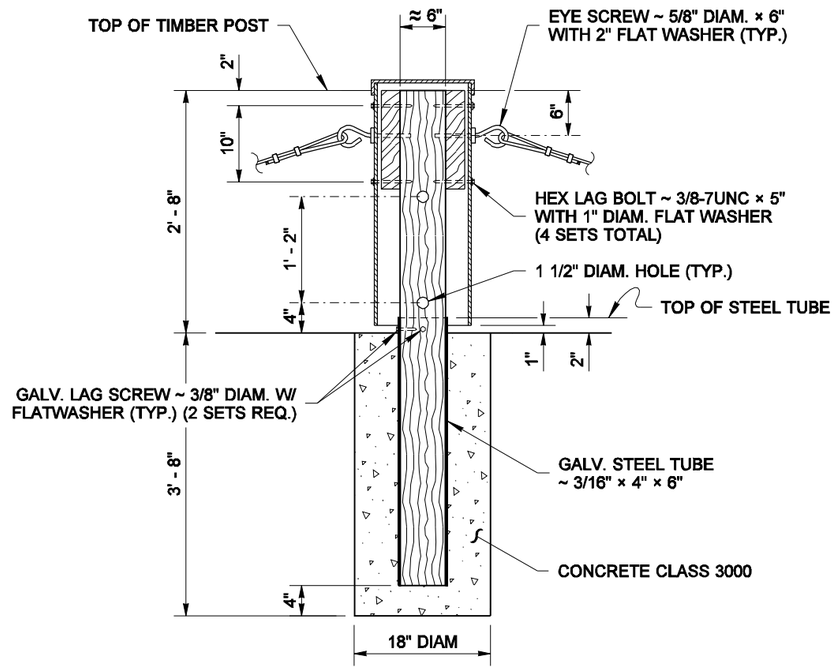

SECTION B



EXPIRES AUGUST 26, 2007

NOTE: THIS PLAN IS NOT A LEGAL ENGINEERING DOCUMENT BUT AN ELECTRONIC DUPLICATE. THE ORIGINAL, SIGNED BY THE ENGINEER AND APPROVED FOR PUBLICATION, IS KEPT ON FILE AT THE WASHINGTON STATE DEPARTMENT OF TRANSPORTATION. A COPY MAY BE OBTAINED UPON REQUEST.

ACCESS CONTROL DOUBLE GATE

STANDARD PLAN L-70.20-00

SHEET 1 OF 1 SHEET

APPROVED FOR PUBLICATION

Ken L. Smith — STATE DESIGN ENGINEER — *01-30-07* — DATE

Washington State Department of Transportation

EFFECTIVE: APRIL 2, 2007 TO JANUARY 6, 2008

EFFECTIVE: APRIL 2, 2007 TO JANUARY 6, 2008

DRAWN BY: ADAM COCHRAN

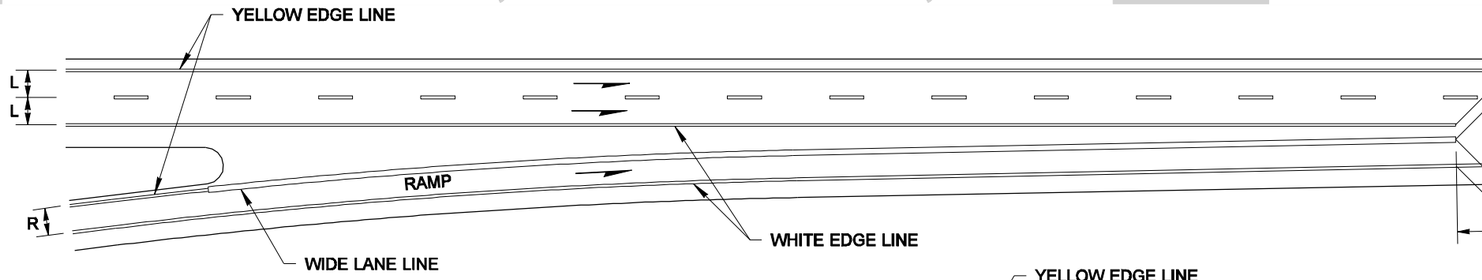

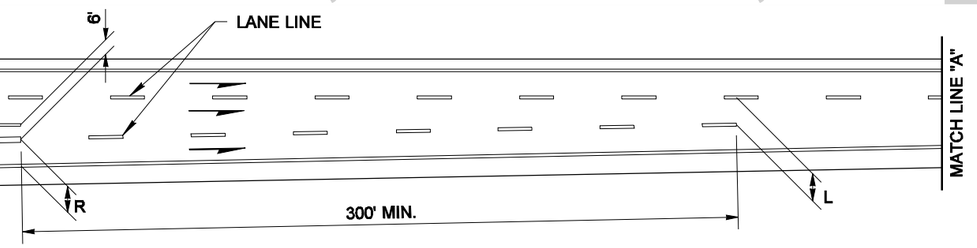

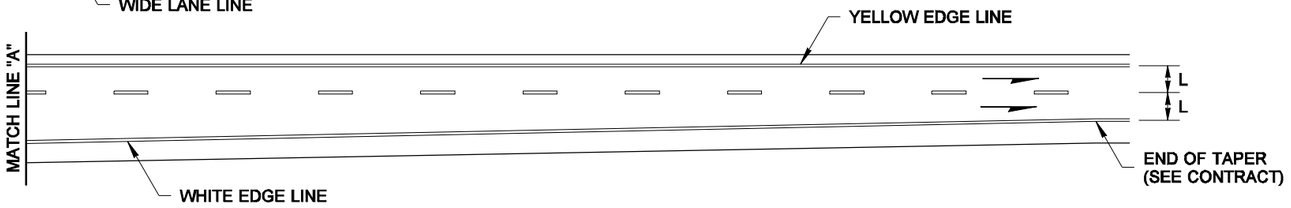

SINGLE LANE ON- CONNECTION

NOTES

1. Where shown on the plans or specified in the Special Provisions, raised pavement markers shall be used for supplementing or substituting the painted pavement markings shown hereon. See the Standard Plans for RPM supplement and substitution patterns.
2. The channelization shown on this plan assumes optimal roadway geometric design. The dimensions may vary to fit existing conditions. See Contract.

LEGEND

R = RAMP LANE WIDTH
L = LANE WIDTH

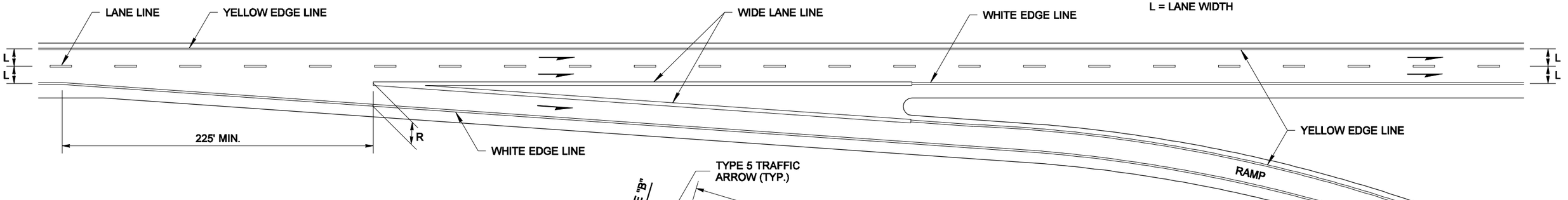

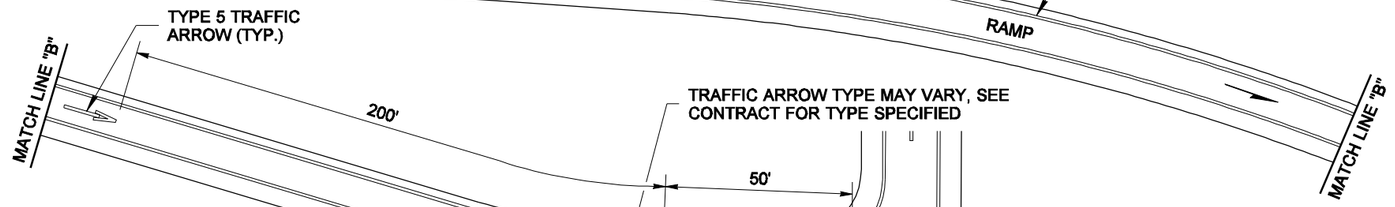

SINGLE LANE OFF- CONNECTION

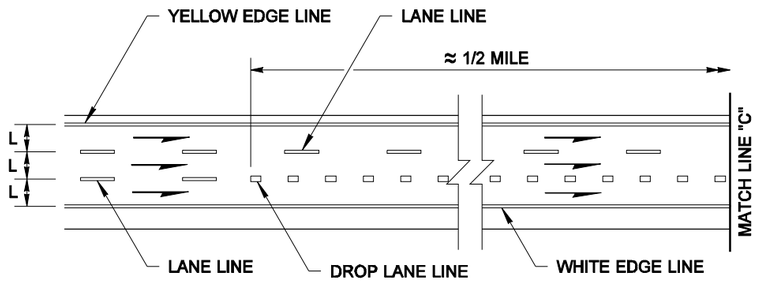

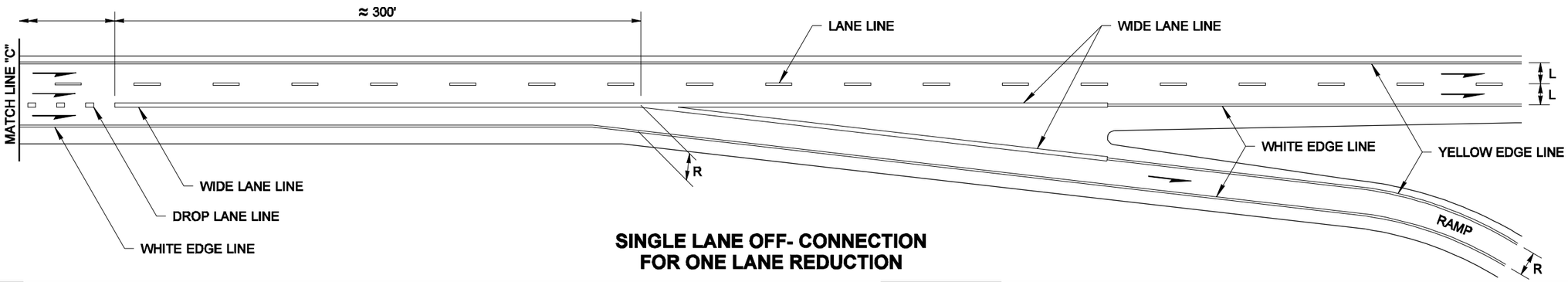

SINGLE LANE OFF- CONNECTION FOR ONE LANE REDUCTION

THEODORE J. TREPANIER
STATE OF WASHINGTON
25335
REGISTERED
PROFESSIONAL ENGINEER

EXPIRES AUGUST 9, 2007

NOTE: THIS PLAN IS NOT A LEGAL ENGINEERING DOCUMENT BUT AN ELECTRONIC DUPLICATE. THE ORIGINAL, SIGNED BY THE ENGINEER AND APPROVED FOR PUBLICATION, IS KEPT ON FILE AT THE WASHINGTON STATE DEPARTMENT OF TRANSPORTATION. A COPY MAY BE OBTAINED UPON REQUEST.

RAMP CHANNELIZATION SINGLE LANE

STANDARD PLAN M-1.20-01

SHEET 1 OF 1 SHEET

APPROVED FOR PUBLICATION

Ken L. Smith — STATE DESIGN ENGINEER — *01-30-07* — DATE

Washington State Department of Transportation

EFFECTIVE: APRIL 2, 2007 TO JANUARY 6, 2008

EFFECTIVE: APRIL 2, 2007 TO JANUARY 6, 2008
EFFECTIVE: APRIL 2, 2007 TO JANUARY 6, 2008

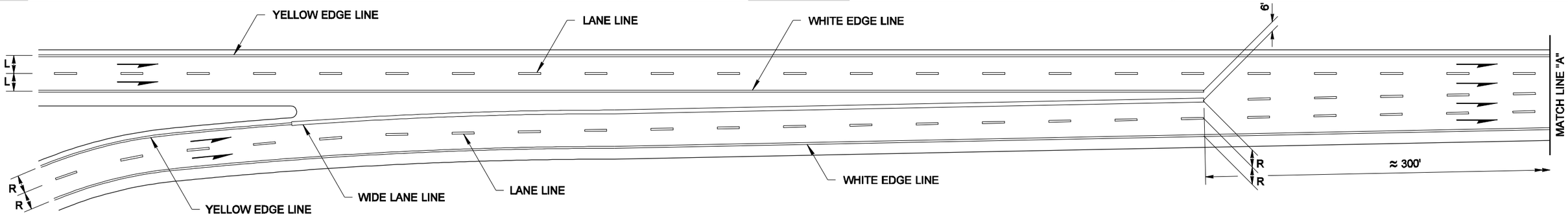

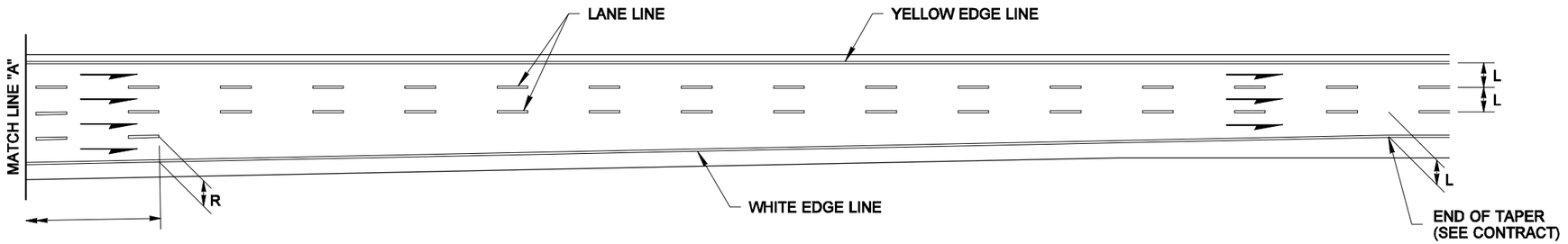

TWO LANE ON- CONNECTION

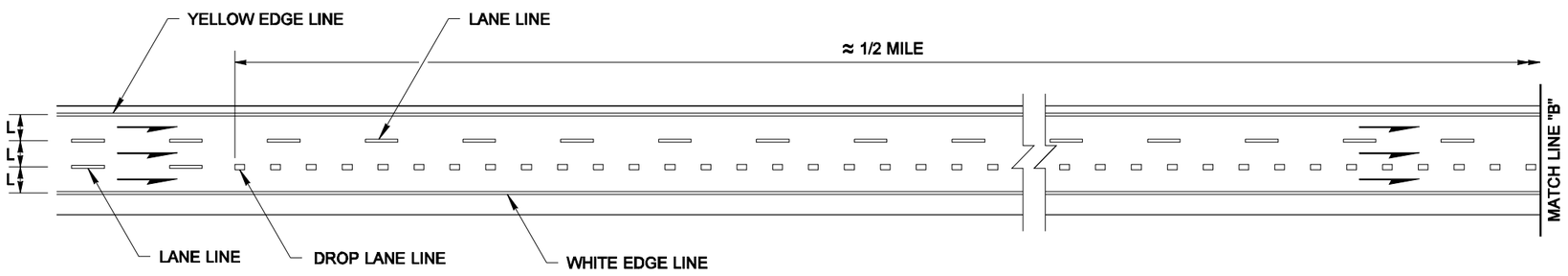

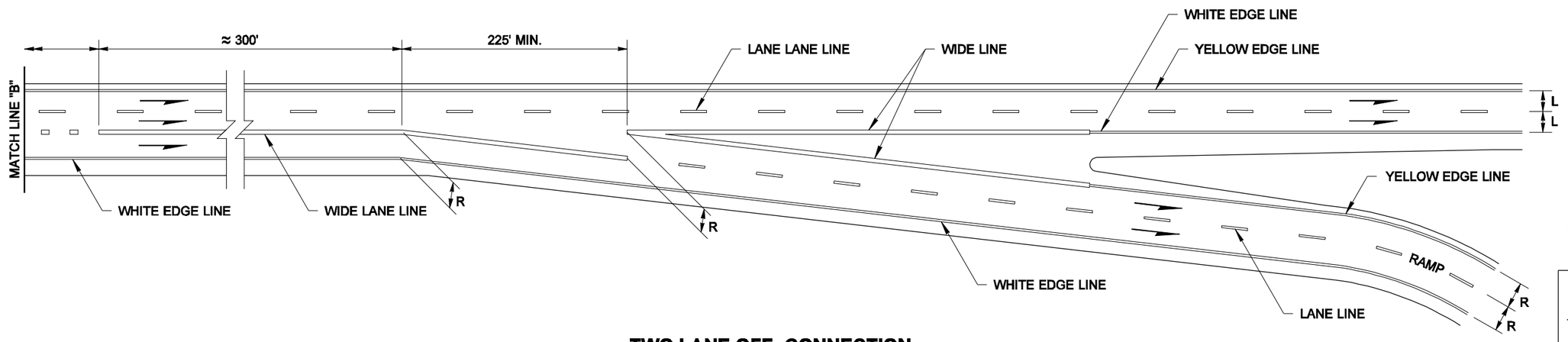

TWO LANE OFF- CONNECTION

NOTES

1. Where shown on the plans or specified in the Special Provisions, raised pavement markers shall be used for supplementing or substituting the painted pavement markings shown hereon. See the Standard Plans for RPM supplement and substitution patterns.
2. The channelization shown on this plan assumes optimal roadway geometric design. The dimensions may vary to fit existing conditions. See Contract.

LEGEND

R = RAMP LANE WIDTH
L = LANE WIDTH

THEODORE J. TREPANIER
STATE OF WASHINGTON
25335
REGISTERED
PROFESSIONAL ENGINEER
EXPIRES AUGUST 9, 2007

NOTE: THIS PLAN IS NOT A LEGAL ENGINEERING DOCUMENT BUT AN ELECTRONIC DUPLICATE. THE ORIGINAL, SIGNED BY THE ENGINEER AND APPROVED FOR PUBLICATION, IS KEPT ON FILE AT THE WASHINGTON STATE DEPARTMENT OF TRANSPORTATION. A COPY MAY BE OBTAINED UPON REQUEST.

RAMP CHANNELIZATION TWO LANE

STANDARD PLAN M-1.40-01

SHEET 1 OF 1 SHEET

APPROVED FOR PUBLICATION

Ken L. Smith — STATE DESIGN ENGINEER
01-30-07 — DATE

Washington State Department of Transportation

DRAWN BY: ADAM COCHRAN

EFFECTIVE: APRIL 2, 2007 TO JANUARY 6, 2008
EFFECTIVE: APRIL 2, 2007 TO JANUARY 6, 2008
EFFECTIVE: APRIL 2, 2007 TO JANUARY 6, 2008
EFFECTIVE: APRIL 2, 2007 TO JANUARY 6, 2008

EFFECTIVE: APRIL 2, 2007 TO JANUARY 6, 2008
EFFECTIVE: APRIL 2, 2007 TO JANUARY 6, 2008

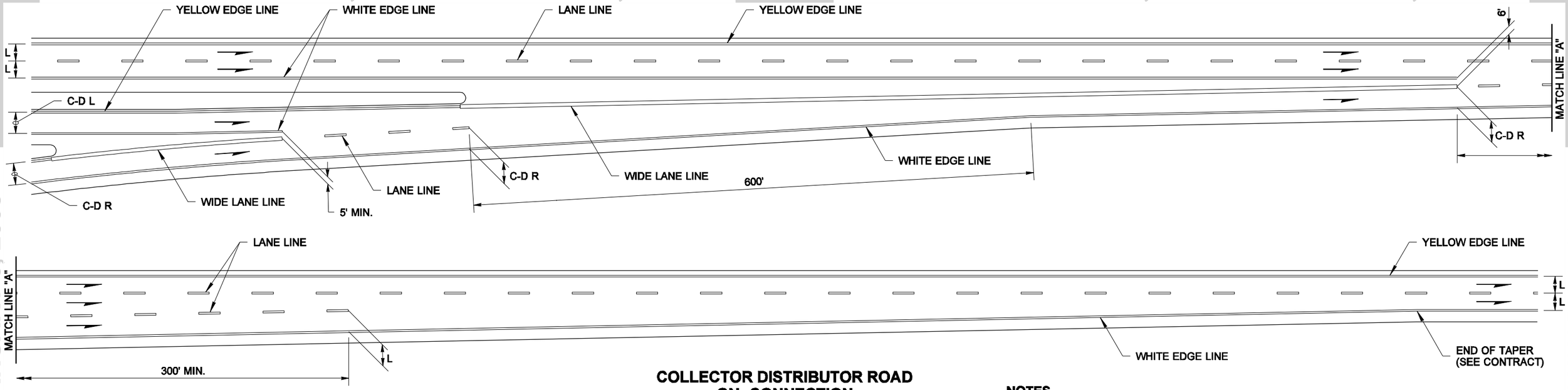

COLLECTOR DISTRIBUTOR ROAD ON- CONNECTION

LEGEND

C-D R = COLLECTOR DISTRIBUTOR RAMP LANE WIDTH

C-D L = COLLECTOR DISTRIBUTOR LANE WIDTH

R = RAMP LANE WIDTH

L = LANE WIDTH

NOTES

1. Where shown on the plans or specified in the Special Provisions, raised pavement markers shall be used for supplementing or substituting the painted pavement markings shown hereon. See the Standard Plans for RPM supplement and substitution patterns.
2. The channelization shown on this plan assumes optimal geometric design. The dimensions may vary to fit existing conditions. See Contract.

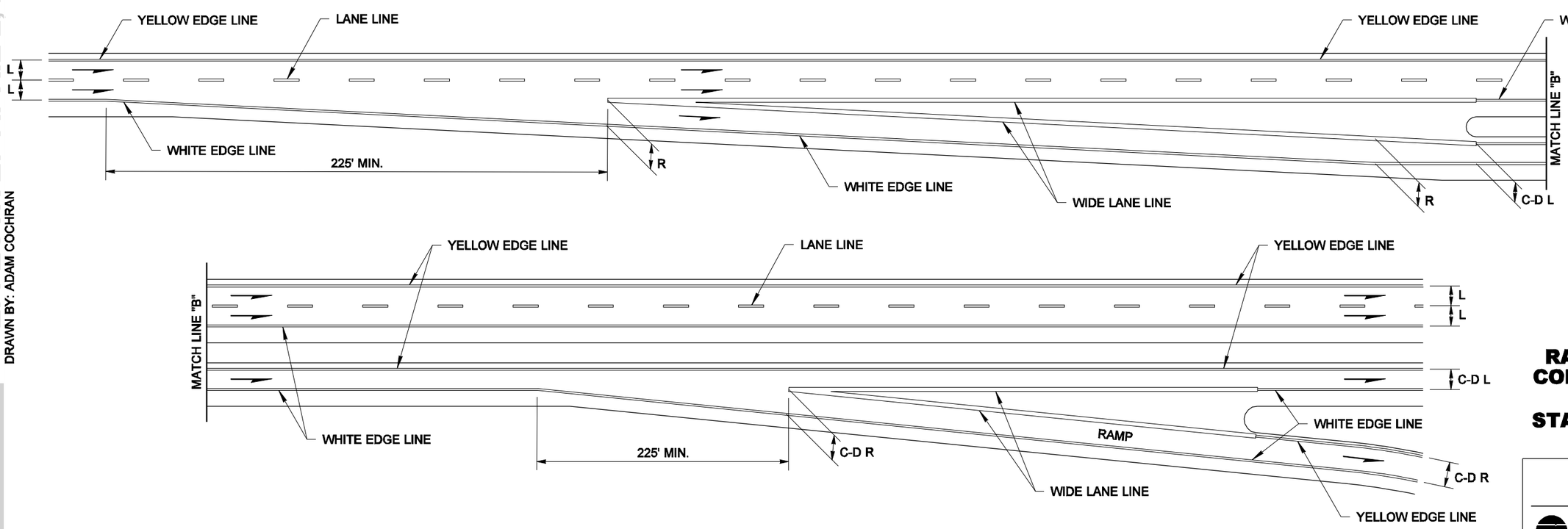

COLLECTOR DISTRIBUTOR ROAD OFF- CONNECTION

DRAWN BY: ADAM COCHRAN

THEODORE J. TREPANIER
STATE OF WASHINGTON
25335
REGISTERED
PROFESSIONAL ENGINEER

EXPIRES AUGUST 9, 2007

NOTE: THIS PLAN IS NOT A LEGAL ENGINEERING DOCUMENT BUT AN ELECTRONIC DUPLICATE. THE ORIGINAL, SIGNED BY THE ENGINEER AND APPROVED FOR PUBLICATION, IS KEPT ON FILE AT THE WASHINGTON STATE DEPARTMENT OF TRANSPORTATION. A COPY MAY BE OBTAINED UPON REQUEST.

RAMP CHANNELIZATION COLLECTOR DISTRIBUTOR ROAD

STANDARD PLAN M-1.60-01

SHEET 1 OF 1 SHEET

APPROVED FOR PUBLICATION

Ken L. Smith — STATE DESIGN ENGINEER

01-30-07 — DATE

Washington State Department of Transportation

EFFECTIVE: APRIL 2, 2007 TO JANUARY 6, 2008
EFFECTIVE: APRIL 2, 2007 TO JANUARY 6, 2008

EFFECTIVE: APRIL 2, 2007 TO JANUARY 6, 2008

NOTES

1. Where shown on the plans or specified in the Special Provisions, raised pavement markers shall be used for supplementing or substituting the painted pavement markings shown hereon. See the Standard Plans for RPM supplement and substitution patterns.
2. When weaving section is more than 3/4 of a mile in length use lane line.
3. The channelization shown on this plan assumes optimal roadway geometric design. The dimensions may vary to fit existing conditions. See Contract.

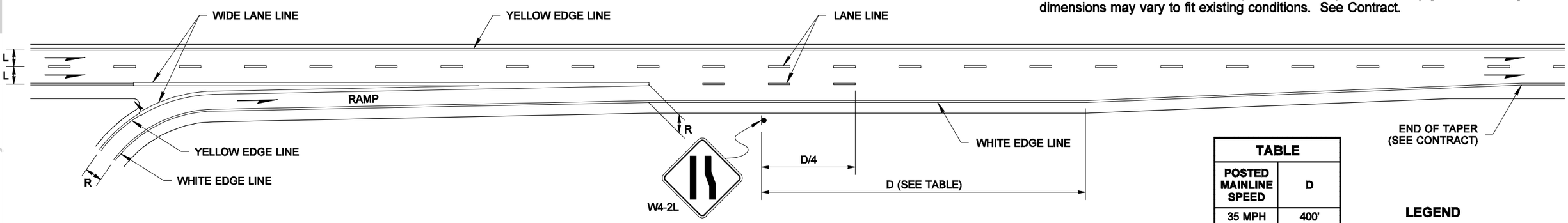

SINGLE LANE, PARALLEL TYPE ON- CONNECTION

TABLE	
POSTED MAINLINE SPEED	D
35 MPH	400'
40 MPH	475'
45 MPH	550'
50 MPH	625'
55 MPH	700'
60 MPH	775'

LEGEND

L = LANE WIDTH
R = RAMP LANE WIDTH

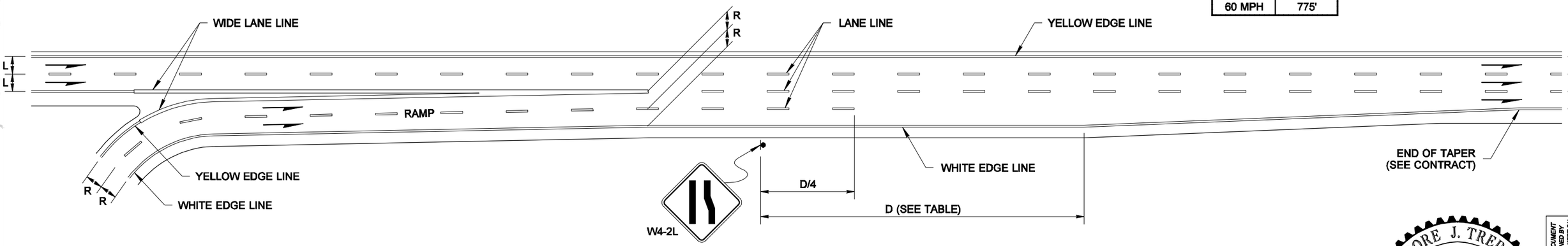

DOUBLE LANE, PARALLEL TYPE ON- CONNECTION

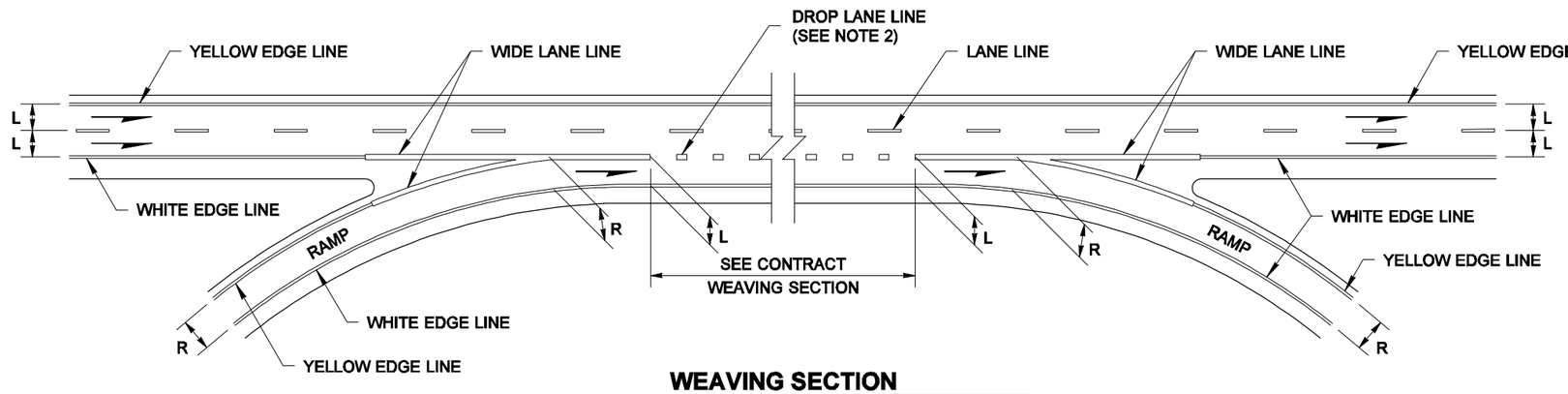

WEAVING SECTION

DRAWN BY: ADAM COCHRAN

THEODORE J. TREPANIER
STATE OF WASHINGTON
25335
REGISTERED
PROFESSIONAL ENGINEER

EXPIRES AUGUST 9, 2007

NOTE: THIS PLAN IS NOT A LEGAL ENGINEERING DOCUMENT BUT AN ELECTRONIC DUPLICATE. THE ORIGINAL, SIGNED BY THE ENGINEER AND APPROVED FOR PUBLICATION, IS KEPT ON FILE AT THE WASHINGTON STATE DEPARTMENT OF TRANSPORTATION. A COPY MAY BE OBTAINED UPON REQUEST.

RAMP CHANNELIZATION PARALLEL ON & WEAVING SECTION

STANDARD PLAN M-1.80-01

SHEET 1 OF 1 SHEET

APPROVED FOR PUBLICATION

Ken L. Smith — STATE DESIGN ENGINEER
01-30-07 — DATE

Washington State Department of Transportation

EFFECTIVE: APRIL 2, 2007 TO JANUARY 6, 2008

EFFECTIVE: APRIL 2, 2007 TO JANUARY 6, 2008
EFFECTIVE: APRIL 2, 2007 TO JANUARY 6, 2008

DRAWN BY: ADAM COCHRAN

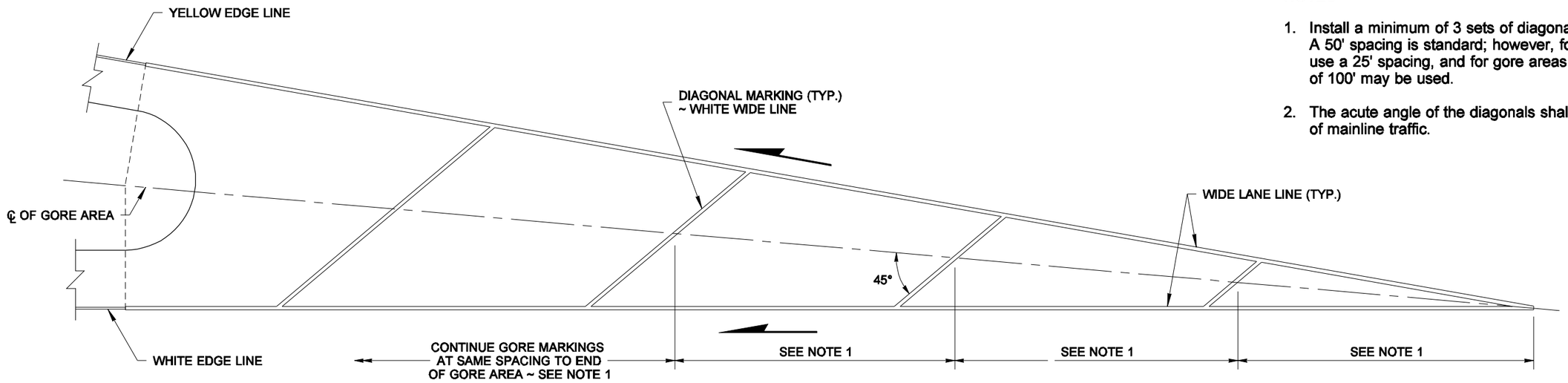

GORE AREA MARKING LAYOUT
WITH DIAGONALS

NOTES

1. Install a minimum of 3 sets of diagonals/chevrons in the gore area. A 50' spacing is standard; however, for gore areas shorter than 150' use a 25' spacing, and for gore areas greater than 400' a spacing of 100' may be used.
2. The acute angle of the diagonals shall always point in the direction of mainline traffic.

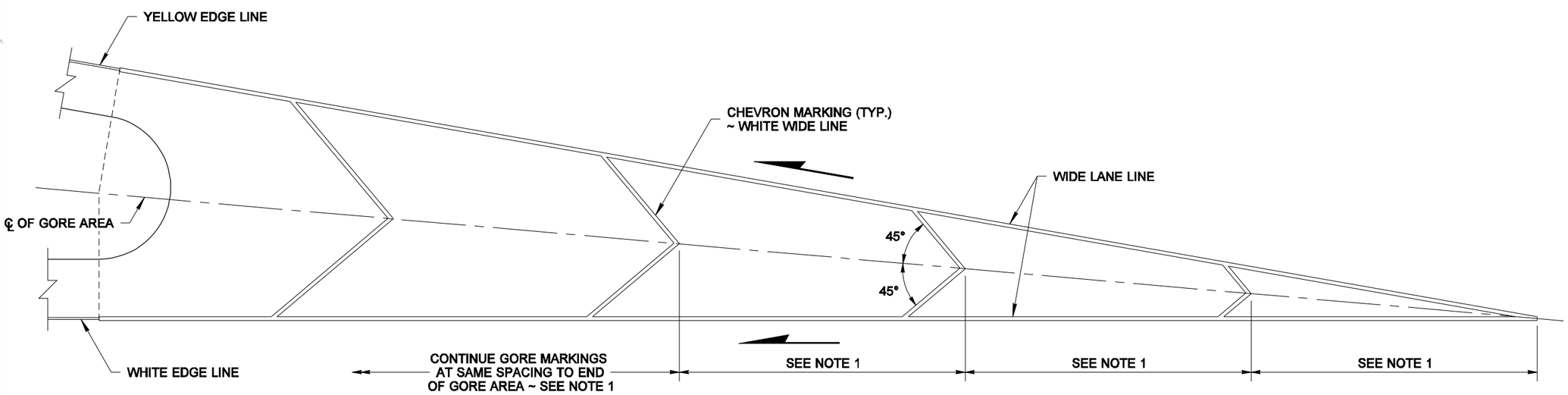

GORE AREA MARKING LAYOUT
WITH CHEVRONS

THEODORE J. TREPANIER
STATE OF WASHINGTON
25335
REGISTERED
PROFESSIONAL ENGINEER

EXPIRES AUGUST 9, 2007

NOTE: THIS PLAN IS NOT A LEGAL ENGINEERING DOCUMENT BUT AN ELECTRONIC DUPLICATE. THE ORIGINAL, SIGNED BY THE ENGINEER AND APPROVED FOR PUBLICATION, IS KEPT ON FILE AT THE WASHINGTON STATE DEPARTMENT OF TRANSPORTATION. A COPY MAY BE OBTAINED UPON REQUEST.

GORE AREA MARKING LAYOUTS

STANDARD PLAN M-2.20-01

SHEET 1 OF 1 SHEET

APPROVED FOR PUBLICATION

Ken L. Smith — STATE DESIGN ENGINEER
01-30-07 — DATE

Washington State Department of Transportation

EFFECTIVE: APRIL 2, 2007 TO JANUARY 6, 2008
EFFECTIVE: APRIL 2, 2007 TO JANUARY 6, 2008

EFFECTIVE: APRIL 2, 2007 TO JANUARY 6, 2008
EFFECTIVE: APRIL 2, 2007 TO JANUARY 6, 2008

DRAWN BY: ADAM COCHRAN

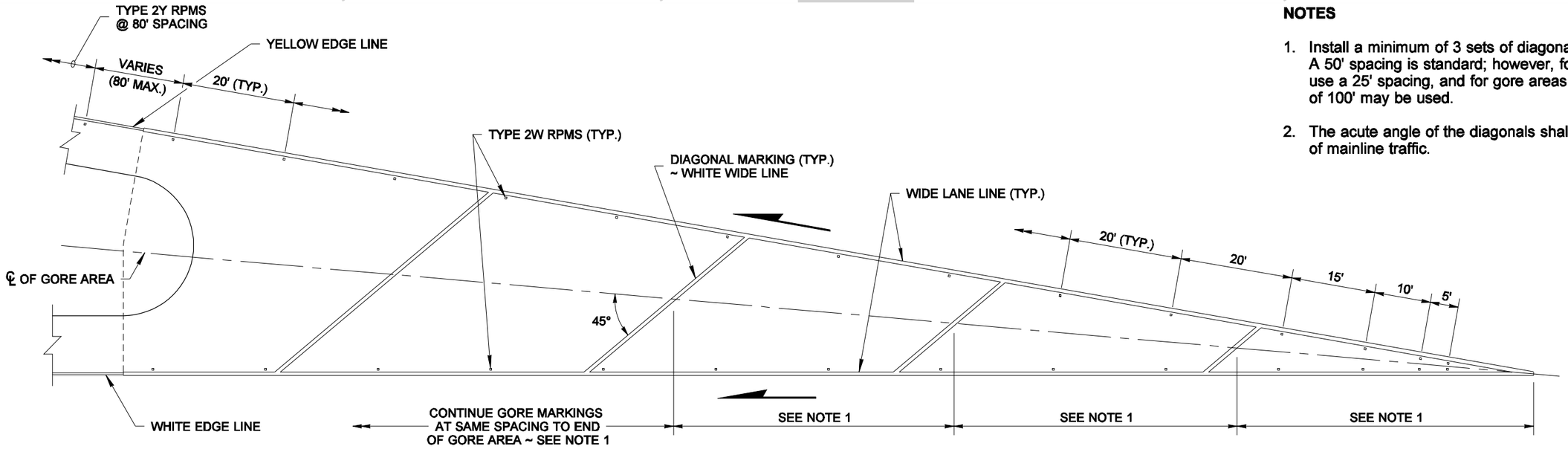

GORE AREA MARKING LAYOUT
WITH DIAGONALS

NOTES

1. Install a minimum of 3 sets of diagonals/chevrons in the gore area. A 50' spacing is standard; however, for gore areas shorter than 150' use a 25' spacing, and for gore areas greater than 400' a spacing of 100' may be used.
2. The acute angle of the diagonals shall always point in the direction of mainline traffic.

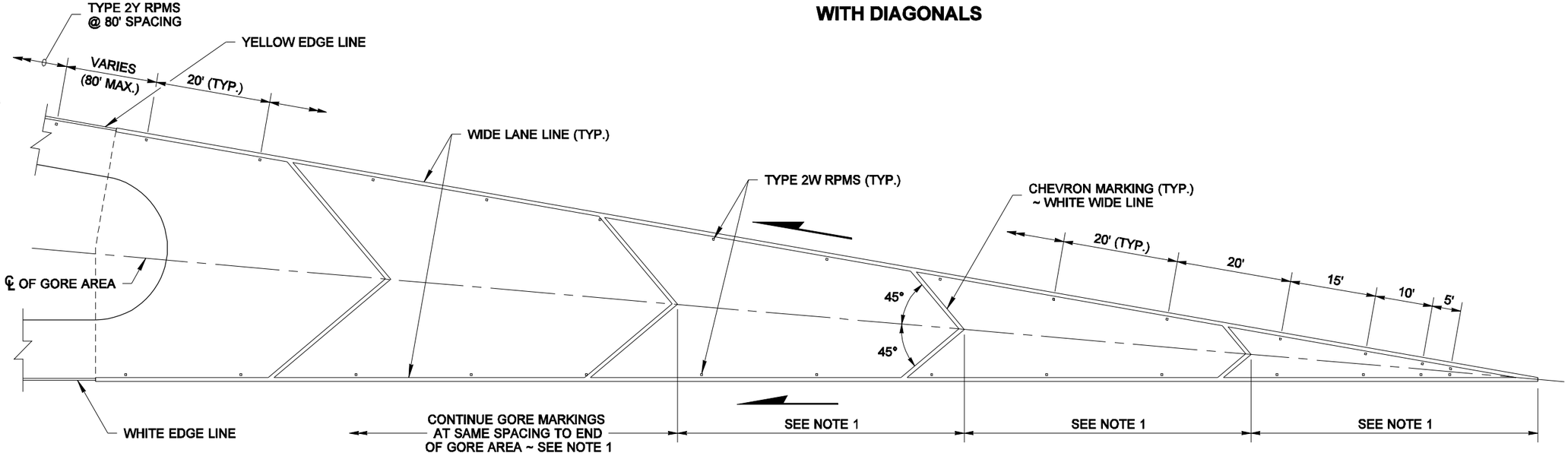

GORE AREA MARKING LAYOUT
WITH CHEVRONS

THEODORE J. TREPANIER
STATE OF WASHINGTON
25335
REGISTERED
PROFESSIONAL ENGINEER

EXPIRES AUGUST 9, 2007

NOTE: THIS PLAN IS NOT A LEGAL ENGINEERING DOCUMENT BUT AN ELECTRONIC DUPLICATE. THE ORIGINAL, SIGNED BY THE ENGINEER, AND APPROVED FOR PUBLICATION, IS KEPT ON FILE AT THE WASHINGTON STATE DEPARTMENT OF TRANSPORTATION. A COPY MAY BE OBTAINED UPON REQUEST.

GORE AREA SUPPLEMENT WITH TYPE 2 RAISED PAVEMENT MARKERS STANDARD PLAN M-2.40-01

SHEET 1 OF 1 SHEET

APPROVED FOR PUBLICATION

Ken L. Smith — STATE DESIGN ENGINEER
01-30-07 — DATE

Washington State Department of Transportation

EFFECTIVE: APRIL 2, 2007 TO JANUARY 6, 2008
EFFECTIVE: APRIL 2, 2007 TO JANUARY 6, 2008

EFFECTIVE: APRIL 2, 2007 TO JANUARY 6, 2008
EFFECTIVE: APRIL 2, 2007 TO JANUARY 6, 2008

DRAWN BY: ADAM COCHRAN

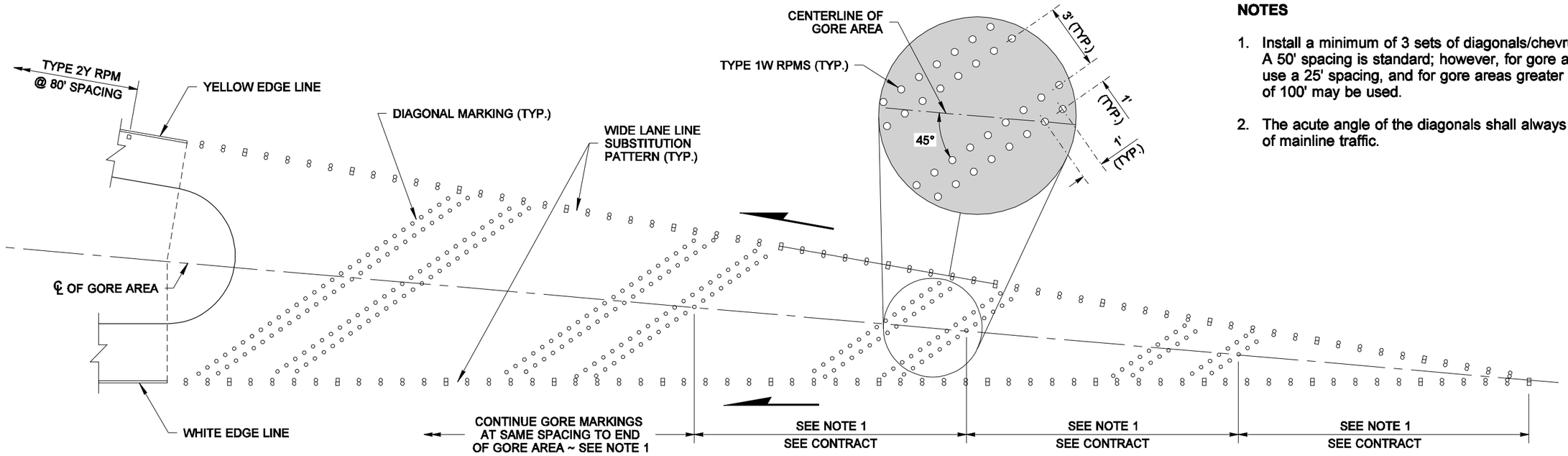

GORE AREA MARKINGS
WITH DIAGONALS

NOTES

1. Install a minimum of 3 sets of diagonals/chevrons in the gore area. A 50' spacing is standard; however, for gore areas shorter than 150' use a 25' spacing, and for gore areas greater than 400' a spacing of 100' may be used.

2. The acute angle of the diagonals shall always point in the direction of mainline traffic.

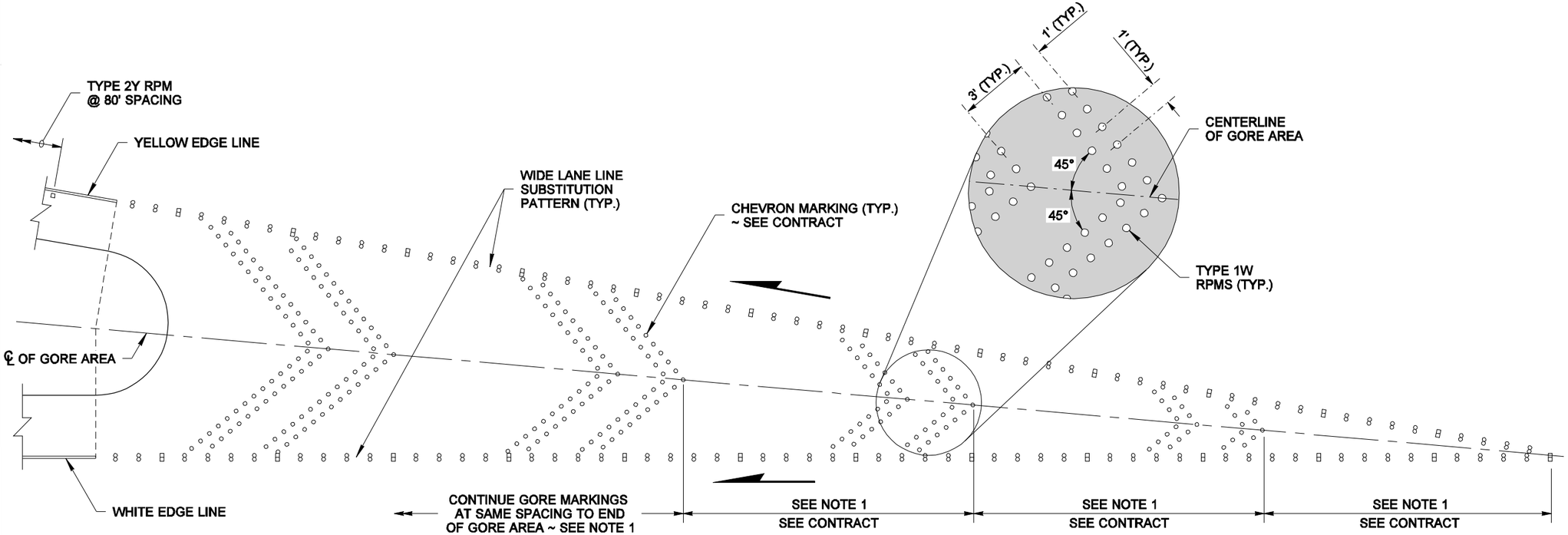

GORE AREA MARKINGS
WITH CHEVRONS

THEODORE J. TREPANIER
STATE OF WASHINGTON
25335
REGISTERED
PROFESSIONAL ENGINEER

EXPIRES AUGUST 9, 2007

NOTE: THIS PLAN IS NOT A LEGAL ENGINEERING DOCUMENT BUT AN ELECTRONIC DUPLICATE. THE ORIGINAL, SIGNED BY THE ENGINEER AND APPROVED FOR PUBLICATION, IS KEPT ON FILE AT THE WASHINGTON STATE DEPARTMENT OF TRANSPORTATION. A COPY MAY BE OBTAINED UPON REQUEST.

GORE AREA SUBSTITUTION WITH TYPES 1 & 2 RAISED PAVEMENT MARKERS STANDARD PLAN M-2.60-01

SHEET 1 OF 1 SHEET

APPROVED FOR PUBLICATION

Ken L. Smith — STATE DESIGN ENGINEER — *01-30-07* — DATE

Washington State Department of Transportation

EFFECTIVE: APRIL 2, 2007 TO JANUARY 6, 2008
EFFECTIVE: APRIL 2, 2007 TO JANUARY 6, 2008

EFFECTIVE: APRIL 2, 2007 TO JANUARY 6, 2008

EFFECTIVE: APRIL 2, 2007 TO JANUARY 6, 2008

EFFECTIVE: APRIL 2, 2007 TO JANUARY 6, 2008

DRAWN BY: BILL BERENS

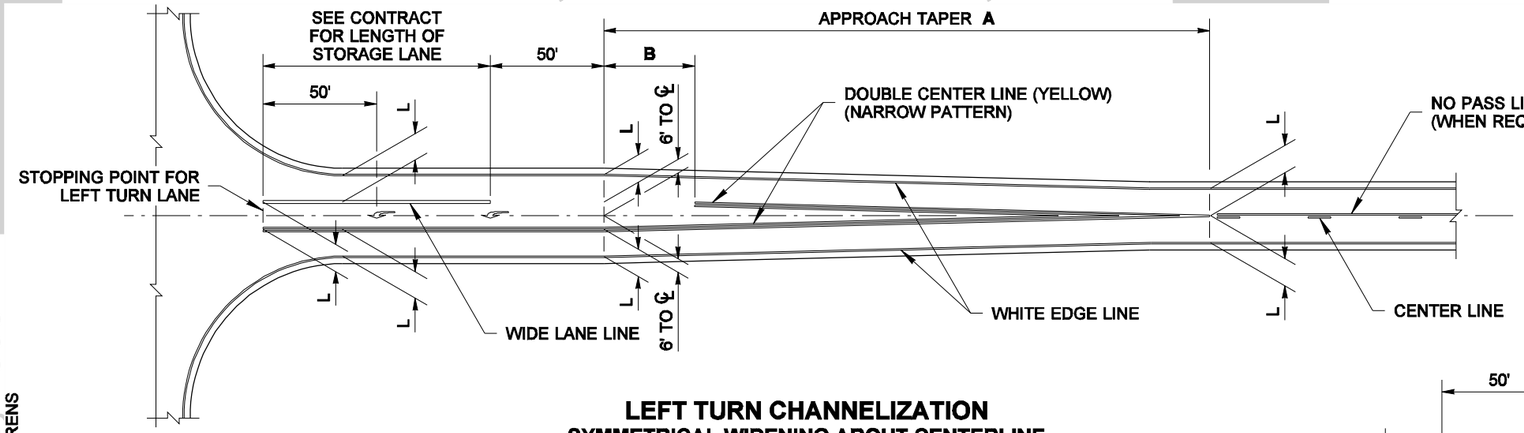

LEFT TURN CHANNELIZATION
SYMMETRICAL WIDENING ABOUT CENTERLINE

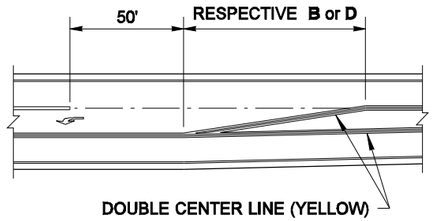

OPTIONAL MARKED DECELERATION TAPER

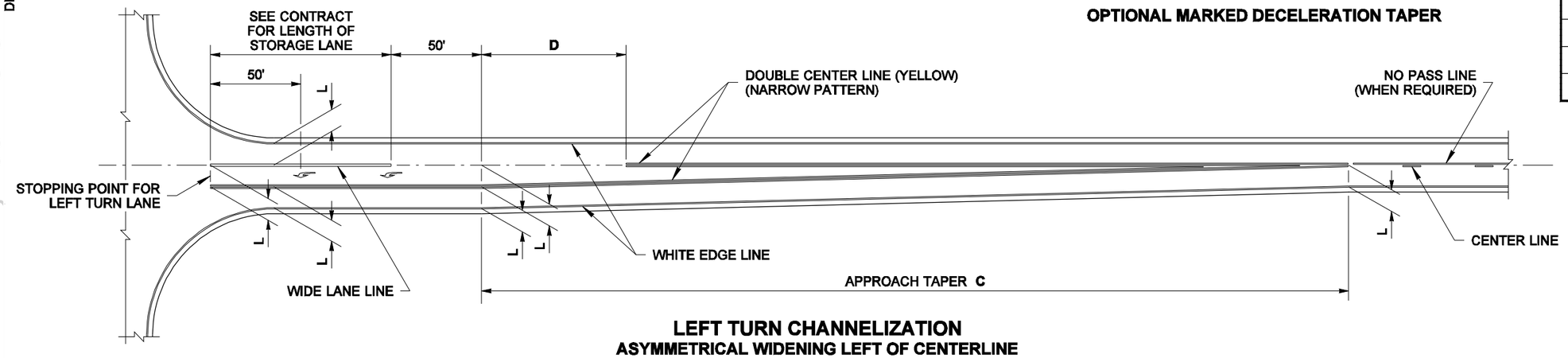

LEFT TURN CHANNELIZATION
ASYMMETRICAL WIDENING LEFT OF CENTERLINE

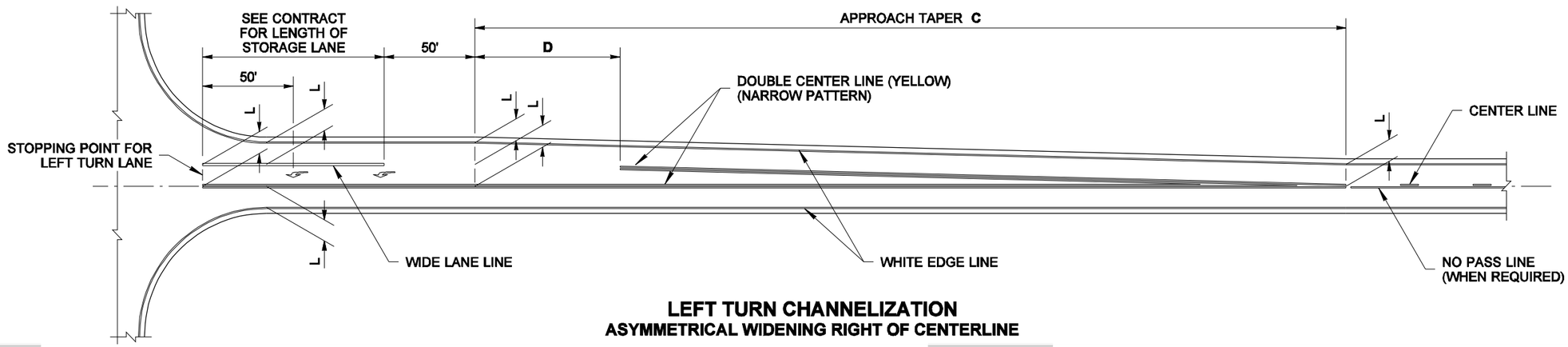

LEFT TURN CHANNELIZATION
ASYMMETRICAL WIDENING RIGHT OF CENTERLINE

GENERAL NOTES

1. The channelization shown on this plan assumes optimal roadway geometric design. The dimensions may vary to fit existing conditions. See Contract.

L = 12' Typical Lane Width. See Contract for specified lane widths.

LEGEND

Type 2L Traffic Arrow

POSTED SPEED	APPROACH TAPER A	DIMENSION B	APPROACH TAPER C	DIMENSION D
60 MPH	360'	60'	720'	120'
55 MPH	330'	55'	660'	110'
50 MPH	300'	50'	600'	100'
45 MPH	270'	45'	540'	90'
40 MPH	240'	40'	480'	80'
35 MPH	210'	35'	420'	70'
30 MPH	180'	30'	360'	60'
25 MPH	150'	25'	300'	50'
20 MPH	120'	20'	240'	40'



EXPIRES AUGUST 9, 2007

NOTE: THIS PLAN IS NOT A LEGAL ENGINEERING DOCUMENT BUT AN ELECTRONIC DUPLICATE. THE ORIGINAL, SIGNED BY THE ENGINEER AND APPROVED FOR PUBLICATION, IS KEPT ON FILE AT THE WASHINGTON STATE DEPARTMENT OF TRANSPORTATION. A COPY MAY BE OBTAINED UPON REQUEST.

LEFT TURN CHANNELIZATION

STANDARD PLAN M-3.10-01

SHEET 1 OF 1 SHEET

APPROVED FOR PUBLICATION

Ken L. Smith — STATE DESIGN ENGINEER

01-30-07 — DATE

Washington State Department of Transportation

EFFECTIVE: APRIL 2, 2007 TO JANUARY 6, 2008

EFFECTIVE: APRIL 2, 2007 TO JANUARY 6, 2008

EFFECTIVE: APRIL 2, 2007 TO JANUARY 6, 2008

EFFECTIVE: APRIL 2, 2007 TO JANUARY 6, 2008

EFFECTIVE: APRIL 2, 2007 TO JANUARY 6, 2008

DRAWN BY: BILL BERENS

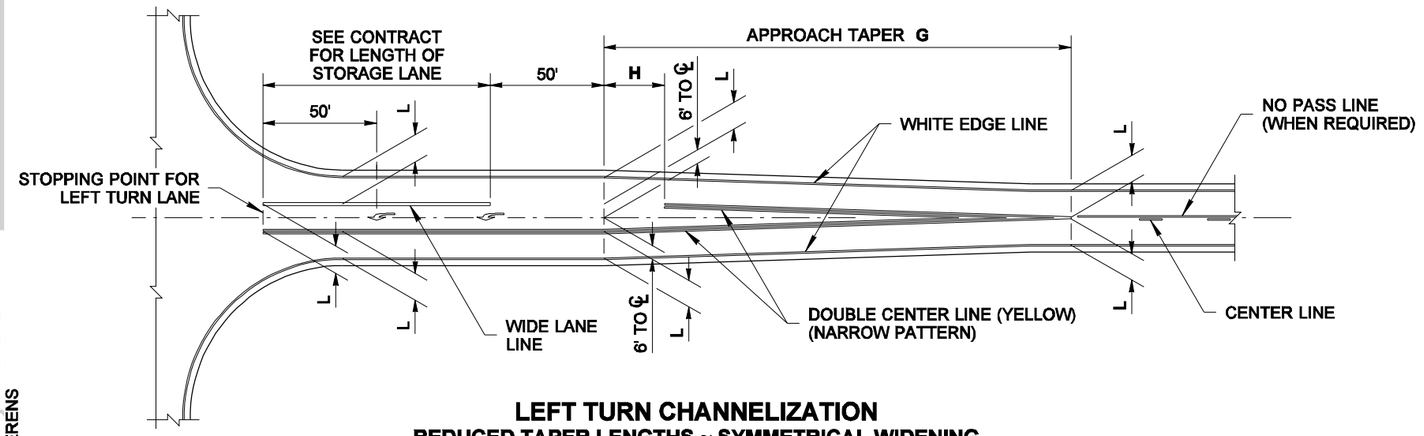

LEFT TURN CHANNELIZATION
REDUCED TAPER LENGTHS ~ SYMMETRICAL WIDENING
(FOR LIMITED USE IN URBAN AREAS WITH POSTED SPEEDS OF 40 MPH OR LESS)

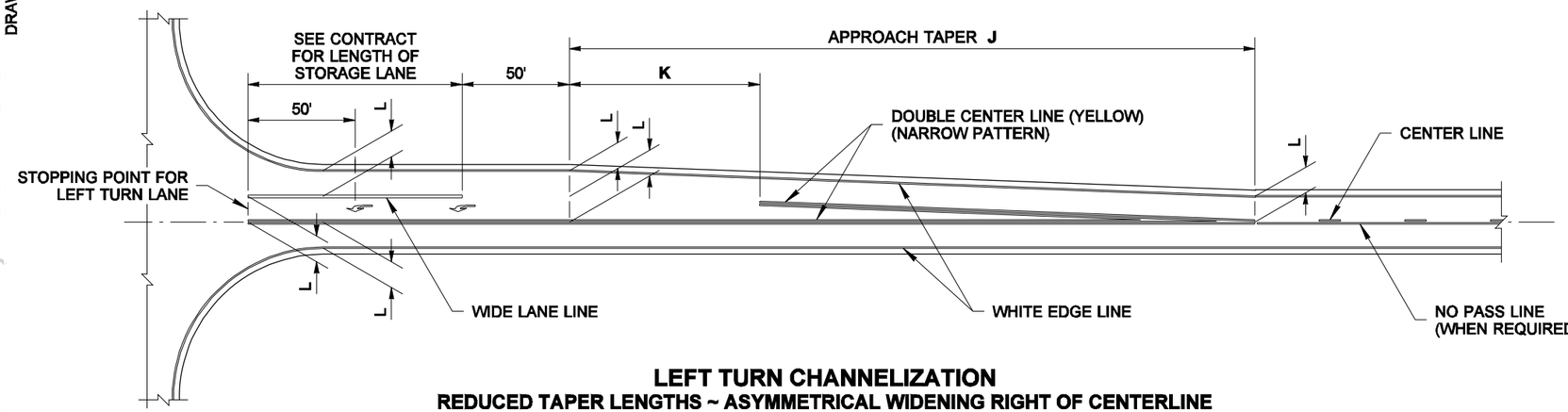

LEFT TURN CHANNELIZATION
REDUCED TAPER LENGTHS ~ ASYMMETRICAL WIDENING RIGHT OF CENTERLINE
(FOR LIMITED USE IN URBAN AREAS WITH POSTED SPEEDS OF 40 MPH OR LESS)

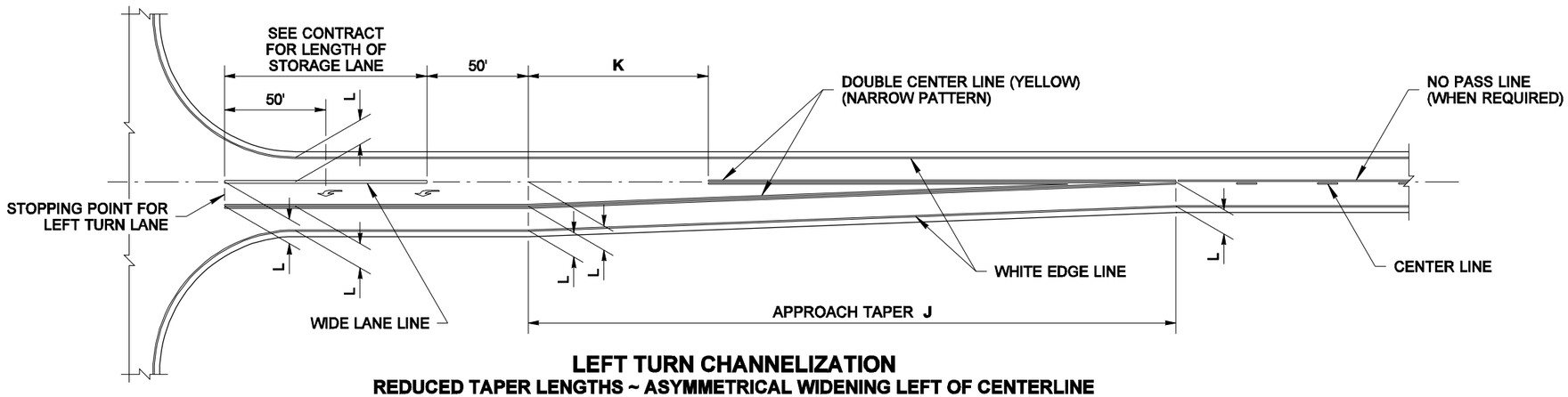

LEFT TURN CHANNELIZATION
REDUCED TAPER LENGTHS ~ ASYMMETRICAL WIDENING LEFT OF CENTERLINE
(FOR LIMITED USE IN URBAN AREAS WITH POSTED SPEEDS OF 40 MPH OR LESS)

GENERAL NOTES

1. The channelization shown on this plan assumes optimal roadway geometric design. The dimensions may vary to fit existing conditions. See Contract.

L = 12' Typical Lane Width. See Contract for specified lane widths.

LEGEND

Type 2L Traffic Arrow

POSTED SPEED	APPROACH TAPER G	DIMENSION H	APPROACH TAPER J	DIMENSION K
40 MPH	160'	27'	320'	53'
35 MPH	123'	20'	245'	41'
30 MPH	90'	15'	180'	30'
25 MPH	63'	10'	125'	21'
20 MPH	40'	7'	80'	13'

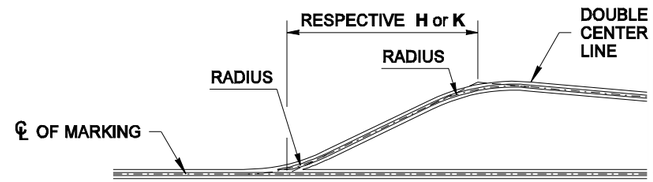

RADIUS = RESPECTIVE H or K

OPTIONAL MARKED DECELERATION TAPER
(FOR LIMITED USE IN URBAN AREAS)

THEODORE J. TREPANIER
STATE OF WASHINGTON
25335
REGISTERED
PROFESSIONAL ENGINEER

EXPIRES AUGUST 9, 2007

NOTE: THIS PLAN IS NOT A LEGAL ENGINEERING DOCUMENT BUT AN ELECTRONIC DUPLICATE. THE ORIGINAL, SIGNED BY THE ENGINEER AND APPROVED FOR PUBLICATION, IS KEPT ON FILE AT THE WASHINGTON STATE DEPARTMENT OF TRANSPORTATION. A COPY MAY BE OBTAINED UPON REQUEST.

LEFT TURN CHANNELIZATION REDUCED TAPERS STANDARD PLAN M-3.20-01

SHEET 1 OF 1 SHEET

APPROVED FOR PUBLICATION

Ken L. Smith — STATE DESIGN ENGINEER

01-30-07 — DATE

Washington State Department of Transportation

EFFECTIVE: APRIL 2, 2007 TO JANUARY 6, 2008

EFFECTIVE: APRIL 2, 2007 TO JANUARY 6, 2008

EFFECTIVE: APRIL 2, 2007 TO JANUARY 6, 2008

DRAWN BY: BILL BERENS

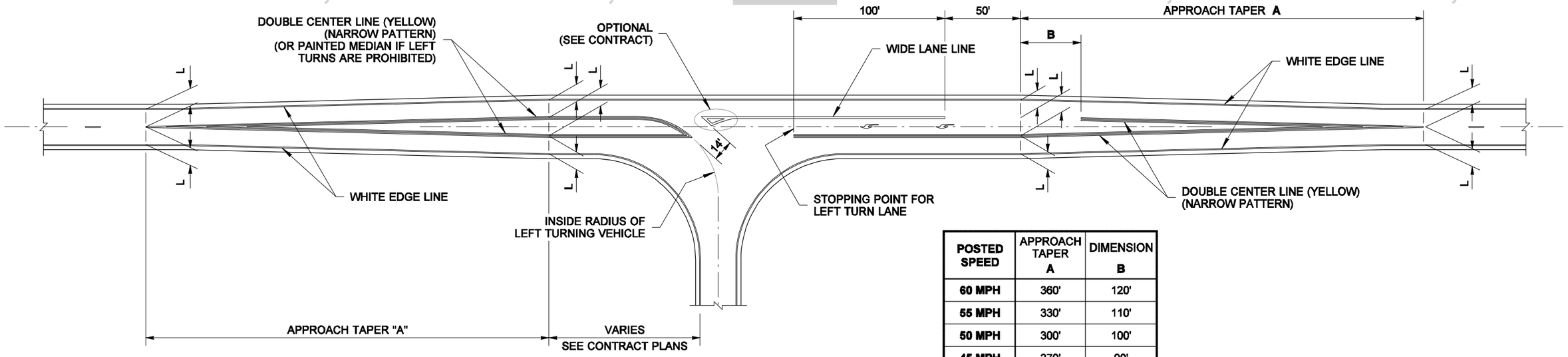

LEFT TURN CHANNELIZATION
TEE INTERSECTION

POSTED SPEED	APPROACH TAPER A	DIMENSION B
60 MPH	360'	120'
55 MPH	330'	110'
50 MPH	300'	100'
45 MPH	270'	90'
40 MPH	240'	80'
35 MPH	210'	70'
30 MPH	180'	60'
25 MPH	150'	50'
20 MPH	120'	40'

GENERAL NOTES

1. The channelization shown on this plan assumes optimal roadway geometric design. The dimensions may vary to fit existing conditions. See Contract.

L = 12' Typical Lane Width. See Contract for specified lane widths.

LEGEND

Type 2L Traffic Arrow

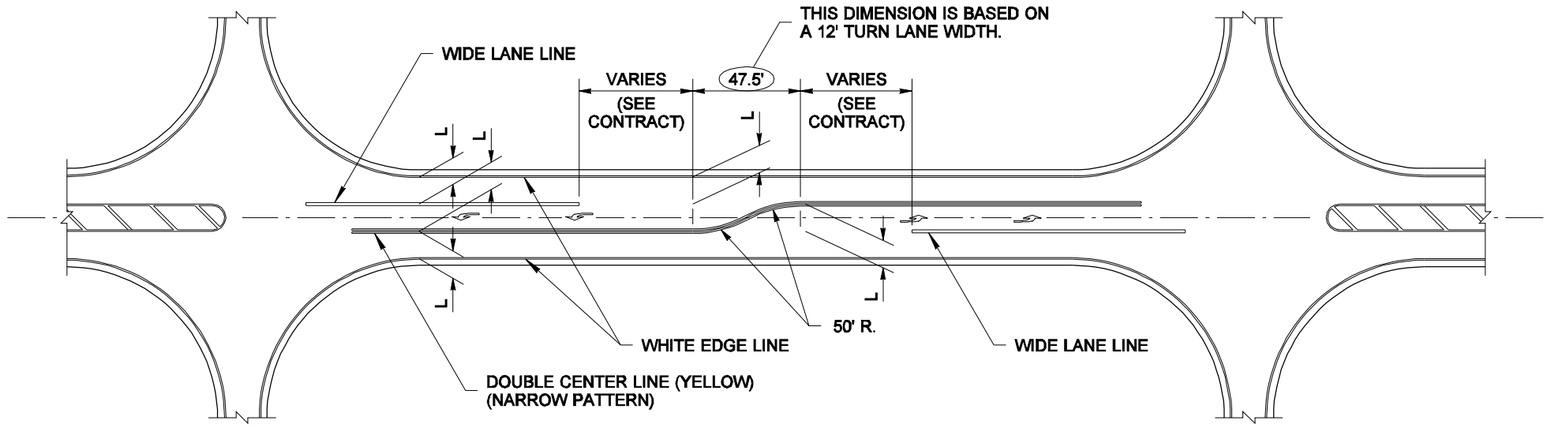

LEFT TURN CHANNELIZATION
BACK TO BACK LEFT TURN LANES

THEODORE J. TREPANIER
STATE OF WASHINGTON
25335
REGISTERED
PROFESSIONAL ENGINEER

EXPIRES AUGUST 9, 2007

NOTE: THIS PLAN IS NOT A LEGAL ENGINEERING DOCUMENT BUT AN ELECTRONIC DUPLICATE. THE ORIGINAL, SIGNED BY THE ENGINEER AND APPROVED FOR PUBLICATION, IS KEPT ON FILE AT THE WASHINGTON STATE DEPARTMENT OF TRANSPORTATION. A COPY MAY BE OBTAINED UPON REQUEST.

LEFT TURN CHANNELIZATION TEE INTERSECTION AND BACK-TO-BACK TURN LANES STANDARD PLAN M-3.30-01

SHEET 1 OF 1 SHEET

APPROVED FOR PUBLICATION

Ken L. Smith — STATE DESIGN ENGINEER — *01-30-07* — DATE

Washington State Department of Transportation

EFFECTIVE: APRIL 2, 2007 TO JANUARY 6, 2008

EFFECTIVE: APRIL 2, 2007 TO JANUARY 6, 2008
EFFECTIVE: APRIL 2, 2007 TO JANUARY 6, 2008

DRAWN BY: BILL BERENS

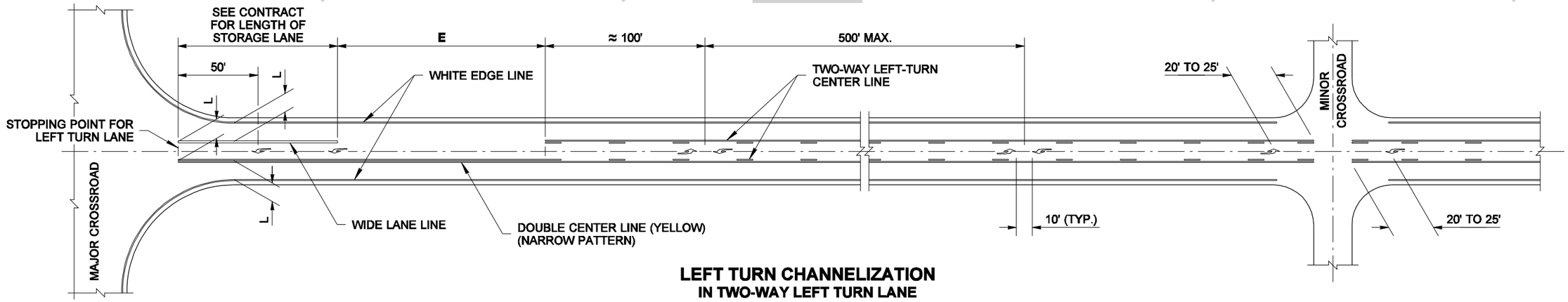

LEFT TURN CHANNELIZATION
IN TWO-WAY LEFT TURN LANE

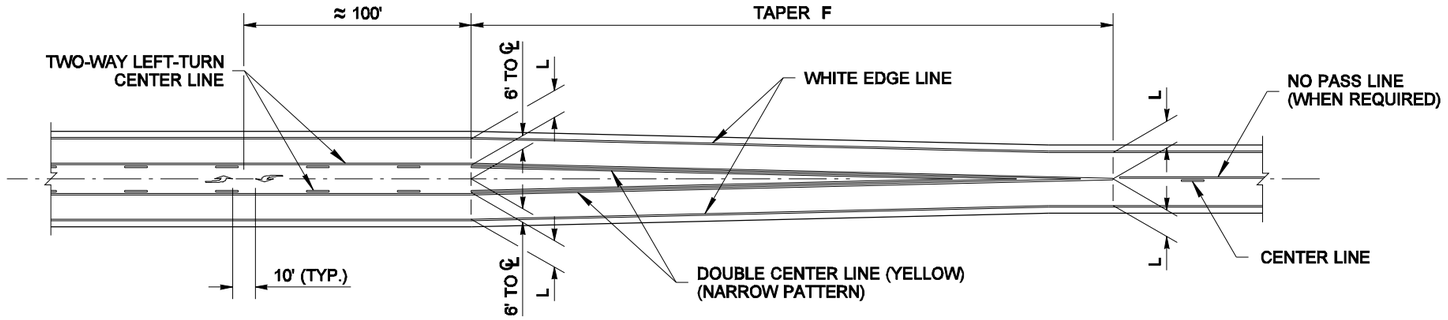

TWO-WAY LEFT TURN LANE TRANSITION

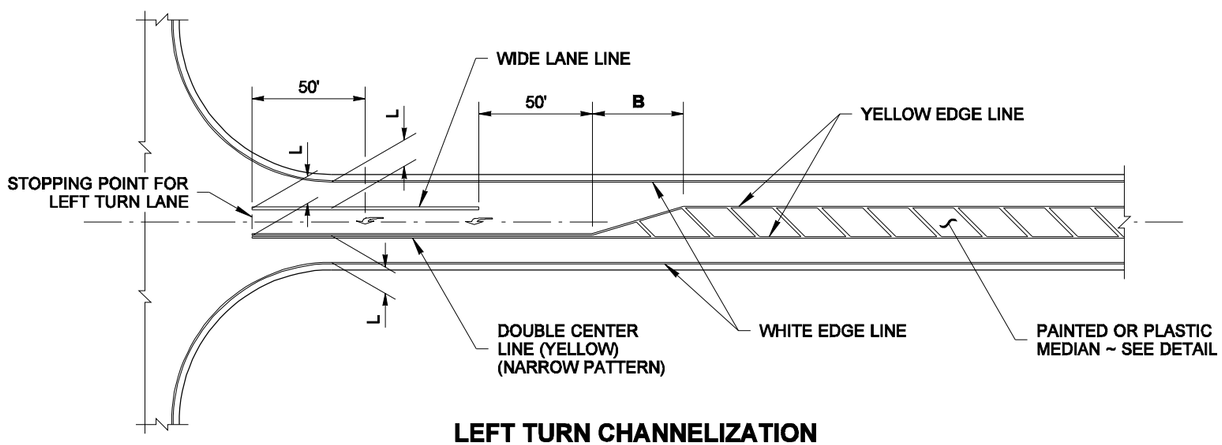

LEFT TURN CHANNELIZATION
IN PAINTED MEDIAN

POSTED SPEED	DIMENSION E	TAPER F	DIMENSION B
60 MPH	170'	360'	120'
55 MPH	160'	330'	110'
50 MPH	150'	300'	100'
45 MPH	140'	270'	90'
40 MPH	130'	240'	80'
35 MPH	120'	210'	70'
30 MPH	110'	180'	60'
25 MPH	100'	150'	50'
20 MPH	90'	120'	40'

GENERAL NOTES

1. The channelization shown on this plan assumes optimal roadway geometric design. The dimensions may vary to fit existing conditions. See Contract.

L = 12' Typical Lane Width. See Contract for specified lane widths.

LEGEND

Type 2L Traffic Arrow

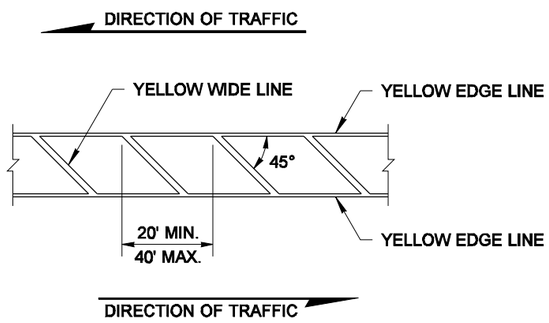

PAINTED OR PLASTIC MEDIAN
COMPOSED OF LONGITUDINAL MARKINGS

THEODORE J. TREPANIER
STATE OF WASHINGTON
25335
REGISTERED
PROFESSIONAL ENGINEER

EXPIRES AUGUST 9, 2007

NOTE: THIS PLAN IS NOT A LEGAL ENGINEERING DOCUMENT BUT AN ELECTRONIC DUPLICATE. THE ORIGINAL, SIGNED BY THE ENGINEER, AND APPROVED FOR PUBLICATION, IS KEPT ON FILE AT THE WASHINGTON STATE DEPARTMENT OF TRANSPORTATION. A COPY MAY BE OBTAINED UPON REQUEST.

TWO-WAY LEFT-TURN AND MEDIAN CHANNELIZATION
STANDARD PLAN M-3.40-01

SHEET 1 OF 1 SHEET

APPROVED FOR PUBLICATION

Ken L. Smith — STATE DESIGN ENGINEER
01-30-07 — DATE

Washington State Department of Transportation

EFFECTIVE: APRIL 2, 2007 TO JANUARY 6, 2008
EFFECTIVE: APRIL 2, 2007 TO JANUARY 6, 2008

EFFECTIVE: APRIL 2, 2007 TO JANUARY 6, 2008

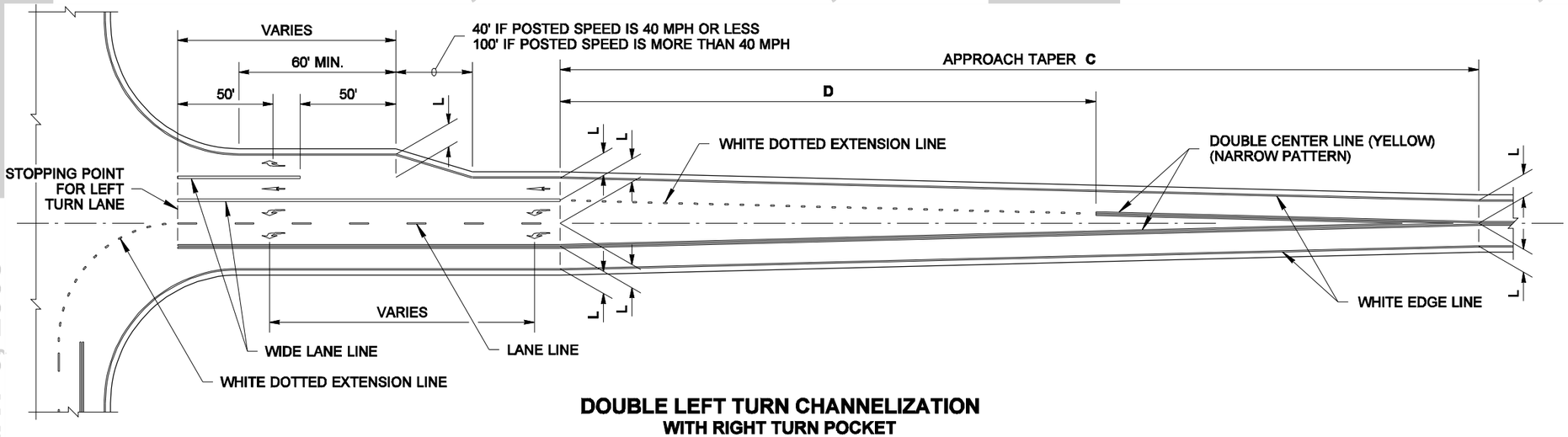

DOUBLE LEFT TURN CHANNELIZATION
WITH RIGHT TURN POCKET

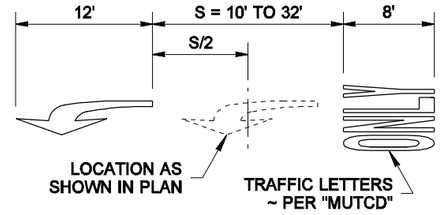

LANE MESSAGE DETAIL
OPTIONAL ~ SEE GENERAL NOTE 2

GENERAL NOTES

1. The channelization shown on this plan assumes optimal roadway geometric design. The dimensions may vary to fit existing conditions. See Contract.
2. The lane message "ONLY" may be added to the Traffic Arrow Type 2L locations shown, in which case, substitute the Arrow as per the LANE MESSAGE DETAIL.

POSTED SPEED	APPROACH TAPER C	D
60 MPH	720'	420'
55 MPH	660'	385'
50 MPH	600'	350'
45 MPH	540'	315'
40 MPH	480'	280'
35 MPH	420'	245'
30 MPH	360'	210'
25 MPH	300'	175'
20 MPH	240'	140'

L = 12' Typical Lane Width. See Contract for specified lane widths.

LEGEND

- Type 2L Traffic Arrow
- Type 2R Traffic Arrow
- Type 1 Traffic Arrow (Optional)

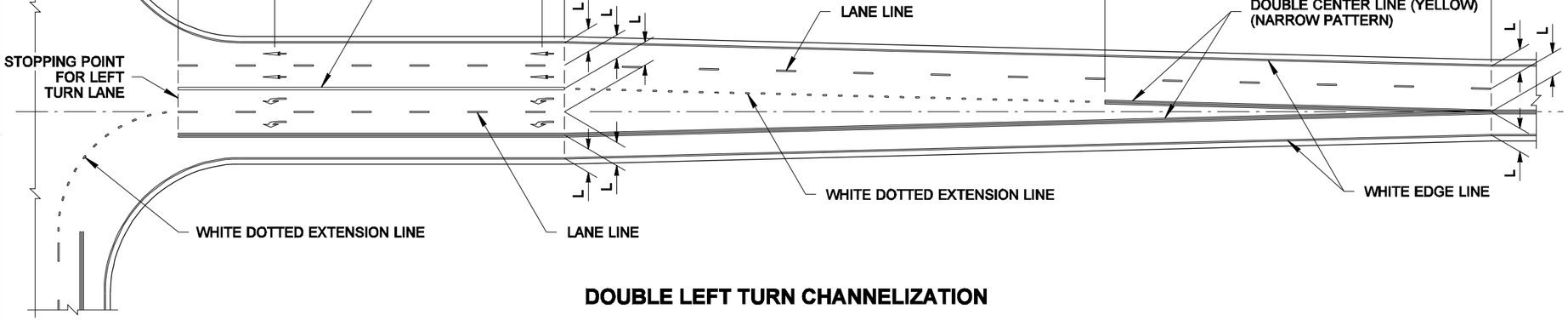

DOUBLE LEFT TURN CHANNELIZATION

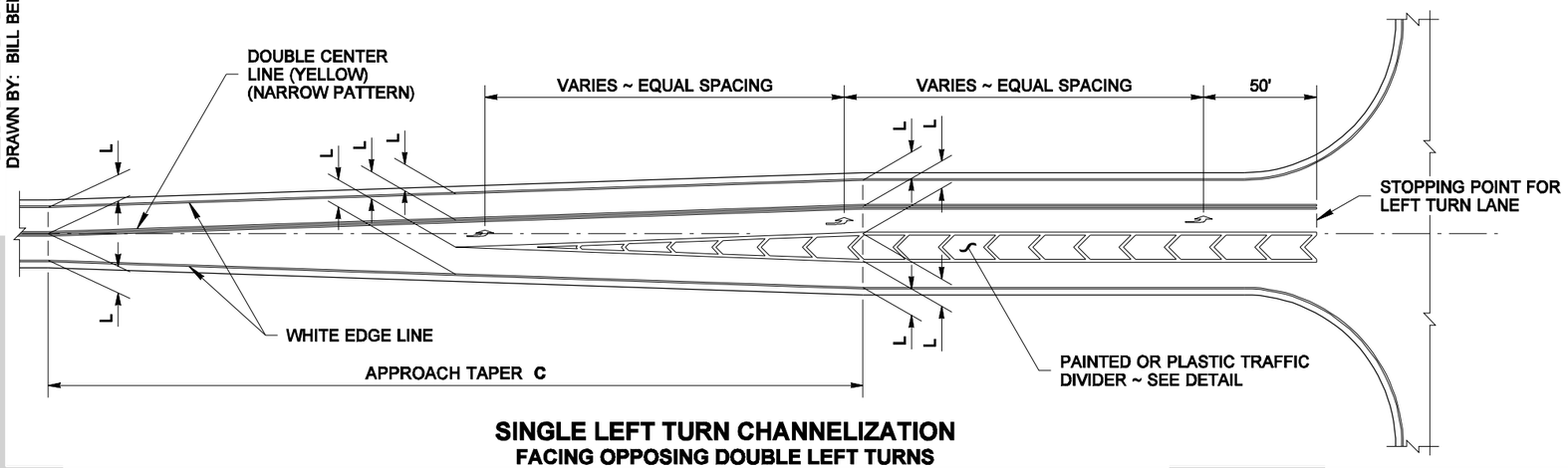

SINGLE LEFT TURN CHANNELIZATION
FACING OPPOSING DOUBLE LEFT TURNS

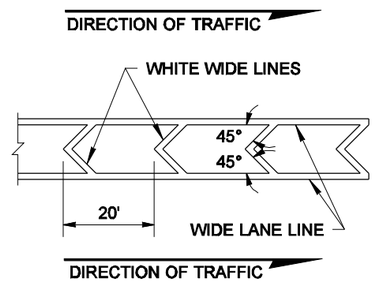

PAINTED OR PLASTIC TRAFFIC DIVIDER
COMPOSED OF LONGITUDINAL MARKINGS



EXPIRES AUGUST 9, 2007

NOTE: THIS PLAN IS NOT A LEGAL ENGINEERING DOCUMENT BUT AN ELECTRONIC DUPLICATE. THE ORIGINAL, SIGNED BY THE ENGINEER AND APPROVED FOR PUBLICATION, IS KEPT ON FILE AT THE WASHINGTON STATE DEPARTMENT OF TRANSPORTATION. A COPY MAY BE OBTAINED UPON REQUEST.

DOUBLE LEFT TURN CHANNELIZATION

STANDARD PLAN M-3.50-01

SHEET 1 OF 1 SHEET

APPROVED FOR PUBLICATION

Ken L. Smith — STATE DESIGN ENGINEER
01-30-07 — DATE

Washington State Department of Transportation

DRAWN BY: BILL BERENS

EFFECTIVE: APRIL 2, 2007 TO JANUARY 6, 2008

EFFECTIVE: APRIL 2, 2007 TO JANUARY 6, 2008

DRAWN BY: BILL BERENS

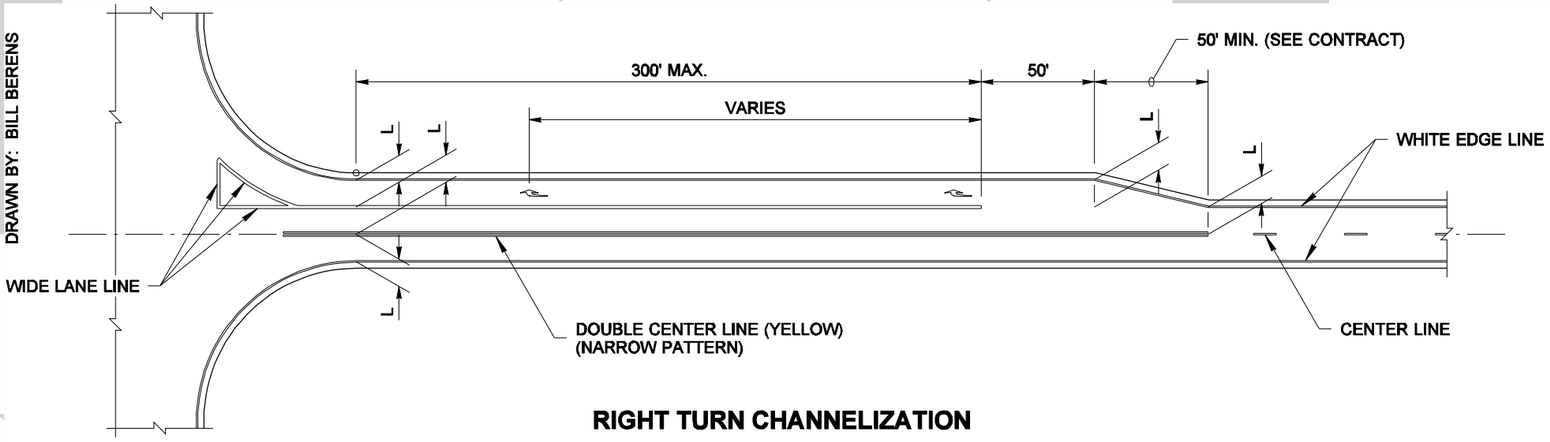

RIGHT TURN CHANNELIZATION

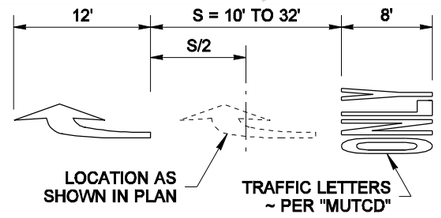

LANE MESSAGE DETAIL
OPTIONAL ~ SEE GENERAL NOTE 2

GENERAL NOTES

1. The channelization shown on this plan assumes optimal roadway geometric design. The dimensions may vary to fit existing conditions. See Contract.
2. The lane message "ONLY" may be added to the Traffic Arrow Type 2R locations shown, in which case, substitute the Arrow as per the LANE MESSAGE DETAIL.

L = 12' Typical Lane Width. See Contract for specified lane widths.

LEGEND

Type 2R Traffic Arrow

Type 3L Traffic Arrow

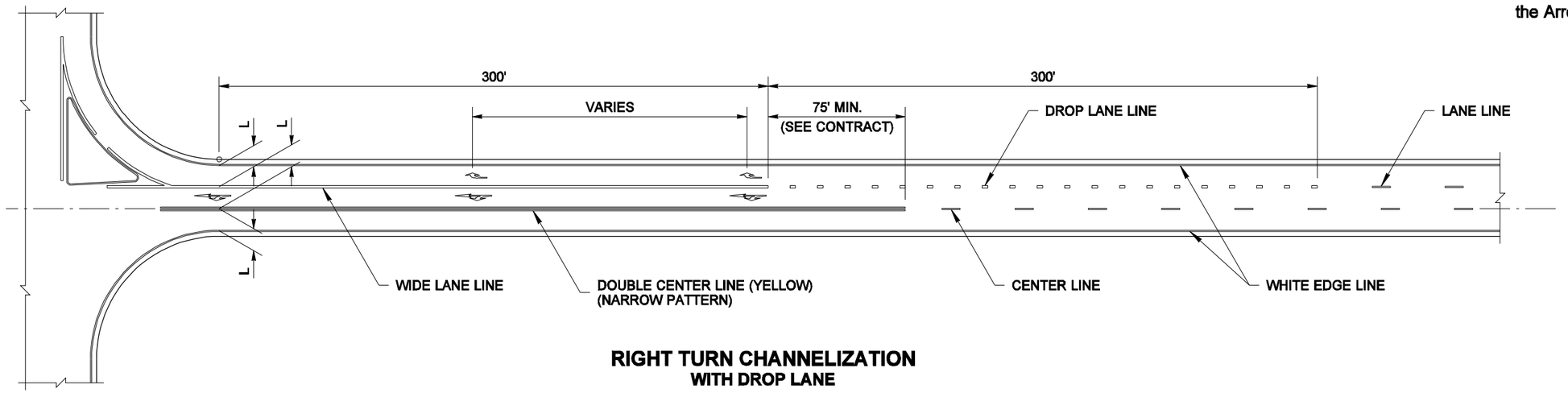

RIGHT TURN CHANNELIZATION
WITH DROP LANE

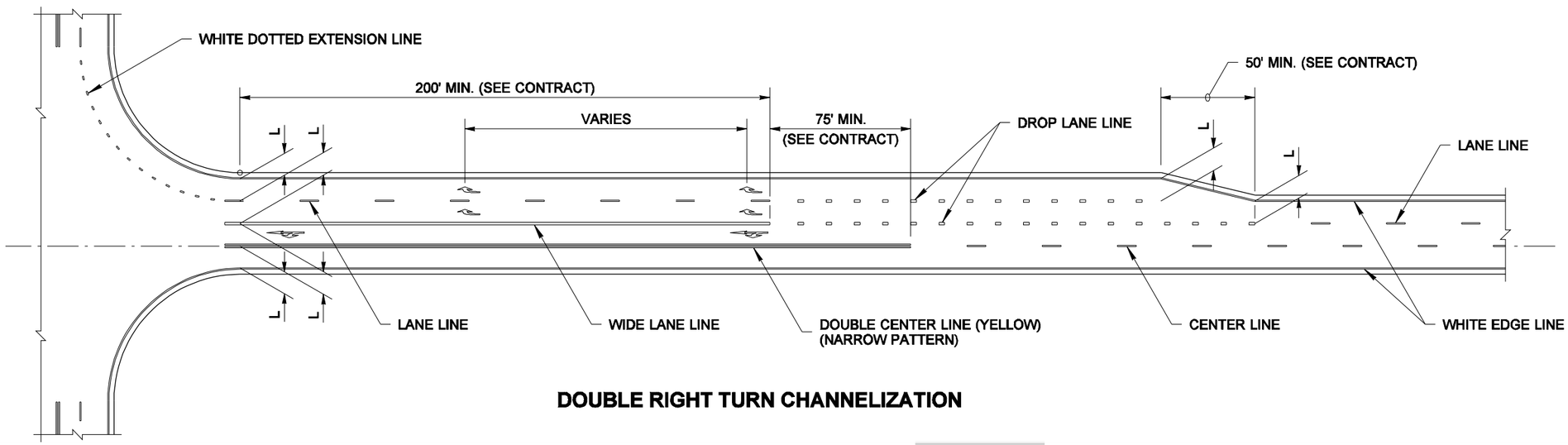

DOUBLE RIGHT TURN CHANNELIZATION

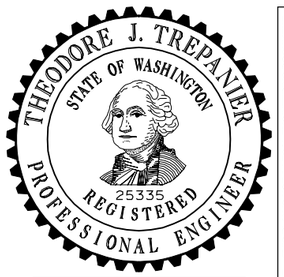

EXPIRES AUGUST 9, 2007

NOTE: THIS PLAN IS NOT A LEGAL ENGINEERING DOCUMENT BUT AN ELECTRONIC DUPLICATE. THE ORIGINAL, SIGNED BY THE ENGINEER AND APPROVED FOR PUBLICATION, IS KEPT ON FILE AT THE WASHINGTON STATE DEPARTMENT OF TRANSPORTATION. A COPY MAY BE OBTAINED UPON REQUEST.

RIGHT TURN CHANNELIZATION

STANDARD PLAN M-5.10-01

SHEET 1 OF 1 SHEET

APPROVED FOR PUBLICATION

Ken L. Smith — STATE DESIGN ENGINEER

01-30-07 — DATE

Washington State Department of Transportation

EFFECTIVE: APRIL 2, 2007 TO JANUARY 6, 2008

EFFECTIVE: APRIL 2, 2007 TO JANUARY 6, 2008

DRAWN BY: MARK SUJKA

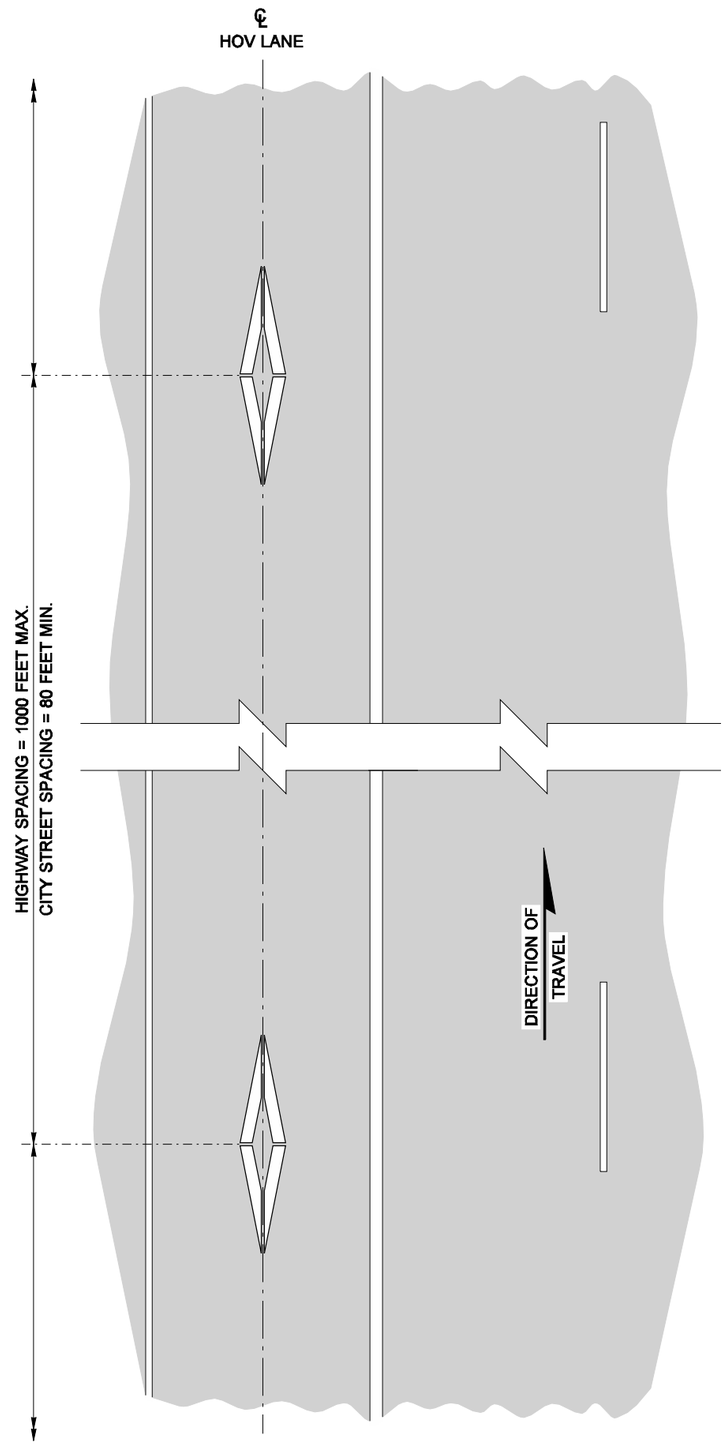

LAYOUT

NOTE

When Specified in the Contract Plans, the HOV Symbol Marking shall be installed with an offset of 1 foot max. from the lane centerline.

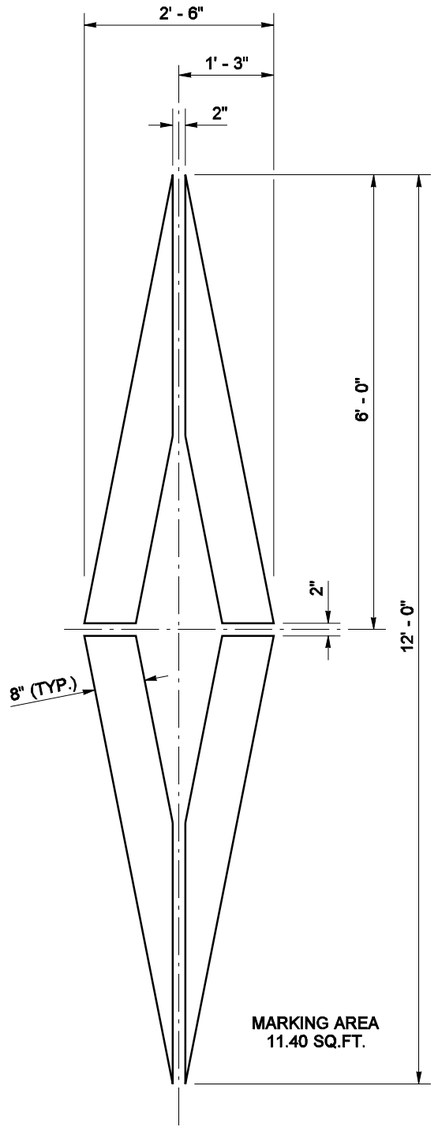

HOV LANE SYMBOL

THEODORE J. TREPANIER
STATE OF WASHINGTON
25335
REGISTERED
PROFESSIONAL ENGINEER

EXPIRES AUGUST 9, 2007

NOTE: THIS PLAN IS NOT A LEGAL ENGINEERING DOCUMENT BUT AN ELECTRONIC DUPLICATE. THE ORIGINAL, SIGNED BY THE ENGINEER AND APPROVED FOR PUBLICATION, IS KEPT ON FILE AT THE WASHINGTON STATE DEPARTMENT OF TRANSPORTATION. A COPY MAY BE OBTAINED UPON REQUEST.

HIGH OCCUPANCY VEHICLE (HOV) LANE SYMBOL LAYOUT

STANDARD PLAN M-7.50-01

SHEET 1 OF 1 SHEET

APPROVED FOR PUBLICATION

Ken L. Smith — STATE DESIGN ENGINEER

01-30-07 — DATE

Washington State Department of Transportation

EFFECTIVE: APRIL 2, 2007 TO JANUARY 6, 2008

EFFECTIVE: APRIL 2, 2007 TO JANUARY 6, 2008

DRAWN BY: MARK SUJKA

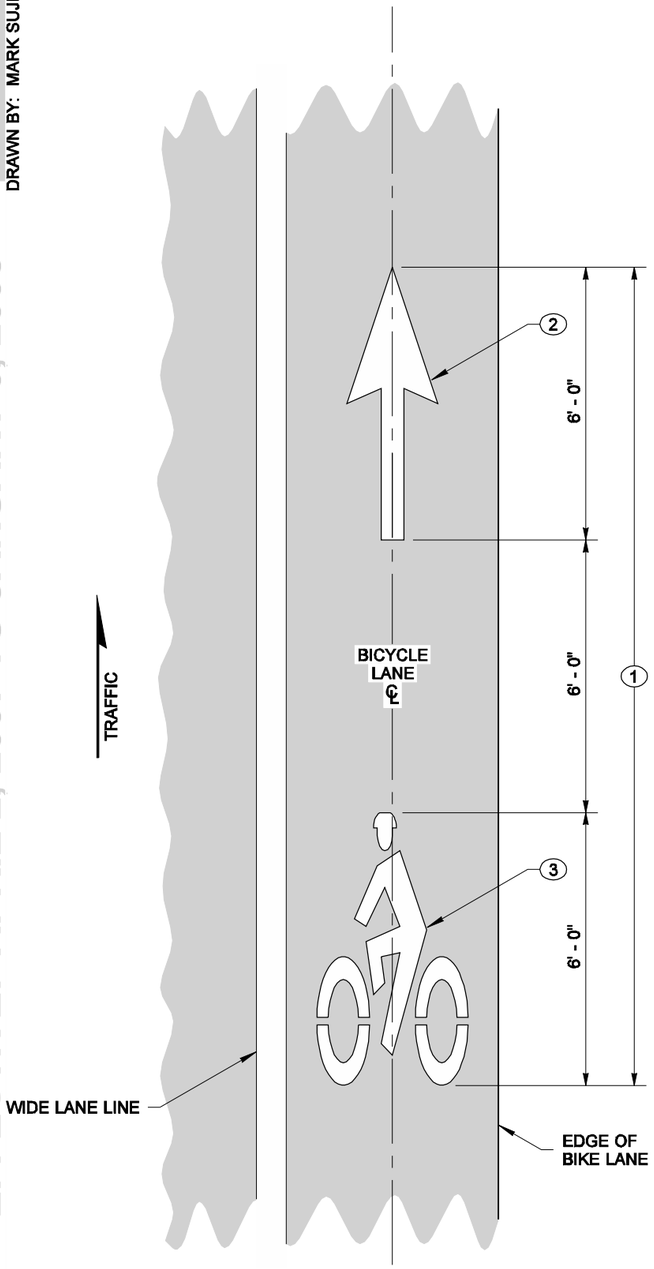

BICYCLE LANE SYMBOL LAYOUT

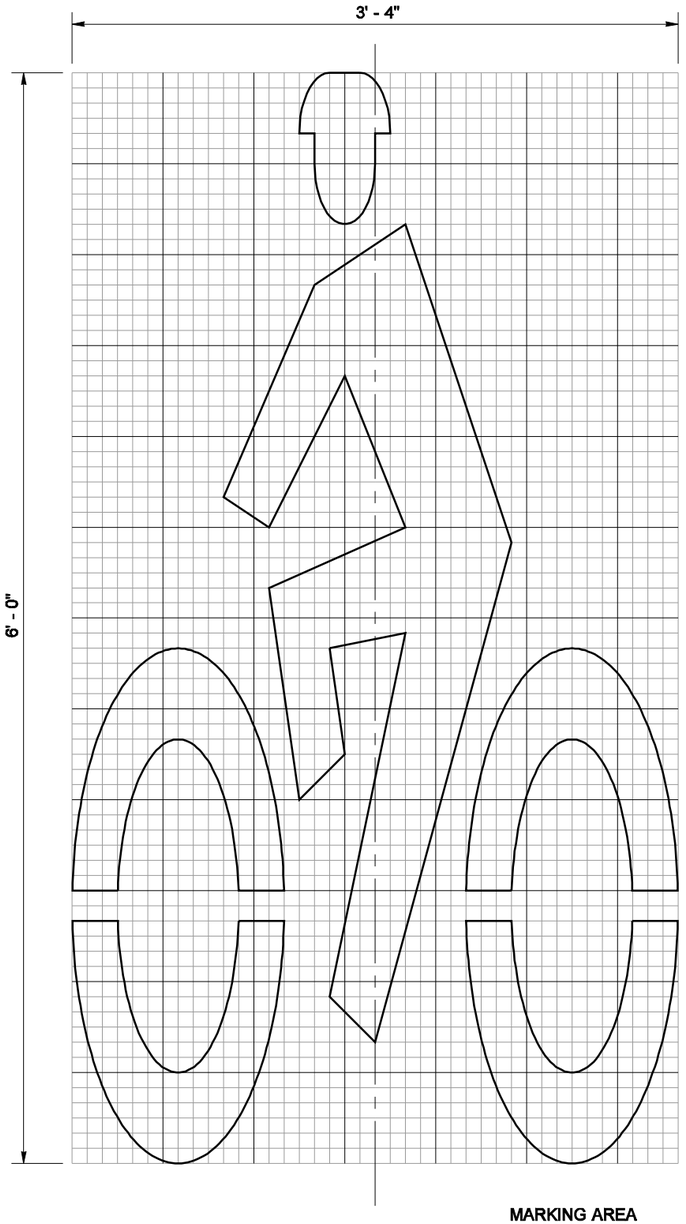

BIKE RIDER SYMBOL DETAIL

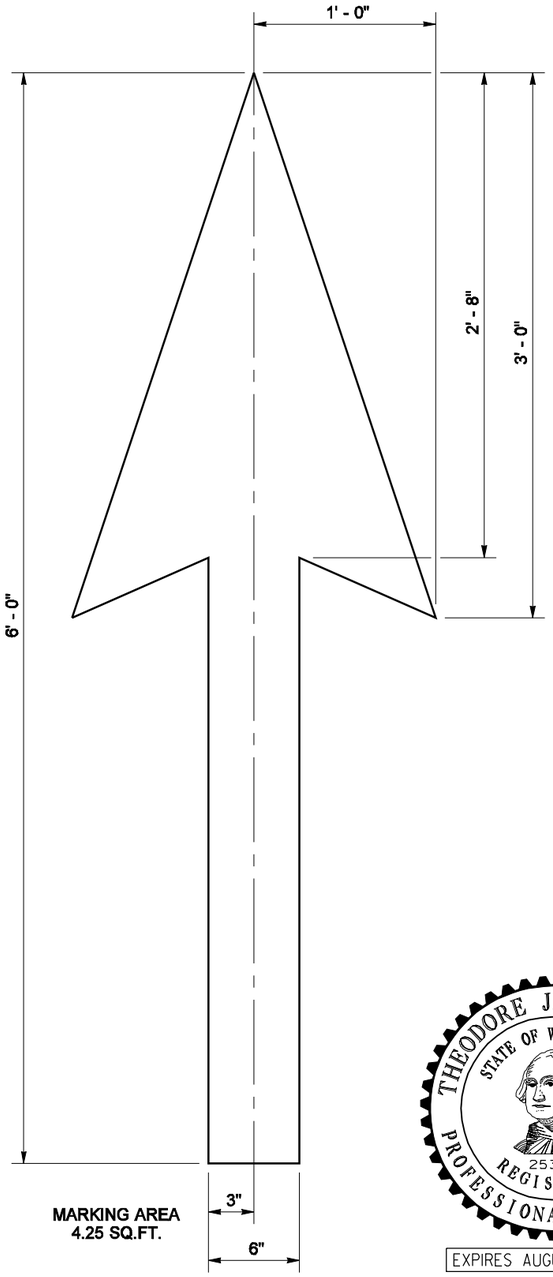

BIKE LANE ARROW DETAIL

KEY NOTES

1. Bid Item "Bicycle Lane Symbol" includes Bike Lane Arrow and Bike Rider Symbol.
2. 2' x 6' White Bike Lane Arrow
3. Bike Rider Symbol

GENERAL NOTE

See contract for location and material requirements.

THEODORE J. TREPANIER
STATE OF WASHINGTON
25335
REGISTERED
PROFESSIONAL ENGINEER
EXPIRES AUGUST 9, 2007

NOTE: THIS PLAN IS NOT A LEGAL ENGINEERING DOCUMENT BUT AN ELECTRONIC DUPLICATE. THE ORIGINAL, SIGNED BY THE ENGINEER AND APPROVED FOR PUBLICATION, IS KEPT ON FILE AT THE WASHINGTON STATE DEPARTMENT OF TRANSPORTATION. A COPY MAY BE OBTAINED UPON REQUEST.

BICYCLE LANE SYMBOL LAYOUT

STANDARD PLAN M-9.50-01

SHEET 1 OF 1 SHEET

APPROVED FOR PUBLICATION

Ken L. Smith — STATE DESIGN ENGINEER
01-30-07 — DATE

Washington State Department of Transportation

EFFECTIVE: APRIL 2, 2007 TO JANUARY 6, 2008

EFFECTIVE: APRIL 2, 2007 TO JANUARY 6, 2008

DRAWN BY: MARK SUJKA

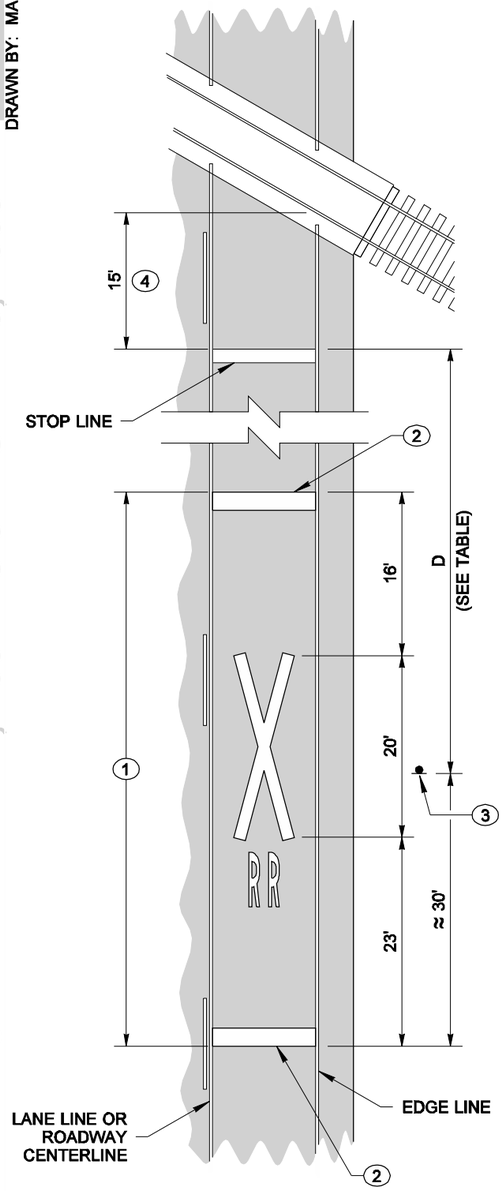

LAYOUT

① TOTAL MARKING AREA
(PER 12' WIDE LANE)
= 109.75 SQ.FT.

STANDARD SYMBOL

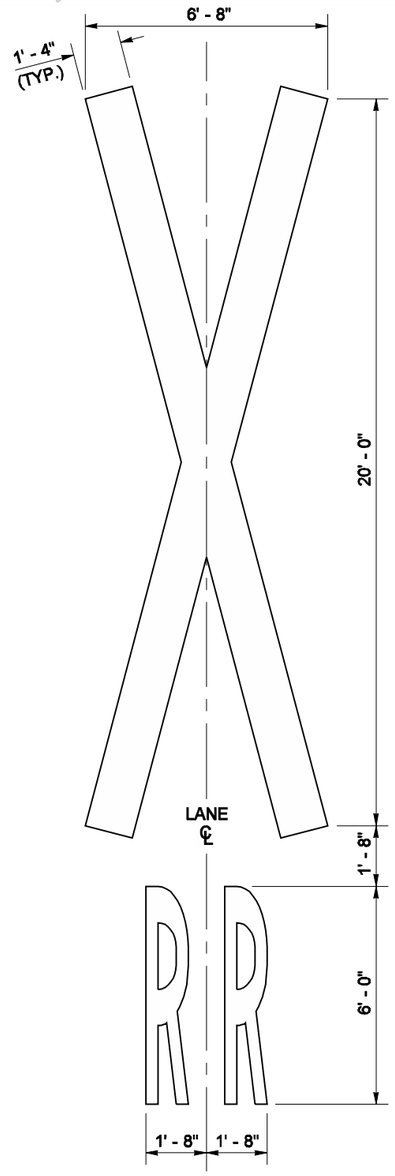

SYMBOL DETAIL

GENERAL NOTE

See contract for location and material requirements.

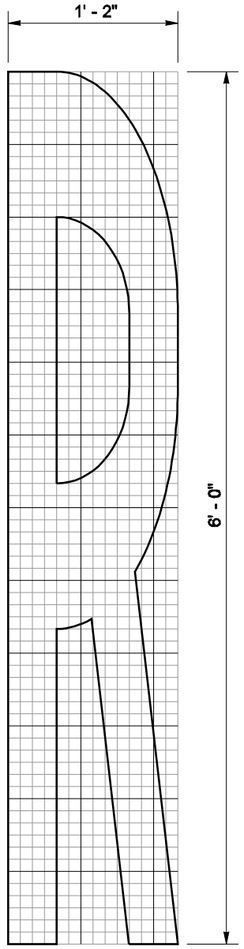

GRID IS 1" SQUARE

"R" DETAIL

MPH	D*
25	50 Ft.
30	100 Ft.
35	150 Ft.
40	225 Ft.
45	300 Ft.
50	375 Ft.
55	450 Ft.
60	550 Ft.
65	650 Ft.

* DIMENSIONS SHOWN ARE APPROXIMATE. SEE CONTRACT.

KEY NOTES

① Bid Item "Railroad Crossing Symbol" includes "X" symbol, letters, and two 24" white transverse lines.

② 24" white transverse line

③ W10-1 Advance Warning Sign (not included in RR Crossing Symbol Bid Item)

④ Place Stop Line 15' from the nearest rail or approximately 8 feet from RR gate, if present.

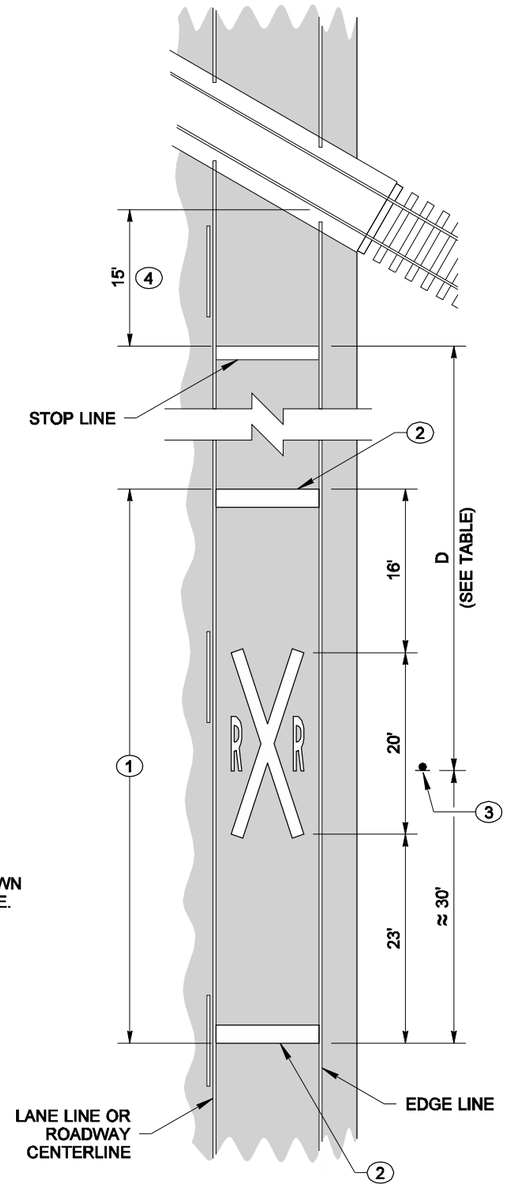

LAYOUT

① TOTAL MARKING AREA
(PER 12' WIDE LANE)
= 111.59 SQ.FT.

ALTERNATIVE SYMBOL

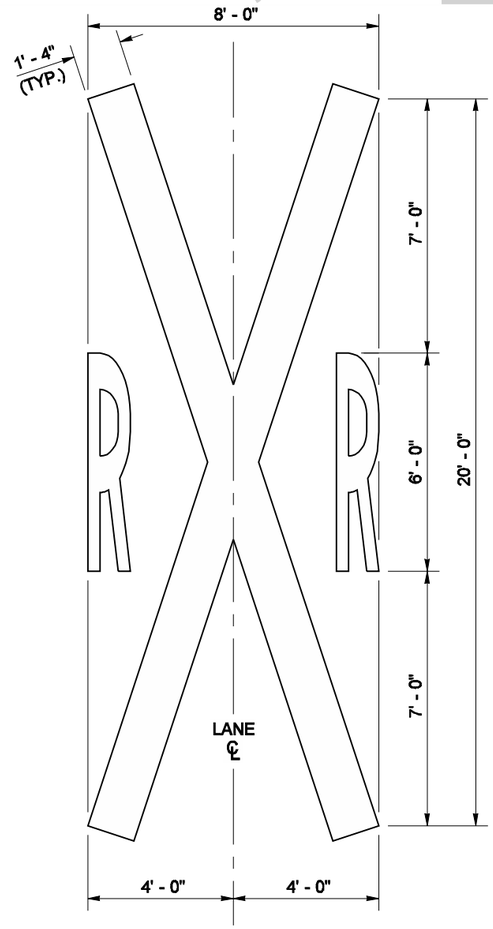

SYMBOL DETAIL

THEODORE J. TREPANIER
STATE OF WASHINGTON
25335
REGISTERED
PROFESSIONAL ENGINEER

EXPIRES AUGUST 9, 2007

NOTE: THIS PLAN IS NOT A LEGAL ENGINEERING DOCUMENT BUT AN ELECTRONIC DUPLICATE. THE ORIGINAL, SIGNED BY THE ENGINEER AND APPROVED FOR PUBLICATION, IS KEPT ON FILE AT THE WASHINGTON STATE DEPARTMENT OF TRANSPORTATION. A COPY MAY BE OBTAINED UPON REQUEST.

RAILROAD CROSSING LAYOUT

STANDARD PLAN M-11.10-01

SHEET 1 OF 1 SHEET

APPROVED FOR PUBLICATION

Ken L. Smith — STATE DESIGN ENGINEER

01-30-07 — DATE

Washington State Department of Transportation

EFFECTIVE: APRIL 2, 2007 TO JANUARY 6, 2008

EFFECTIVE: APRIL 2, 2007 TO JANUARY 6, 2008

DRAWN BY: FERN LIDDELL

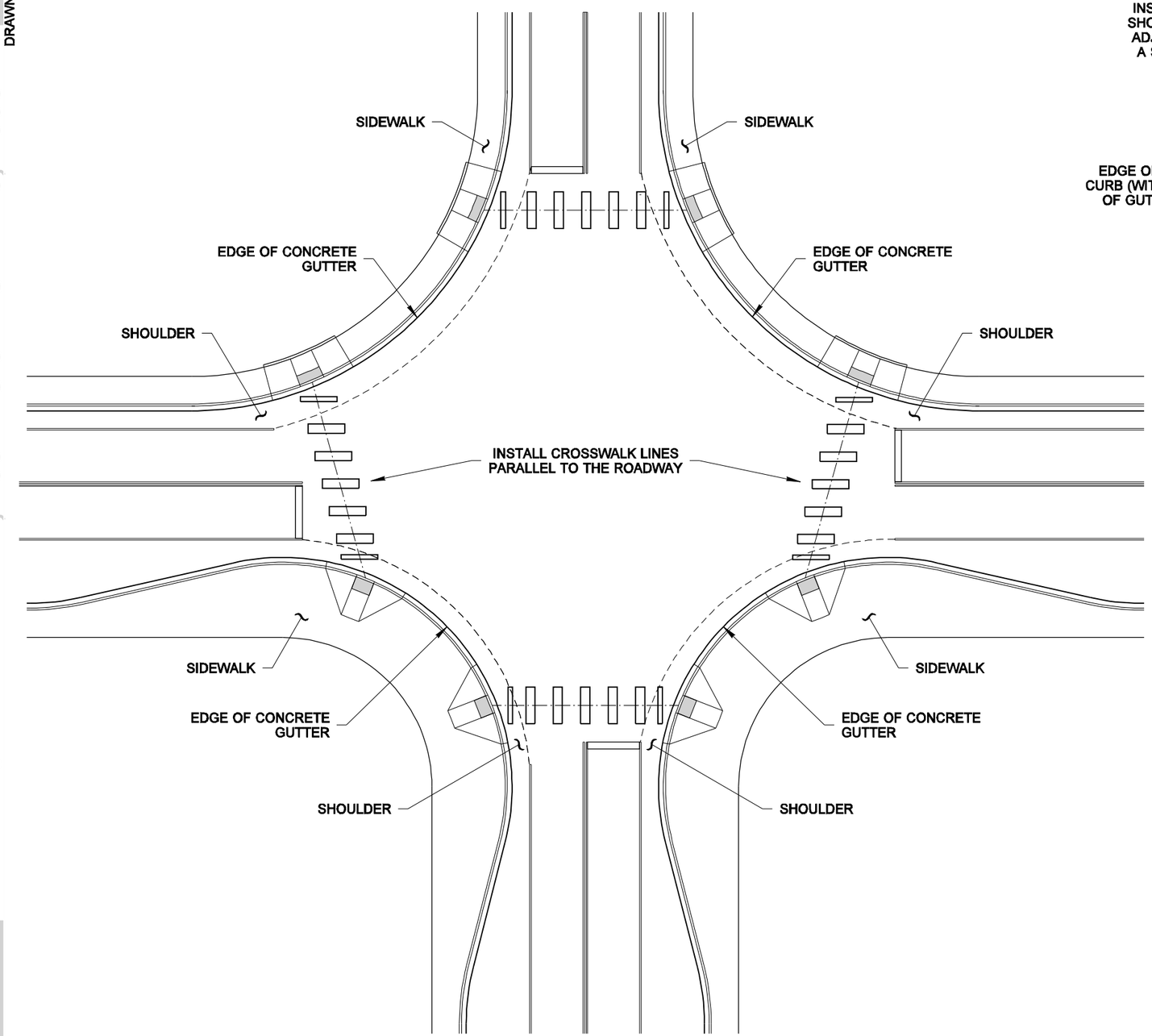

TYPICAL APPLICATIONS

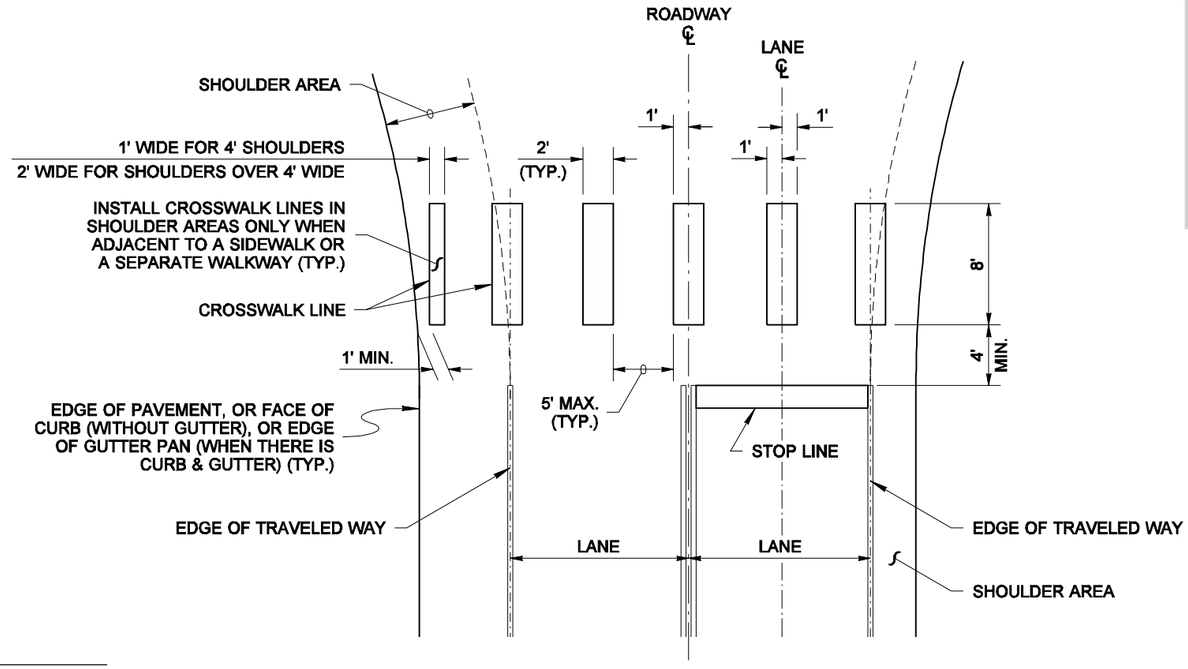

DETAIL

NOTES

1. See the Contract Plans for locations of crosswalk centerlines.
2. To the maximum extent possible, curb ramp centerline should be perpendicular to the crosswalk centerline.
3. To the maximum extent possible, crosswalks should be perpendicular to the centerline of the traveled way.

THEODORE J. TREPANIER
STATE OF WASHINGTON
25335
REGISTERED
PROFESSIONAL ENGINEER

EXPIRES AUGUST 9, 2007

NOTE: THIS PLAN IS NOT A LEGAL ENGINEERING DOCUMENT BUT AN ELECTRONIC DUPLICATE. THE ORIGINAL, SIGNED BY THE ENGINEER AND APPROVED FOR PUBLICATION, IS KEPT ON FILE AT THE WASHINGTON STATE DEPARTMENT OF TRANSPORTATION. A COPY MAY BE OBTAINED UPON REQUEST.

CROSSWALK LAYOUT

STANDARD PLAN M-15.10-01

SHEET 1 OF 1 SHEET

APPROVED FOR PUBLICATION

Ken L. Smith — STATE DESIGN ENGINEER — *02-06-07* — DATE

Washington State Department of Transportation

EFFECTIVE: APRIL 2, 2007 TO JANUARY 6, 2008

EFFECTIVE: APRIL 2, 2007 TO JANUARY 6, 2008

DRAWN BY: MARK SUJKA

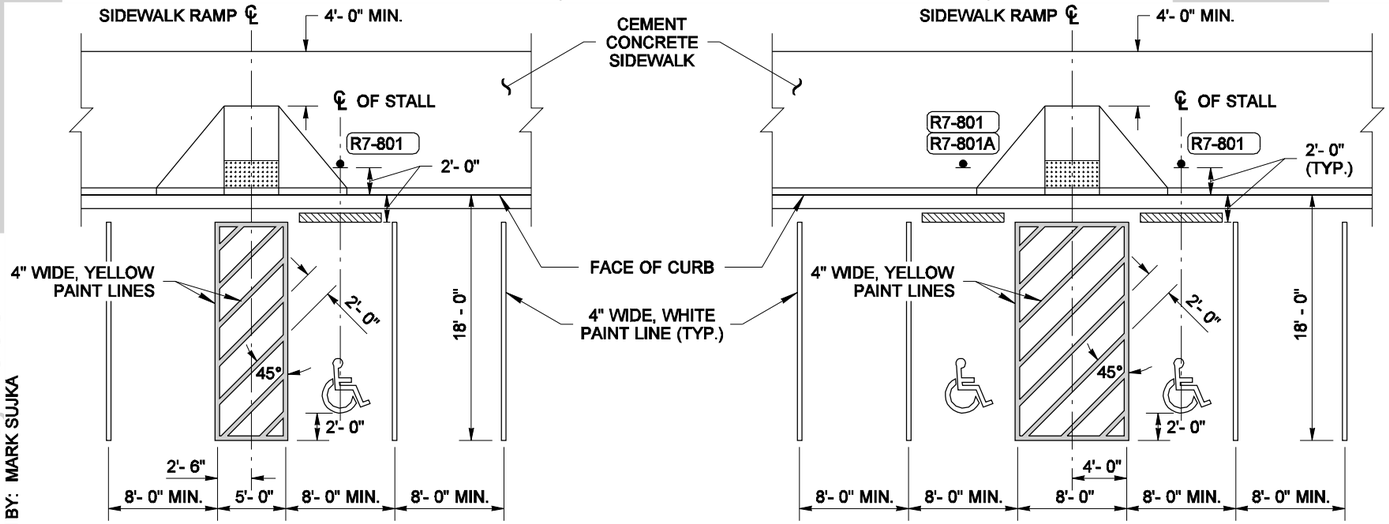

PLAN

ONE ACCESSIBLE STALL

90° PARKING STALL ARRANGEMENT

PLAN

TWO ACCESSIBLE STALLS

90° PARKING STALL ARRANGEMENT

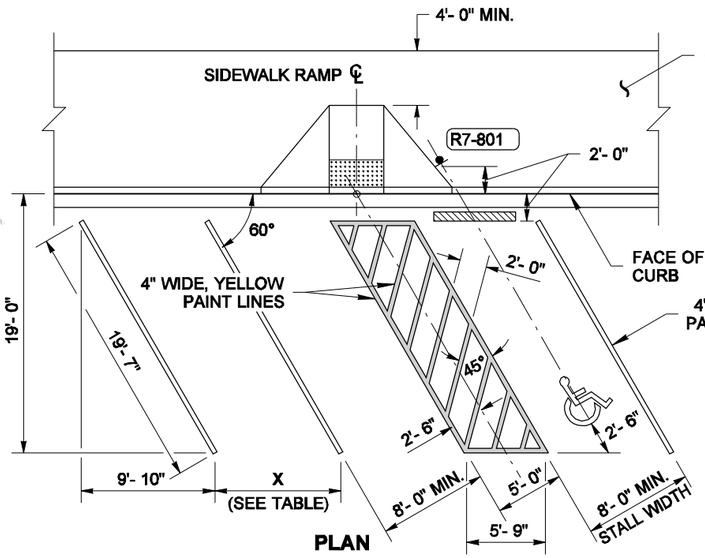

PLAN

ONE ACCESSIBLE STALL

60° PARKING STALL ARRANGEMENT

STALL WIDTH	X
8'- 0"	9'- 3"
9'- 0"	10'- 5"
10'- 0"	11'- 7"
11'- 0"	12'- 8"
12'- 0"	13'- 10"

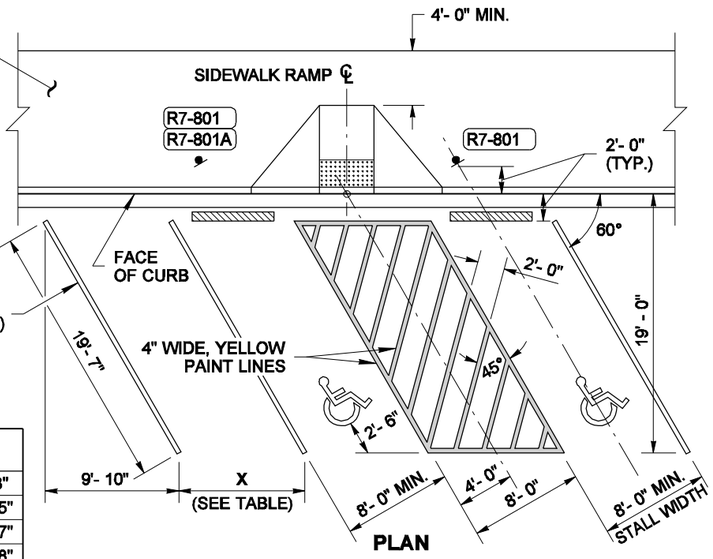

PLAN

TWO ACCESSIBLE STALLS

60° PARKING STALL ARRANGEMENT

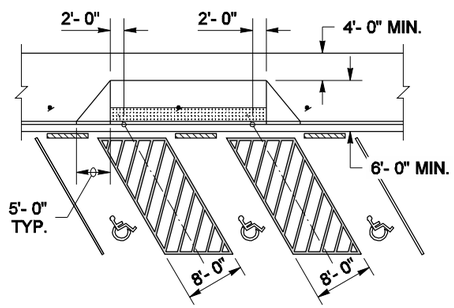

THREE ACCESSIBLE STALLS

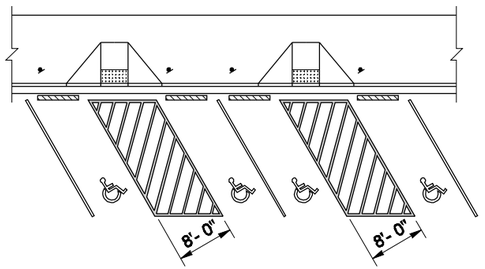

FOUR ACCESSIBLE STALLS

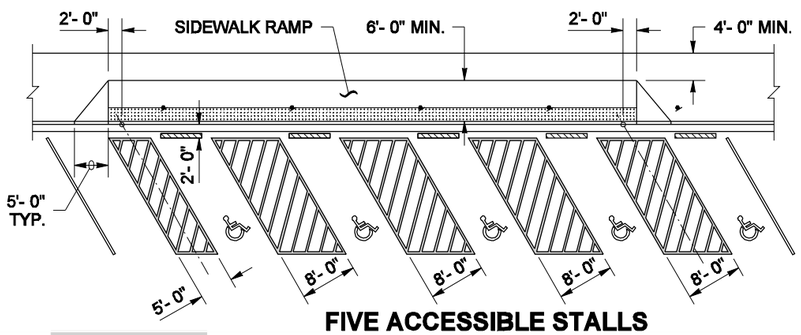

FIVE ACCESSIBLE STALLS

EFFECTIVE: APRIL 2, 2007 TO JANUARY 6, 2008

EFFECTIVE: APRIL 2, 2007 TO JANUARY 6, 2008

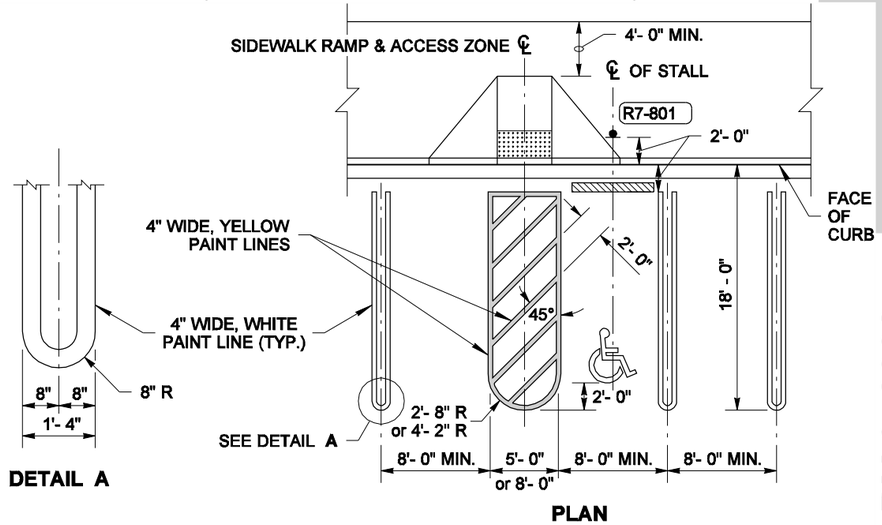

DETAIL A

PLAN

ALTERNATIVE PARKING STALL MARKINGS

USE ONLY WHEN SPECIFIED IN THE CONTRACT

NOTES

1. Three, four and five accessible stall arrangements may be either 60° (angled) or 90° (perpendicular) parking arrangements. See Contract.
2. An Access Parking Space Symbol is required for each accessible parking stall. A blue background and white border are required when the symbol is installed on a cement concrete surface.
3. All accessible stalls shall have wheel stops. Place wheel stops in other stalls when specified in the contract. Wheel stops shall be approximately 6" high and a minimum of 6' long.
4. Refer to the Standard Plans for sidewalk ramp, detectable warning pattern, and curb details.

LEGEND

- R7-801 — Reserved Parking Sign and post with R7-801A Plaque, if indicated (See Sign Fabrication Manual)
- Access Parking Space Symbol
- Manufactured wheel stop
- Detectable Warning Pattern

THEODORE J. TREPANIER — STATE OF WASHINGTON — 25335 — REGISTERED PROFESSIONAL ENGINEER

EXPIRES AUGUST 9, 2007

NOTE: THIS PLAN IS NOT A LEGAL ENGINEERING DOCUMENT BUT AN ELECTRONIC DUPLICATE. THE ORIGINAL, SIGNED BY THE ENGINEER AND APPROVED FOR PUBLICATION, IS KEPT ON FILE AT THE WASHINGTON STATE DEPARTMENT OF TRANSPORTATION. A COPY MAY BE OBTAINED UPON REQUEST.

PARKING SPACE LAYOUTS

STANDARD PLAN M-17.10-01

SHEET 1 OF 1 SHEET

APPROVED FOR PUBLICATION

Ken L. Smith — STATE DESIGN ENGINEER — *01-30-07* — DATE

Washington State Department of Transportation

EFFECTIVE: APRIL 2, 2007 TO JANUARY 6, 2008

EFFECTIVE: APRIL 2, 2007 TO JANUARY 6, 2008

DRAWN BY: MARK SUJKA



CENTER LINE & LANE LINE



NO-PASS LINE & TWO-WAY LEFT TURN CENTER LINE

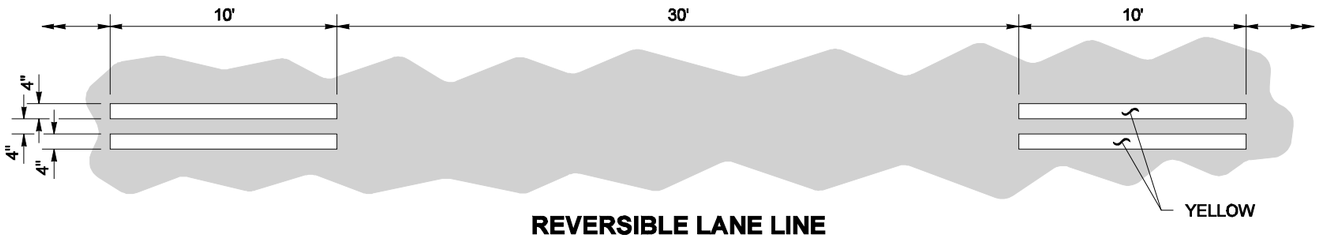

REVERSIBLE LANE LINE

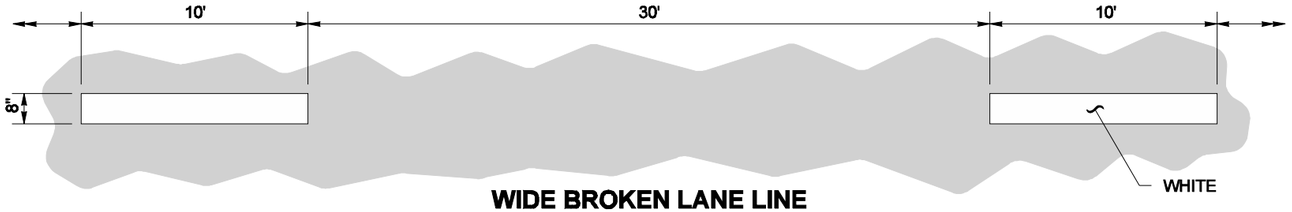

WIDE BROKEN LANE LINE

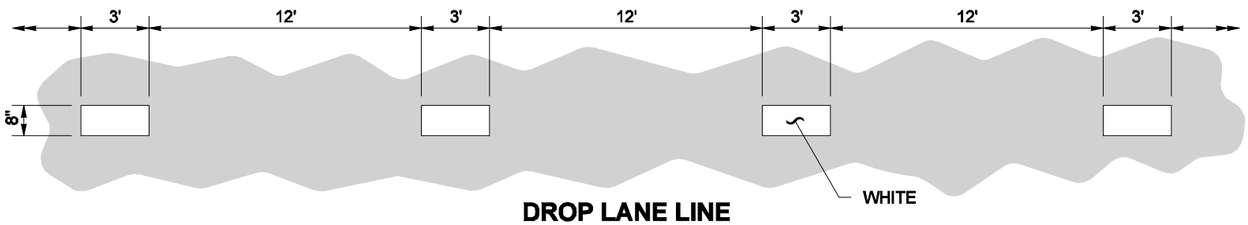

DROP LANE LINE

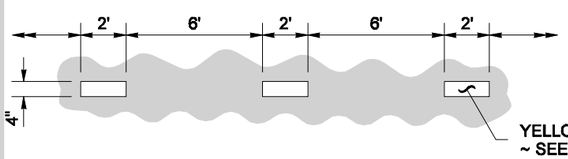

DOTTED EXTENSION LINE

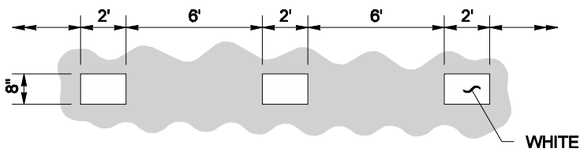

WIDE DOTTED LANE LINE

EFFECTIVE: APRIL 2, 2007 TO JANUARY 6, 2008

EFFECTIVE: APRIL 2, 2007 TO JANUARY 6, 2008

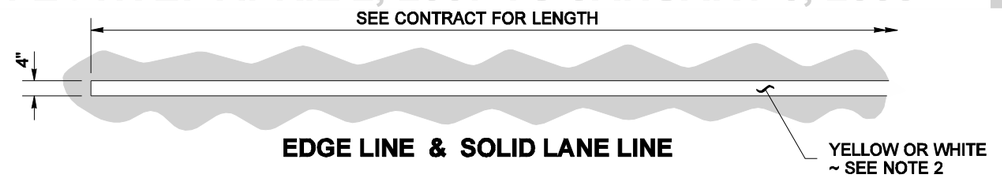

EDGE LINE & SOLID LANE LINE

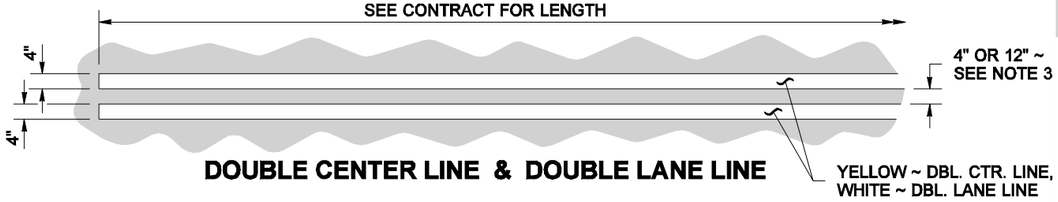

DOUBLE CENTER LINE & DOUBLE LANE LINE

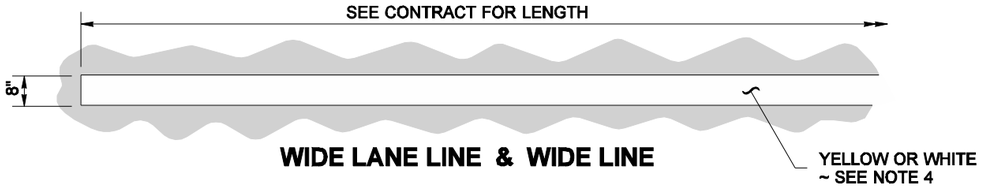

WIDE LANE LINE & WIDE LINE

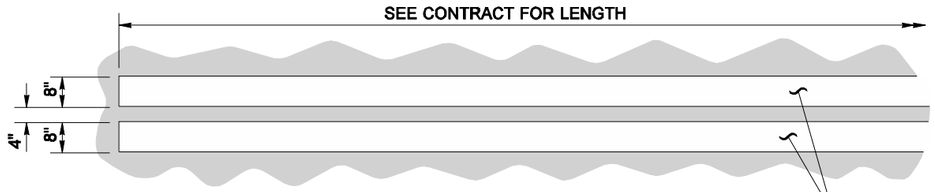

DOUBLE WIDE LANE LINE

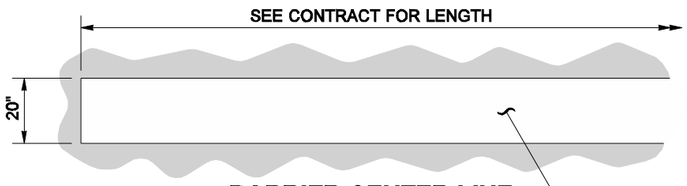

BARRIER CENTER LINE

NOTES

1. Dotted Extension Line shall be the same color as the line it is extending.

2. Edge Line shall be white on the right edge of traveled way, and yellow on the left edge of traveled way (on one-way roadways). Solid Lane Line shall be white.

3. The distance between the lines of the Double Center Line shall be 12" everywhere, except 4" for left turn channelization and narrow roadways with lane widths of 10 feet or less. Local Agencies (on non-State Routes) may specify a 4" distance for all locations.

   The distance between the lines of the Double Lane Line shall be 4".

4. Wide Lane Line shall be white.

   Wide Line shall be yellow or white as specified in the Plans.

THEODORE J. TREPANIER
STATE OF WASHINGTON
25335
REGISTERED
PROFESSIONAL ENGINEER

EXPIRES AUGUST 9, 2007

NOTE: THIS PLAN IS NOT A LEGAL ENGINEERING DOCUMENT BUT AN ELECTRONIC DUPLICATE. THE ORIGINAL, SIGNED BY THE ENGINEER AND APPROVED FOR PUBLICATION, IS KEPT ON FILE AT THE WASHINGTON STATE DEPARTMENT OF TRANSPORTATION. A COPY MAY BE OBTAINED UPON REQUEST.

LONGITUDINAL MARKING PATTERNS

STANDARD PLAN M-20.10-01

SHEET 1 OF 1 SHEET

APPROVED FOR PUBLICATION

Ken L. Smith — STATE DESIGN ENGINEER

01-30-07 — DATE

Washington State Department of Transportation

EFFECTIVE: APRIL 2, 2007 TO JANUARY 6, 2008

EFFECTIVE: APRIL 2, 2007 TO JANUARY 6, 2008

EFFECTIVE: APRIL 2, 2007 TO JANUARY 6, 2008

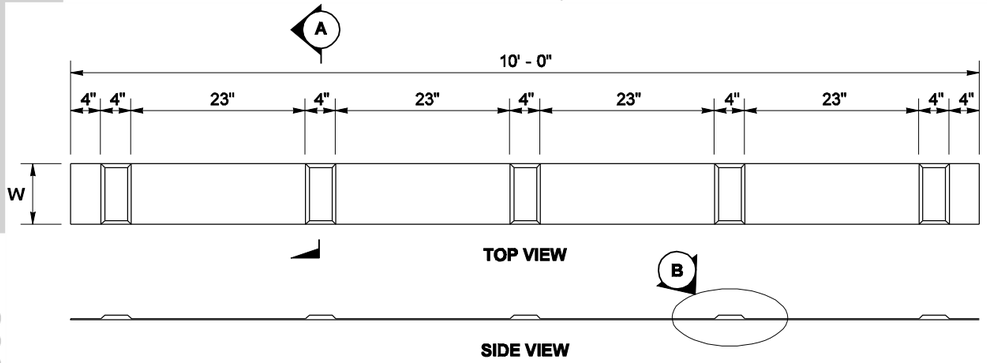

PROFILED PLASTIC
(BROKEN LINE)

FOR:
CENTER LINE & LANE LINE ~ W = 4"
NO-PASS LINE & TWO-WAY LEFT-TURN CENTER LINE ~ W = 4"
REVERSIBLE LANE LINE ~ W = 4"
WIDE BROKEN LANE LINE ~ W = 8"

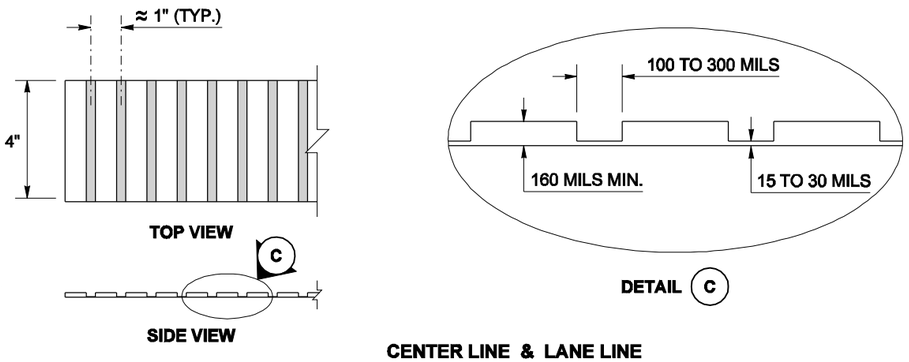

EMBOSSED PLASTIC
(SOLID OR BROKEN LINE)

FOR:
CENTER LINE & LANE LINE
NO-PASS LINE & TWO-WAY LEFT-TURN CENTER LINE
REVERSIBLE LANE LINE
DOUBLE CENTER LINE & DOUBLE LANE LINE
EDGE LINE & SOLID LANE LINE

GENERAL NOTE

See Standard Plan M-20.10 for pattern and color requirements.

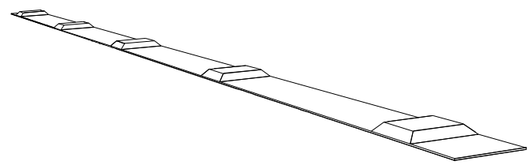

PERSPECTIVE VIEW

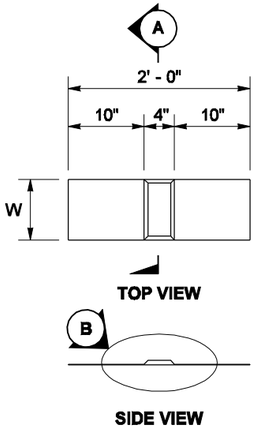

DOTTED EXTENSION LINE ~ W = 4"
WIDE DOTTED LANE LINE ~ W = 8"

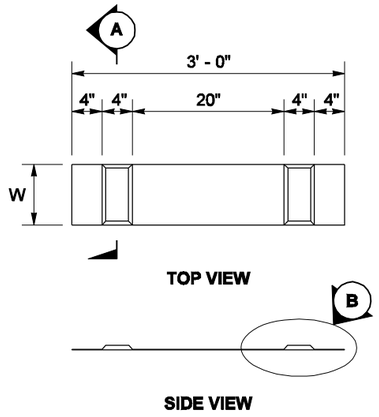

DROP LANE LINE ~ W = 8"

PROFILED PLASTIC
(BROKEN LINE)

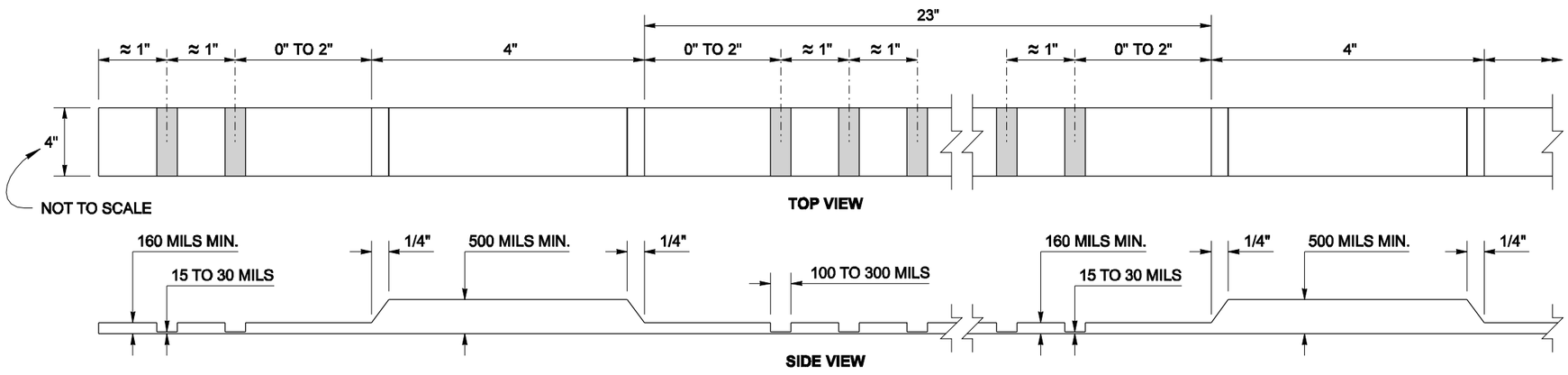

PROFILED EMBOSSED PLASTIC
(SOLID OR BROKEN LINE)

FOR:
CENTER LINE & LANE LINE
NO-PASS LINE
TWO-WAY LEFT-TURN CENTER LINE
REVERSIBLE LANE LINE
DOUBLE CENTER LINE & DOUBLE LANE LINE
EDGE LINE & SOLID LANE LINE

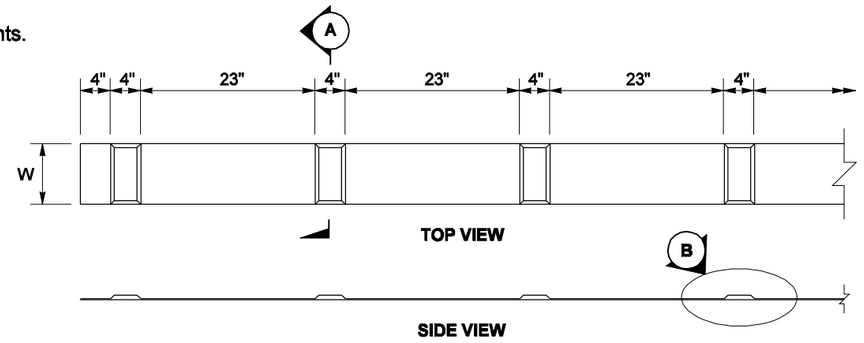

PROFILED PLASTIC
(SOLID LINE)

FOR:
NO-PASS LINE ~ W = 4"
TWO-WAY LEFT-TURN CENTER LINE ~ W = 4"
DOUBLE CENTER LINE & DOUBLE LANE LINE ~ W = 4"
EDGE LINE & SOLID LANE LINE ~ W = 4"
WIDE LANE LINE & WIDE LINE ~ W = 8"
DOUBLE WIDE LANE LINE ~ W = 8"
BARRIER CENTER LINE ~ W = 20"

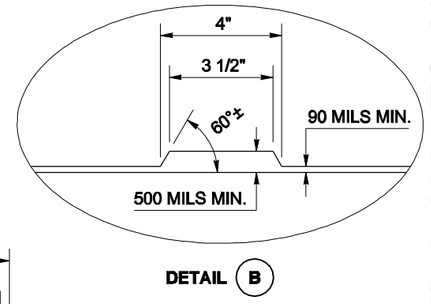

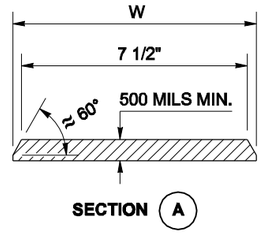

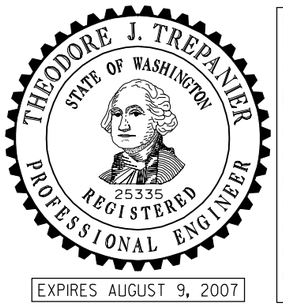

NOTE: THIS PLAN IS NOT A LEGAL ENGINEERING DOCUMENT BUT AN ELECTRONIC DUPLICATE. THE ORIGINAL, SIGNED BY THE ENGINEER AND APPROVED FOR PUBLICATION, IS KEPT ON FILE AT THE WASHINGTON STATE DEPARTMENT OF TRANSPORTATION. A COPY MAY BE OBTAINED UPON REQUEST.

PROFILED AND EMBOSSED PLASTIC LINES

STANDARD PLAN M-20.20-01

SHEET 1 OF 1 SHEET

APPROVED FOR PUBLICATION

Ken L. Smith — STATE DESIGN ENGINEER — *01-30-07* — DATE

Washington State Department of Transportation

DRAWN BY: MARK SUJKA

EFFECTIVE: APRIL 2, 2007 TO JANUARY 6, 2008

EFFECTIVE: APRIL 2, 2007 TO JANUARY 6, 2008

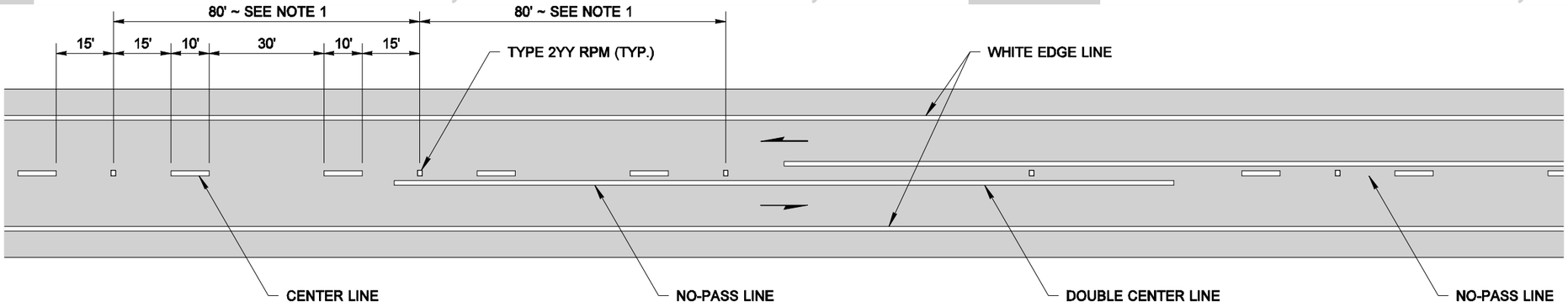

TWO LANE TWO-WAY TRAFFIC

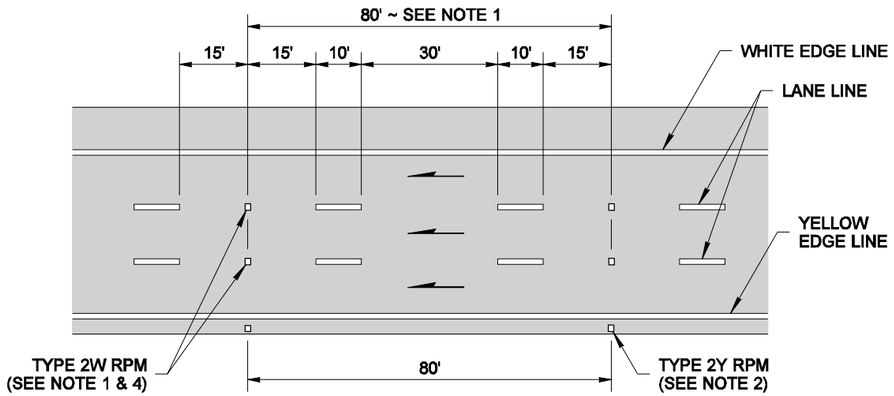

MULTILANE ONE-WAY TRAFFIC

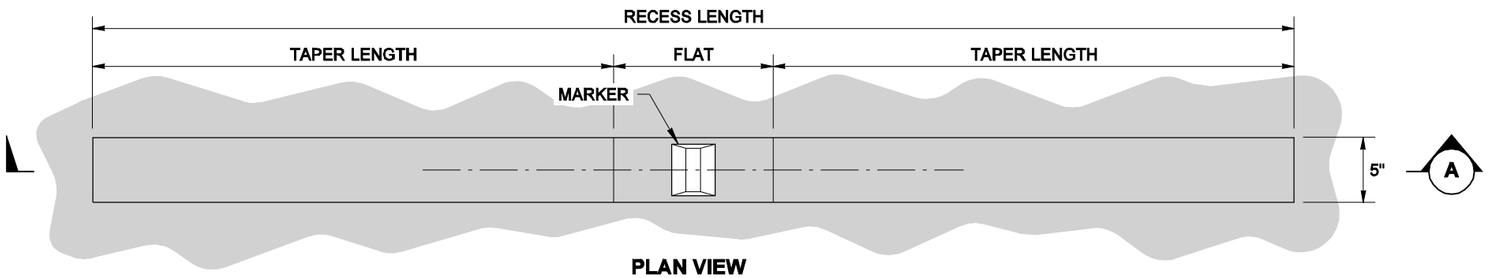

PLAN VIEW

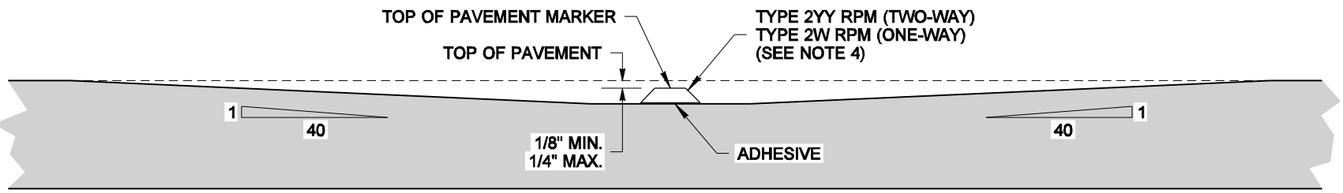

SECTION (A)

RECESSED PAVEMENT MARKER DETAILS

FOR USE WHERE SPECIFIED IN CONTRACT

NOTES

1. Raised Pavement Markers Types 2YY and 2W shall be spaced at 80' intervals on tangents and on horizontal curves with a radius of 5000' or more, and at 40' intervals on horizontal curves having radii of less than 5000'. Center the RPM's in the gaps between the pavement marking lines.
2. Type 2Y RPM's, when specified, shall be placed outside the left Edge Line at 80' intervals. See "LEFT EDGE OF LANE PLACEMENT DETAIL".
3. Recessed pavement markers, when specified, shall be installed at the locations shown for Type 2W RPM's on multilane one-way roadways, and Type 2YY RPM's on two lane two-way roadways.
4. The Type 2W RPM's placed on multilane one-way roadways and all RPM's set in recesses shall have an abrasion resistant coating.

TYPE 2 RPM RAISED FACE COLORS	
TYPE 2YY	YELLOW AND YELLOW
TYPE 2W	WHITE ~ ONE SIDE ONLY
TYPE 2Y	YELLOW ~ ONE SIDE ONLY

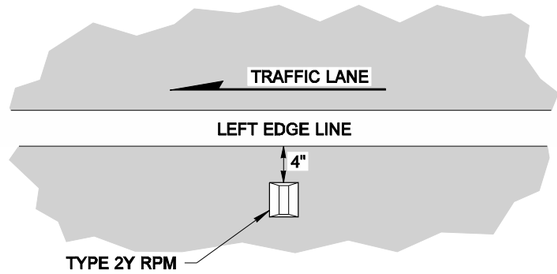

LEFT EDGE OF LANE PLACEMENT DETAIL

SEE NOTE 2

THEODORE J. TREPANIER
STATE OF WASHINGTON
25335
REGISTERED
PROFESSIONAL ENGINEER

EXPIRES AUGUST 9, 2007

NOTE: THIS PLAN IS NOT A LEGAL ENGINEERING DOCUMENT BUT AN ELECTRONIC DUPLICATE. THE ORIGINAL, SIGNED BY THE ENGINEER AND APPROVED FOR PUBLICATION, IS KEPT ON FILE AT THE WASHINGTON STATE DEPARTMENT OF TRANSPORTATION. A COPY MAY BE OBTAINED UPON REQUEST.

LONGITUDINAL MARKING SUPPLEMENT WITH RAISED PAVEMENT MARKERS
STANDARD PLAN M-20.30-01

SHEET 1 OF 1 SHEET

APPROVED FOR PUBLICATION

Ken L. Smith — STATE DESIGN ENGINEER
01-30-07 — DATE

Washington State Department of Transportation

DRAWN BY: MARK SUJKA

EFFECTIVE: APRIL 2, 2007 TO JANUARY 6, 2008

EFFECTIVE: APRIL 2, 2007 TO JANUARY 6, 2008

EFFECTIVE: APRIL 2, 2007 TO JANUARY 6, 2008

DRAWN BY: ADAM COCHRAN

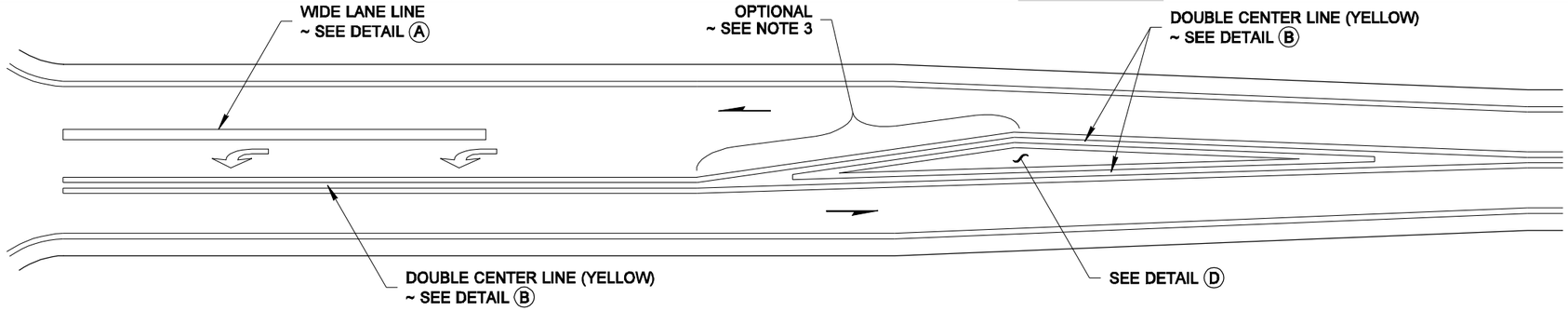

NOTES

1. Raised pavement markers shall be installed only when specified in the Contract Plans.
2. See the Standard Plans for marker designation.
3. The portion labeled "OPTIONAL" is only used when the Optional Marked Deceleration Taper (see Standard Plans M-3.10 and M-3.20) is specified in the contract plans.

LEFT TURN LANE

(SEE NOTE 3)

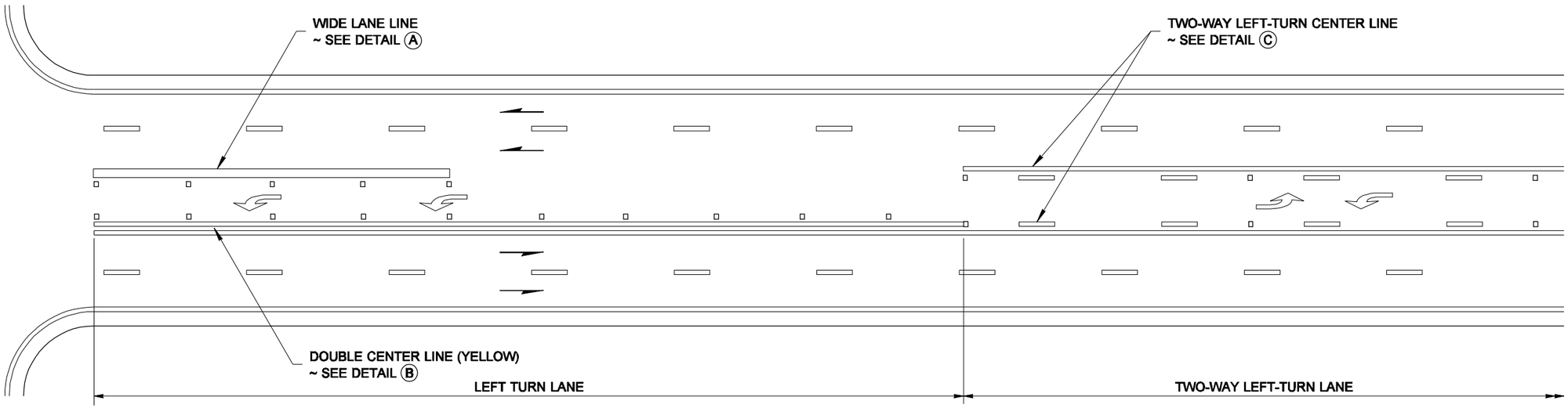

TWO-WAY LEFT-TURN LANE

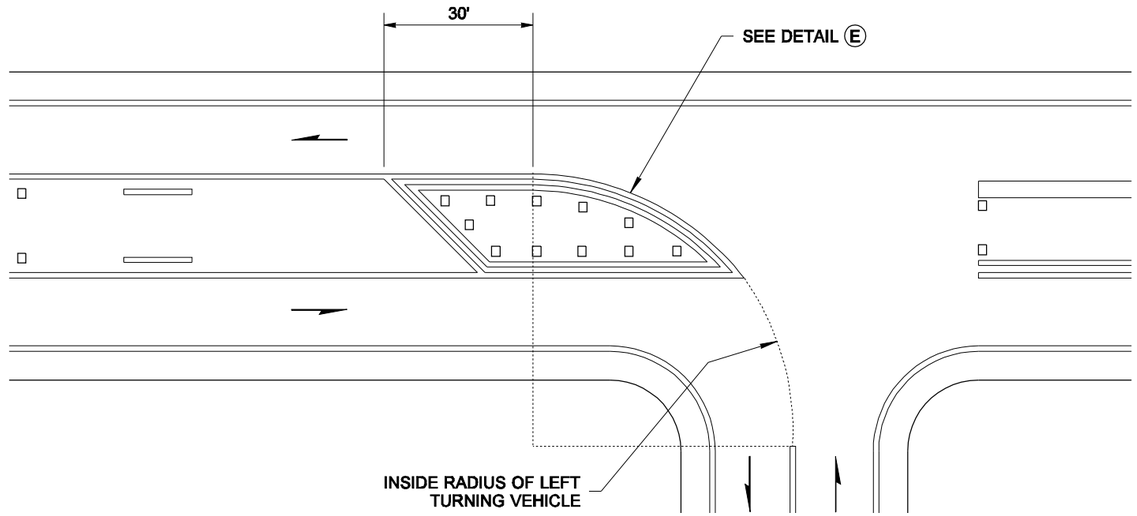

END TWO-WAY LEFT-TURN LANE



EXPIRES AUGUST 9, 2007

NOTE: THIS PLAN IS NOT A LEGAL ENGINEERING DOCUMENT BUT AN ELECTRONIC DUPLICATE. THE ORIGINAL, SIGNED BY THE ENGINEER AND APPROVED FOR PUBLICATION, IS KEPT ON FILE AT THE WASHINGTON STATE DEPARTMENT OF TRANSPORTATION. A COPY MAY BE OBTAINED UPON REQUEST.

LONGITUDINAL MARKING SUPPLEMENT WITH RPM's ~ TURN LANES

STANDARD PLAN M-20.40-01

SHEET 1 OF 2 SHEETS

APPROVED FOR PUBLICATION

Ken L. Smith — STATE DESIGN ENGINEER

01-30-07 — DATE

Washington State Department of Transportation

EFFECTIVE: APRIL 2, 2007 TO JANUARY 6, 2008

EFFECTIVE: APRIL 2, 2007 TO JANUARY 6, 2008

EFFECTIVE: APRIL 2, 2007 TO JANUARY 6, 2008

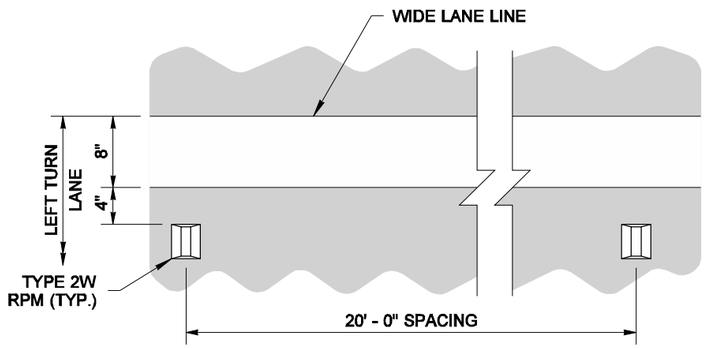

DETAIL (A)

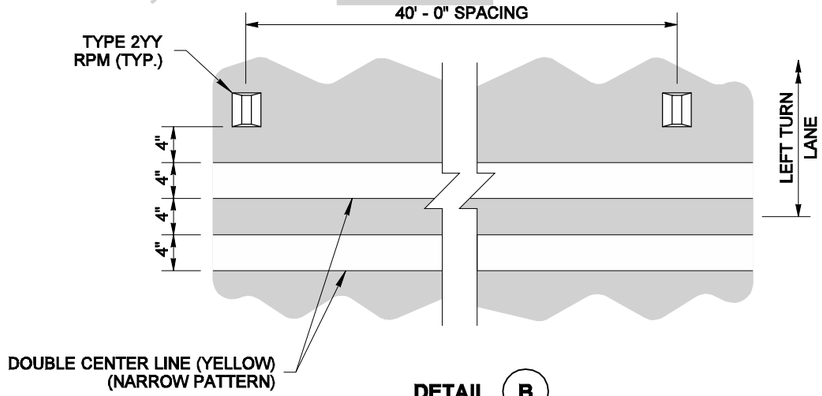

DETAIL (B)

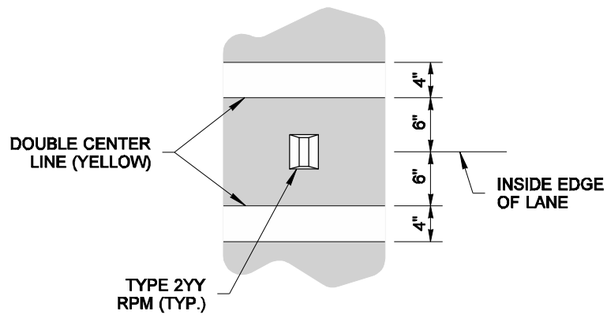

ALTERNATIVE LINE DETAIL

EFFECTIVE: APRIL 2, 2007 TO JANUARY 6, 2008

DRAWN BY: ADAM COCHRAN

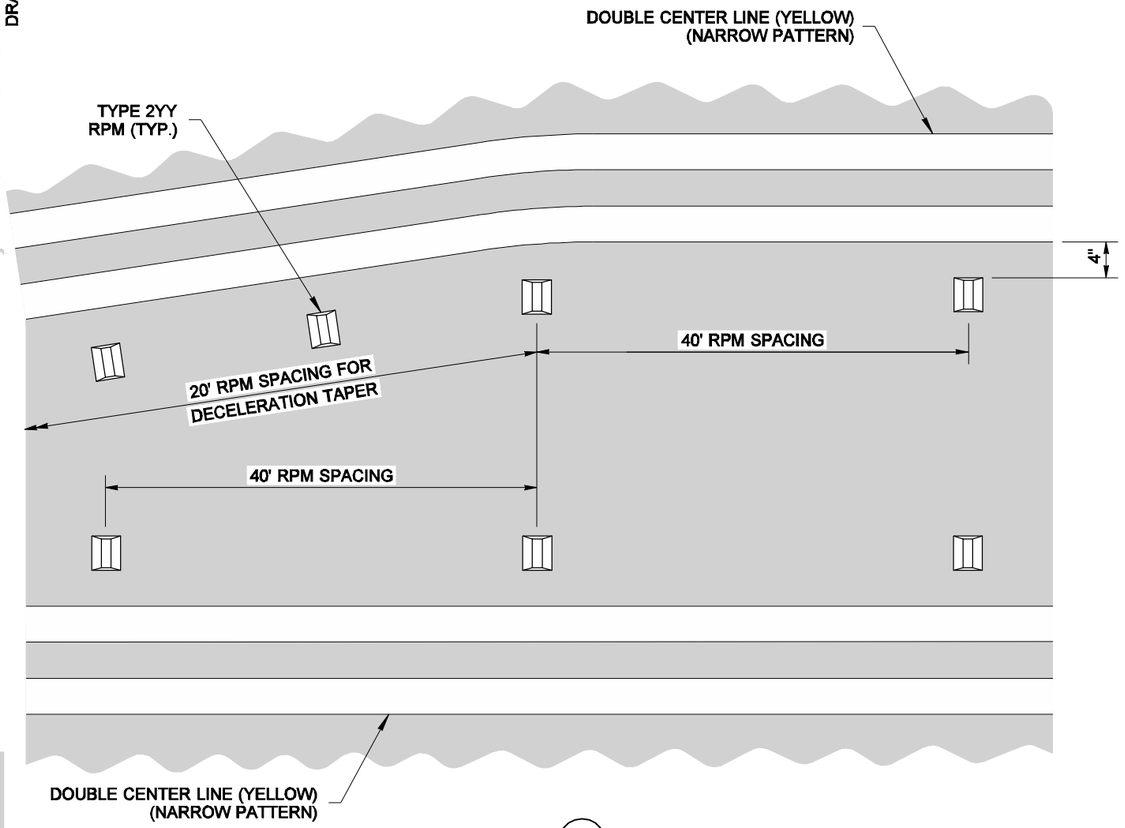

DETAIL (D)

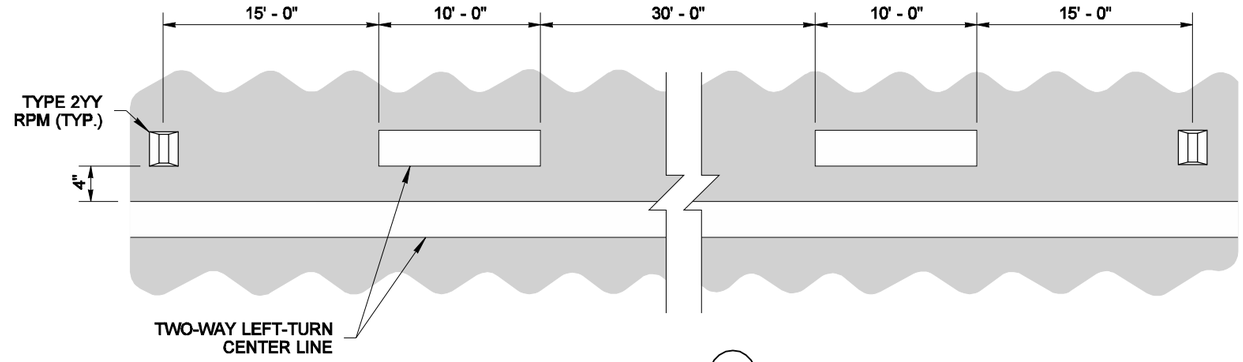

DETAIL (C)

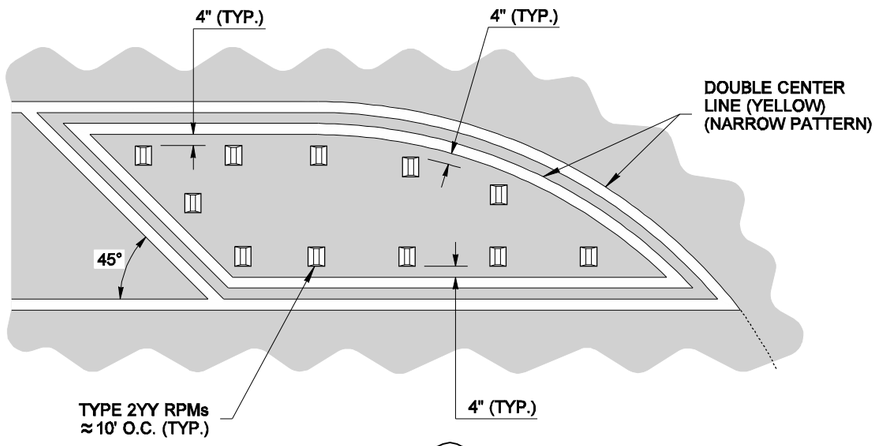

DETAIL (E)

THEODORE J. TREPANIER
STATE OF WASHINGTON
25335
REGISTERED
PROFESSIONAL ENGINEER

EXPIRES AUGUST 9, 2007

NOTE: THIS PLAN IS NOT A LEGAL ENGINEERING DOCUMENT BUT AN ELECTRONIC DUPLICATE. THE ORIGINAL, SIGNED BY THE ENGINEER AND APPROVED FOR PUBLICATION, IS KEPT ON FILE AT THE WASHINGTON STATE DEPARTMENT OF TRANSPORTATION. A COPY MAY BE OBTAINED UPON REQUEST.

LONGITUDINAL MARKING SUPPLEMENT WITH RPM's ~ TURN LANES

STANDARD PLAN M-20.40-01

SHEET 2 OF 2 SHEETS

APPROVED FOR PUBLICATION

Ken L. Smith — STATE DESIGN ENGINEER

01-30-07 — DATE

Washington State Department of Transportation

EFFECTIVE: APRIL 2, 2007 TO JANUARY 6, 2008

EFFECTIVE: APRIL 2, 2007 TO JANUARY 6, 2008

DRAWN BY: MARK SUJKA

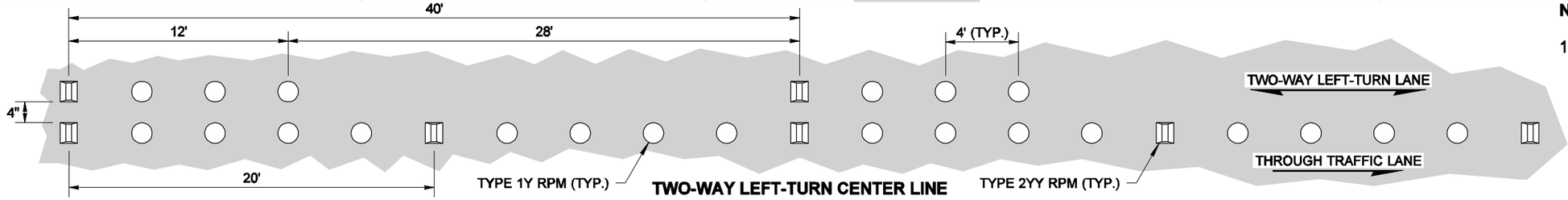

TWO-WAY LEFT-TURN CENTER LINE

NOTE

1. The NO PASS LINE (when required) is applied parallel to the CENTER LINE, 4" away, with the Type 2yy RPM's aligned (similar to TWO-WAY LEFT-TURN LINE).

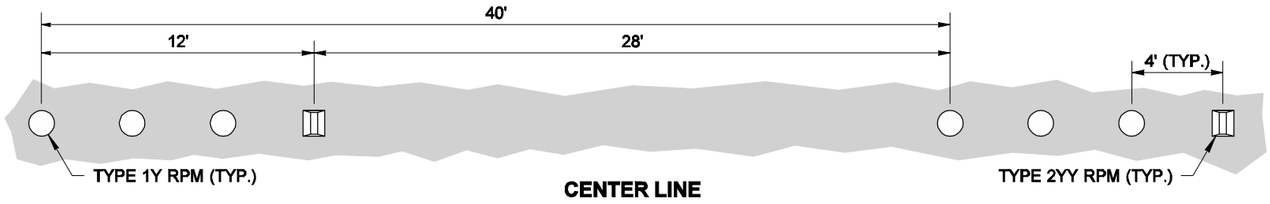

CENTER LINE

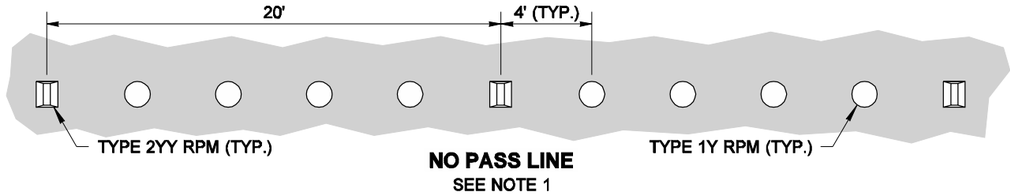

NO PASS LINE
SEE NOTE 1

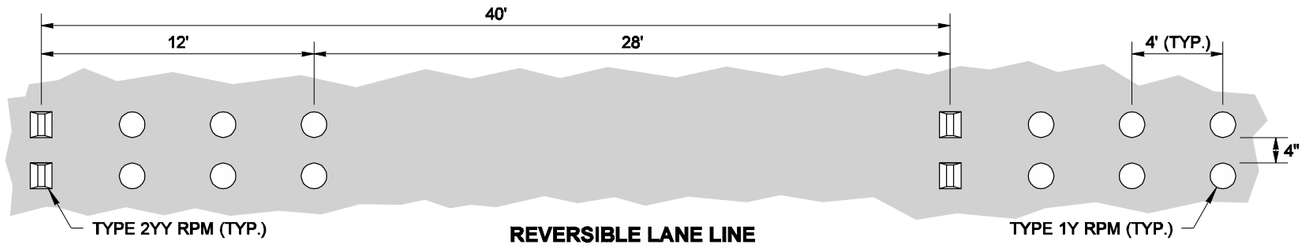

REVERSIBLE LANE LINE

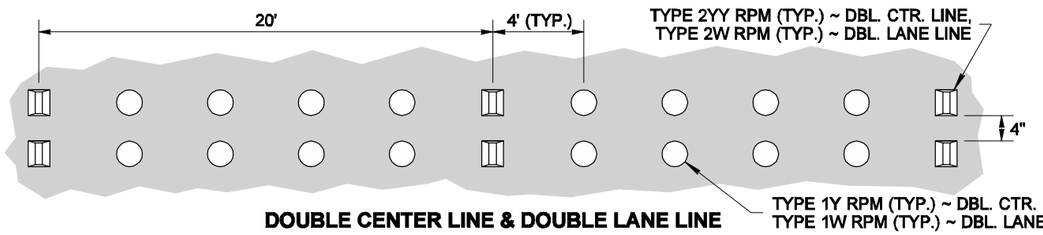

DOUBLE CENTER LINE & DOUBLE LANE LINE

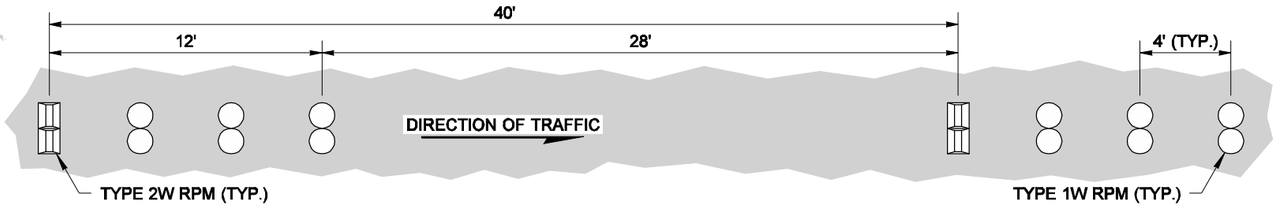

WIDE BROKEN LANE LINE

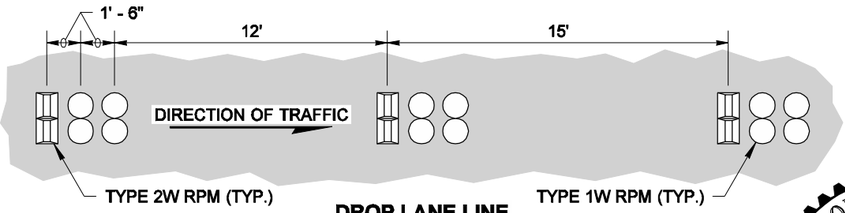

DROP LANE LINE

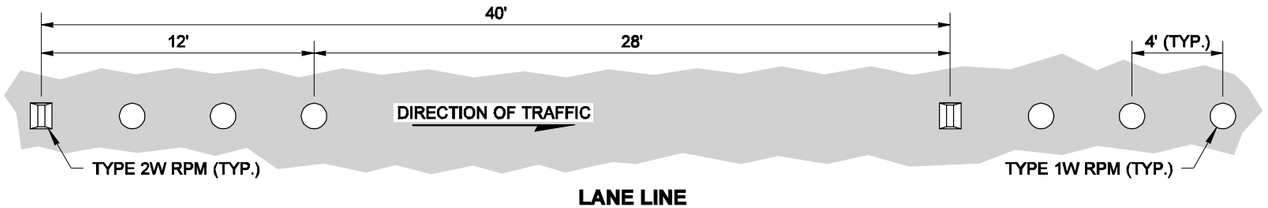

LANE LINE

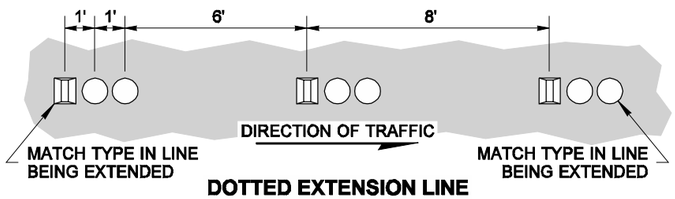

DOTTED EXTENSION LINE

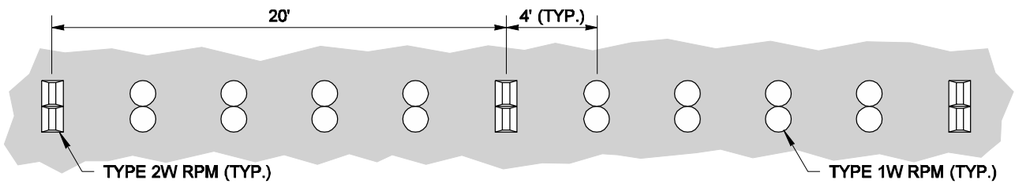

WIDE LANE LINE & WIDE LINE

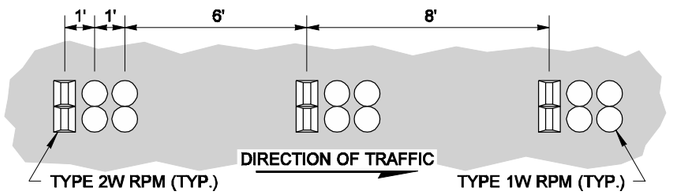

WIDE DOTTED LANE LINE

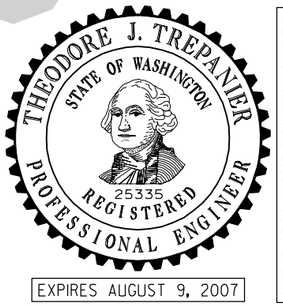

EXPIRES AUGUST 9, 2007

NOTE: THIS PLAN IS NOT A LEGAL ENGINEERING DOCUMENT BUT AN ELECTRONIC DUPLICATE. THE ORIGINAL, SIGNED BY THE ENGINEER AND APPROVED FOR PUBLICATION, IS KEPT ON FILE AT THE WASHINGTON STATE DEPARTMENT OF TRANSPORTATION. A COPY MAY BE OBTAINED UPON REQUEST.

LONGITUDINAL MARKING SUBSTITUTION W/ RAISED PAVEMENT MARKERS

STANDARD PLAN M-20.50-01

SHEET 1 OF 1 SHEET

APPROVED FOR PUBLICATION

Ken L. Smith — STATE DESIGN ENGINEER

01-30-07 — DATE

Washington State Department of Transportation

EFFECTIVE: APRIL 2, 2007 TO JANUARY 6, 2008

EFFECTIVE: APRIL 2, 2007 TO JANUARY 6, 2008

DRAWN BY: MARK SUJKA

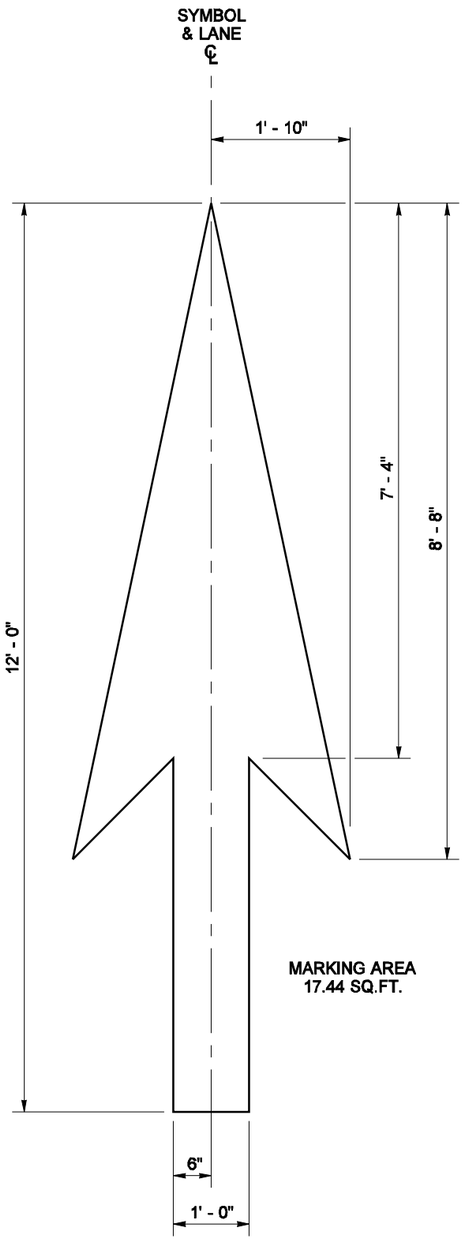

TYPE 1 TRAFFIC ARROW

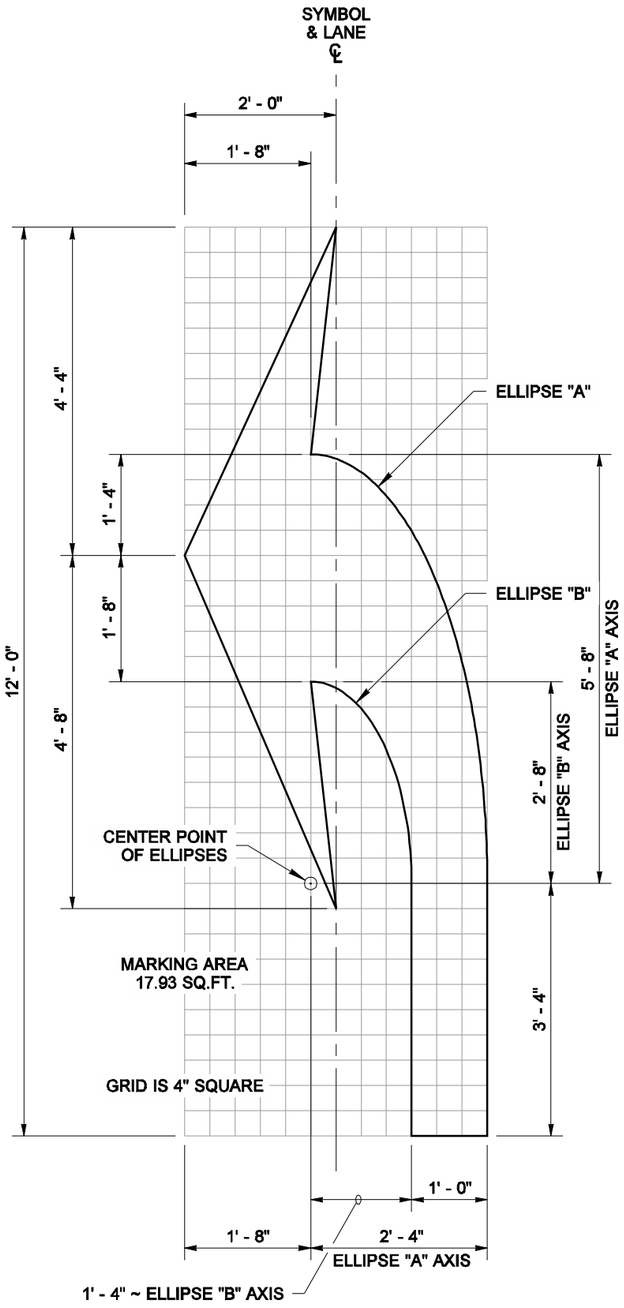

TYPE 2L (LEFT)
TRAFFIC ARROW

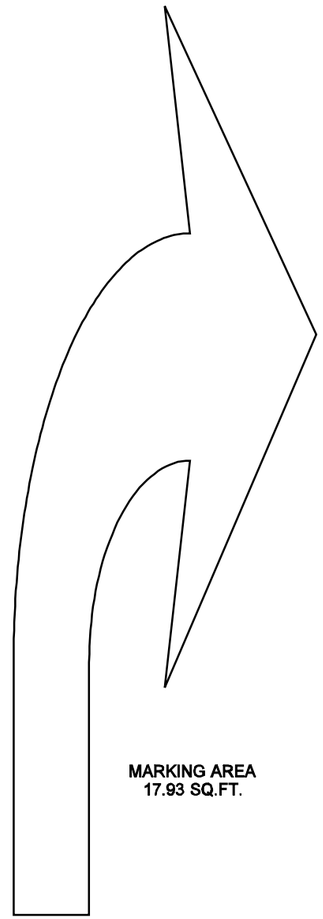

TYPE 2R (RIGHT)
TRAFFIC ARROW
MIRROR IMAGE OF
TYPE 2L TRAFFIC ARROW

NOTE

Use the dimensions shown on this plan for each type Traffic Arrow being placed on roadways with a posted speed limit of 45 mph or higher.

THEODORE J. TREPANIER
STATE OF WASHINGTON
25335
REGISTERED
PROFESSIONAL ENGINEER

EXPIRES AUGUST 9, 2007

NOTE: THIS PLAN IS NOT A LEGAL ENGINEERING DOCUMENT BUT AN ELECTRONIC DUPLICATE. THE ORIGINAL, SIGNED BY THE ENGINEER AND APPROVED FOR PUBLICATION, IS KEPT ON FILE AT THE WASHINGTON STATE DEPARTMENT OF TRANSPORTATION. A COPY MAY BE OBTAINED UPON REQUEST.

SYMBOL MARKINGS TRAFFIC ARROWS FOR HIGH SPEED ROADWAYS STANDARD PLAN M-24.20-01

SHEET 1 OF 3 SHEETS

APPROVED FOR PUBLICATION

Harold J. Peterfeso — STATE DESIGN ENGINEER
05-31-06 — DATE

Washington State Department of Transportation

EFFECTIVE: APRIL 2, 2007 TO JANUARY 6, 2008

EFFECTIVE: APRIL 2, 2007 TO JANUARY 6, 2008

DRAWN BY: MARK SUJKA

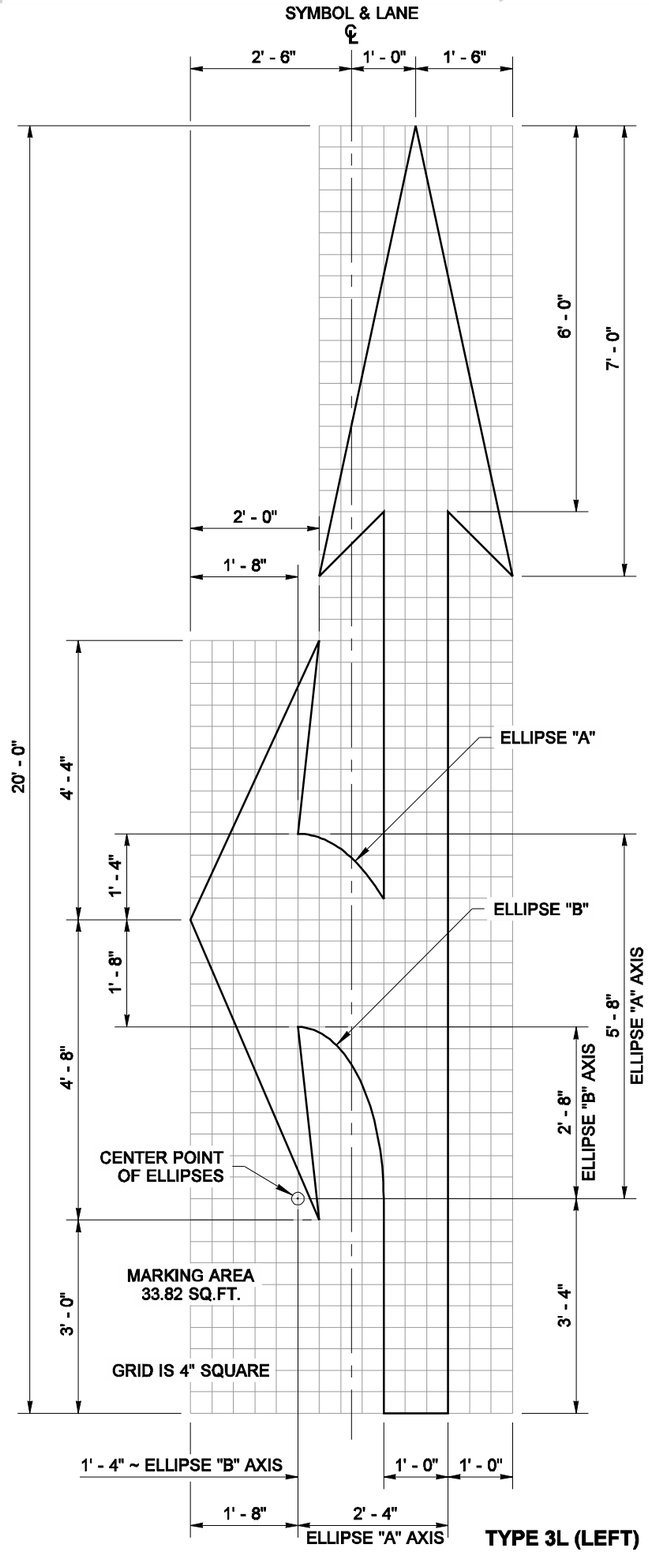

TYPE 3L (LEFT) TRAFFIC ARROW

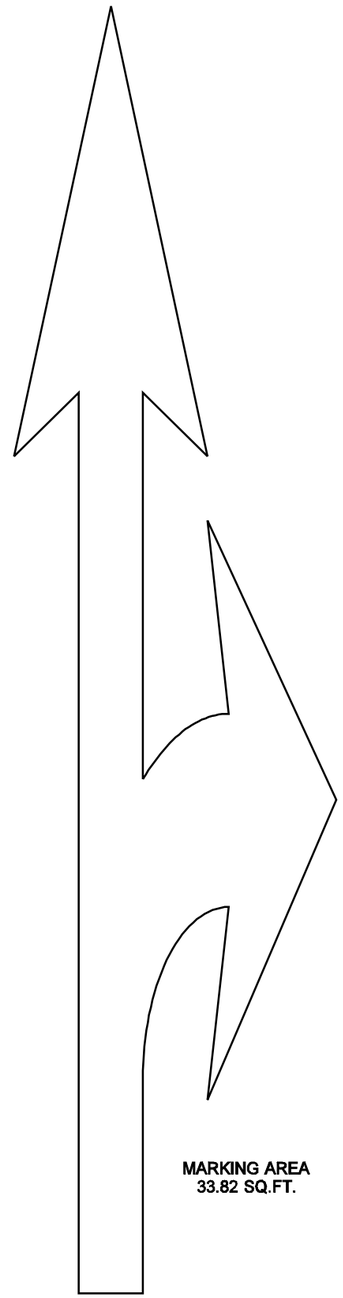

TYPE 3R (RIGHT) TRAFFIC ARROW

MIRROR IMAGE OF TYPE 3L TRAFFIC ARROW

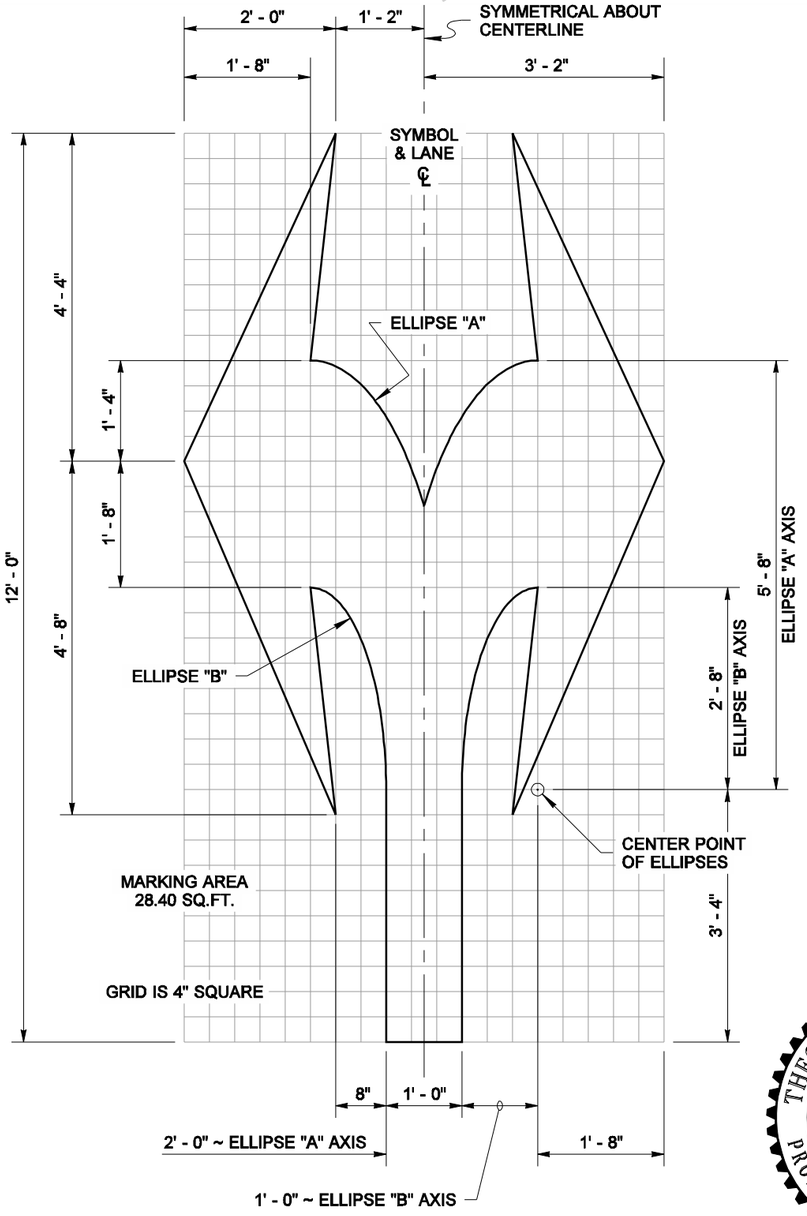

TYPE 4 TRAFFIC ARROW

THEODORE J. TREPANIER
STATE OF WASHINGTON
25335
REGISTERED
PROFESSIONAL ENGINEER

EXPIRES AUGUST 9, 2007

NOTE: THIS PLAN IS NOT A LEGAL ENGINEERING DOCUMENT BUT AN ELECTRONIC DUPLICATE. THE ORIGINAL, SIGNED BY THE ENGINEER AND APPROVED FOR PUBLICATION, IS KEPT ON FILE AT THE WASHINGTON STATE DEPARTMENT OF TRANSPORTATION. A COPY MAY BE OBTAINED UPON REQUEST.

SYMBOL MARKINGS TRAFFIC ARROWS FOR HIGH SPEED ROADWAYS STANDARD PLAN M-24.20-01

SHEET 2 OF 3 SHEETS

APPROVED FOR PUBLICATION

Harold J. Peterfeso — STATE DESIGN ENGINEER — *05-31-06* — DATE

Washington State Department of Transportation

EFFECTIVE: APRIL 2, 2007 TO JANUARY 6, 2008

EFFECTIVE: APRIL 2, 2007 TO JANUARY 6, 2008

DRAWN BY: MARK SUJKA

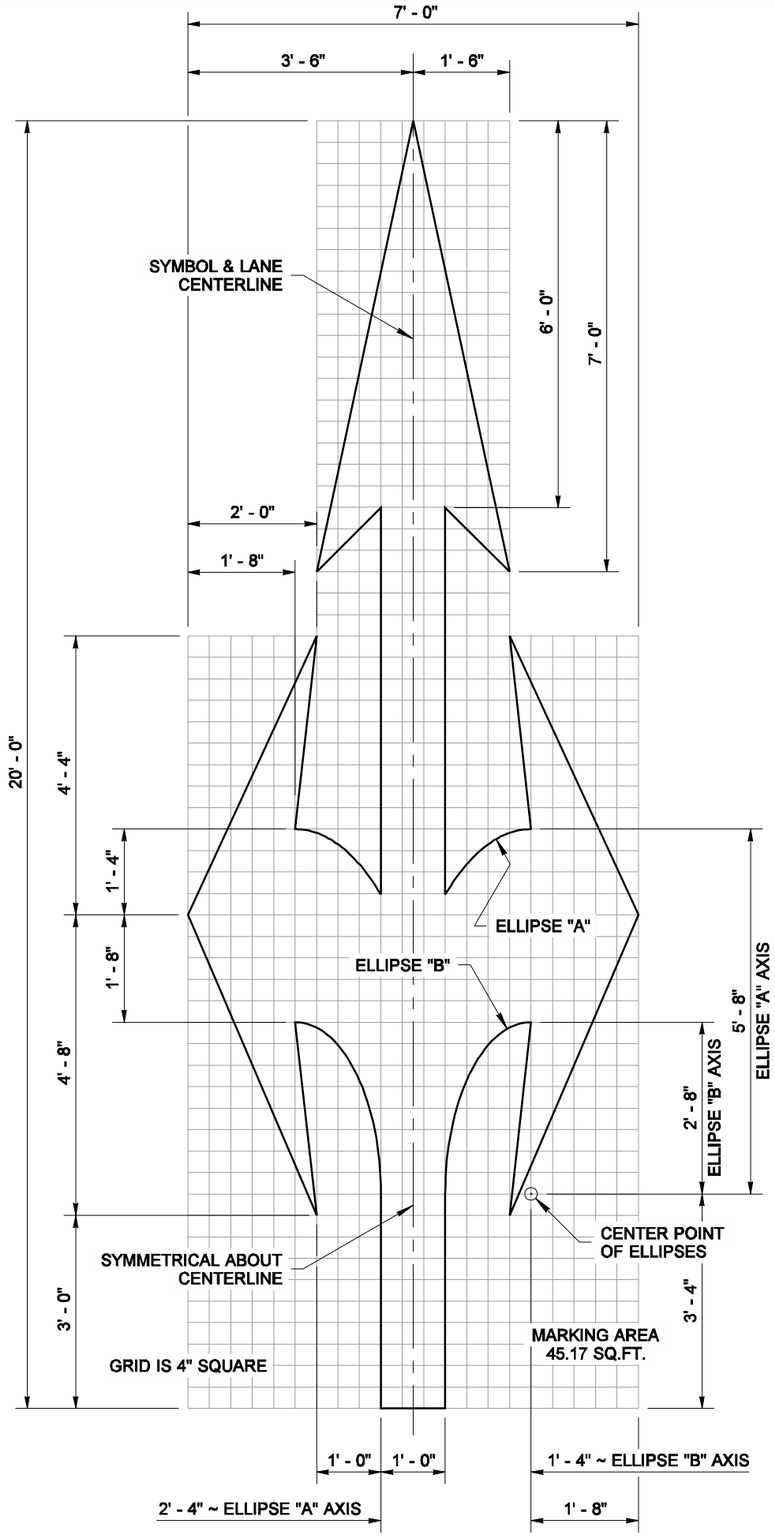

TYPE 7 TRAFFIC ARROW

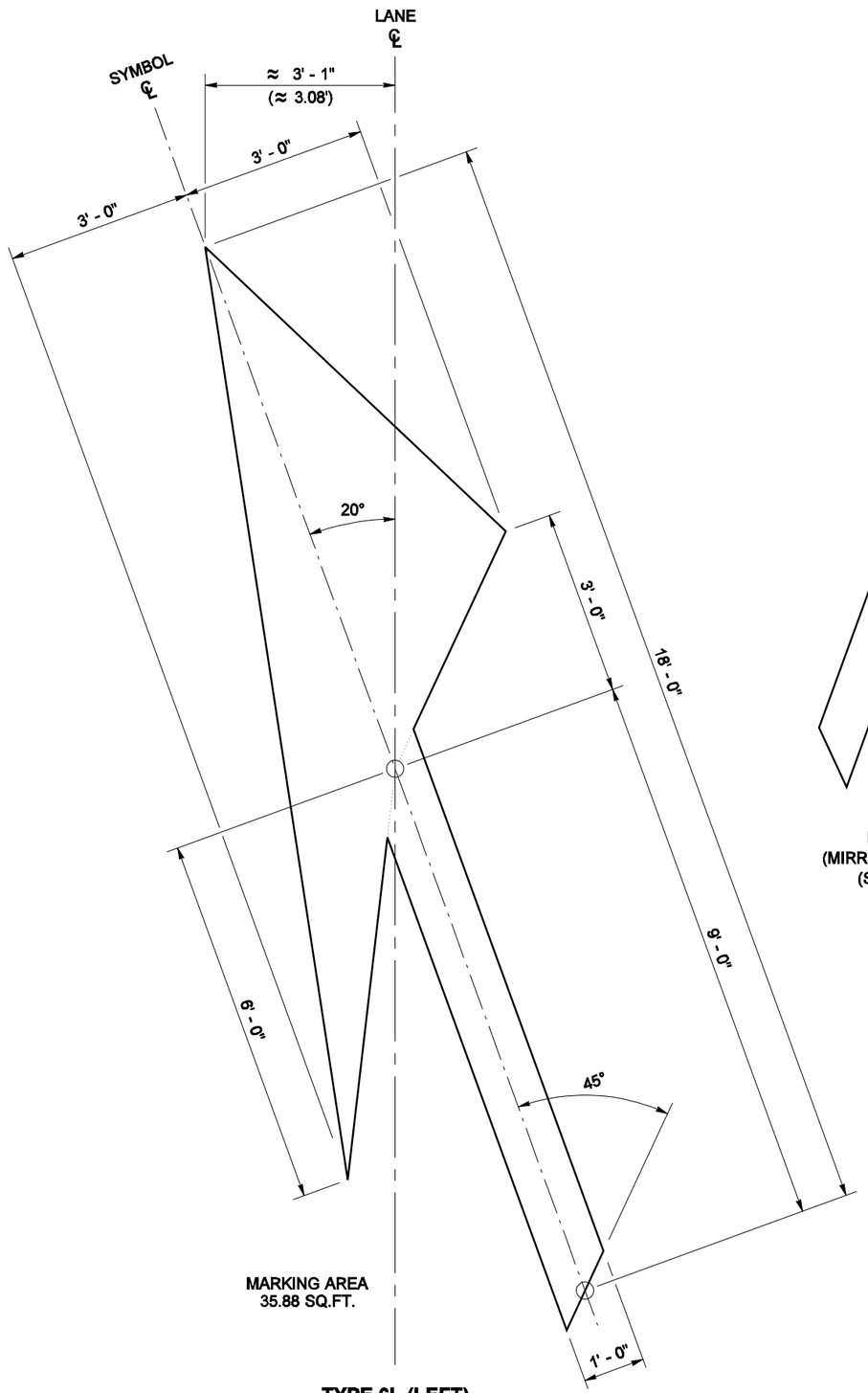

TYPE 6L (LEFT) TRAFFIC ARROW

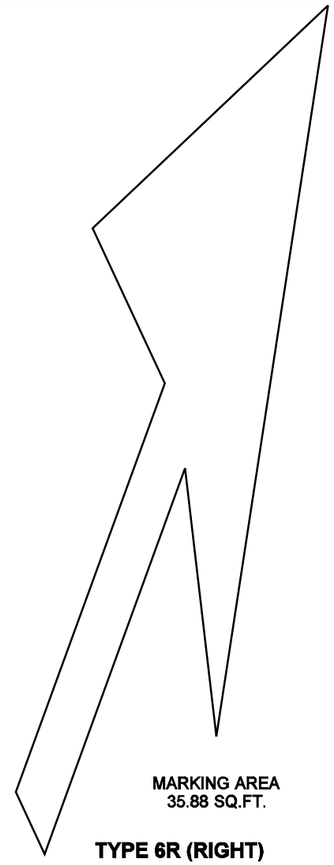

TYPE 6R (RIGHT) TRAFFIC ARROW

MIRROR IMAGE OF TYPE 6L
(MIRRORED ABOUT LANE CENTERLINE)
(SHOWN AT REDUCED SCALE)

THEODORE J. TREPANIER
STATE OF WASHINGTON
25335
REGISTERED
PROFESSIONAL ENGINEER

EXPIRES AUGUST 9, 2007

NOTE: THIS PLAN IS NOT A LEGAL ENGINEERING DOCUMENT BUT AN ELECTRONIC DUPLICATE. THE ORIGINAL, SIGNED BY THE ENGINEER AND APPROVED FOR PUBLICATION, IS KEPT ON FILE AT THE WASHINGTON STATE DEPARTMENT OF TRANSPORTATION. A COPY MAY BE OBTAINED UPON REQUEST.

SYMBOL MARKINGS TRAFFIC ARROWS FOR HIGH SPEED ROADWAYS STANDARD PLAN M-24.20-01

SHEET 3 OF 3 SHEETS

APPROVED FOR PUBLICATION

Harold J. Peterfeso — STATE DESIGN ENGINEER — *05-31-06* — DATE

Washington State Department of Transportation

EFFECTIVE: APRIL 2, 2007 TO JANUARY 6, 2008

EFFECTIVE: APRIL 2, 2007 TO JANUARY 6, 2008

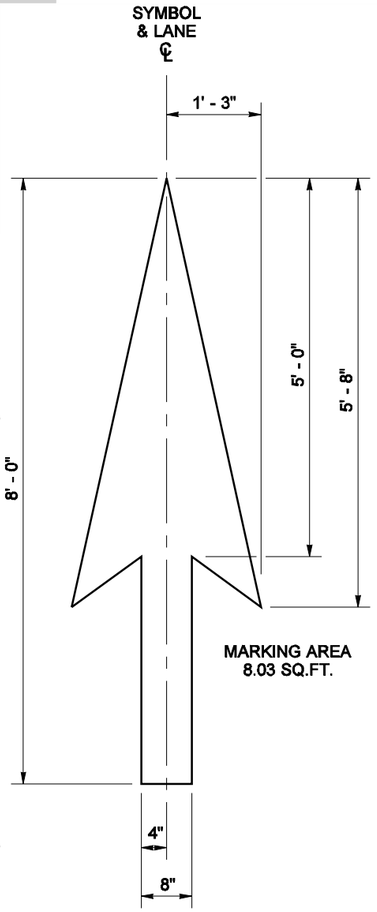

TYPE 1S
TRAFFIC ARROW



TYPE 2SR (RIGHT)
TRAFFIC ARROW

MIRROR IMAGE OF
TYPE 2SL TRAFFIC ARROW
(SHOWN AT REDUCED SCALE)

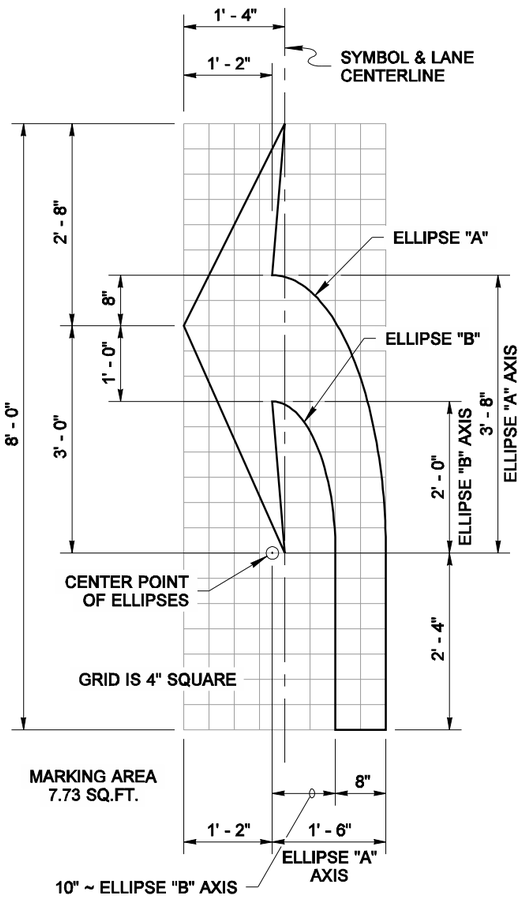

TYPE 2SL (LEFT) TRAFFIC ARROW

NOTE

Use the dimensions shown on this plan for each type Traffic Arrow being placed on roadways with a posted speed limit of 40 mph or lower.

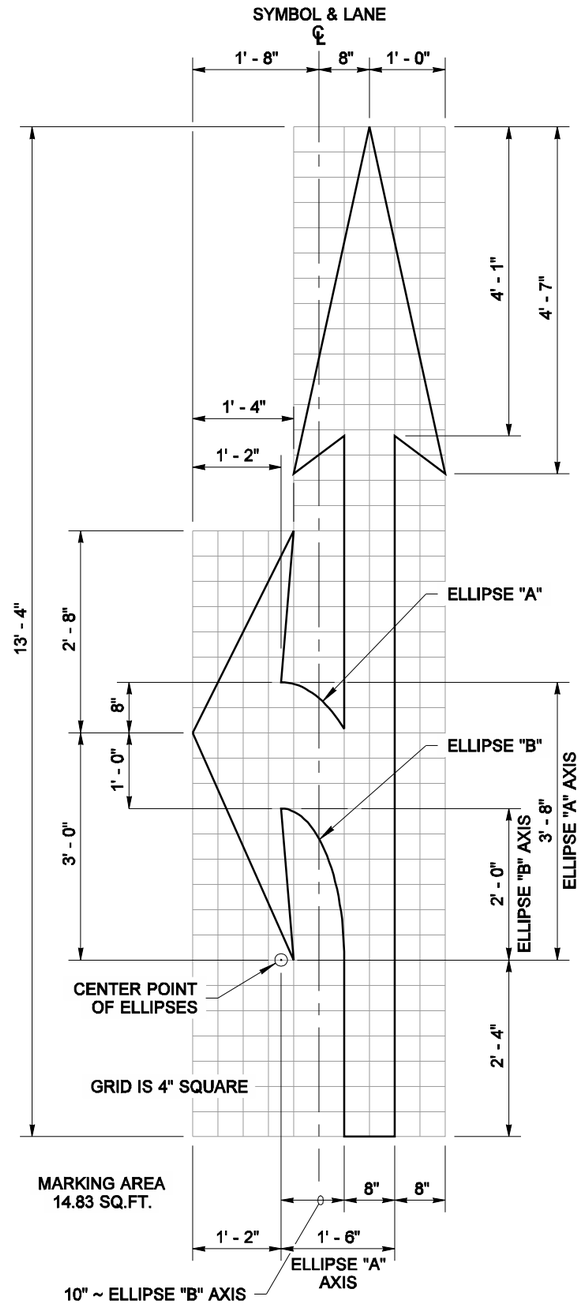

TYPE 3SL (LEFT) TRAFFIC ARROW

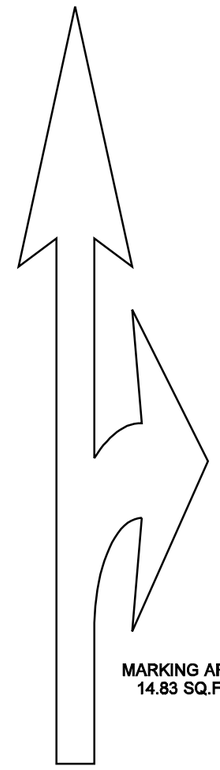

TYPE 3SR (RIGHT)
TRAFFIC ARROW

MIRROR IMAGE OF
TYPE 3SL TRAFFIC ARROW
(SHOWN AT REDUCED SCALE)

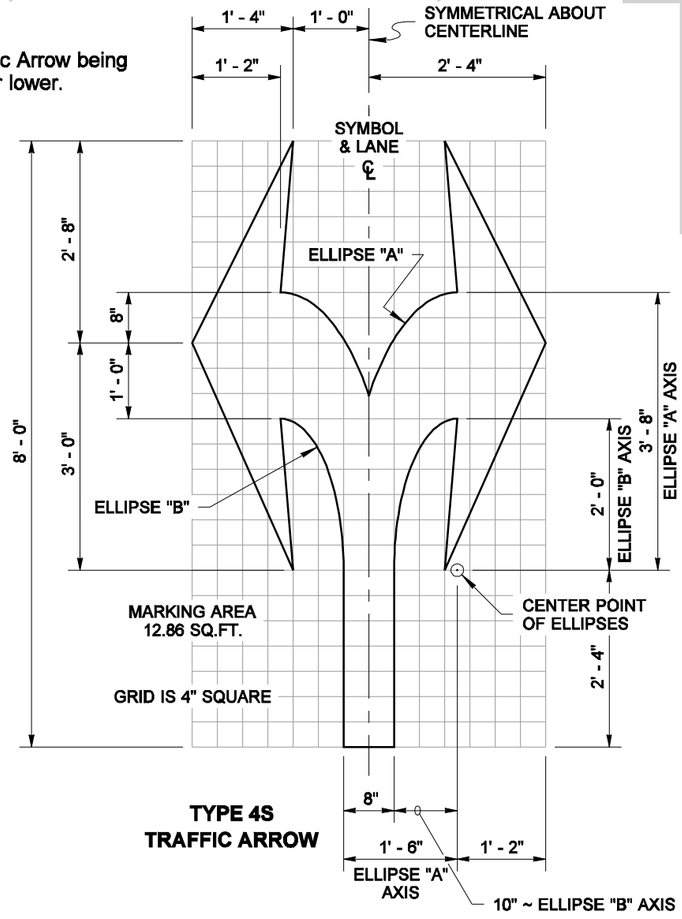

TYPE 4S
TRAFFIC ARROW

THEODORE J. TREPANIER
STATE OF WASHINGTON
25335
REGISTERED
PROFESSIONAL ENGINEER

EXPIRES AUGUST 9, 2007

NOTE: THIS PLAN IS NOT A LEGAL ENGINEERING DOCUMENT BUT AN ELECTRONIC DUPLICATE. THE ORIGINAL, SIGNED BY THE ENGINEER AND APPROVED FOR PUBLICATION, IS KEPT ON FILE AT THE WASHINGTON STATE DEPARTMENT OF TRANSPORTATION. A COPY MAY BE OBTAINED UPON REQUEST.

SYMBOL MARKINGS
TRAFFIC ARROWS FOR LOW SPEED ROADWAYS
STANDARD PLAN M-24.40-01

SHEET 1 OF 2 SHEETS

APPROVED FOR PUBLICATION

Harold J. Peterfeso — STATE DESIGN ENGINEER — *05-31-06* — DATE

Washington State Department of Transportation

DRAWN BY: MARK SUJKA

EFFECTIVE: APRIL 2, 2007 TO JANUARY 6, 2008

EFFECTIVE: APRIL 2, 2007 TO JANUARY 6, 2008

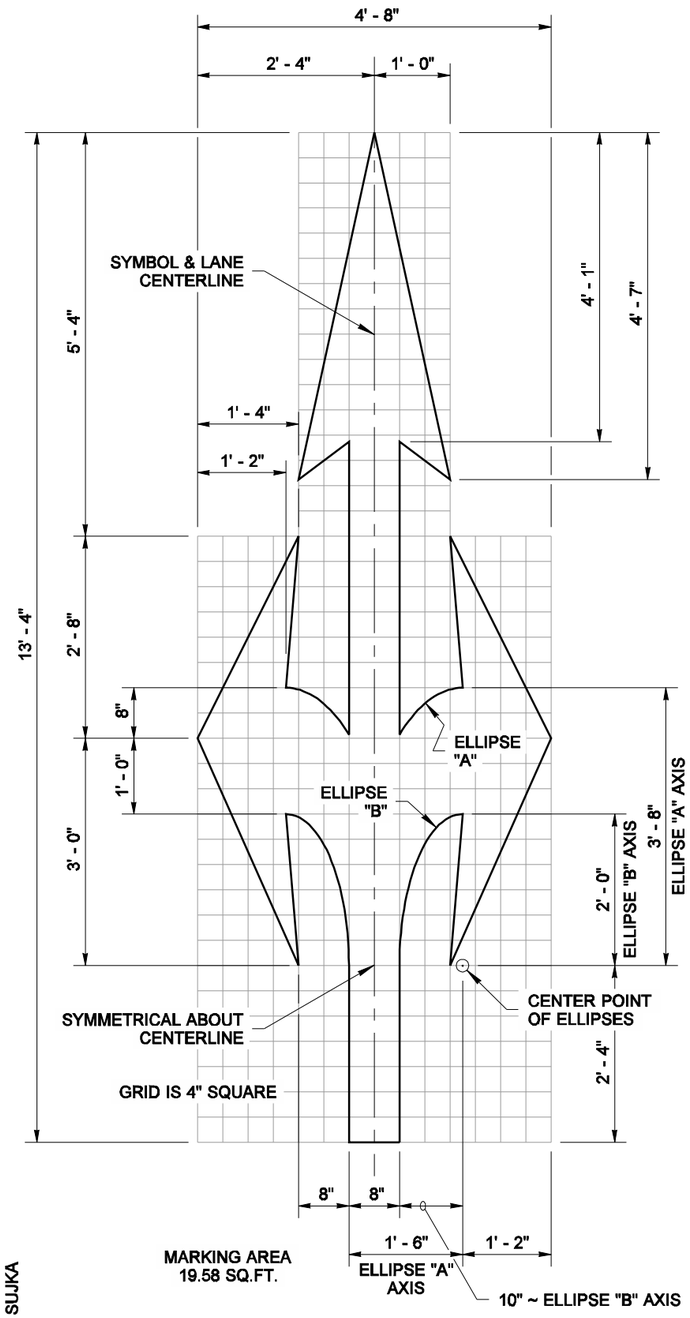

TYPE 7S TRAFFIC ARROW

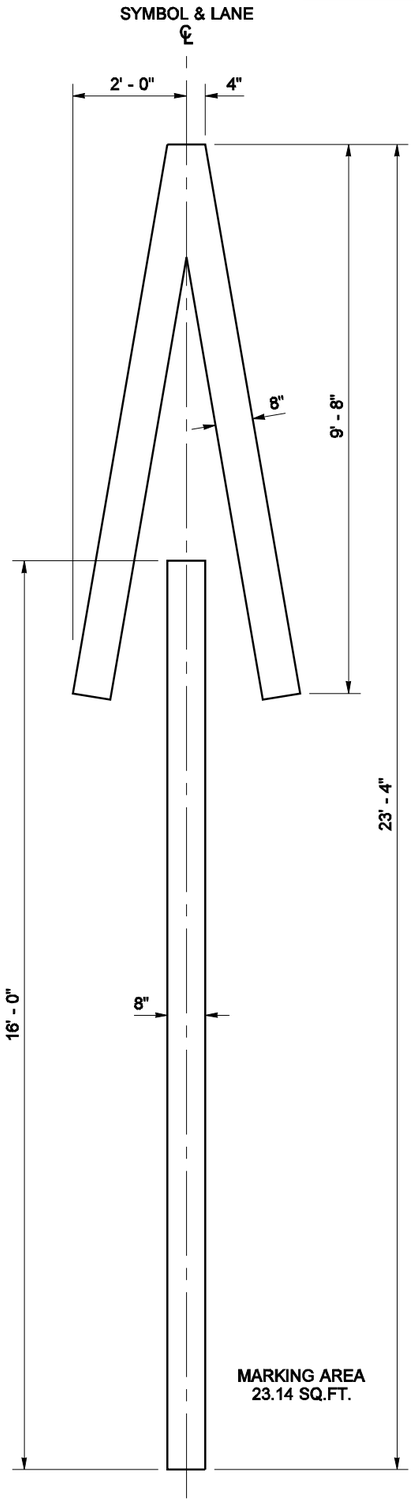

TYPE 5 TRAFFIC ARROW

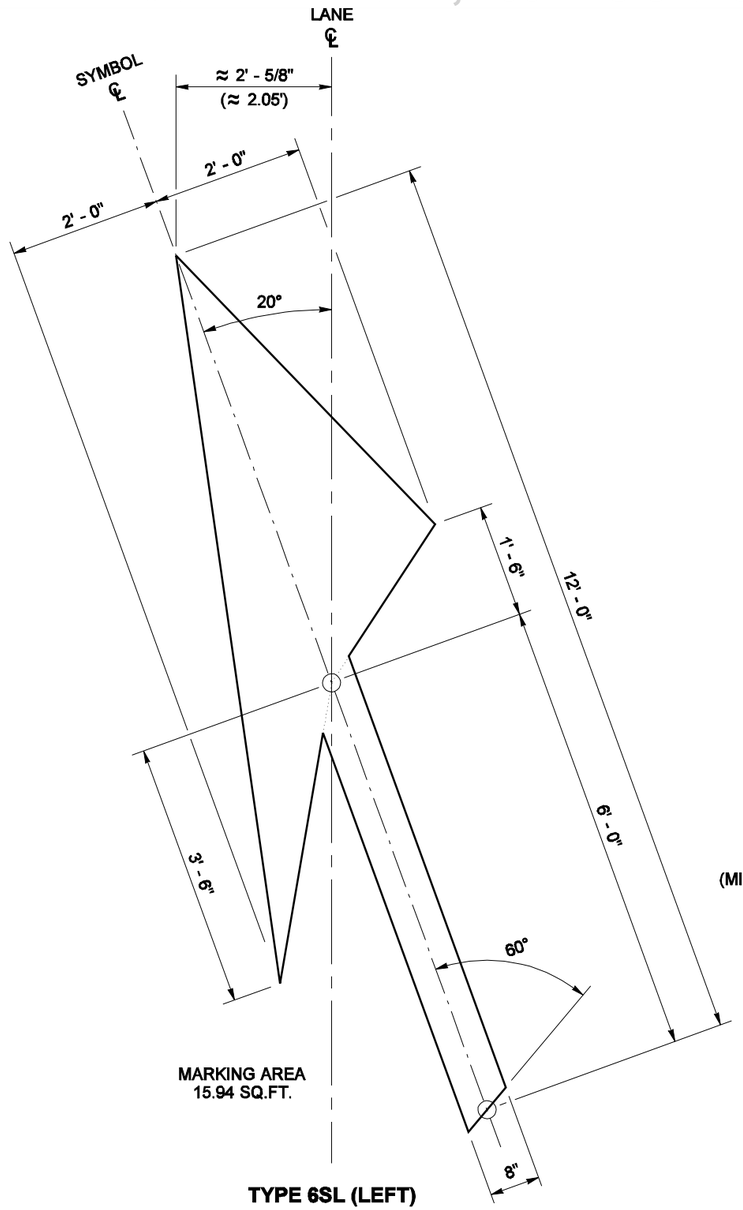

TYPE 6SL (LEFT) TRAFFIC ARROW

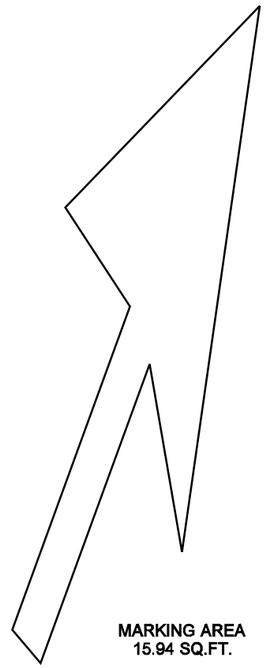

MARKING AREA
15.94 SQ.FT.

TYPE 6SR (RIGHT) TRAFFIC ARROW

MIRROR IMAGE OF TYPE 6SL
(MIRRORED ABOUT LANE CENTERLINE)
(SHOWN AT REDUCED SCALE)

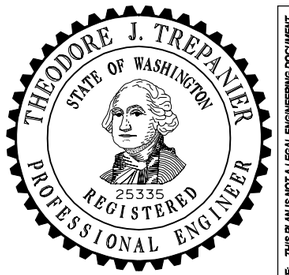

EXPIRES AUGUST 9, 2007

NOTE: THIS PLAN IS NOT A LEGAL ENGINEERING DOCUMENT BUT AN ELECTRONIC DUPLICATE. THE ORIGINAL, SIGNED BY THE ENGINEER AND APPROVED FOR PUBLICATION, IS KEPT ON FILE AT THE WASHINGTON STATE DEPARTMENT OF TRANSPORTATION. A COPY MAY BE OBTAINED UPON REQUEST.

SYMBOL MARKINGS TRAFFIC ARROWS FOR LOW SPEED ROADWAYS STANDARD PLAN M-24.40-01

SHEET 2 OF 2 SHEETS

APPROVED FOR PUBLICATION

Harold J. Peterfeso — STATE DESIGN ENGINEER — *05-31-06* — DATE

Washington State Department of Transportation

DRAWN BY: MARK SUJKA

EFFECTIVE: APRIL 2, 2007 TO JANUARY 6, 2008

EFFECTIVE: APRIL 2, 2007 TO JANUARY 6, 2008

EFFECTIVE: APRIL 2, 2007 TO JANUARY 6, 2008

DRAWN BY: MARK SUJKA

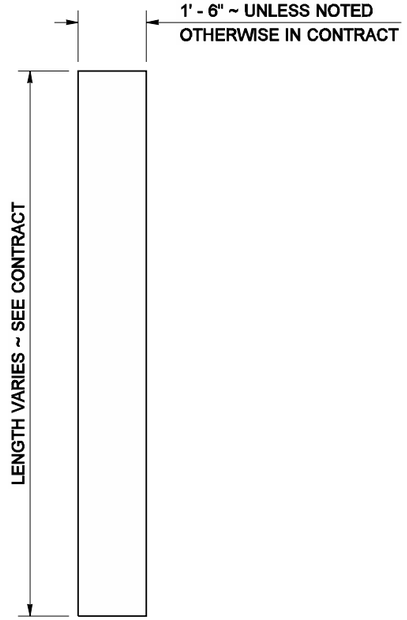

STOP LINE

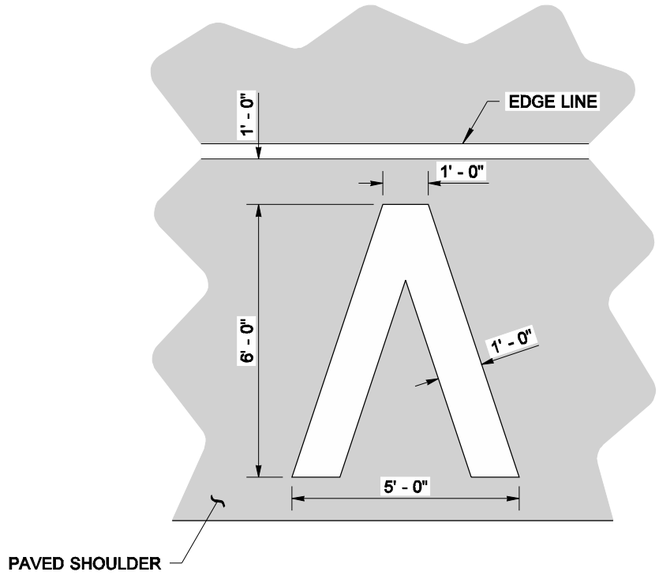

MARKING AREA = 11.73 SQ.FT.

HALF MARKER

(1/2 MILE INTERVAL)

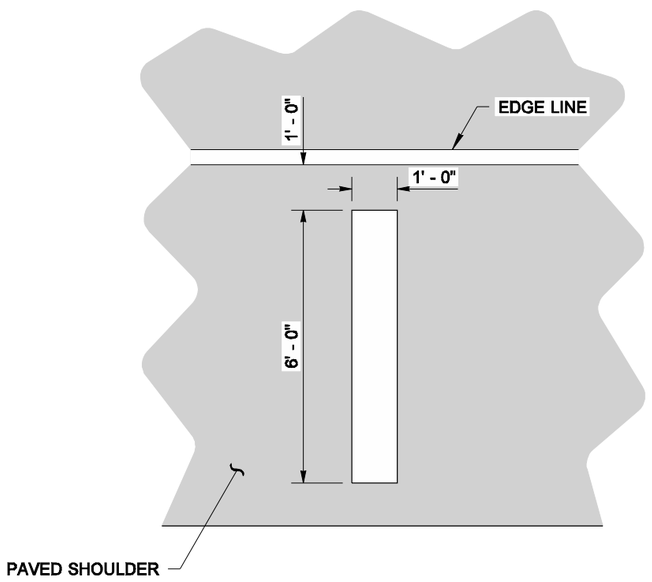

MARKING AREA = 6.00 SQ.FT.

FULL MARKER

(1 MILE INTERVAL)

AERIAL SURVEILLANCE MARKERS

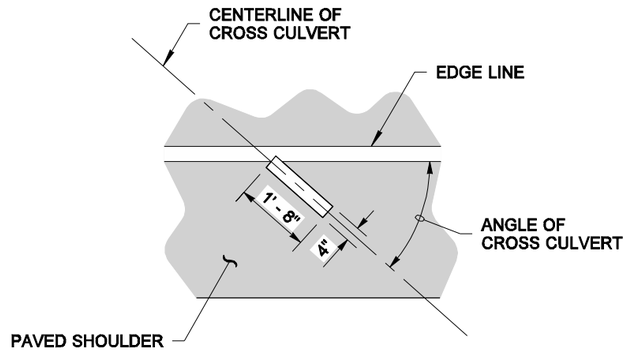

MARKING AREA = 0.56 SQ.FT.

CROSS CULVERT

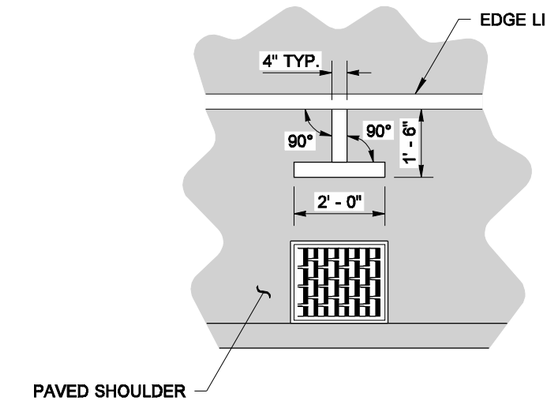

MARKING AREA = 1.06 SQ.FT.

DRAINAGE STRUCTURE INLET

DRAINAGE MARKING

THEODORE J. TREPANIER
STATE OF WASHINGTON
25335
REGISTERED
PROFESSIONAL ENGINEER

EXPIRES AUGUST 9, 2007

NOTE: THIS PLAN IS NOT A LEGAL ENGINEERING DOCUMENT BUT AN ELECTRONIC DUPLICATE. THE ORIGINAL, SIGNED BY THE ENGINEER AND APPROVED FOR PUBLICATION, IS KEPT ON FILE AT THE WASHINGTON STATE DEPARTMENT OF TRANSPORTATION. A COPY MAY BE OBTAINED UPON REQUEST.

SYMBOL MARKINGS MISCELLANEOUS

STANDARD PLAN M-24.60-02

SHEET 1 OF 2 SHEETS

APPROVED FOR PUBLICATION

Ken L. Smith — STATE DESIGN ENGINEER

02-06-07 — DATE

Washington State Department of Transportation

EFFECTIVE: APRIL 2, 2007 TO JANUARY 6, 2008

EFFECTIVE: APRIL 2, 2007 TO JANUARY 6, 2008

EFFECTIVE: APRIL 2, 2007 TO JANUARY 6, 2008

EFFECTIVE: APRIL 2, 2007 TO JANUARY 6, 2008

DRAWN BY: MARK SUJKA

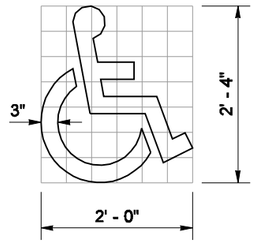

GRID IS 4" SQUARE MARKING AREA = 1.41 SQ.FT.

ACCESS PARKING SPACE SYMBOL (MINIMUM)

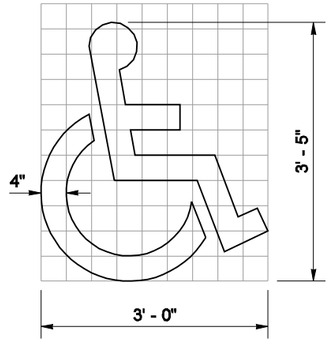

GRID IS 4" SQUARE MARKING AREA = 3.09 SQ.FT.

ACCESS PARKING SPACE SYMBOL (STANDARD)

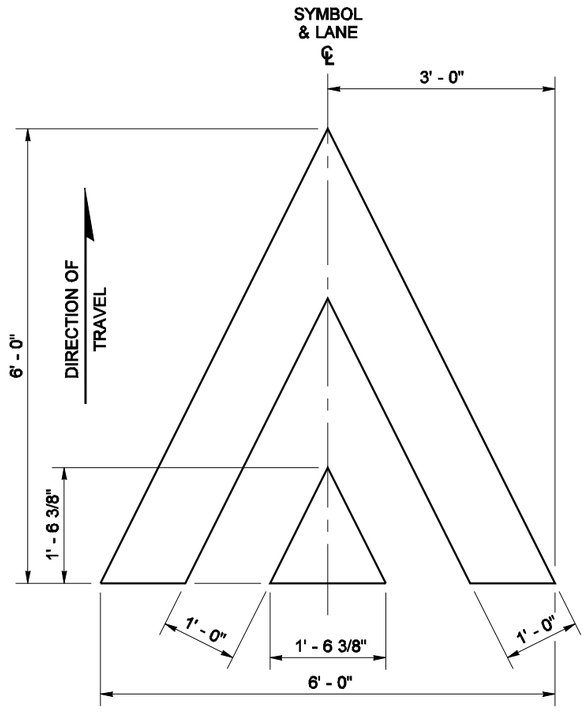

MARKING AREA = 12.08 SQ.FT.

SPEED BUMP SYMBOL

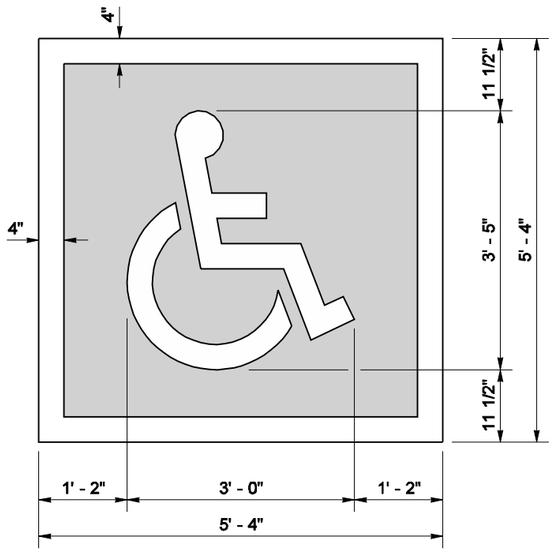

TOTAL MARKING AREA = 28.44 SQ.FT.
WHITE = 9.76 SQ.FT. BLUE = 18.69 SQ.FT.

ACCESS PARKING SPACE SYMBOL (STANDARD)
WITH BLUE BACKGROUND AND WHITE BORDER
(REQUIRED FOR CEMENT CONCRETE SURFACES)

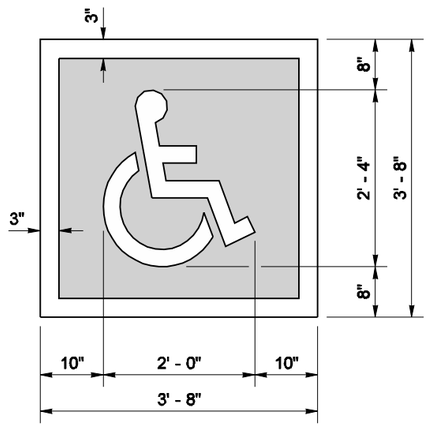

TOTAL MARKING AREA = 13.44 SQ.FT.
WHITE = 4.82 SQ.FT. BLUE = 8.62 SQ.FT.

ACCESS PARKING SPACE SYMBOL (MINIMUM)
WITH BLUE BACKGROUND AND WHITE BORDER
(REQUIRED FOR CEMENT CONCRETE SURFACES)

EFFECTIVE: APRIL 2, 2007 TO JANUARY 6, 2008

SYMBOL MARKING		A	B	C	USE	MARKING AREA
YIELD AHEAD SYMBOL	TYPE 1	6' - 0"	2' - 6"	13' - 0"	LESS THAN 45 MPH	25.90 SQ.FT.
	TYPE 2	6' - 0"	3' - 0"	20' - 0"	45 MPH OR GREATER	36.54 SQ.FT.
YIELD LINE SYMBOL	TYPE 1	1' - 0"	6"	1' - 6"	LESS THAN 45 MPH	0.75 SQ.FT.
	TYPE 2	2' - 0"	1' - 0"	3' - 0"	45 MPH OR GREATER	3.00 SQ.FT.

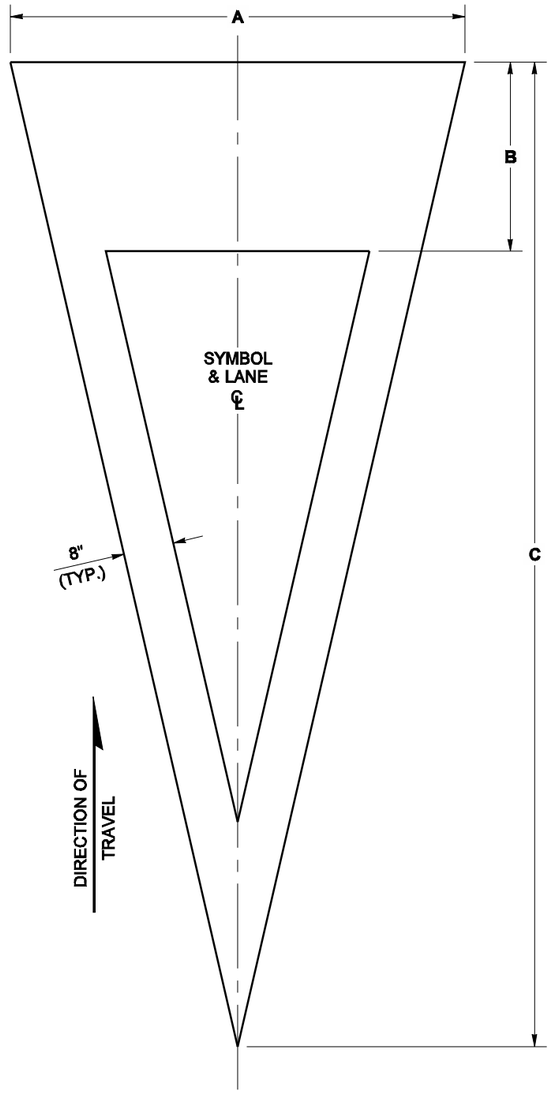

YIELD AHEAD SYMBOL

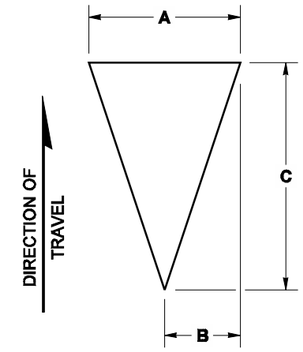

YIELD LINE SYMBOL
(MULTIPLE SYMBOLS REQUIRED FOR TRANSVERSE YIELD LINE ~ SEE CONTRACT)

THEODORE J. TREPANIER
STATE OF WASHINGTON
25335
REGISTERED
PROFESSIONAL ENGINEER

EXPIRES AUGUST 9, 2007

NOTE: THIS PLAN IS NOT A LEGAL ENGINEERING DOCUMENT BUT AN ELECTRONIC DUPLICATE. THE ORIGINAL, SIGNED BY THE ENGINEER AND APPROVED FOR PUBLICATION, IS KEPT ON FILE AT THE WASHINGTON STATE DEPARTMENT OF TRANSPORTATION. A COPY MAY BE OBTAINED UPON REQUEST.

SYMBOL MARKINGS MISCELLANEOUS

STANDARD PLAN M-24.60-02

APPROVED FOR PUBLICATION

Ken L. Smith *02-06-07*

STATE DESIGN ENGINEER DATE

Washington State Department of Transportation

EFFECTIVE: APRIL 2, 2007 TO JANUARY 6, 2008