DRAWN BY: BILL BERENS

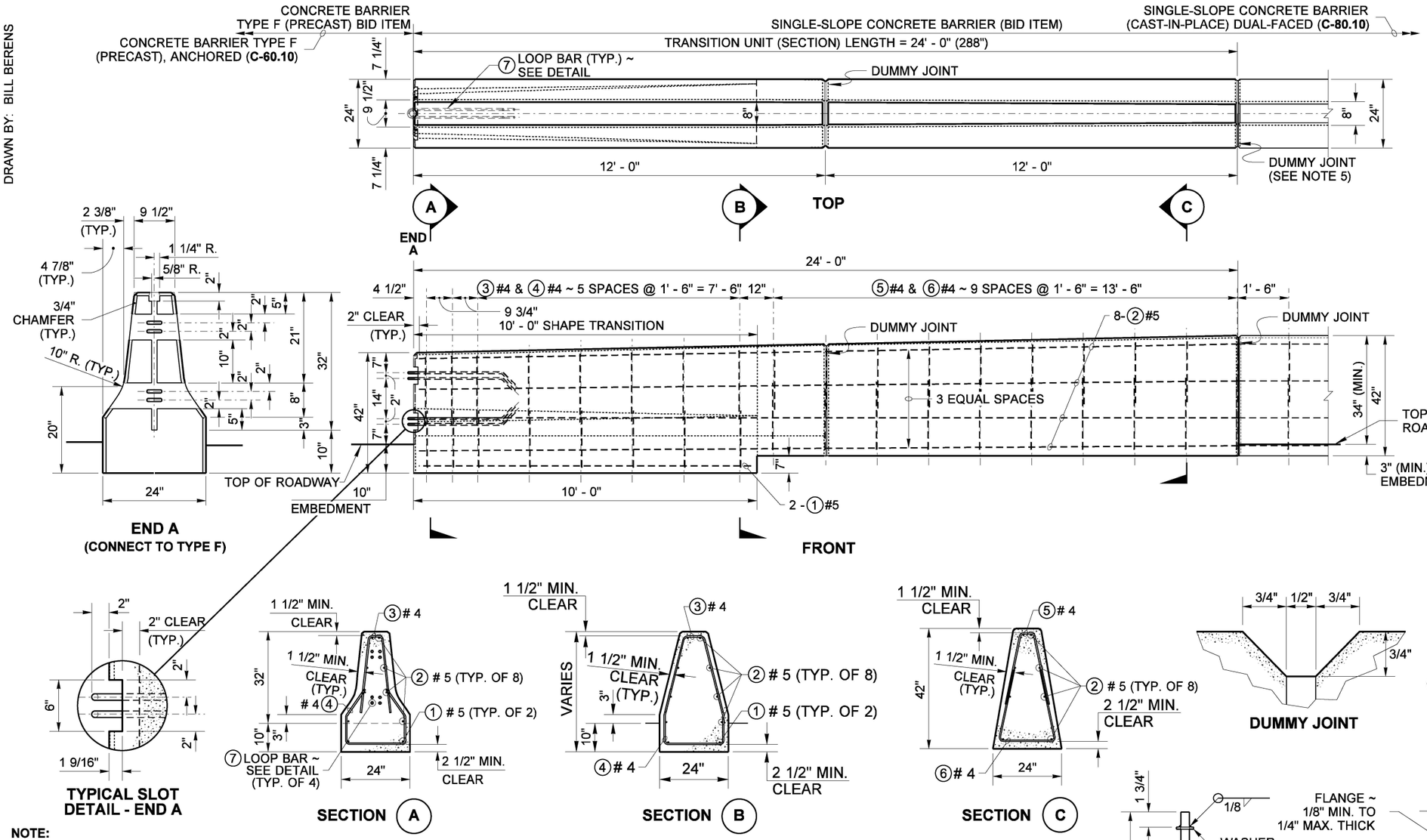

NOTES

1. Concrete shall be Class 4000.
2. Remove slack between barrier segments after inserting the connecting pin.
3. See **Standard Plan C-60.10** and **C-60.70** for anchoring the Type F barrier adjacent to transition.
4. Provide 2" minimum concrete cover over reinforcing steel, except for areas noted on plan.
5. The Type F to CIP Single-Slope Transition shall be cast-in -place monolithically with the CIP Single-Slope barrier run.
6. Connecting Pin head designs vary among different manufacturers. Pin designs that are shaped differently than those shown in the detail are acceptable, if the bearing surface is within the minimum and maximum widths specified.

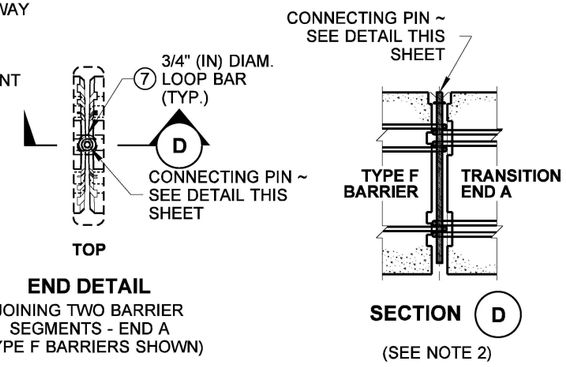

END DETAIL
JOINING TWO BARRIER SEGMENTS - END A
(TYPE F BARRIERS SHOWN)

TYPICAL SLOT DETAIL - END A

SECTION A

SECTION B

SECTION C

DUMMY JOINT

NOTE:
STEEL WELDED WIRE REINFORCEMENT DEFORMED FOR CONCRETE MAY BE SUBSTITUTED FOR REINFORCING STEEL IN ACCORDANCE WITH **STANDARD SPECIFICATION, SECTION 6-10.3**

REINFORCING STEEL BENDING DIAGRAM

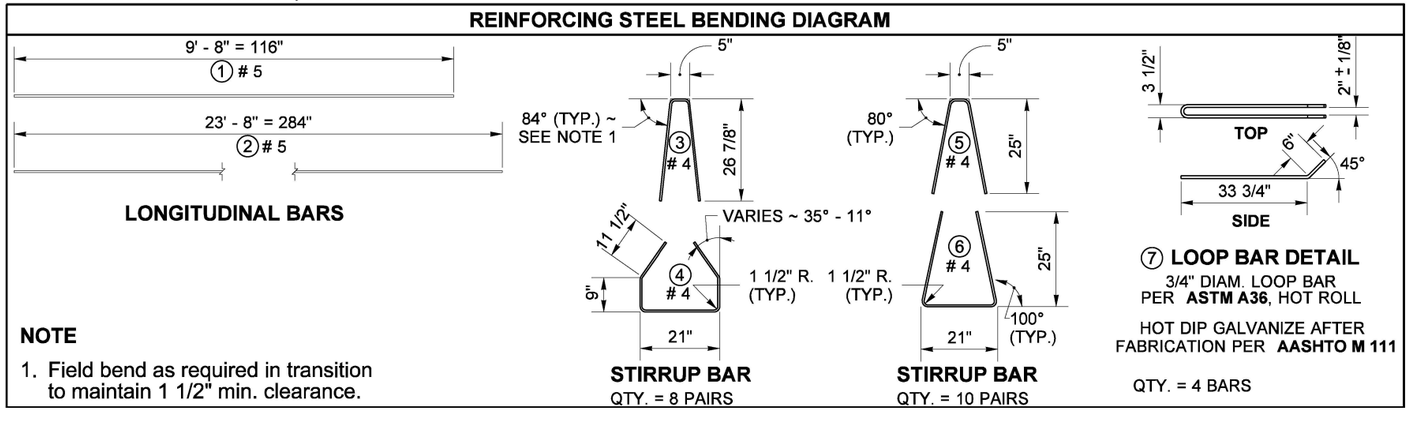

NOTE

1. Field bend as required in transition to maintain 1 1/2" min. clearance.

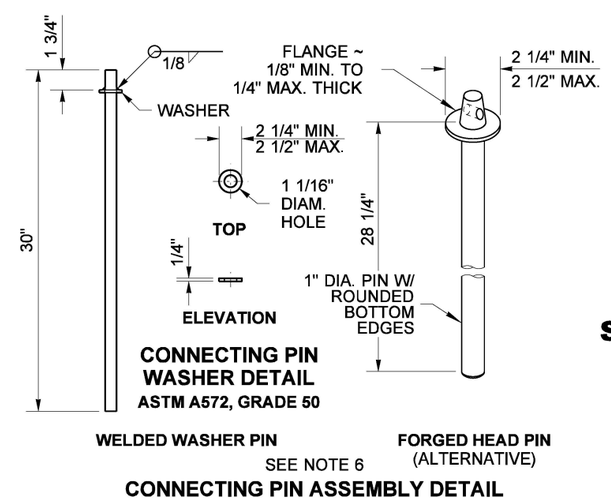

CONNECTING PIN WASHER DETAIL
ASTM A572, GRADE 50

CONNECTING PIN ASSEMBLY DETAIL
1" DIAMETER PER **ASTM A449**
HOT DIP GALVANIZE AFTER FABRICATION PER **ASTM F2329**

Jul 18, 2024

TYPE F TO CIP SINGLE-SLOPE BARRIER TRANSITION (CAST-IN-PLACE)

STANDARD PLAN C-60.40-01

SHEET 1 OF 1 SHEET

APPROVED FOR PUBLICATION
Mark A Gaines — Jul 21, 2024
STATE DESIGN ENGINEER
Washington State Department of Transportation