Washington State Department of Transportation
Bridge and Structures Office

Design Memorandum

TO: All Design Section Staff
FROM: Bijan Khaleghi
DATE: December 7, 2012
SUBJECT: STD Plans Noise Barrier Wall Type 11

This memorandum supersedes the design memorandum issued on January 14, 2012 for Type 11 Precast Concrete Noise Barrier Wall on Shaft Foundation. The January 14, 2012 policy memorandum remains effective for all other types of noise barrier walls until further notice.

The design of the Standard Plan Noise Barrier Type 11 shall be in accordance with the requirements of the AASHTO LRFD Bridge Design Specifications, 6th Edition 2012 and the requirements and guidance cited herein:

1. Load factors and load combinations for the design of all structural elements shall be in accordance with AASHTO LRFD Tables 3.4.1-1 and 3.4.1-2.

2. Seismic design shall be in accordance with AASHTO LRFD Article 3.10.2.1-General Procedure, considering site classes B, C, D, and E and the following:
   a. Peak seismic ground acceleration coefficient on Rock (Site Class B).
      - PGA = 0.45g for Western Washington
      - PGA = 0.19g for Eastern Washington
   b. Horizontal response spectral acceleration coefficient at 0.2-sec period on rock (Site Class B).
      - S_s = 1.00 for Western Washington
      - S_s = 0.43 for Eastern Washington
   c. Horizontal response spectral acceleration coefficient at 1.0-sec period on rock (Site Class B).
      - S_1 = 0.33 for Western Washington
      - S_1 = 0.15 for Eastern Washington
   d. Modal analysis shall be performed for the first four periods. The elastic seismic response coefficient C_{sm} shall be computed for each modal period in accordance with AASHTO LRFD Article 3.10.4.2 and all four C_{sm} coefficients shall be combined through the SRSS method.
   e. The resultant seismic force shall be considered to act at a height of 0.71H above the top of the shaft, where H is the total height measured from the top of the panel to the top of the shaft.

3. Wind loads shall be computed in accordance with AASHTO LRFD Article 15.8.2 considering surface conditions characterized as “Sparse Suburban”. The 50 year return period maximum wind velocity, as determined from AASHTO LRFD Figure 15.8.2-1, is 100 mph for Western Washington and 80 mph for Eastern Washington.

4. Drilled shaft foundations shall be designed for earth pressure distributions as shown in AASHTO LRFD Figure 3.11.5.10-1 considering the following:
   a. Shaft depth, D1
      - 2H:1V fore-slope and a flat backslope
      - Angle of internal friction = 32 degrees
      - Soil unit weight = 125pcf
      - Corresponding $K_p = 1.5$
      - Corresponding $K_a = 0.28$
   b. Shaft depth, D2
      - 2H:1V fore-slope and a flat backslope
      - Angle of internal friction = 38 degrees
      - Soil unit weight = 125pcf
      - Corresponding $K_p = 2.3$
      - Corresponding $K_a = 0.22$
   c. The passive earth pressure distribution shall be assumed to start at the finished grade. However, the uppermost two feet of passive earth pressure shall be neglected, resulting in a trapezoidal passive earth pressure distribution.
   d. In accordance with AASHTO LRFD Table 11.5.7-1 and Article 11.5.8, the resistance factor applied to the passive earth pressure shall be as follows:
      - For the Strength Limit State, the resistance factor is taken as 0.75.
      - For the Extreme Event Limit State, the resistance factor is taken as 1.0.

The details for Type 11 Noise Barrier Walls are attached for immediate use.

Background:

WSDOT is in process of upgrading STD Plans Manual M21-01 Noise Barrier Walls to the current AASHTO LRFD Bridge Design Specifications, WSDOT Bridge Design and Geotechnical Manuals. Type 11 is the first of the STD Plans Noise Barrier Walls upgraded to the current requirement.

If you have any questions regarding these issues, please contact David Sawahata at 360-705-6941 (sawahsD@wsdot.wa.gov), Monique Pawelka at 360-705-7754 (powelkM@wsdot.wa.gov), or Bijan Khaleghi at 360-705-7181 (khalegb@wsdot.wa.gov) .

cc: Mark Gaines, Bridge Construction - 47354
F. Posner, Bridge and Structures – 47340

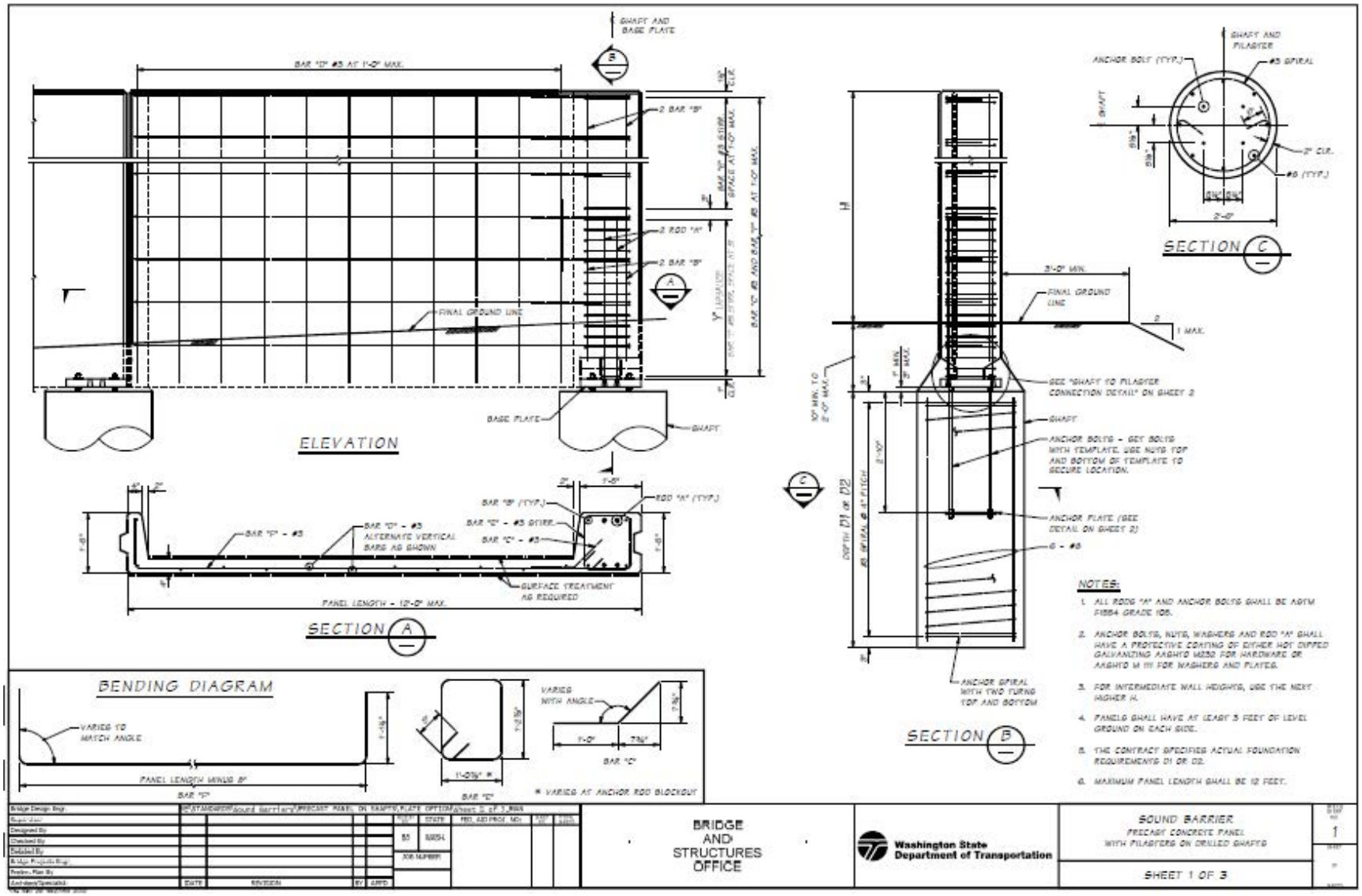
SHAFT AND BASE PLATE
BAR "D" #5 AT 1'-0" MAX.
2 BAR "B"
2 ROD "A"
2 BAR "B"
FINAL GROUND LINE
BASE PLATE
SHAFT
ELEVATION
BAR "B" (TYP.)
ROD "A" (TYP.)
BAR "C" - #5 SKIRT
BAR "C" - #5
BAR "D" - #5 ALTERNATE VERTICAL BARS AS SHOWN
BAR "F" - #5
SURFACE TREATMENT AS REQUIRED
PANEL LENGTH = 12'-0" MAX.
SECTION A
BENDING DIAGRAM
VARIES TO MATCH ANGLE
PANEL LENGTH MINUS 8"
BAR "F"
BAR "C"
VARIES WITH ANGLE
BAR "C"
* VARIES AT ANCHOR ROD BLOCKOUT
SHAFT AND PILASTER
ANCHOR BOLT (TYP.)
#5 SPIRAL
SHAFT
2" CLR.
#6 (TYP.)
SECTION C
H
21'-0" MIN.
FINAL GROUND LINE
2
1 MAX.
SEE "SHAFT TO PILASTER CONNECTION DETAIL" ON SHEET 2
SHAFT
ANCHOR BOLTS - SET BOLTS WITH TEMPLATE. USE NUTS TOP AND BOTTOM OF TEMPLATE TO SECURE LOCATION.
ANCHOR PLATE (SEE DETAIL ON SHEET 2)
6 - #6
DEPTH D1 OR D2
ANCHOR SPIRAL WITH TWO TURNS TOP AND BOTTOM
SECTION B
NOTES:
1. ALL ROD "A" AND ANCHOR BOLTS SHALL BE ASTM F1554 GRADE 105.
2. ANCHOR BOLTS, NUTS, WASHERS AND ROD "A" SHALL HAVE A PROTECTIVE COATING OF EITHER HOT DIPPED GALVANIZING AASHTO M232 FOR HARDWARE OR AASHTO M 111 FOR WASHERS AND PLATES.
3. FOR INTERMEDIATE WALL HEIGHTS, USE THE NEXT HIGHER H.
4. PANELS SHALL HAVE AT LEAST 5 FEET OF LEVEL GROUND ON EACH SIDE.
5. THE CONTRACT SPECIFIES ACTUAL FOUNDATION REQUIREMENTS D1 OR D2.
6. MAXIMUM PANEL LENGTH SHALL BE 12 FEET.
BRIDGE AND STRUCTURES OFFICE
Washington State Department of Transportation
SOUND BARRIER
PRECAST CONCRETE PANEL WITH PILASTERS ON DRILLED SHAFTS
SHEET 1 OF 3

EXPOSED WALL HT. H	WESTERN WASHINGTON								
	SHAFT DEPTH		ROD "A" DIAM.	BAR "B"	LAPSPLICE Y	ANCHOR BOLT DIAM.	BASE PLATE		
	D1	D2					F	G	T
6'-0"	5'-6"	4'-6"	1/2"	4^#4	2'-3"	1/2"	11/8"	1 21/32"	1 1/2"
8'-0"	6'-6"	5'-3"	5/8"	4^#4	2'-9"	1/2"	11/8"	1 21/32"	1 1/2"
10'-0"	7'-3"	6'-0"	3/4"	4^#5	3'-0"	5/8"	11/8"	1 21/32"	1 1/2"
12'-0"	8'-3"	7'-0"	7/8"	4^#6	3'-9"	3/4"	11/8"	1 21/32"	1 1/2"
14'-0"	9'-0"	7'-6"	1"	4^#6	5'-9"	1"	13/8"	2"	2"
16'-0"	9'-9"	8'-3"	1 1/4"	4^#6	7'-9"	1 1/8"	13/8"	2"	2"
18'-0"	10'-6"	8'-9"	1 1/4" *	4^#6	9'-9"	1 1/4"	*	*	2 1/4"
20'-0"	11'-3"	9'-6"	SPECIAL DESIGN						

EXPOSED WALL HT. H	EASTERN WASHINGTON								
	SHAFT DEPTH		ROD "A" DIAM.	BAR "B"	LAPSPLICE Y	ANCHOR BOLT DIAM.	BASE PLATE		
	D1	D2					F	G	T
6'-0"	4'-9"	3'-9"	1/2"	4^#4	2'-3"	1/2"	11/8"	1 21/32"	1 1/2"
8'-0"	5'-3"	4'-6"	1/2"	4^#4	2'-3"	1/2"	11/8"	1 21/32"	1 1/2"
10'-0"	6'-3"	5'-3"	5/8"	4^#4	3'-9"	5/8"	11/8"	1 21/32"	1 1/2"
12'-0"	7'-6"	6'-3"	3/4"	4^#5	3'-9"	5/8"	11/8"	1 21/32"	1 1/2"
14'-0"	8'-0"	6'-9"	7/8"	4^#6	3'-9"	3/4"	11/8"	1 21/32"	1 1/2"
16'-0"	8'-9"	7'-3"	1"	4^#6	6'-0"	7/8"	13/8"	2"	2"
18'-0"	9'-6"	8'-0"	1 1/8"	4^#7	6'-0"	1"	13/8"	2"	2"
20'-0"	10'-0"	8'-6"	1 1/4"	4^#7	6'-3"	1 1/8"	13/8"	2"	2"

* ONLY ANCHOR BOLT OPTION FOR ROD "A" ALLOWED, WEDGE HEAD OPTION NOT ALLOWED

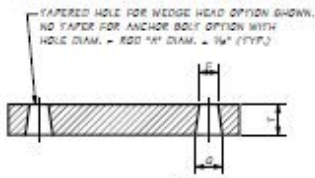

SECTION B

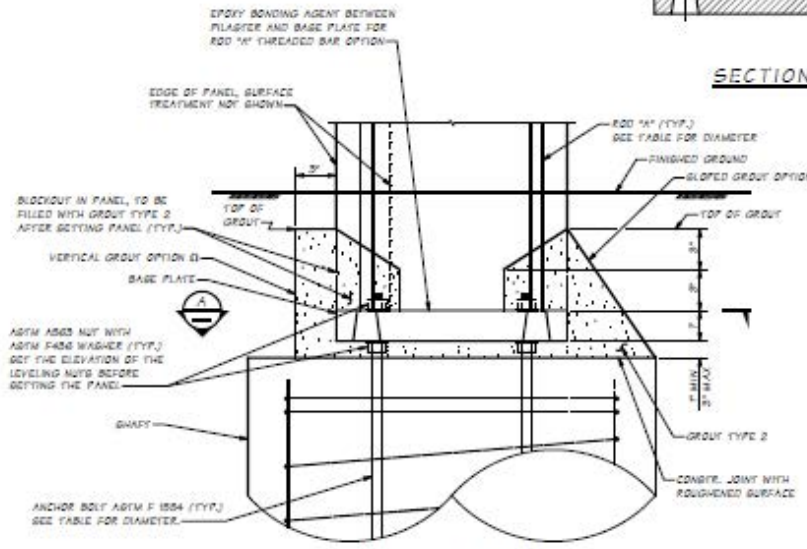

SHAFT TO PANEL CONNECTION DETAIL

D EITHER OPTION ACCEPTABLE TO GROUT BLOCKOUTS, ANCHOR BOLTS, BASE PLATE TO LIMITS SHOWN.

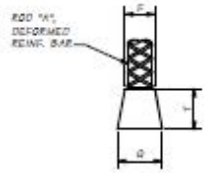

ROD "A" WEDGE HEAD OPTION

ASTM A 706 GR 60 AS ALLOWED PER TABLE, FOR HEIGHTS "H" ≤ 16' IN WEST AND HEIGHTS "H" ≤ 18' IN EAST

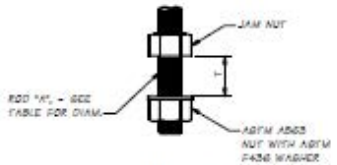

ROD "A" ANCHOR BOLT OPTION

ASTM F 1554 GR 105 FOR ALL HEIGHTS "H"

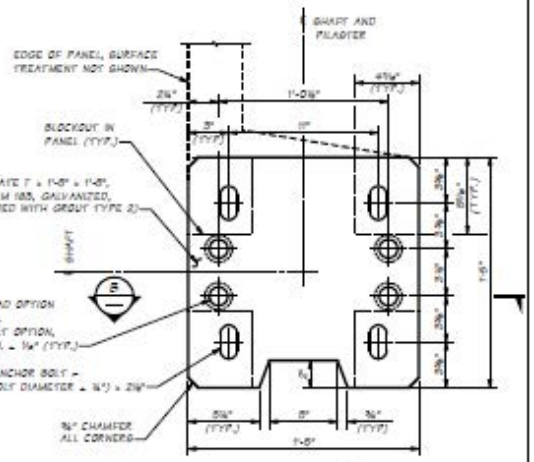

SECTION A

BASE PLATE, SHAFT NOT SHOWN FOR CLARITY

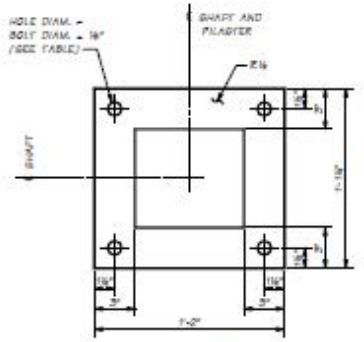

ANCHOR PLATE DETAIL

Bridge Design Engr.	SOUND BARRIER PRECAST PANEL ON SHAFTS PLATE OPTION Sheet 2 of 3 Sheets						
Project Engr.							
Designed By							
Checked By							
Detailed By							
Bridge Projects Engr.							
Region Plan Br.							
Contracts/Specialist	DATE	REVISION	BY	APP'D			

STATE	FED. AID PROJ. NO.	TOTAL SHEETS	SHEET NO.
WA			
JOB NUMBER			

BRIDGE AND STRUCTURES OFFICE

Washington State Department of Transportation

SOUND BARRIER
PRECAST CONCRETE PANEL WITH PILASTERS ON DRILLED SHAFTS

SHEET 2 OF 3

2

4

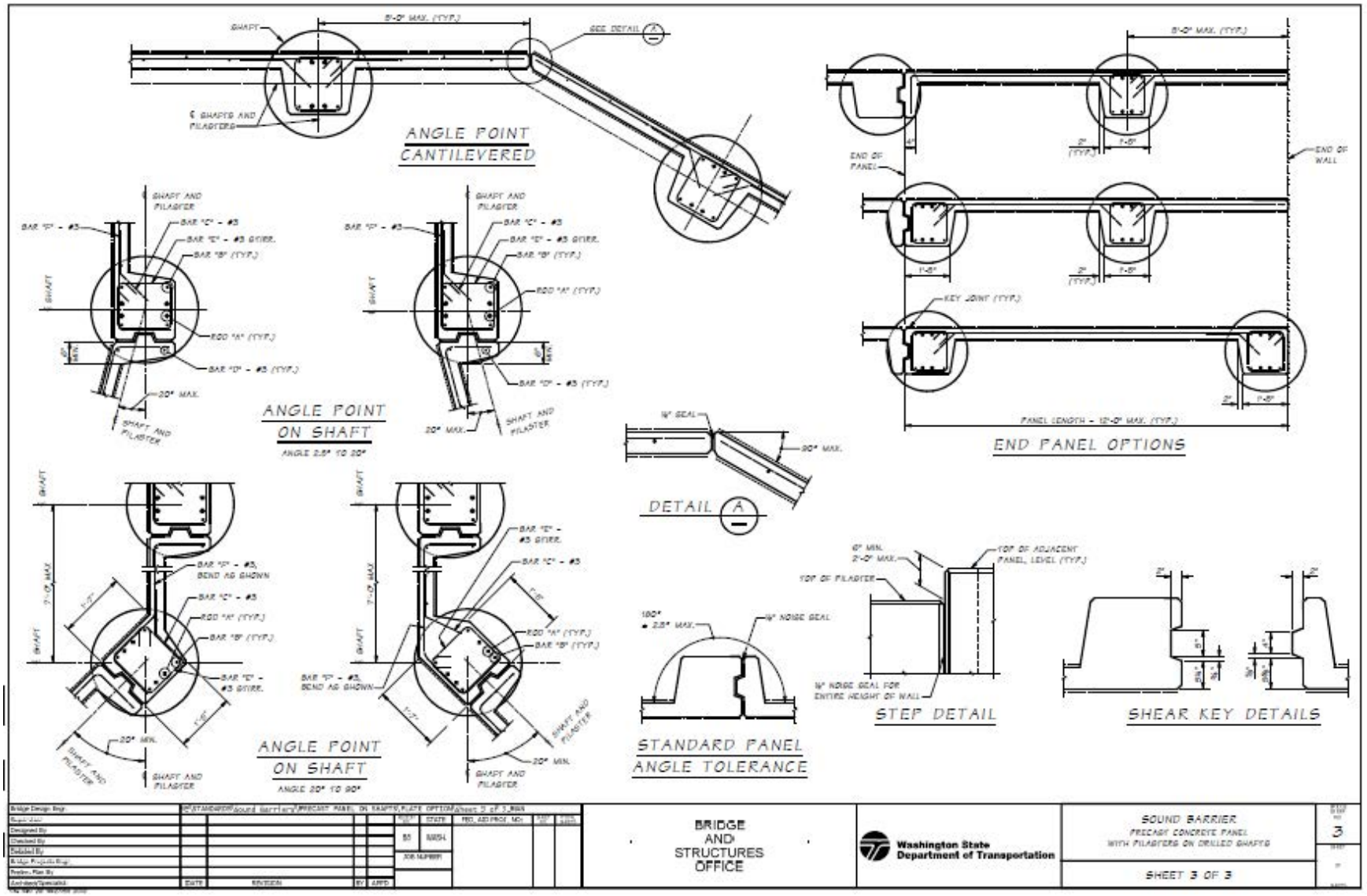
ANGLE POINT
CANTILEVERED
ANGLE POINT
ON SHAFT
ANGLE 2.5° TO 20°
ANGLE POINT
ON SHAFT
ANGLE 20° TO 90°
END PANEL OPTIONS
DETAIL A
STANDARD PANEL
ANGLE TOLERANCE
STEP DETAIL
SHEAR KEY DETAILS
BRIDGE
AND
STRUCTURES
OFFICE
Washington State
Department of Transportation
SOUND BARRIER
PRECAST CONCRETE PANEL
WITH FILABERS ON DRILLED SHAFTS
SHEET 3 OF 3

BDM Revisions:

8.1.3 Design

F. Noise Barrier Walls

The design of the Standard Plan Noise Barrier Type 11 walls shall be in accordance with the requirements of the AASHTO LRFD Bridge Design Specifications, 6th Edition 2012 (AASHTO LRFD) and the requirements and guidance cited herein:

1. Load factors and load combinations for the design of all structural elements are in accordance with AASHTO LRFD Tables 3.4.1-1 and 3.4.1-2.

2. Seismic design shall be in accordance with AASHTO LRFD Article 3.10.2.1-General Procedure, considering site classes B, C, D, and E and the following:
   a. Peak seismic ground acceleration coefficient on Rock (Site Class B).
      i. PGA = 0.45g for Western Washington
      ii. PGA = 0.19g for Eastern Washington
   b. Horizontal response spectral acceleration coefficient at 0.2-sec period on rock (Site Class B).
      i. S_s = 1.00 for Western Washington
      ii. S_s = 0.43 for Eastern Washington
   c. Horizontal response spectral acceleration coefficient at 1.0-sec period on rock (Site Class B).
      i. S_1 = 0.33 for Western Washington
      ii. S_1 = 0.15 for Eastern Washington
   d. Modal analysis shall be performed for the first four periods. The elastic seismic response coefficient C_{sm} shall be computed for each modal period in accordance with AASHTO LRFD Article 3.10.4.2 and all four C_{sm} coefficients shall be combined through the SRSS method.
   e. The resultant seismic force shall be considered to act at a height of 0.71H above the top of the shaft, where H is the total height measured from the top of the panel to the top of the shaft.

3. Wind loads shall be computed in accordance with AASHTO LRFD Article 15.8.2 considering surface conditions characterized as “Sparse Suburban”. The 50 year return period maximum wind velocity shall be determined from AASHTO LRFD Figure 15.8.2-1 is 100 mph for Western Washington and 80 mph for Eastern Washington.

4. Drilled shaft foundations shall be designed for earth pressure distributions as shown in AASHTO LRFD Figure 3.11.5.10-1 considering the following:
   a. Shaft depth, D1
      i. 2H:1V fore-slope and a flat backslope
      ii. Angle of internal friction = 32 degrees
      iii. Soil unit weight = 125pcf

iv. Corresponding $K_p = 1.5$
v. Corresponding $K_a = 0.28$

b. Shaft depth, D2
   i. 2H:1V fore-slope and a flat backslope
   ii. Angle of internal friction = 38 degrees
   iii. Soil unit weight = 125pcf
   iv. Corresponding $K_p = 2.3$
   v. Corresponding $K_a = 0.22$

c. The passive earth pressure distribution shall be assumed to start at the finished grade. However, the uppermost two feet of passive earth pressure shall be neglected, resulting in a trapezoidal passive earth pressure distribution.

d. In accordance with AASHTO LRFD Table 11.5.7-1 and Article 11.5.8, the resistance factor applied to the passive earth pressure shall be as follows:
   i. For the Strength Limit State, the resistance factor is taken as 0.75.
   ii. For the Extreme Event Limit State, the resistance factor is taken as 1.0.

The design criteria and Details for Type 11 Noise Barrier Walls are attached for immediate use.

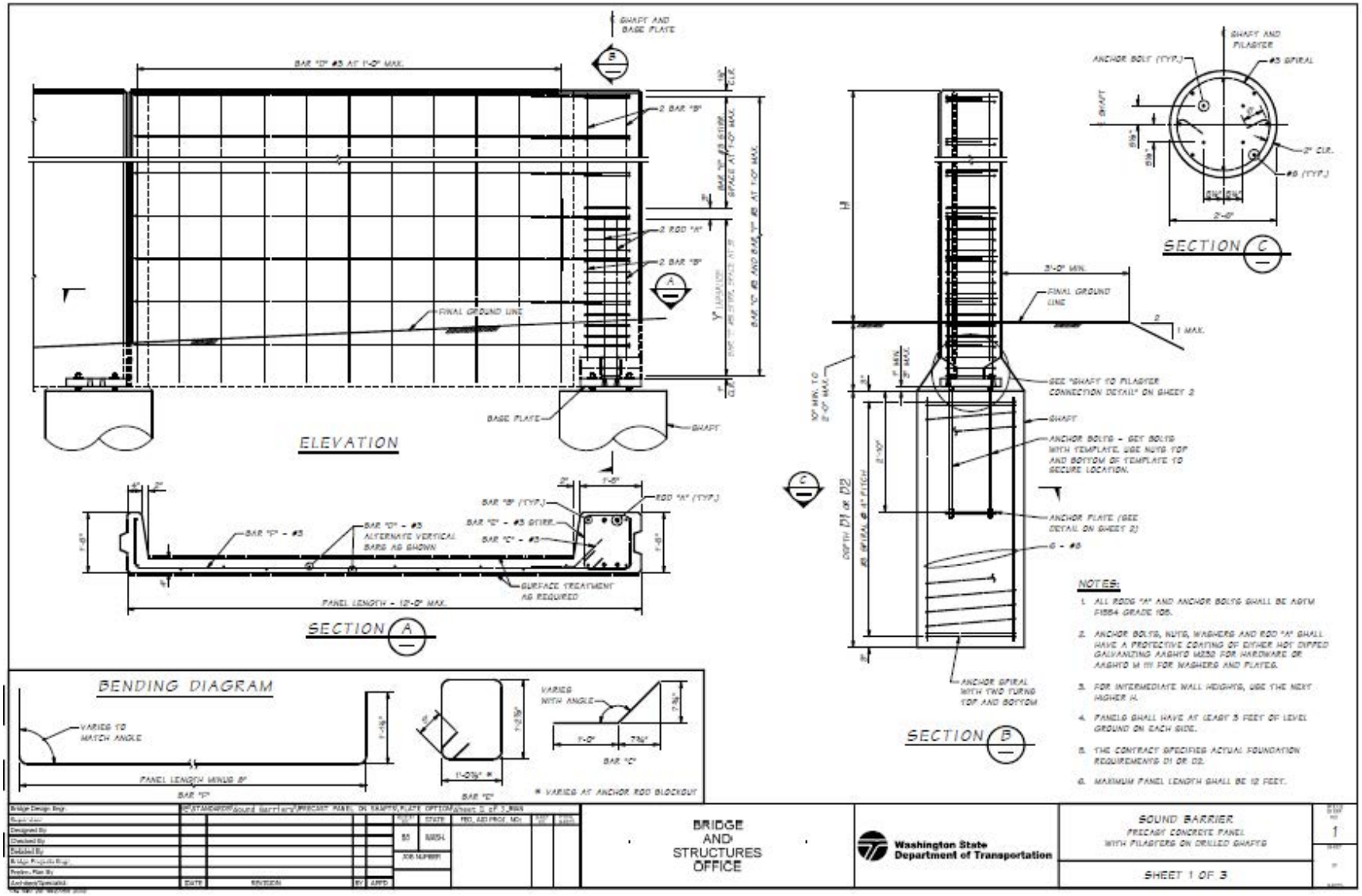
ELEVATION
SECTION A
SECTION B
SECTION C
BENDING DIAGRAM
NOTES:
1. ALL RODS "A" AND ANCHOR BOLTS SHALL BE ASTM F1554 GRADE 105.
2. ANCHOR BOLTS, NUTS, WASHERS AND ROD "A" SHALL HAVE A PROTECTIVE COATING OF EITHER HOT DIPPED GALVANIZING AASHTO M232 FOR HARDWARE OR AASHTO M 111 FOR WASHERS AND PLATES.
3. FOR INTERMEDIATE WALL HEIGHTS, USE THE NEXT HIGHER H.
4. PANELS SHALL HAVE AT LEAST 3 FEET OF LEVEL GROUND ON EACH SIDE.
5. THE CONTRACT SPECIFIES ACTUAL FOUNDATION REQUIREMENTS D1 OR D2.
6. MAXIMUM PANEL LENGTH SHALL BE 12 FEET.
BRIDGE AND STRUCTURES OFFICE
Washington State Department of Transportation
SOUND BARRIER
PRECAST CONCRETE PANEL WITH PILASTERS ON DRILLED SHAFTS
SHEET 1 OF 3

EXPOSED WALL HT. H	WESTERN WASHINGTON								
	SHAFT DEPTH		ROD "A" DIAM.	BAR "B"	LAPSPLICE Y	ANCHOR BOLT DIAM.	BASE PLATE		
	D1	D2					F	G	T
6'-0"	5'-6"	4'-6"	1/2"	4^#4	2'-3"	1/2"	11/8"	1 21/32"	1 1/2"
8'-0"	6'-6"	5'-3"	5/8"	4^#4	2'-9"	1/2"	11/8"	1 21/32"	1 1/2"
10'-0"	7'-3"	6'-0"	3/4"	4^#5	3'-0"	5/8"	11/8"	1 21/32"	1 1/2"
12'-0"	8'-3"	7'-0"	7/8"	4^#6	3'-9"	3/4"	11/8"	1 21/32"	1 1/2"
14'-0"	9'-0"	7'-6"	1"	4^#6	5'-9"	1"	13/8"	2"	2"
16'-0"	9'-9"	8'-3"	1 1/4"	4^#6	7'-9"	1 1/8"	13/8"	2"	2"
18'-0"	10'-6"	8'-9"	1 1/4" *	4^#6	9'-9"	1 1/4"	*	*	2 1/4"
20'-0"	11'-3"	9'-6"	SPECIAL DESIGN						

EXPOSED WALL HT. H	EASTERN WASHINGTON								
	SHAFT DEPTH		ROD "A" DIAM.	BAR "B"	LAPSPLICE Y	ANCHOR BOLT DIAM.	BASE PLATE		
	D1	D2					F	G	T
6'-0"	4'-9"	3'-9"	1/2"	4^#4	2'-3"	1/2"	11/8"	1 21/32"	1 1/2"
8'-0"	5'-3"	4'-6"	1/2"	4^#4	2'-3"	1/2"	11/8"	1 21/32"	1 1/2"
10'-0"	6'-3"	5'-3"	5/8"	4^#4	3'-9"	5/8"	11/8"	1 21/32"	1 1/2"
12'-0"	7'-6"	6'-3"	3/4"	4^#5	3'-9"	5/8"	11/8"	1 21/32"	1 1/2"
14'-0"	8'-0"	6'-9"	7/8"	4^#6	3'-9"	3/4"	11/8"	1 21/32"	1 1/2"
16'-0"	8'-9"	7'-3"	1"	4^#6	6'-0"	7/8"	13/8"	2"	2"
18'-0"	9'-6"	8'-0"	1 1/8"	4^#7	6'-0"	1"	13/8"	2"	2"
20'-0"	10'-0"	8'-6"	1 1/4"	4^#7	6'-3"	1 1/8"	13/8"	2"	2"

* ONLY ANCHOR BOLT OPTION FOR ROD "A" ALLOWED, WEDGE HEAD OPTION NOT ALLOWED

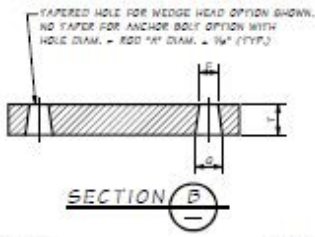

SECTION B

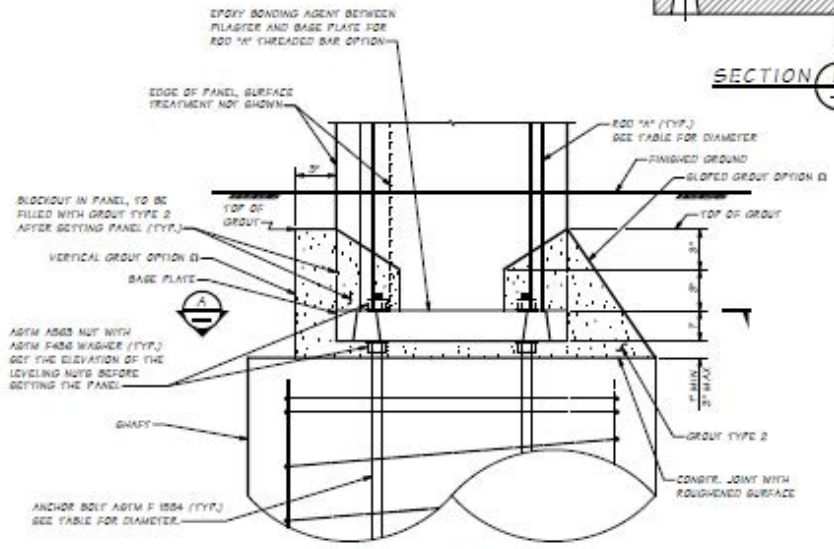

SHAFT TO PANEL CONNECTION DETAIL

D EITHER OPTION ACCEPTABLE TO GROUT BLOCKOUTS, ANCHOR BOLTS, BASE PLATE TO LIMITS SHOWN.

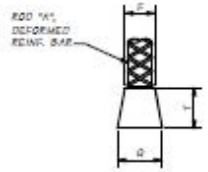

ROD "A" WEDGE HEAD OPTION

ASTM A 706 GR 60 AS ALLOWED PER TABLE, FOR HEIGHTS "H" ≤ 16' IN WEST AND HEIGHTS "H" ≤ 16' IN EAST

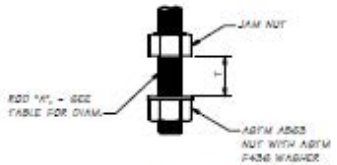

ROD "A" ANCHOR BOLT OPTION

ASTM F 1554 GR 105 FOR ALL HEIGHTS "H"

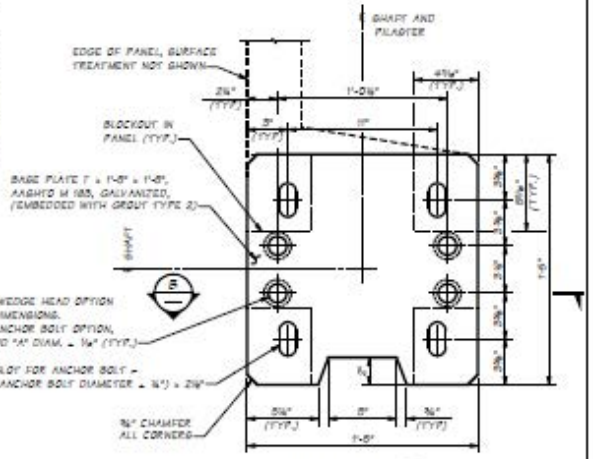

SECTION A

BASE PLATE, SHAFT NOT SHOWN FOR CLARITY

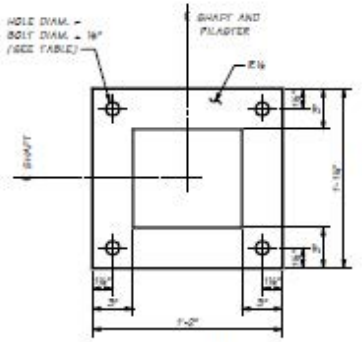

ANCHOR PLATE DETAIL

Bridge Design Engr.	STATEWIDE/Sound barriers/PRECAST PANEL ON SHAFTS/PLATE OPTION/Sheet 2 of 3.dgn				
Project Engr.					
Designed By					
Checked By					
Detailed By					
Bridge Projects Engr.					
Region Plan Br.					
Contracts/Specialist	DATE	REVISION	BY	APPD.	

	STATE	FED. AID PROJ. NO.	TOTAL SHTS.
53	5853A		
JOB NUMBER			

BRIDGE AND STRUCTURES OFFICE

Washington State Department of Transportation

SOUND BARRIER
PRECAST CONCRETE PANEL WITH PILASTERS ON DRILLED SHAFTS

2

SHEET 2 OF 3

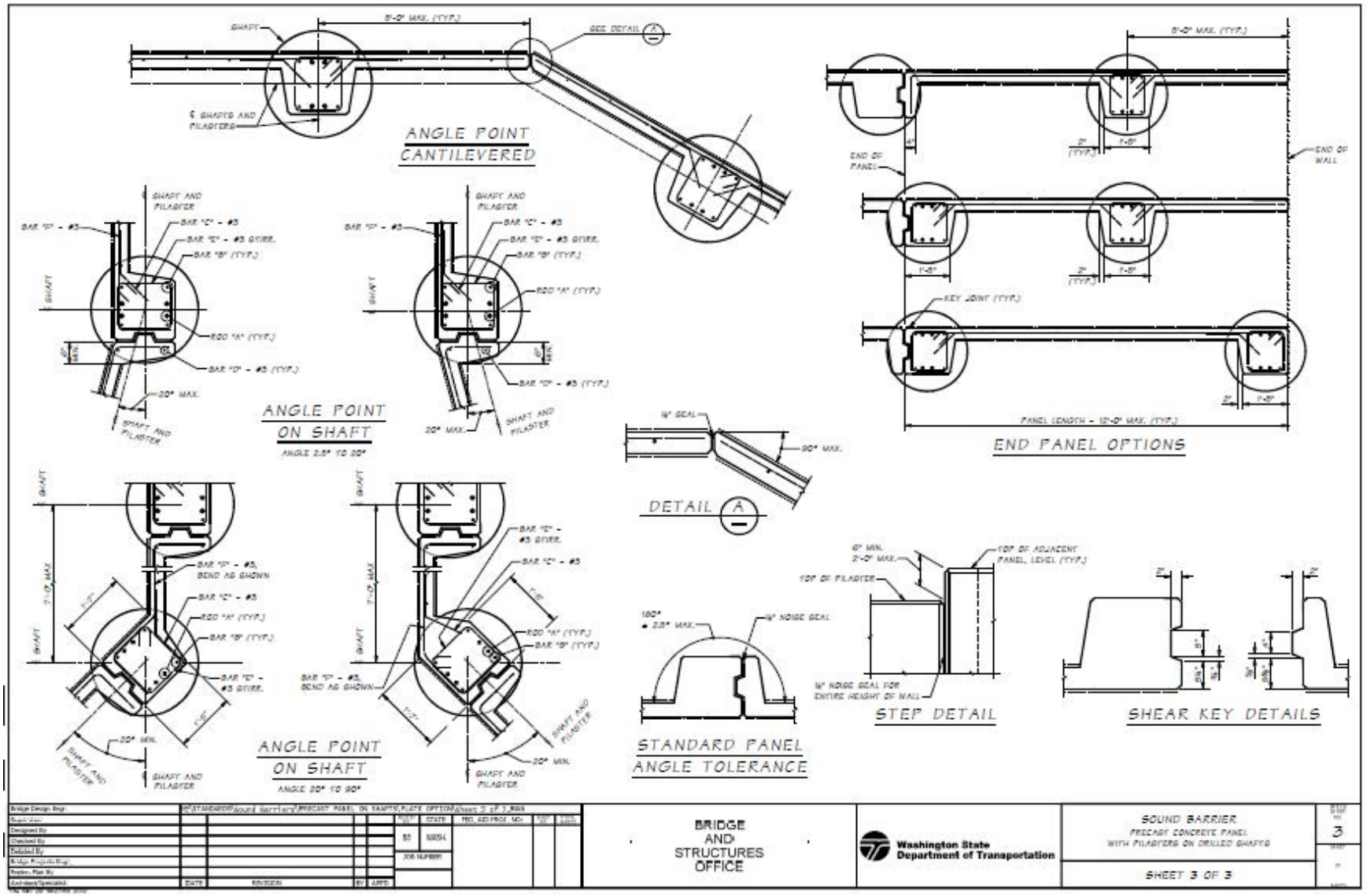
ANGLE POINT
CANTILEVERED
ANGLE POINT
ON SHAFT
ANGLE 2.5° TO 20°
ANGLE POINT
ON SHAFT
ANGLE 20° TO 90°
DETAIL A
STANDARD PANEL
ANGLE TOLERANCE
END PANEL OPTIONS
STEP DETAIL
SHEAR KEY DETAILS
BRIDGE
AND
STRUCTURES
OFFICE
Washington State
Department of Transportation
SOUND BARRIER
PRECAST CONCRETE PANEL
WITH FILABERS ON DRILLED SHAFTS
SHEET 3 OF 3