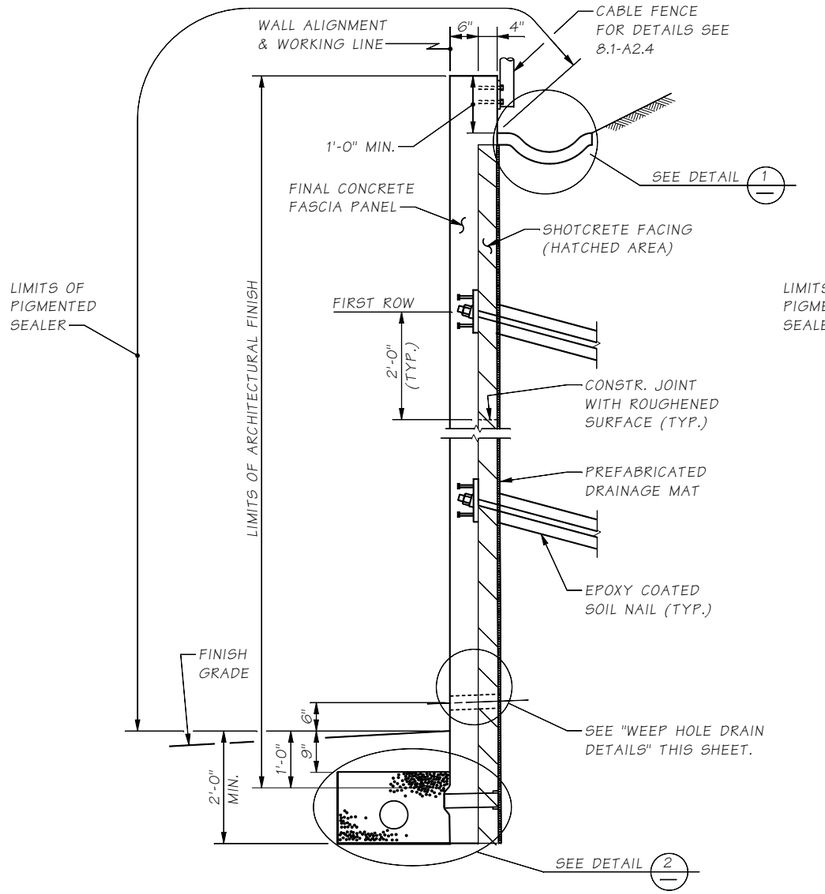

TYPICAL SECTION
EPOXY COATED SOIL NAIL WALL

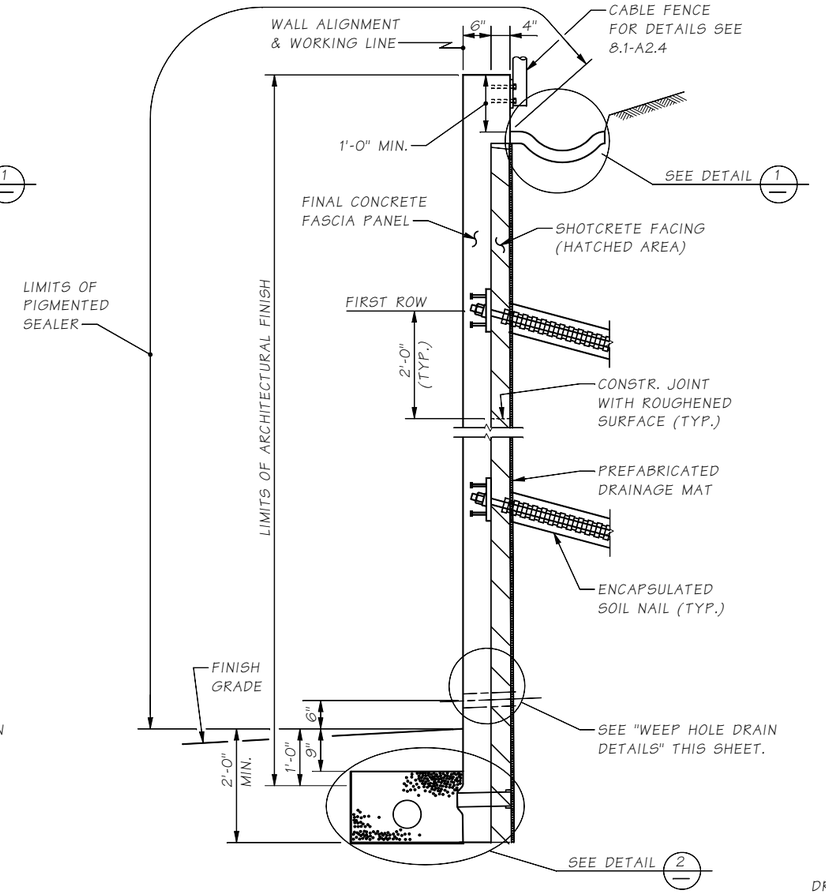

TYPICAL SECTION
ENCAPSULATED SOIL NAIL WALL

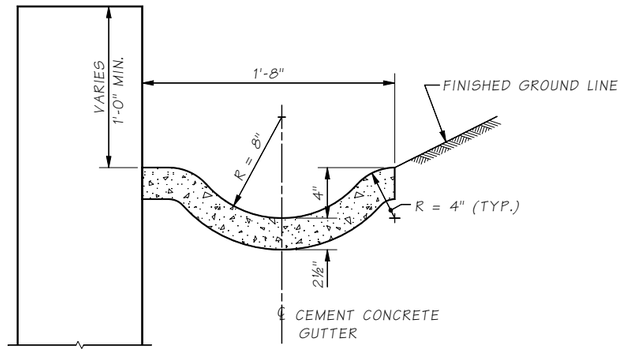

DETAIL 1
CEMENT CONCRETE GUTTER

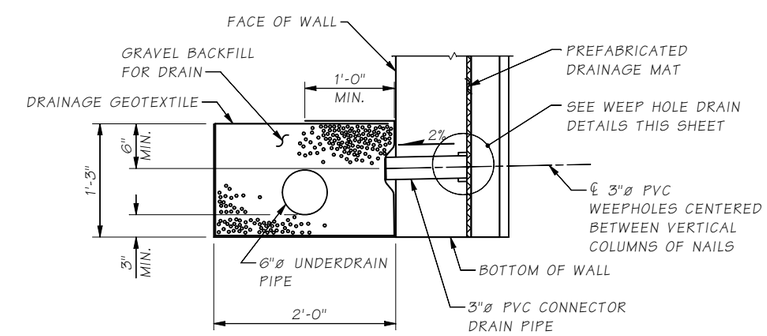

DETAIL 2
TYPICAL FABRIC DRAIN CONNECTION TO UNDERDRAIN PIPE

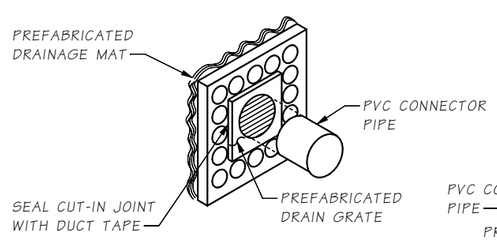

ISOMETRIC VIEW

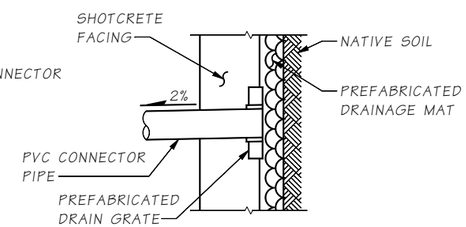

SECTIONAL VIEW

WEEP HOLE
DRAIN DETAILS

DRAIN GRATE INSTALLATION SHALL NOT DISRUPT PREFABRICATED DRAINAGE MAT

NOTE TO DESIGNER:

ABOVE GROUND WEEP HOLE IS OPTIONAL WHEN BELOW GROUND WEEP HOLE/UNDERDRAIN IS USED.

Bridge Design Engr.	M:\STANDARDS\Walls\SOIL NAIL TYP SECT.MAN				REGION NO.	STATE	FED. AID PROJ. NO.	SHEET NO.	TOTAL SHEETS
Supervisor					10	WASH.			
Designed By									
Checked By									
Detailed By					JOB NUMBER				
Bridge Projects Engr.									
Prelim. Plan By									
Architect/Specialist	DATE	REVISION	BY	APP'D					

BRIDGE AND STRUCTURES OFFICE

Washington State Department of Transportation

SOIL NAIL WALL SECTION
DETAILS 2 OF 4

BRIDGE SHEET NO.
SHEET
OF
SHEETS

Wed Jun 22 09:12:08 2016

SR ___ JOB NO. ___ SHEET ___

Last revised on : 2/26/2013

8.1-A4-2