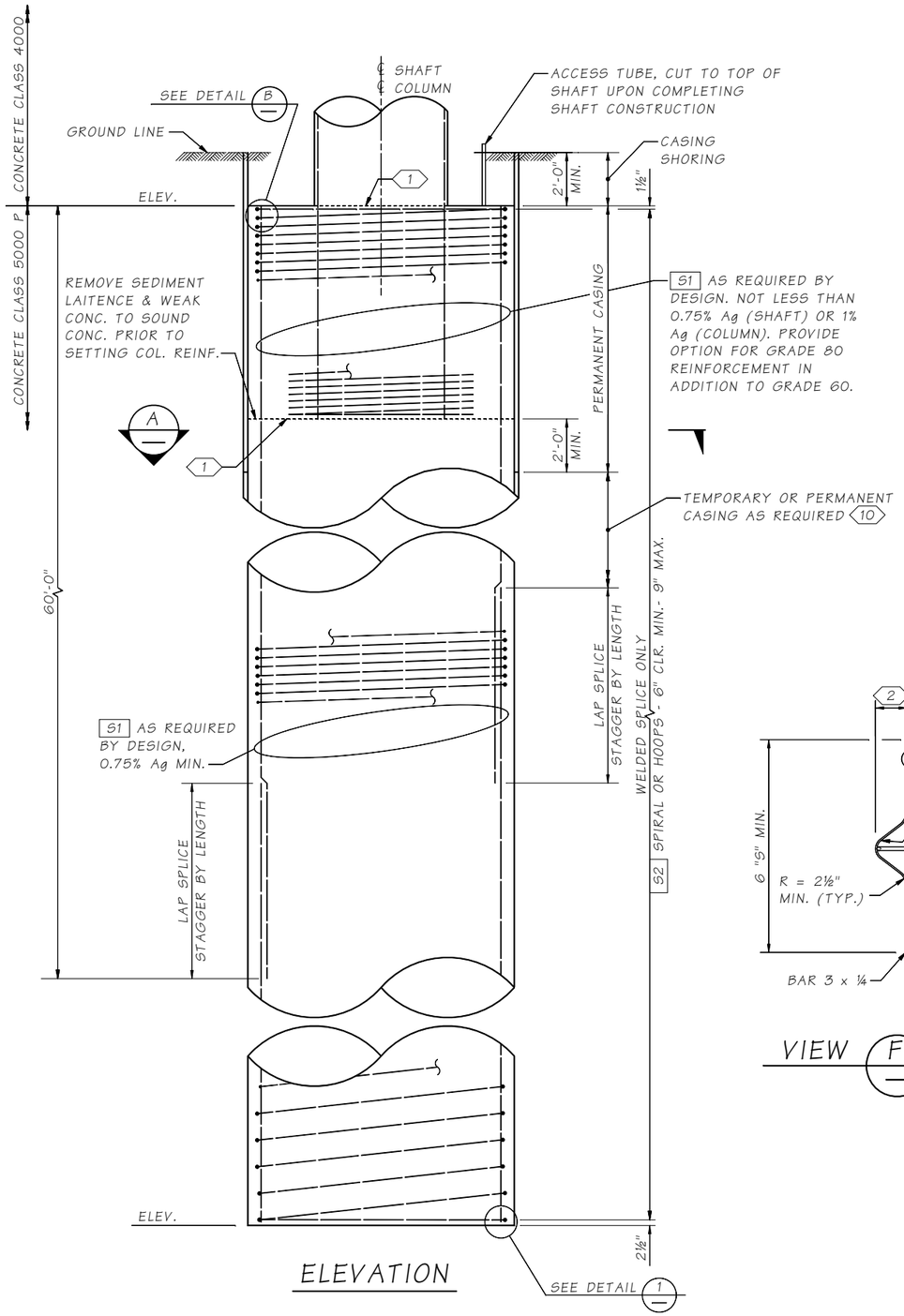

ELEVATION

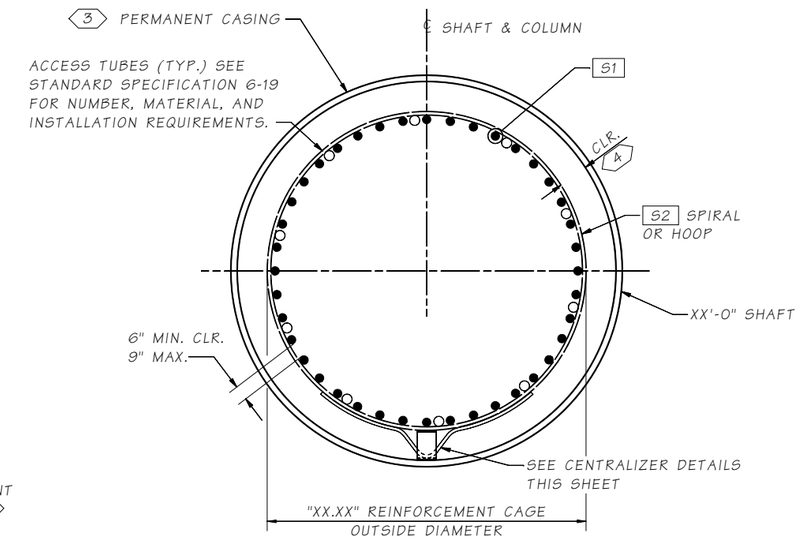

SECTION A

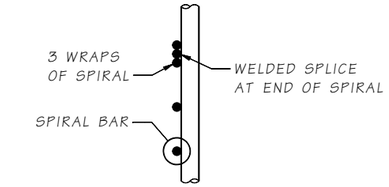

DETAIL 1

SPIRAL TERMINATION

SHAFT HOOP OPTIONS

	WELD DIMENSIONS (IN.)		
	S	E	LENGTH (L)
#7	7/16	¼	7
#8	½	¼	8
#9	9/16	5/16	8

SHAFT SPIRAL OPTIONS

	WELD DIMENSIONS (IN.)		
	S	E	LENGTH (L)
#4	¼	⅛	4
#5	5/16	3/16	6
#6	⅜	3/16	6

Designer Notes:
Butt welded hoops required if plastic hinging is expected.

Specify optional splice / mechanical coupler for S1 bar lengths 80'-0" or less. Bars are often available at 80'-0"

Mechanical coupler required for bar sizes #14 and #18

Reinforcement cage outside diameter shall be per BDM table 7.8.2-2

Geotech to provide "X" feet in Note 10. Remove Note 10 if not required.

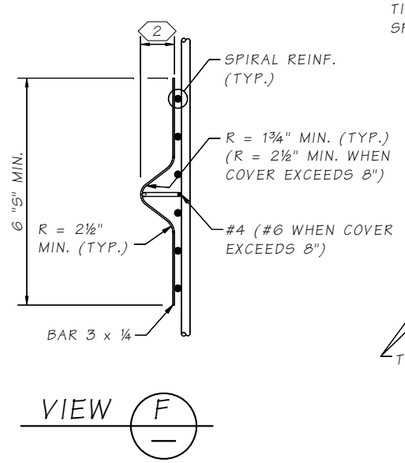

VIEW F

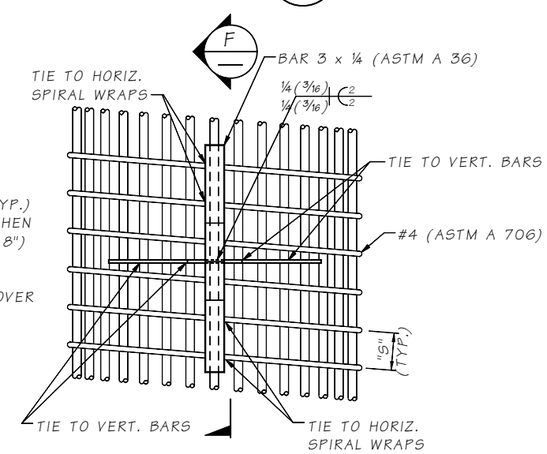

CENTRALIZER DETAIL

5 7 8 9

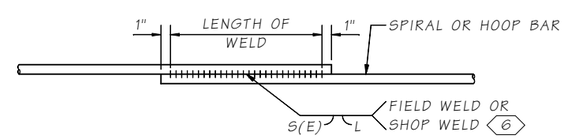

WELDED LAP SPLICE DETAIL

NOTES:

1. CONSTRUCTION JOINT WITH ROUGHENED SURFACE.
2. MINIMUM CONCRETE COVER MINUS ½".
3. SEE STD. SPEC. 6-19.3(3)b5 FOR PERMANENT SLIP CASING.
4. SEE STD. SPEC. 6-19.3(5)c. FOR MINIMUM CONCRETE COVER.
5. SEE STD. SPEC. 6-19.3(5)b FOR SPACING REQUIREMENTS.
6. WELDING SHALL MEET THE REQUIREMENTS OF STD. SPEC. 6-02.3(24)E FOR WELD DIMENSIONS, SEE SHAFT / HOOP OPTIONS TABLE THIS SHEET
7. CENTRALIZERS SHALL BE EPOXY COATED OR PAINTED WITH PAINT CONFORMING TO STANDARD SPECIFICATION 9-08.1(2)c OR 9-08.1(2)f AFTER FABRICATION.
8. EACH LEG SHALL BE TIED TO TWO (2) VERTICAL BAR AND TWO (2) SPIRAL WRAPS OR TWO (2) HOOPS.
9. CAGECASTER® REBAR CAGE SPACERS BY FOUNDATION TECHNOLOGIES MAY BE USED IN LIEU OF DETAIL SHOWN. SPACING REQUIREMENTS SHALL BE PER MANUFACTURER'S RECOMMENDATIONS. EACH LEG SHALL BE TIED TO A MINIMUM OF TWO (2) SIPRAL WRAPS OR HOOPS.
10. EXCAVATION IN ADVANCE OF THE CASING TIP SHALL NOT EXCEED "X" FEET.

LAST REVISED: 04/21/2020

SHEET ____ JOB NO. ____ SR ____

7.8.2-1

Bridge Design Engr.	M:\STANDARDS\Shafts and Columns\Working and New Versions\7.8.2-1_TYPICAL SHAFT DETAILS.MAN			
Supervisor				
Designed By				
Checked By				
Detailed By				
Bridge Projects Engr.				
Prelim. Plan By				
Architect/Specialist	DATE	REVISION	BY	APP'D

Fri Aug 07 13:04:47 2020

REGION NO.	STATE	FED. AID PROJ. NO.	SHEET NO.	TOTAL SHEETS
10	WASH.			
JOB NUMBER				

BRIDGE AND STRUCTURES OFFICE

Washington State Department of Transportation

TYPICAL SHAFT DETAILS

BRIDGE SHEET NO.

SHEET OF SHEETS