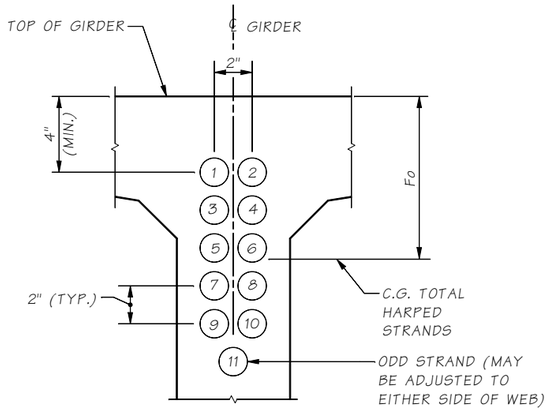


## STRAND PATTERN AT GIRDER END

HARPED STRAND LOCATION SEQUENCE SHALL BE AS SHOWN (1), (2) ETC.

## GIRDER SCHEDULE

DIMENSION "A" AT ℄ BEARINGS = BASED ON GIRDER DEFLECTION = "D" AT TIME OF SLAB PLACEMENT (120 DAYS)

| SPAN | GIRDER | END 1 TYPE | END 2 TYPE | L | LL | LT | θ1 (DEG.) | θ2 (DEG.) | P1 | P2 | PLAN LENGTH (ALONG GIRDER GRADE) | MIN. CONC. COMP. STRENGTH @ FINAL F'C (KSI) | MIN. CONC. COMP. STRENGTH @ RELEASE F'CI (KSI) | HARPED NO. OF STRANDS | HARPED JACKING FORCE (KIPS) | STRAIGHT NO. OF STRANDS | STRAIGHT JACKING FORCE (KIPS) | TEMPORARY NO. OF STRANDS | TEMPORARY JACKING FORCE (KIPS) | LOCATION OF C.G. STRANDS E | LOCATION OF C.G. STRANDS F℄ | LOCATION OF C.G. STRANDS Fb | LOCATION OF C.G. STRANDS Fo | C | D @ 40 DAYS | D @ 120 DAYS | Ld |
|---|---|---|---|---|---|---|---|---|---|---|---|---|---|---|---|---|---|---|---|---|---|---|---|---|---|---|---|
| - | - | - | - | - | - | - | - | - | - | - | - | - | - | - | - | - | - | - | - | - | - | - | - | - | - | - | - |
| - | - | - | - | - | - | - | - | - | - | - | - | - | - | - | - | - | - | - | - | - | - | - | - | - | - | - | - |

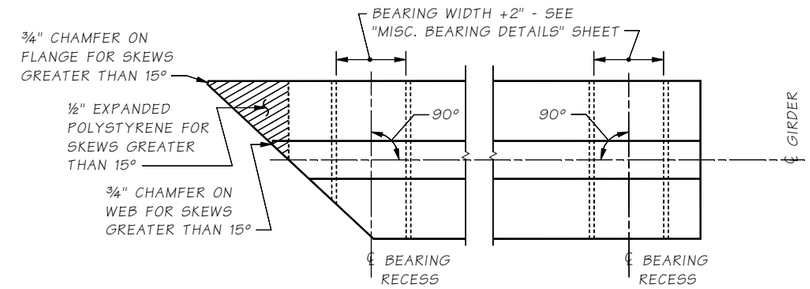


## PLAN BEARING RECESS AND BOTTOM FLANGE SPALL PROTECTION

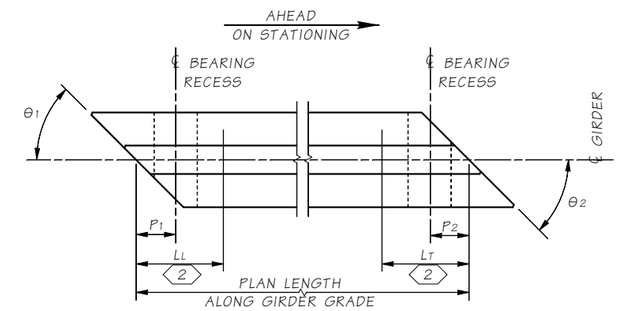


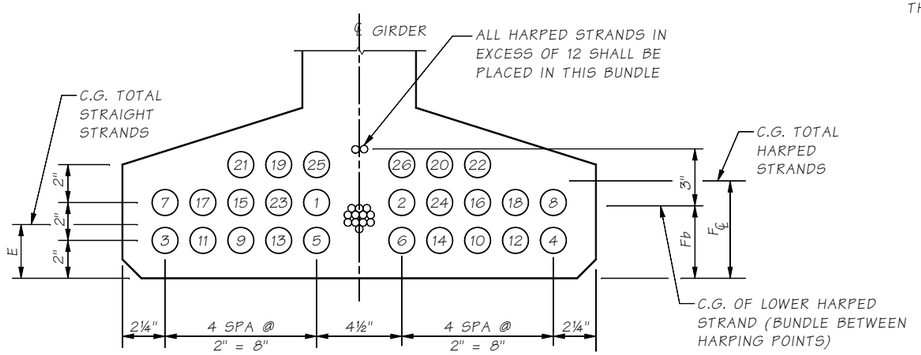


## STRAND PATTERN AT ℄ SPAN

STRAIGHT STRAND LOCATION SEQUENCE SHALL BE AS SHOWN (1), (2) ETC.

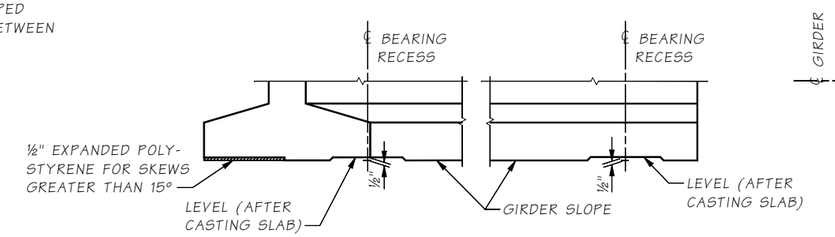


## ELEVATION

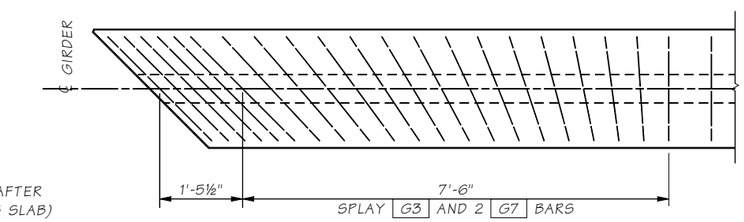


## TRANSVERSE REINFORCING SKEWED ENDS

ONLY TRANSVERSE REINF. SHOWN

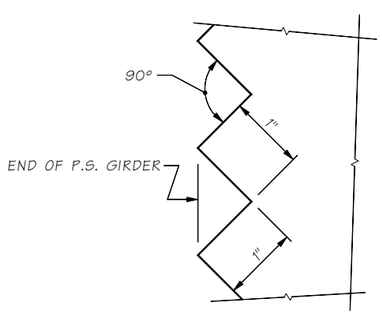


## SAWTOOTH DETAILS

1

NOTE:
Dimensions shall be shown in Imperial units to the nearest 1/8th inch.

The number of harped strands should not exceed ½ of the number of straight strands.

## NOTES:

1. SAWTEETH ARE FULL WIDTH - USE SAWTOOTH KEYS FROM BOTTOM OF BOTTOM FLANGE TO BOTTOM OF LOWEST HARPED STRAND AS WELL AS TOP FLANGE ADJACENT TO HARPED STRANDS AS SHOWN IN VIEW B - GIRDER DETAILS 1 OF 3
2. LL AND LT ARE SHIPPING SUPPORT LOCATIONS AT LEADING AND TRAILING ENDS, RESPECTIVELY.

| | | | | | | | | | |
|---|---|---|---|---|---|---|---|---|---|
| Bridge Design Engr. | M:\STANDARDS\Girders\W\W74G\W74G2.man | | | | REGION NO. | STATE | FED. AID PROJ. NO. | SHEET NO. | TOTAL SHEETS |
| Supervisor | | | | | 10 | WASH. | | | |
| Designed By | | | | | JOB NUMBER | | | | |
| Checked By | | | | | | | | | |
| Detailed By | | | | | | | | | |
| Bridge Projects Engr. | | | | | | | | | |
| Prelim. Plan By | | | | | | | | | |
| Architect/Specialist | DATE | REVISION | BY | APP'D | | | | | |

BRIDGE AND STRUCTURES OFFICE

Washington State Department of Transportation

STANDARD PRESTRESSED CONCRETE GIRDERS

W74G GIRDER DETAILS 2 OF 3

BRIDGE SHEET NO.

SHEET OF SHEETS

Tue Jul 07 15:32:11 2020

Last revised: 07/07/2020

SR 5.6-A3-9 JOB NO. SHEET