KEYSTONE CENTER

SEATTLE, SR 520

PROPOSAL K - TUNNELS AT EAST MONTLAKE AND THE ARBORETUM

CONCEPTUAL DESIGN AND COST ESTIMATE
PART 1 - REPORT

MARCH 17, 2008

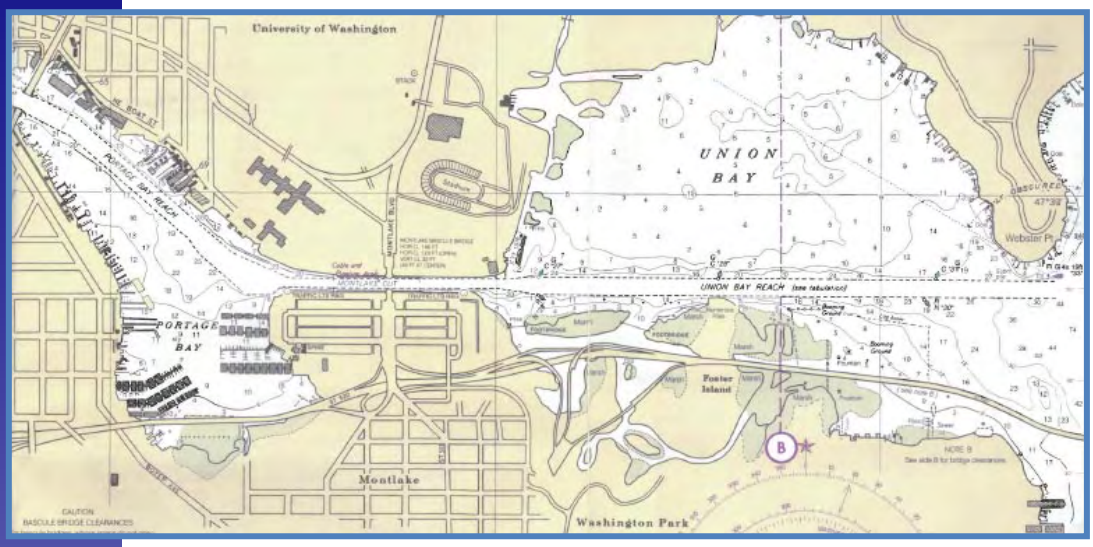

Prepared for:
The Keystone Center
1580 Lincoln Street, Suite 1080
Denver, CO 80203

Prepared by:

Ocean and Coastal Consultants, Inc.
35 Corporate Drive, Suite 1200
Trumbull, CT 06611
Tel: (203) 268-5007 Fax: (203) 268-8821
www.ocean-coastal.com
OCC 207077

KEYSTONE CENTER

SEATTLE, SR 520

PROPOSAL K - TUNNELS AT EAST MONTLAKE AND THE ARBORETUM

CONCEPTUAL DESIGN AND COST ESTIMATE PART 1 - REPORT

MARCH 17, 2008

Report no.	P-067119-R-9
Issue no.	1
Date of issue	2008-03-17
Prepared	CPM, FMLU
Checked	STWH
Approved	CPM, STWH

EXECUTIVE SUMMARY

The report describes the investigation carried out for the tunnel components of "Proposal K". The proposal assumes an interchange connection from the main road, just east of Montlake, to the University area routed in tunnel under the navigation channel east of Montlake Cut. It further includes a tunnel for the main road along the Arboretum.

Initially, a number of variations of principal construction methods which may be applied to the construction of the tunnel at Montlake with minimum environmental impacts have been considered. It was concluded that construction as an Immersed Tunnel is preferable.

The tunnel at the Arboretum is assumed constructed as a Cut & Cover tunnel, similar to the scheme described for the previous Proposal G.

The design features and construction of the two tunnels are described on a Conceptual Design level with reference to figures contained in the separate Part 2 of the submission. The construction time schedule for the tunnel at Montlake shows that it will be possible to carry out the offshore construction within the prescribed environmental window for in-water work.

Special concerns have been raised by NOAA with regard to adverse impact on aquatic environment from the work carried out offshore, considering the salmon migration in and out of Lake Washington. For an immersed tunnel, environmental effects will mainly be due to the dredging and this activity has therefore been subject to special focus in the report. The possible adverse impacts due to sediment spillage and the possibilities for applying various mitigation measures have been discussed.

Based on quantities extracted from the design drawings and experience with the assumed method, a cost estimate has been developed for the Montlake Tunnel. The estimated Base Costs of the tunnel, including the North Approach Ramp, is $479,000,000.

For the Arboretum Tunnel including West and East Approach Ramps and for the ramps to Lake Washington Boulevard, the costs have been estimated on the background of the unit area costs derived from the earlier investigation of Proposal G. The estimated Base Costs amount to $1,302,000,000 and $66,000,000 respectively.

The total Base Costs amounting to $1,847,000,000 does not include allowances for price escalation up to the year of expenditure or uncertainty assumptions or risks. It is estimated that the Final Costs, including these allowances, amount to $2,770,000,000.

TABLE OF CONTENTS

EXECUTIVE SUMMARY i
1.0 INTRODUCTION 1
1.1 BACKGROUND 1
1.2 SCOPE 1
1.2.1 Purpose 1
1.2.2 Interface Boundaries 2
1.2.2 Approach 2
2.0 ALTERNATIVE TUNNEL CONSTRUCTION METHODS 3
2.1 GENERAL 3
2.1.1 Alignment Constraints 3
2.1.2 Alternative methods 3
2.2 METHODS BASED ON EXCAVATION FROM ABOVE GROUND 4
2.2.1 Immersed Tube Tunnel 4
2.2.2 Cut & Cover Tunnel 6
2.2.3 The Caisson method 7
2.3 METHODS BASED ON EXCAVATION FROM UNDERGROUND 7
2.3.1 Sequential Excavation method 8
2.3.2 Sequential Excavation with ground stabilization/ improvement 9
2.3.3 Bored Tunnel 10
2.3.4 Box Jacking method 11
2.3.5 Construction within a steel pile envelope 12
2.4 COMPARISON 13
3.0 DESIGN & CONSTRUCTION 15
3.1 GENERAL 15
3.2 THE TUNNEL AT MONTLAKE 15
3.2.1 General Lay-out and Alignment 15
3.2.2 Ground Conditions and Foundation 15
3.2.3 Tunnel Cross Section 16
3.2.4 Tunnel Elements 16
3.2.5 Plans and Sections along the Alignment 17

3.2.6 Mechanical and Electrical installations 17
3.2.7 ITS System 18
3.2.8 Main Construction Stages 18
3.2.9 Construction Time Schedule 19
3.3 THE TUNNEL AT THE ARBORETUM 19
3.3.1 General Lay-out and Alignment 19
3.3.2 Ground Conditions and Foundation 20
3.3.3 Tunnel Cross Section 20
3.3.4 Plans and Sections along the Alignment 20
3.3.5 Tunnel Installations 21
3.3.6 Construction 21
3.3.7 Construction Time Schedule 21
3.4 ENVIRONMENTAL ASPECTS 21
3.4.1 General 21
3.4.2 Air Quality 22
3.4.3 Discharge of water 22
3.5 REFERENCES 22
4.0 IMPACT ON AQUATIC ENVIRONMENT 23
4.1 GENERAL 23
4.2 EXISTING CONDITIONS 23
4.2.1 Geology 23
4.2.2 Wetlands 24
4.3 POSSIBLE IMPACT DUE TO DREDGING 25
4.3.1 General 25
4.3.2 Dredging Equipment 25
4.3.3 Dredging Impacts 27
4.3.4 Suspended Sediment 27
4.3.5 Sedimentation 29
4.3.6 Control of Sediment Spillage 30
4.3.7 Evaluation of Impact 30
4.4 MITIGATION 30
4.4.1 General 30

4.4.2 Silt Curtains 31
4.4.3 Disposal or beneficial use of dredged Sediment 31
4.4.4 Opportunity to restore or establish Habitat 32
4.4.5 Other Mitigation Opportunities 32
4.5 SEDIMENTATION MODELS 33
4.6 REFERENCES 34
5.0 COST ESTIMATES 36
5.1 GENERAL 36
5.2 BASE COSTS OF TUNNEL AT MONTLAKE 36
5.2.1 Approach 36
5.2.2 Results 36
5.3 BASE COSTS OF TUNNEL AT THE ARBORETUM 37
5.3.1 Approach 37
5.3.2 Results 38
5.4 TOTAL COSTS 39
5.4.1 General 39
5.4.2 Results including Price Escalation and Risks 39

SEPARATE VOLUME: PART 2

LIST OF FIGURES

Figure 1 Proposal K. Tunnels at Montlake and Arboretum. General Lay-Out
Figure 2 Proposal K. Tunnel at Montlake. Geotechnical Profile
Figure 3 Proposal K. Tunnel at Montlake. Longitudinal Profile
Figure 4 Proposal K. Tunnel at Montlake. Cut & Cover Tunnel Structure. Typical Cross Section (Northern Part)
Figure 5 Proposal K. Tunnel at Montlake. Immersed Tunnel Structure. Typical Cross Section
Figure 6 Proposal K. Tunnel at Montlake. Pacific Street Interchange. Plan Northern Part
Figure 7 Proposal K. Tunnel at Montlake. Pacific Street Interchange. Plan Southern Part
Figure 8 Proposal K. Tunnel at Montlake. Pacific Street Interchange Cross Section St. 5+50 & St. 8+00
Figure 9 Proposal K. Tunnel at Montlake. Pacific Street Interchange Cross Section St. 11+00 & St. 14+00
Figure 10 Proposal K. Tunnel at Montlake. Pacific Street Interchange Cross Section St. 17+00 &St. 19+00
Figure 11 Proposal K. Tunnel at Montlake. Pacific Street Interchange Cross Section St. 21+00 &St. 23+00
Figure 12 Proposal K. Tunnel at Montlake. Pacific Street Interchange Cross Section St. 25+00 &St. 27+00
Figure 13 Proposal K. Tunnel at Montlake. General Construction Sequence, Stage 1-4
Figure 14 Proposal K. Tunnel at Montlake. General Construction Sequence, Stage 5-8
Figure 15 Proposal K. Tunnel at Montlake. Construction Sequence Land based Works, Part 1
Figure 16 Proposal K. Tunnel at Montlake. Construction Sequence Land based Works, Part 2
Figure 17 Proposal K. Tunnel at Montlake. Construction Sequence Marine Works, Part 1
Figure 18 Proposal K. Tunnel at Montlake. Construction Sequence Marine Works, Part 2
Figure 19 Proposal K. Tunnel at Arboretum. Longitudinal Profile
Figure 20 Proposal K. Tunnel at Arboretum. Cut & Cover Tunnel Structure (Western Part). Typical Cross Section.
Figure 21 Proposal K. Tunnel at Arboretum. Cut & Cover Tunnel Structure (Eastern Part). Typical Cross Section.
Figure 22 Proposal K. Tunnel at Arboretum. Main Road. Plan Western Part
Figure 23 Proposal K. Tunnel at Arboretum. Main Road. Plan Central Part
Figure 24 Proposal K. Tunnel at Arboretum. Main Road. Plan Eastern Part
Figure 25 Proposal K. Tunnel at Arboretum. Main Road Cross Section St. 72+00 and St. 83+50
Figure 24 Proposal K. Tunnel at Arboretum. Main Road Cross Section St. 95+00 and St. 97+00
Proposal K. Tunnel at Montlake. Time Schedule

1.0 INTRODUCTION

1.1 BACKGROUND

At the Mediation Meeting on 19 February 2008, it was decided to proceed with investigation and development of the "Proposal K" alternative, as outlined by a group of citizens representing the various local neighborhoods. The proposal is illustrated in Figure 1.1 and the project area relevant for tunnels is shown in Figure 1.2.

The proposal assumes that part of SR 520 main road at the Washington Park Arboretum is routed through a tunnel, and that the local interchange to the neighborhoods west of Lake Washington is situated just to the east of Montlake and connected to Pacific Street through a tunnel located to the east of Montlake Cut.

In the previous phase, the design and costs of a "Cut & Cover" tunnel at the Arboretum with various lengths had been studied at Conceptual Design level, and a rather thorough cost estimate was carried out. However, a tunnel east of the Montlake Cut had only been subjected to a very limited technical investigation and a cursory cost estimate.

Serious concerns were at the Mediation Meeting raised by NOAA with regard to the environmental impact of a tunnel at the Montlake Cut in particular in respect of adverse effects on the salmon migration to and from Lake Washington.

Further investigation of a tunnel at this location should, accordingly, have a strong focus on tunnel construction methods and mitigation measures which avoid any significant effects on the aquatic environment.

Figure 1.1. Layout of Proposal K (graphics by Seattle PI)

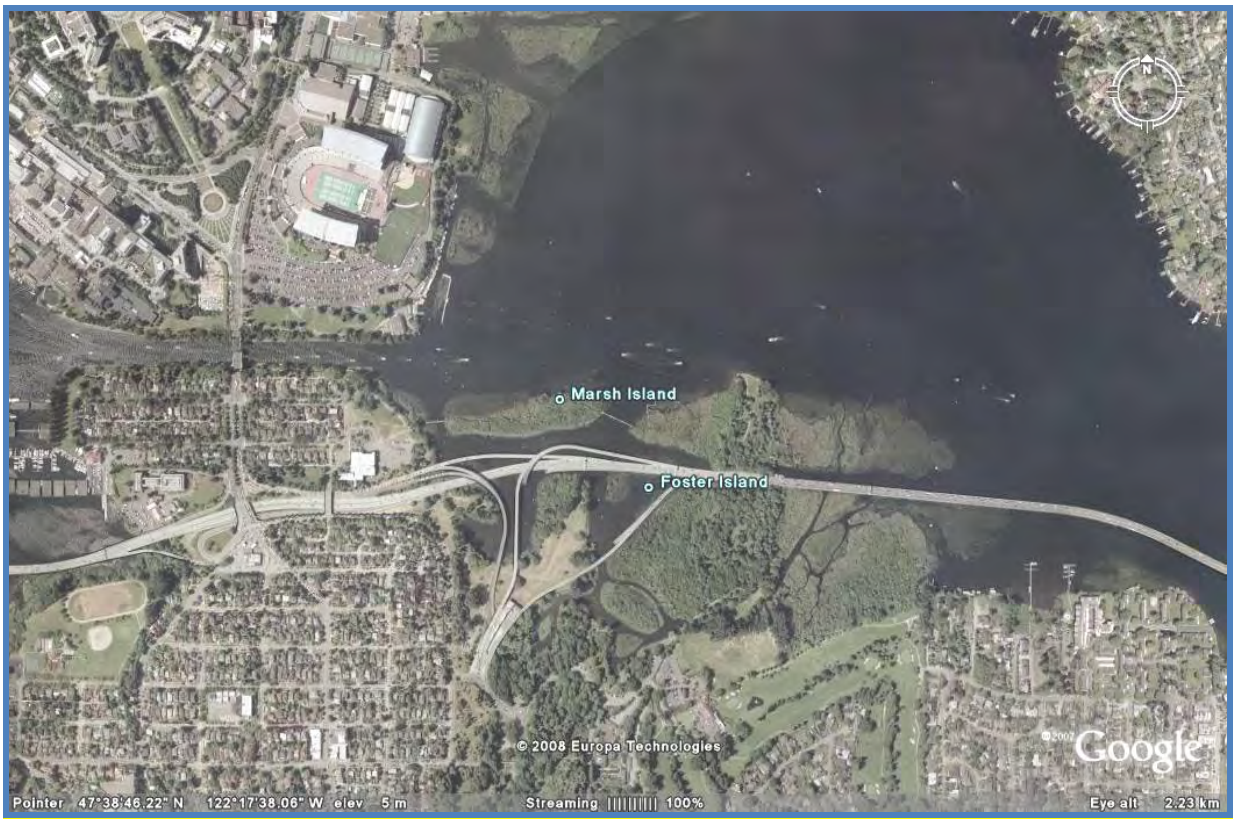

Figure 1.2. Project Area relevant to the tunnel parts of Proposal K

1.2 SCOPE

1.2.1 Purpose

The objective of the investigations of this report, according to the discussions and conclusions on the Mediation Meeting, is to be:

- Investigate possible principle construction methods for the tunnel components of Proposal K, considering technical, financial and environmental aspects;
- Develop the design of Proposal K, assuming what seems to the most feasible construction method;
- Develop mitigation measures for the assumed construction method for Proposal K to avoid adverse impact on the aquatic environment; and
- Prepare a cost estimate for the tunnel components of Proposal K.

With use of the results from the previous work with a similar Arboretum Tunnel of the previous Proposal G, the main emphasis is on the tunnel at Montlake Cut.

1.2.2 Interface Boundaries

The physical boundaries of OCC's investigation of Proposal K are:

- West: at the Montlake Boulevard Bridge;
- North: at the end of the tunnel ramp where it joins with the junction at Pacific Street;
- East: at the abutment for the first west approach bridge span at Foster Island; and
- South: at the connection of approach ramps to Lake Washington Boulevard.

Horizontal and vertical alignment drawings for Proposal K have been prepared by WSDOT.

1.2.2 Approach

Initially, a number of different principal methods which may be applied for constructing the tunnel at Montlake had been considered and evaluated as outlined in Section 2. The section concludes that construction by either the Immersed Tunnel Method or the Cut & Cover Method will be realistic with the given alignment, and the Immersed Tunnel Method is considered preferable.

Section 3 provides a description of the design and a possible construction scheme for an Immersed Tunnel at Montlake and a Cut & Cover Tunnel at the Arboretum, referring to the drawings, included in the separate volume "Part 2 - Figures" of this submittal. Section 3 further comments on the time schedules for the execution of tunnels.

The impacts on the aquatic environment due to the tunnel construction are, in particular, associated with the dredging of the tunnel trench. The environmental conditions, the possible impacts, and the possible measures for control and mitigation are explained in Section 4.

Based on quantities extracted from the design drawings and experience with the assumed method, a cost estimate has been developed for the Montlake Tunnel as described in Section 5. The knowledge of approximate costs per unit area gained from the relatively detailed estimate made during the previous phase (Proposal G) has been utilized to derive estimated costs of the Arboretum Tunnel and ramps to the West, East and South.

2.0 ALTERNATIVE TUNNEL CONSTRUCTION METHODS

2.1 GENERAL

2.1.1 Alignment Constraints

As demonstrated by WSDOT, the assumed location of the interchange just to the East of Montlake and the presence of a 30 feet deep navigation channel imply hard constraints for the alignment. In order to ensure that the tunnel crossing is below the bottom of the channel, a steep grade of 7% will be required, and it will also be necessary to depress the road area southwest of Husky Stadium, at the junction with Pacific Street and Montlake Boulevard.

The relatively high location of the alignment assumes that the tunnel is constructed either as a Cut & Cover Tunnel within temporary cofferdams or as an Immersed Tunnel. With the assumed internal clearance height in the tunnel, there will be a couple of feet from the top of the stone protection on the tunnel roof up to the deepest point of the channel and an additional 5 feet (approximate) to the bottom of the shipping channel profile specified on the navigation chart.

It is noted that the depth of the navigation channel of 30 feet appears excessive when in consideration of the limited drafts of the vessels, mainly barges and pleasure boats, which are using the channel. It is therefore recommended that the possibility of modifying the required depth is explored, in order to allow for a relaxation of the road grade.

2.1.2 Alternative methods

It is OCC's opinion from general experience at this stage that the most cost effective method for the tunnel construction would be one of the following two methods, assuming excavation is done from above ground level:

- Immersed Tube Tunnel method;
- Cut & Cover Tunnel method; and
- As a third alternative, the tunnel could also be constructed from above by use of:
    - The Caisson method

The characteristics and possible application of these methods are discussed in Section 2.2.

As dredging will have some interference with the shipping and/or the aquatic environment, a number of other methods for which the excavation is done underground have also been reviewed. These include:

- Sequential Excavation method;
- Sequential Excavation with ground stabilization/ improvement;
- Bored Tunnel method (using a TBM, i.e. "Tunnel Boring Machine");
- Box Jacking method; and
- Construction within a steel pile envelope.

The mentioned ground stabilization/improvement is done to create an arch effect in the soil above the tunnel or a pressure ring around the tunnel.

The characteristics and possible application of these methods are discussed in Section 2.3.

A survey comparing the alternative methods with regard to ability to fulfill alignment criteria, obstruction to the shipping channel, impact on the aquatic environment and wetlands as well as expected cost level and risks is given in Section 2.4.

2.2 METHODS BASED ON EXCAVATION FROM ABOVE GROUND

2.2.1 Immersed Tube Tunnel

The primary scheme described in this report assumes that the Montlake Tunnel under the channel will be constructed as an Immersed Tube Tunnel. The method implies that the tunnel structure is constructed at a remote location, as it is made up by 300 to 600 foot long elements having the full width of the cross section.

In the United States and Japan, the elements are traditionally made with a steel shell, constructed at a shipyard. Concrete is cast for the base slab, and after closing of the ends with bulkheads, the elements are launched from a slipway or dry dock and towed to another location for final construction while moored to a quay.

In Europe and other parts of the world, the elements are usually constructed as reinforced concrete structures in a purpose-made dry dock located in the vicinity of the tunnel location.

The final weight of the element slabs and walls is adjusted in the design, so that it will float with a small freeboard. The tunnel element is towed to the tunnel location, immersed by filling of temporary water ballast tanks, and joined to the previous element. After casting of permanent ballast concrete in the bottom of the element, the water ballast tanks are removed.

The tunnel is located in a dredged trench, and the permanent foundation is either on a gravel bed or by a sand layer jetted into the gap between the trench bottom and the bottom of the element. Sand backfill is placed alongside the tunnel, and a layer of stones on the top will protect the roof against accidentally dropped anchors.

For an Immersed Tunnel made as a steel shell/concrete composite structure, the cross section will typically have a binocular shape, whereas for an Immersed Tunnel constructed as a reinforced concrete structure, the shape will be rectangular. The two principles are illustrated in Figure 2.1.

As the rectangular shape is fitting more closely to the traffic clearance envelope, the height of the tunnel will be less, implying a higher level of the road alignment and less dredging. For the actual project, a reinforced concrete tunnel it is therefore considered advantageous to the binocular and has therefore been assumed.

Figure 2.2 shows an example of concrete tunnel elements in a dry dock, prior to their fitting out for floating transport and immersion. Figure 2.3 shows a tunnel element being towed out to its final position. In the example, the towing is done by tug boats. In case the dry dock is very close to the tunnel site, it may also be performed by warping.

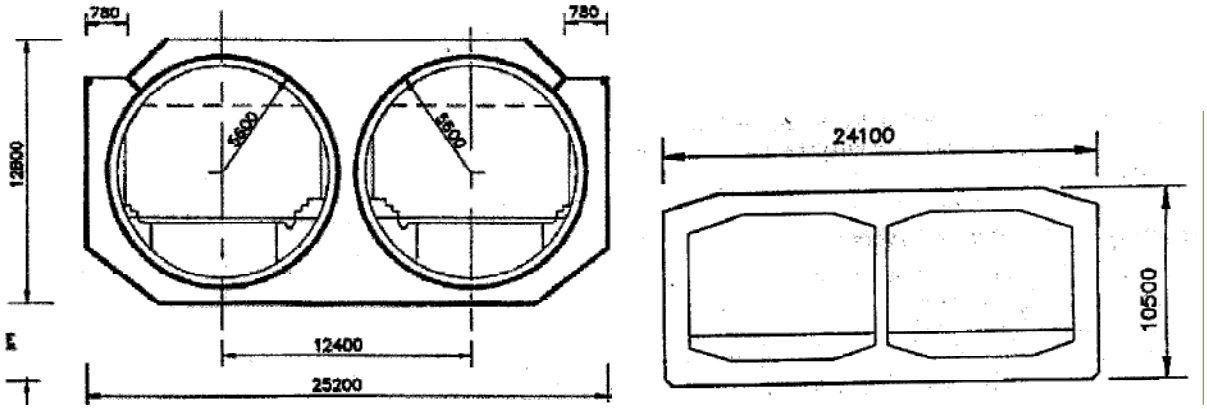

Figure 2.1. Cross sections for Steel Shell (left) and Concrete Tunnels (right)

Figure 2.2. Immersed Tunnel Elements in Dry Dock (Limerick, Ireland)

Figure 2.3. Towing of tunnel element to the final location (Øresund, Denmark/Sweden)

2.2.2 Cut & Cover Tunnel

The Montlake Tunnel across the channel could also be constructed by the "Cut & Cover" method, i.e. it is concreted at its final location in an open excavation and afterwards covered with backfilled soil. This method is considered as the most cost effective and appropriate for the land based tunnel sections.

In order to minimize the footprint during construction, the excavation for the tunnel sections on land is made within vertical earth retaining walls made from steel sheet piles.

For the tunnel construction offshore, a temporary cofferdam enclosing the tunnel excavation along a certain stretch is initially established and dewatered. The cofferdam can be made by two parallel sheet pile walls or as sheet pile cells, as the space between the walls is filled with granular material.

As the navigation channel cannot be entirely blocked, the cofferdam and tunnel must be established as two halves, each extending about midway into the channel. If required, a full width channel to the present depths could be provided by additional dredging and temporary re-alignment of the channel.

For construction below the local ground water level, provisions should be made to ensure that the excavation is kept dry. Whereas inflow through the sides will be blocked by the retaining walls, a groundwater control system will normally be needed for lowering the ground water table to a safe level below the bottom of the excavation during the construction period.

The possible impact of the groundwater lowering in terms of the risk of ground settlement under nearby buildings should be investigated and mitigated if needed. A possible mitigation measure would be to re-inject groundwater between the cofferdam and impacted building.

A work area of about 30 feet would be needed around the cofferdam for work road, construction plant, preparation of reinforcement cages, stockpiles, sheds, etc.

The tunnel cross section will be rectangular, similar to concrete type Immersed Tube Tunnel.

Examples of Cut & Cover tunnel construction from a Cut & Cover section of the Limerick tunnel (Ireland) and from the Boston Central Artery project is shown in Figure 2.4.

Figure 2.4: Examples of Cut & Cover Tunnel construction (left: Limerick, right: Boston)

2.2.3 The Caisson method

The Caisson Method is a traditional method for sinking bridge foundation elements into the ground and there are also a few examples of tunnels (e.g. the Metro East Line in Amsterdam).

The principal method is illustrated in Figure 2.5. In case of a tunnel on land, the structure is built on ground level and lowered to its final position by excavation of the underlying soil by water jets, as the bottom end of the outer walls are formed as a cutting edge. Inflow of water is controlled by application of compressed air in the work chamber below the bottom slab, balancing the outside water pressure.

In case of a tunnel under a river or channel, the caisson can be constructed in a dry dock from where it is floated and immersed to the bottom. There are many examples of the method being used for bridge piers on water, but it has never been applied to tunnels off-shore, and joints between caissons will be difficult to construct. The method is consequently considered uncertain and risky. Working in compressed air is problematic from a Health & Safety point of view.

Compared to Cut & Cover construction, the method has the advantage that groundwater control by lowering of the groundwater table is avoided, which in some cases (e.g. with nearby buildings being very sensible to settlements) can be essential. Compared to the Immersed Tube Tunnel method, there will be no dredging. As for Cut & Cover construction, the navigation channel will be partly blocked over a period.

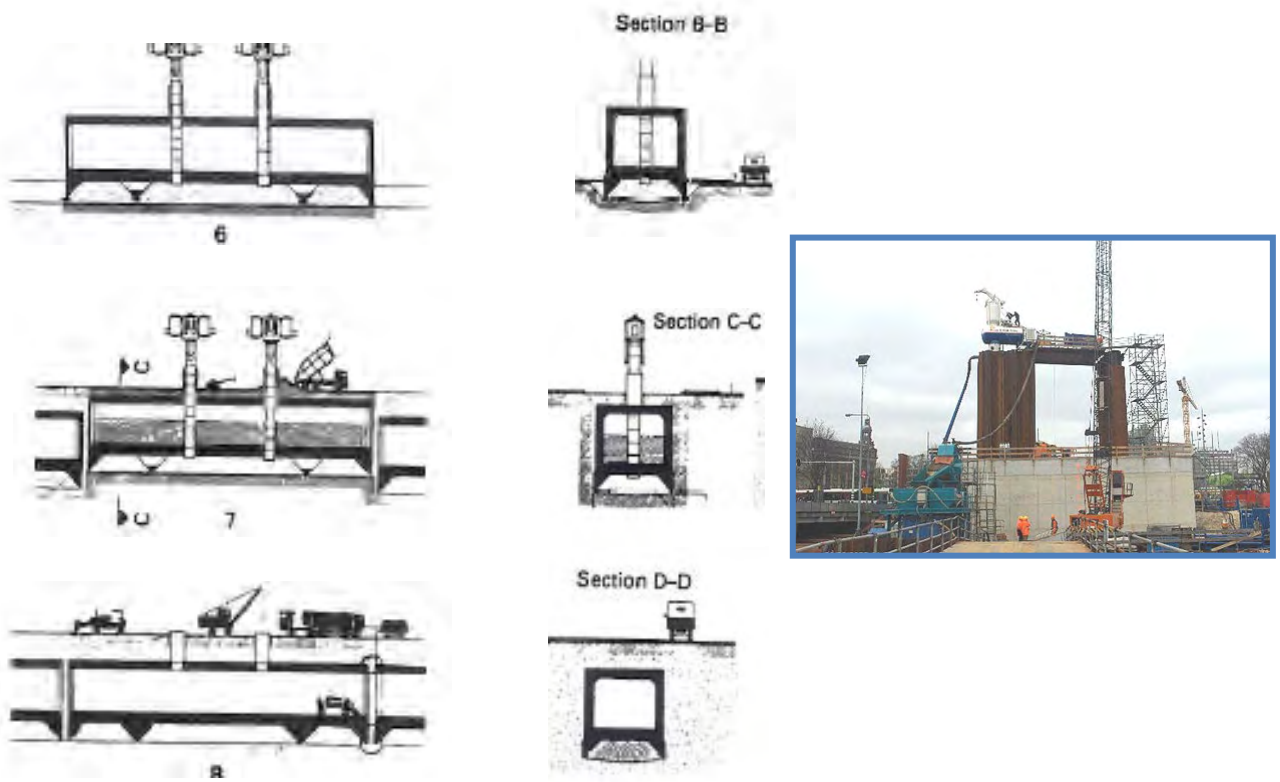

Figure 2.5: Tunnel construction by the Caisson Method (Amsterdam Metro, Holland)

2.3 METHODS BASED ON EXCAVATION FROM UNDERGROUND

2.3.1 Sequential Excavation method

Tunneling by sequential excavation is done using special equipment "road headers" or ordinary hydraulic excavators. The tunnel cross section is excavated in a number of partial sections excavated in sequence to maintain stability of the tunnel face and the tunnel roof at all times.

A temporary tunnel lining is normally made by sprayed-on concrete in steps following the excavation sequences. This lining for the construction stage will withstand the earth pressure but not the ground water pressure, and groundwater is therefore drained during construction. A final concrete lining withstanding the ground and water pressure is cast at the end.

Figure 2.6 shows an example of the method being used as well as the typical shape of the cross section. Due to the semicircular shape, the height of the tunnel will be somewhat larger than the rectangular clearance profile.

The Tunnel is constructed as two tubes with 2 lanes and shoulders in each. Each tunnel will have a width of up to about 65 feet. In order to ensure stability of the vault over the excavation, a minimum thickness of the soil layer above the tunnel is required. Without any additional soil stabilizing measures, it is estimated for the tunnel at Montlake that the thickness should at least correspond to the internal width of the tunnel.

The shape of the tunnel and the required thickness of the above lying soil imply that the road alignment under the channel would be up to approximately 72 feet lower than for the methods with excavation from above (dredging). Considering that the 7% maximum grade should not be exceeded, the method will not be compatible with the actual horizontal alignment.

Sequential excavation in glacial till and under ground water level/lake level will be more expensive and represents higher risks during construction than an Immersed Tunnel or a Cut & Cover Tunnel.

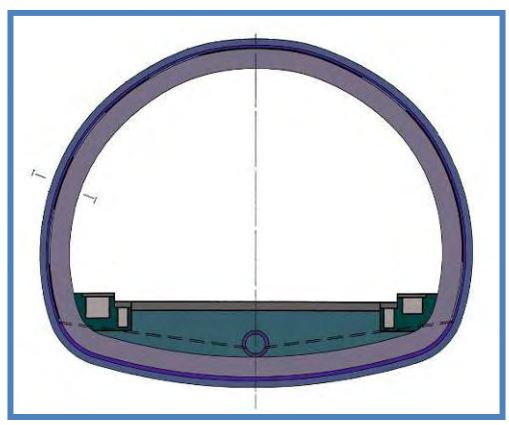

Figure 2.6: Example of sequential excavation (Sound Transit, Seattle) and typical cross section

2.3.2 Sequential Excavation with ground stabilization/improvement

The above mentioned rule regarding the minimum cover thickness can be reduced where special soil stabilizing measures are applied. These basically serve the function to create a load transferring arch or pressure ring by improving the soil characteristics. A continuous pattern of cylinders is formed by one of the following methods:

- Grouting the soil above the tunnel;
- Freezing the pore water of the soil above the tunnel; or
- Drilling and casting horizontal concrete piles.

In most cases such auxiliary tunneling measures are time consuming and costly. In case of a water table above the tunnel, the applied provision should reduce the permeability of the soil layers to a manageable level.

The measures for ground stabilization and ground water control can be applied from within the tunnel excavation or they can be applied from the surface ahead of tunneling. For the tunnel at Montlake, applying the soil improvement from inside will be preferable.

Examples of application of freezing are shown in Figure 2.7.

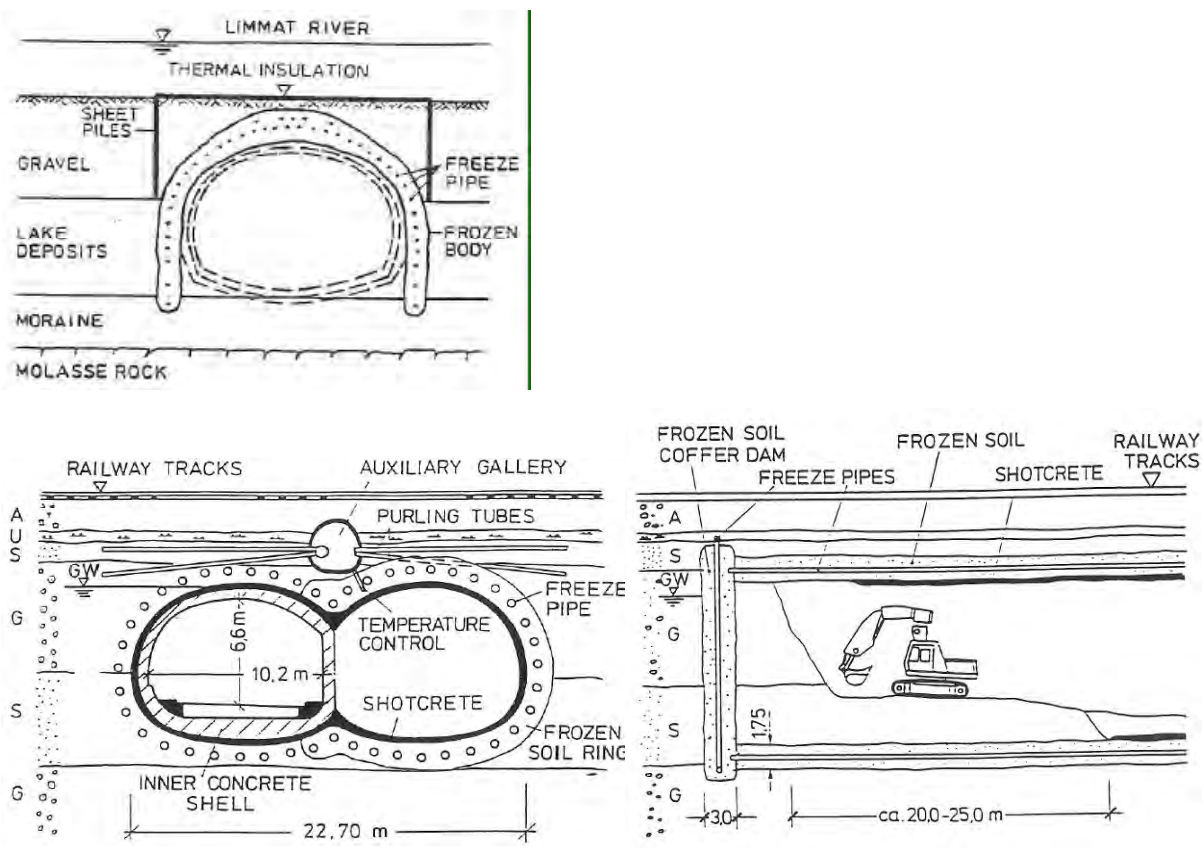

Figure 2.7: Examples of soil stabilization by freezing (top: Limmat Tunnel, Switzerland - crossing under a river, bottom: Fahrlach Tunnel, Mannheim, Germany - crossing under a railway line).

The minimum soil cover above the top of the tunnel lining utilizing freezing techniques can be reduced down to 10 feet. In case of the Montlake Tunnel, the vertical alignment under the channel would then be approximately 17 feet below the alignment shown for a Cut & Cover or Immersed Tunnel.

The construction work will be conducted from chambers within each shoreline.

An example of the use of horizontal concrete piles is a section of the Mount Baker Ridge Tunnel, Seattle. For this project, a pressure ring surrounding the excavation was created with 24 small diameter tunnels filled with concrete.

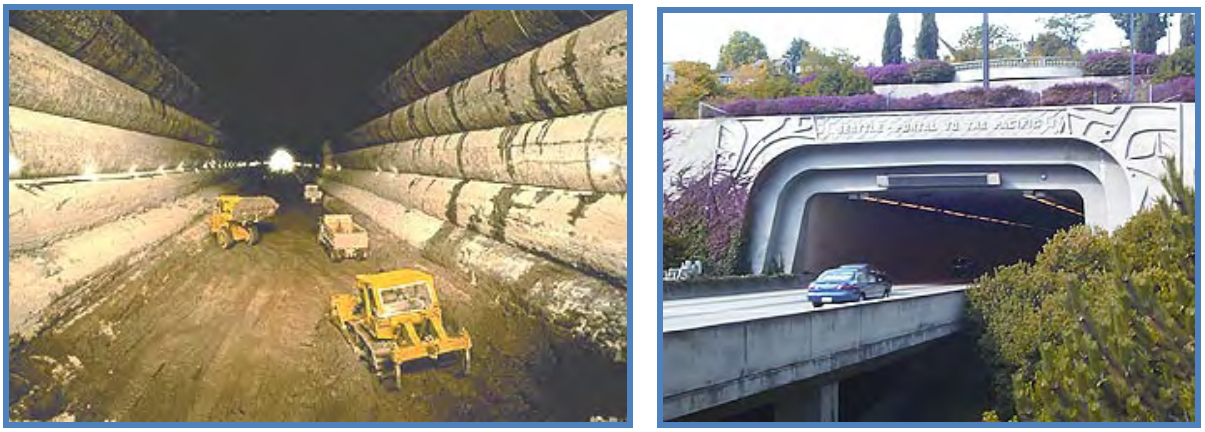

Figure 2.7: Example of soil stabilization by concreted horizontal piles (Mount Baker Ridge Tunnel)

2.3.3 Bored Tunnel

Boring the tunnel through the glacial till under the Montale Cut is not unprecedented. Bored tunnels in similar soil and ground water conditions have been done many places in the world including under ground water level and/or sea level.

The tunneling is done with a tunnel boring machine ("TBM"), which erects a permanent lining of prefabricated concrete segments, alternating with actual boring in sections of up to 2 meters. With the actual road configuration, the tunnel will be constructed as two tubes with intermediate cross passages for emergency escape (done by sequential excavation). Example of bored tunnel construction is shown in Figure 2.8.

The TBM starting and operation could be arranged within the work area East of Montlake. A staging area of around 200x300 feet would be required for assembly and start of the TBM. After start, the TBM could bore the first tube towards the university, where a reception chamber would be constructed. Here the TBM could be turned around so that it could then bore the second tube from the university back to the Montlake side.

The start-up cost for bored tunnels is relatively high due to the costs of purchasing the TBM (order of magnitude 25 - 50 M USD) and the facilities for operating the TBM. Therefore, bored tunnels are normally only used for longer tunnels (say, longer than 3,000 feet). In the present

case, the tunnel would be approximately 2x1500 feet, i.e. at the lower end of the normal economic range for a bored tunnel.

Bored tunnels will have a deeper alignment than other types of tunnels, typically at least a tunnel diameter below the ground surface or the surface of competent strata. In this case, it would imply that the alignment of the road surface under the channel would have to be about 75 feet lower that for the present alignment.

As for the sequential excavation technique, the distance may be reduced by special measures such as freezing. As an example, freezing was applied at some locations for special purposes for the tunnel under the Great Belt, Denmark.

Application of freezing could imply an alignment level under the channel of about 25 feet lower than for the present alignment.

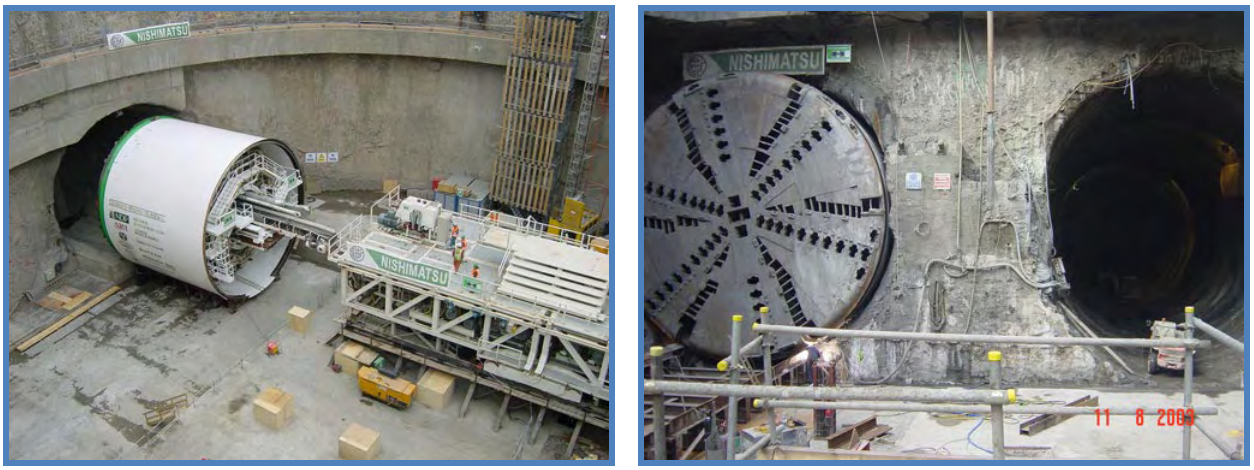

Figure 2.8: Example of a TBM bored tunnel (Dublin Port Tunnel, Ireland)

2.3.4 Box Jacking method

The Box Jacking method implies that segments of the full structural section of the tunnel is pushed through the soil by the use of a number of jacks, in parallel with excavation inside. A shield supports the face of the excavation at the front of the tunnel.

An example of the application of the method for the Boston Central Artery project is shown in Figure 2.9. Three large tunnels with a length of more than 800 feet were jacked under the fully operating railway. The project also involved ground freezing for stabilising poor soil strata during construction under the railway.

The use of tunnel jacking may be possible for the Montlake Tunnel, although the operations will be complicated by the high water pressure on the shield and the distinct horizontal curves of the road alignment. It is currently assumed that there would be at least about 12 feet of soil above the tunnel, whereby the vertical alignment under the channel needs to be lowered by approximately 8 feet.

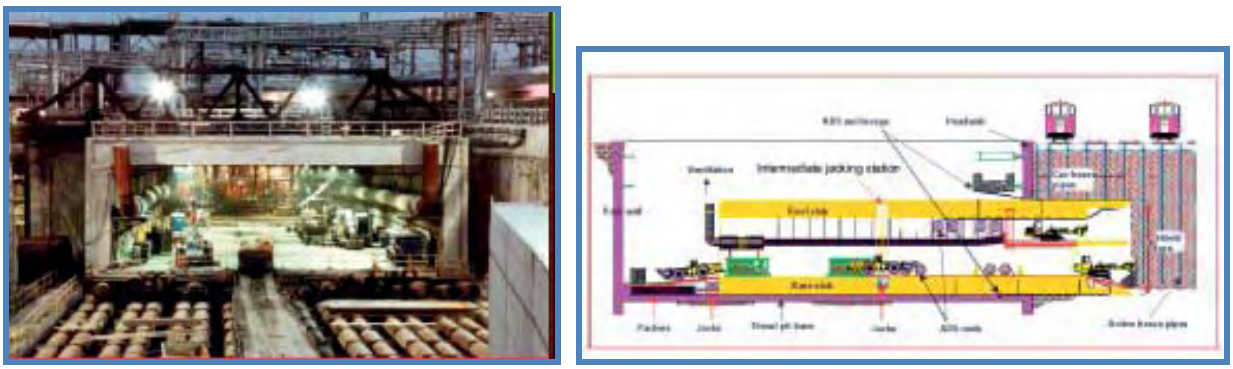

Figure 2.8: Example of a Box Jacking (Central Artery project, Boston)

2.3.5 Construction within a Steel Pile Envelope

As a final special method, it could be considered to create a load transferring structure in the soil surrounding the tunnel during the construction by an array of tubular steel piles, jacked trough the soils, removing the soil by augur drilling.

This was chosen for a railway undercrossing, part of the Dublin Port Tunnel project, shown in Figure 2.9, where there were a very short distance between the tunnel profile and the rail tracks. The length of the tunnel was about 200 feet.

In Dublin, the method allowed for a cover of about 12 feet above the tunnel, corresponding to that, the alignment should be lowered by 8 feet. However, the large water pressure and longer tunnel will complicate the use of the method for the tunnel under Montlake Cut. Jacking the steel piles in lengths of 200 feet will imply a number of work shafts on the way to be established within cofferdams in the channel.

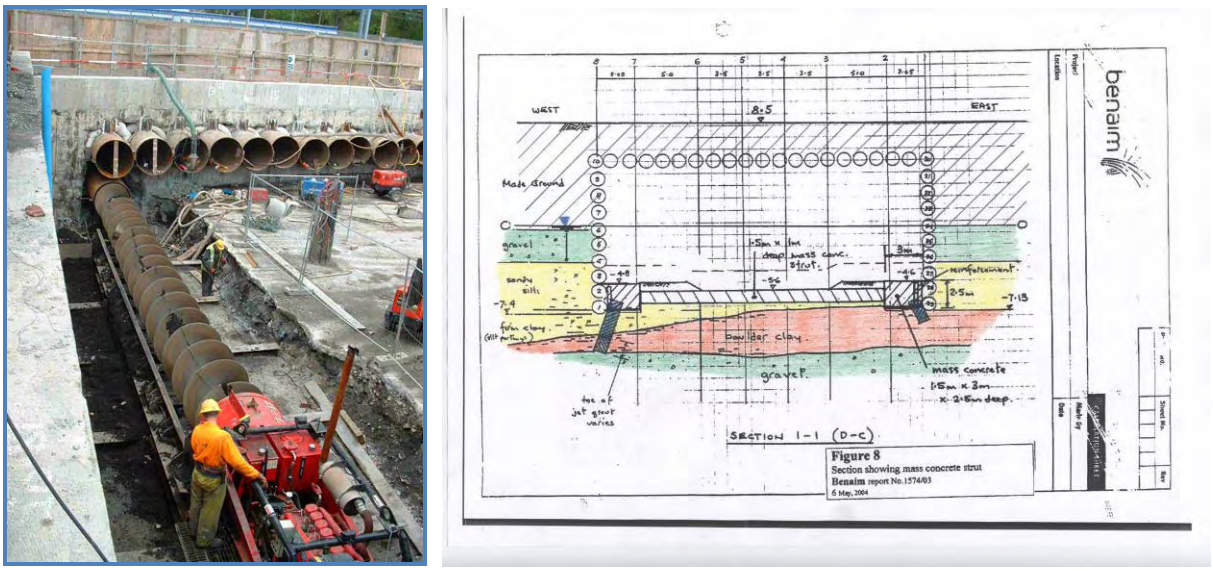

Figure 2.9: Example of tunnel construction within a tubular steel pile structure (Dublin, Ireland)

2.4 COMPARISON

A qualitative assessment and comparison of the eight alternative methods is given in Table 2.1. The following parameters have been addressed:

- Compliance with alignment;
- Obstruction to the navigation channel;
- Impact on the aquatic environment;
- Impact on wetlands;
- Cost level; and
- Construction risks (i.e. risks of delays and additional cost).

Three of the methods, "the Caisson method", "Box Jacking", and "Construction within Steel Pile" have not been practiced before under the assumed conditions in terms of water depths, the tunnel length and geometry. They are therefore not recommended.

For the methods where excavation takes place from above, immersed tunnel appears preferable.

The methods where excavation takes place underground will generally be more expensive and implies a lower elevation of the road alignment which would mean either higher grades or a larger detour of the horizontal alignment for compliance with the maximum grade. Sequential excavation or a bored tunnel (with or without stabilization of the soil) may be chosen.

A bored tunnel will be more attractive than sequential excavation due to lower costs and risks, but it will, on the other hand, require the deepest road alignment.

Sequential excavation with stabilization of the soil above the excavation by an arch or pressure ring would minimize the distance from the tunnel to the bottom of the navigation channel and thereby the impact on the alignment.

It is concluded that only an Immersed Tunnel or a Cut & Cover Tunnel will be realistic with the given alignment, and the Immersed Tunnel method is recommended due to reduced impacts from construction in the water.

Method		**Alignment compliance**	**Obstruct Navigation**	**Aquatic Environment**	**Wetlands**	**Costs**	**Construction Risks**
Construction from above ground level	1. Immersed Tube Tunnel method	Conforms	Limited impact	Impact to be mitigated	Affected by construction	Medium	Medium
	2. Cut & Cover Tunnel method	Conforms	Large impact	Long term in-water constr.	Affected by construction	Medium	Medium
	3. The Caisson method	Conforms	Large impact	Impact to be mitigated	Affected by construction	High	Very high
Construction from underground	4. Sequential Excavation method	Large deviation	No impact	No impact	No impact	High	High
	5. Sequential Excavation w. ground stabilization	Some deviation	No impact	No impact	No impact	Very high	High
	6. Bored Tunnel	Large deviation	No impact	No impact	No impact	High	Medium
	7. Box Jacking	Some deviation	No impact	No impact	No impact	High	High
	8. Construction within steel pile envelope	Some deviation	Some impact from shafts	No impact	No impact	Very high	High

Table 2.1: Comparison of alternative construction methods

3.0 DESIGN & CONSTRUCTION

3.1 GENERAL

The Tunnel at Montlake is described in Section 3.2, and the Tunnel at the Arboretum is described in Section 3.3. Some key environmental aspects are summarized in Section 3.4 and references to other documents are given in Section 3.5.

A plan view showing the general lay-out and horizontal alignment of the project between Portage Bay and the West approach spans leading to the floating bridge is shown in Figure 1 in the separate Volume 2 of the submittal.

The drawings are based on the alignment drawings prepared by WSDOT.

The road profile including the width of the lanes meets the geometric criteria applying to the other parts of the SR 520 project. The internal tunnel height will conform to Interstate Highway requirements, assuming a traffic clearance height of 16 feet and an additional 3 foot space for jet fans and other equipment mounted in the ceiling. Additional local height for equipment fixing may be provided by niches in the tunnel ceiling.

The various data and criteria, constituting the technical Design Basis for the project are summarized in reference /1/.

3.2 THE TUNNEL AT MONTLAKE

3.2.1 General Lay-out and Alignment

The vertical alignment of the road is shown on the longitudinal tunnel profile in Figure 3. The profile also shows the minimum levels and width of the navigation channel as specified on the NOAA navigation chart.

The enclosed tunnel extends between MR alignment Stations 10+30 and 27+80 (the total length will be 1,750 feet). It is assumed that the part of the tunnel between Stations 17+00 and 25+40 (over a length of 840 feet) will be constructed as an Immersed Tunnel. The length of the North Cut & Cover tunnel is 670 feet and the length of the South Cut & Cover tunnel is 240 feet.

The tunnel project also comprises a 480 foot long tunnel approach ramp section between the tunnel portal at Station 10+30 and the junction with Pacific Street and Montlake Boulevard at Station 05+50.

The maximum gradient of road is 7%, corresponding to the steepest value allowed under the highway design codes.

3.2.2 Ground Conditions and Foundation

The following short description of the geological site conditions is based on reference /2/. The following boreholes were taken into account: 1176-8582, 1204-8797, 1205-8799, 1375-9634, 1184-8693, 1184-8691 and 1177-8586.

The data regarding the soil and groundwater conditions offer a reasonable description for the current early stage but the basis has to be expanded for a more advanced design stage.

A geotechnical longitudinal profile, giving a simplified picture of the assumed main soil strata is shown in Figure 2.

It is found that the construction will generally be founded on competent soils. Consequently, no additional measures (e.g. piles or other ground improvement) for permanent foundations of the structures are foreseen.

Special attention must be paid, however, to the southern part of the tunnel in the area of the Montlake Cut where a potential liquefaction zone comprising mainly of very soft peat exists.

At the ramp and west part of the tunnel, the soil conditions comprise sand in the upper part, followed by very dense silty sand and hard, silty clay in the deeper part.

For the central and east part of the North Cut & Cover tunnel, there is sanitary landfill at the top, followed by moderately soft peat. The boreholes, however, in this area were ended in competent glacial till above the tunnel foundation level.

Under the North part of the Union Bay crossing, the soil conditions are characterized by very soft peat at the top followed by glacial till. Under the central and South part of the crossing and on the Montlake side, the peat is followed by layers of hard, clayey, gravelly silt, to silty sand and dense sand, and the clay till is lower.

3.2.3 Tunnel Cross Section

Typical cross sections showing the structural dimensions of the Cut & Cover tunnels and the Immersed tunnel are shown in Figures 4 and 5.

The road profile accommodates two General Purpose lanes and shoulders, and the width varies significantly to achieve required sightline distances in the sharp horizontal curves.

The thickness of concrete walls and slabs are adjusted to ensure that the uplift force from the water pressure is counterbalanced by an appropriate Safety Factor.

It is assumed that there is a central gallery at the middle of the tunnel, providing space for and easy access to the tunnel utilities. It will also constitute a safe escape area in case of an accident in the tunnel.

Along the parts of the tunnel where interchanging roads approach the main road and sightline requirements prohibit tunnel walls for the incoming traffic, the large spans of roof and bottom slabs imply that they will need to be pre-stressed.

It is assumed that the Approach Ramp and Cut & Cover tunnels will have a watertight membrane. The immersed tunnel is assumed constructed by watertight concrete, i.e. without the use of a membrane.

3.2.4 Tunnel Elements

The Immersed Tunnel is assumed constructed from two elements. Each element will be split into segments with 50-70 feet length. The joints between the segments will be provided with injectable waterstops and shear keys. In order to make the tunnel element monolithic during

floating and immersion, the segments will be tied together with the use of temporary longitudinal pre-stressing cables.

It is noted that the feasibility of the segmental construction of the elements should be verified with regard to earthquake resistance, in particular with regard to joint openings. An alternative solution more resistant to earthquake is to make the tunnel element monolithic. In this case, a waterproofing membrane will be needed.

3.2.5 Plans and Sections along the Alignment

The detailed horizontal alignment and lay-out of lanes for the interchange roads North and South of the main road is shown on the plans in Figures 6 and 7, based on the alignment drawings prepared by WSDOT. The possible location of service buildings containing technical rooms, mainly underground is indicated at each tunnel portal.

For illustration, and as basis for deriving the dimensions and quantities used for estimation of costs, a number of cross sections have been drawn as shown in Figures 8 to 12, referring to the stations shown on the plans and using road cross sections and information of the existing topography and bathymetry prepared by WSDOT.

The concrete trough cross sections of the ramp shown in Figure 8 assume that there is a groundwater table above the road level. In case that data should show that the groundwater table is lower, the ramp may instead be constructed by use of retaining walls without a bottom slab.

The North Cut & Cover tunnel is illustrated in Figure 9.

Cross sections showing the immersed tunnel in the dredged trench are shown in Figures 10 through 12. It is assumed that the immersed tunnel elements are founded on a sand layer.

The elements will be protected by sand or other granular backfill along the sides. There will be a stone layer on the top to protect the tunnel against the impact from an accidentally dropped anchor. The stone protection and filter layer on the backfill will protect it against erosion.

The South Cut & Cover tunnel is illustrated in Figure12.

3.2.6 Mechanical and Electrical installations

Ventilation of the tunnel is ensured by jet fans mounted under the ceiling, which will blow the air in the direction of the traffic. The fans will not always be running, since the air movement created by the vehicles will often be sufficient.

Storm water on the ramp sections will be collected by a drainage system before entering the tunnel and directed to a sump beneath the tunnel portal. Any water or spilled liquids drained within the tunnel will be collected in sump at the tunnel deep point.

Other tunnel installations include fire hydrant and sprinkler systems for fire fighting, emergency doors for escape and rescue access in case of accidents, power supply and distribution systems mainly serving lighting and fans, and SCADA system for automatic monitoring and control of the equipment.

3.2.7 ITS System

There will be an ITS system for traffic management with variable signs, CCTV cameras, etc. for traffic surveillance of SR 520, which will include the tunnel parts.

3.2.8 Main Construction Stages

General

Reference is made to the overview plans in Figures 13 and 14 showing eight main stages for the construction work. The stages are further illustrated in Figures 15 and 16 with regard to the land based activities, and in Figures 17 and 18 with regard to the marine activities.

Stage 1: Mobilization and Construction of Cofferdams

Following mobilization, a cofferdam large enough to accommodate the two tunnel elements and the Cut & Cover tunnel sections are established within each shoreline. Construction of the cofferdams involves a sheet pile wall along the perimeter for soil retention and groundwater cut-off. The cofferdams are subsequently excavated and dewatered.

Stage 2: Construction of Tunnel Elements

The cofferdams are utilized as dry docks for casting of the two tunnel elements. It is noted that the illustrations assume that the North tunnel element is constructed in the south cofferdam (and vice versa) to better suit the geometry of cofferdam shaped for the cut & cover tunnel.

Stage 3: Trench dredging and preparing Tunnel Elements for immersion

Before the tunnel element is immersed, an open trench is excavated and carefully cleaned for any soft material. The assumed method for dredged and mitigation measures are as described in Section 4. A sheet pile is placed along the shore line in the width of the dredged profile, to keep the shore stable against sliding.

Floating and immersion of the tunnel elements require that the elements are provided with temporary bulkheads at the ends and that the weight of the tunnel element is controlled with water ballast. Ballast tanks with associated piping and pumps are installed at each end of the tunnel element.

For towing and sinking, the tunnel element will be provided with different provisions such as bollards, lifting lugs, temporary access shafts, alignment towers etc. on the top slab.

Following fitting-out of the tunnel elements, the cofferdams are flooded and opened towards the bay.

Stage 4: Towing out of Tunnel Elements and placing of Element No. 1

The pontoon type sinking rig to be applied for the immersion is mounted on the first tunnel element, and the element is towed out and immersed to its final position in the dredged trench.

Stage 5: Placing of Tunnel Element No. 2 and Foundation of the Immersed Tunnel

The immersion rig is transferred to second tunnel element which immersed and joined to the first element by the use of a gasket system.

The tunnel elements are initially supported by jacks placed on temporary foundation pads. The space between the bottom of the excavation and the element is then filled with sand, which is pumped in by means of pipes located in the bottom slab of the tunnel element.

When the sand is in place the temporary supports are released and the weight of the tunnel element is transferred to the sand foundation.

Permanent stability against uplift is provided by casting of the ballast concrete (as the water ballast tanks are removed), and the internal parts of the tunnel joints are finalized.

Stage 6: Protection of the Immersed Tunnel and Construction of Cut & Cover Tunnels

Locking fill is placed along the tunnel element, and finally remaining fill and stone protection is placed.

The cofferdams are closed by re-establishing the wall towards the bay, and once they are dewatering, the Cut & Cover tunnels will be cast.

Stage 7: Construction of Tunnel Ramp

Following completion of the Cut & Cover sections, the north tunnel ramp is constructed within a dewatered cofferdam. The south ramp area will be constructed at an earlier stage, suiting the work schedule of the main road.

Stage 8: Tunnel Installations, Road and Finish Works, and Commissioning

Mechanical & Electrical (M&E) equipment is installed in the tunnel, and various road and interior finish work is constructed. As the final main activity, full scale testing and commissioning of the M&E systems shall be carried out.

3.2.9 Construction Time Schedule

The assumed time schedule for the construction work is shown in the volume with figures. According to the planning, the overall duration will be 2 years and 10 months.

The marine works are carried out within a weather window from October 1 to March 15 in order to avoid impact on the salmon migration. The dredging is done over a period of 2 months, assuming that it extents 14 hours per day.

3.3 THE TUNNEL AT THE ARBORETUM

3.3.1 General Lay-out and Alignment

The vertical alignment of the main road is shown on the longitudinal profile in Figure19.

The enclosed tunnel extends between MR alignment Stations 71+90 and 95+50 (the total length will be 2,360 feet). The maximum gradient of the main road is about 5%, and there is a minimum gradient of 0.4% to ensure drainage to a pump sum located at the low point.

The tunnel project described in the drawings also comprises a 770 foot long tunnel ramp and bridge transition structure between Station 95+50 and 103+20 at Foster Island.

The tunnel extends as far to the West as possible, given the location of the interchange connection ramps east of Montlake.

The location of the tunnel portal allows the transition to the bridge to occur at the East end of the Foster Island so that impact to the existing shoreline, which is utilized by migrating salmon, is minimized.

3.3.2 Ground Conditions and Foundation

Based on a brief evaluation of the received data, the ground conditions under the tunnel foundation level are indicated on Figure 19 and can be characterized as follows:

Montlake and Foster Island represent original "islands" or firm points with good soil conditions. In between these firm points the basins have filled up with soft clay and peat. The thickness of the peat extends up to about 55 feet between Montlake and Foster Island. Below the peat, there is a transition zone of relatively soft material (i.e., silt, clay, sand, some places with organic content) with thickness up to 25 feet. Below the soft strata there is glacial till offering very good foundation conditions.

The following assumptions regarding tunnel foundation have been made:

At Montlake and the firm part of Foster Island, it is expected that the tunnel and ramps can be founded directly on the ground without any need ground improvement. Along the intermediate section with soft soils, soil improvement by utilizing piles or (for thinner layers) soil replacement, will be necessary as shown on the longitudinal profile.

The silty clay and sand has a potential for liquefaction in case of an earthquake and is compressible. Where the tunnel will be situated on these strata, the liquefaction potential could be eliminated by stone columns or steel piles. The design at this stage has assumed the application of steel pipe piles (driven open ended).

3.3.3 Tunnel Cross Section

A cross section at each end of the tunnel is shown in Figure 20 and Figure 21. The thickness of concrete walls and slabs are adjusted to ensure that the uplift force from the water pressure is counterbalanced by an appropriate Safety Factor.

As for the tunnel at Montlake, it is assumed that there is a central gallery at the middle of the tunnel for utilities and use as a safe escape area in case of an accident in the tunnel.

Along the parts of the tunnel where interchanging roads approach the main road and sightline requirements prohibit tunnel walls for the incoming traffic, the very large spans of roof and bottom slabs imply that they will need to be pre-stressed.

3.3.4 Plans and Sections along the Alignment

The plans shown in Figures 22 to 24 are based on the alignment drawings and indicate the detailed layout of the main road in the Arboretum Tunnel. The possible location of service buildings containing technical rooms, mainly underground is indicated at each tunnel portal.

For illustration some selected cross sections have been drawn as shown in Figures 25 and 26 referring to the stations shown on the plans and using road cross sections and information of the existing topography and bathymetry prepared by WSDOT.

3.3.5 Tunnel Installations

The description of the Mechanical & Electrical installations and ITS system is in principle as for the Montlake Tunnel (Sections 3.2.6 and 3.2.7).

3.3.6 Construction

The general construction sequence takes into account the need to maintain traffic flow of the existing SR520 balancing the need to deliver materials and perform the actual construction work. The construction work also need to be very sensitive to the environment, keeping as small a foot print as possible.

The general construction sequence will be performed from West to East. This is due to the fact that mobilizing equipment and materials will be easier and less expensive if done from the "landside" rather than from Lake Washington.

The first area of work is at the West Ramp. The design of the temporary works for the tunnel and West ramp will be performed within a cofferdam built in stages of 500 feet to 700 feet long. Each end of the stage will be a cofferdam wall, allowing the stage to be dewatered independent of the next stage. This will allow work within the stage to progress independently. This will also allow some of the more expensive temporary material to be "re-used". This temporary material includes the transverse truss which helps to stabilize the cofferdam walls and acts as pile guides for the tunnel sections requiring a pile foundation.

The crane used for sheet piling and excavation will work from a trestle inside the cofferdam area. The work from inside implies that a work area outside the cofferdam area will not be needed.

The East Ramp will be constructed using sheet piles for stabilizing the excavation. However, no trestle is required due to the elevation of the glacial till.

A more detailed description and illustration of the method is given in /3/.

3.3.7 Construction Time Schedule

On the background of program investigations made for Proposal G, ref /3/, a construction period of 5 years is assumed.

3.4 ENVIRONMENTAL ASPECTS

3.4.1 General

The permanent environmental impact related to emission of ventilation air and discharge of water from the tunnels and ramps are outlined below.

The impacts from the marine works for the Tunnel at Montlake, in particular effects due to the dredging, are described and discussed at a more detailed level in section 4.

Other environmental effects to be investigated include the temporary and long term effects from tunnel construction on the wetlands and impacts on groundwater flow and surface water run-off from a tunnel at the Arboretum.

3.4.2 Air Quality

The Arboretum tunnel ambient air quality criteria will likely be exceeded where the ventilation air is exhausted just at the tunnel portals. However due to the wind, it will be dispersed and reach acceptable levels in a zone within some distance from the portal. The dispersion may be analyzed by model calculations and results discussed with Authorities (EPA) in order to establish if mitigation measures will be required.

As shown on the Longitudinal Profile, the Conceptual Design at the present stage assumes a ventilation shaft at the Montlake tunnel portal for the main road. The shaft, equipped with exhaust ventilators, will function as a chimney, ensuring that the exhaust air is diluted at a high level so that air quality criteria at the ground level can be adhered to.

For the Montlake tunnel, mitigation may not be needed due to its shorter length and smaller traffic volumes.

3.4.3 Discharge of water

The water from the low point sump and the ramp sumps will be cleaned by passing through a sand trap and an oil separator.

Pollution due to hazardous waste spillage reaching the sumps will be detected and removed by a tanker.

3.5 REFERENCES

/1/ Seattle SR 520, Assessment of Tunnel Schemes, Options Study Report (Rev.1 dated 2008-02-12), prepared by OCC for the Keystone Center, November 29, 2007.

/2/ Existing Geotechnical Data Report, Volume 1 – Data Report and Existing Explorations and Geotechnical Laboratory Test Data for West Side Projects 633 to 925, prepared by Shannon & Wilson, Inc., December 19, 2006.

/3/ Seattle SR 520, Proposal G - Arboretum Tunnel. Conceptual Design and Cost Estimate, (Rev.1) prepared by OCC for the Keystone Center, February 26, 2008.

4.0 IMPACT ON AQUATIC ENVIRONMENT

4.1 GENERAL

This section concerns the impacts on the aquatic environment which could be caused by the tunnel at Montlake.

Following a review of the existing conditions in Section 4.2, Section 4.3 provides an explanation and discussion of the possible impacts due to the dredging and how they may be avoided or minimized. A further description of mitigation measures are given in Section 4.4. Section 4.5 offers a discussion of the models which are available for a more detailed analysis for prediction of the effects from sediment spillage. Referred literature is listed in Section 4.6.

As described in Section 3, this proposal would connect SR 520 with Montlake Blvd/Pacific Street via an immersed tunnel section. The construction area would cross under Union Bay and include work beneath two reaches of the Federal Navigation Channel, the Montlake reach (100 feet wide) and the portion of the Union Bay reach where it widens from the 100 foot width of the Montlake reach to attain the 200 foot width, authorized for the Union Bay reach the Federal Navigation Channel. Both reaches are maintained at 30 feet deep.

4.2 EXISTING CONDITIONS

4.2.1 Geology

As referred in Section 3.2.2, six (6) sediment cores were taken in or near the proposed trench alignment for the immersed tunnel. Unfortunately, the coring information lacks specific characterization of the sediments within the various layers. They do indicate that the initial trenching will occur primarily in peat (a mixture of silt/clay and organic material). In the some of the nearshore it has been covered with fill. Both of these layers reside on compacted glacial till material deposited during the Vashon Glaciation about 15,000 years ago (Moshenberg 2004). There is some evidence of isolated, soft silt deposits within the area but they appear dispersed.

To access the peat the overburden of fill has to be removed. Because that top layer of sediment is typically unconsolidated the side slopes of the dredge cut through this layer will require side slopes of 3:1 or greater to avoid slumping of the material into the dredge cut. The shape of the side slope area for the peat layer will depend on its soils characteristics, Once the peat is removed exposing the Glacial till layer some degree of leveling and shaping of that material will be required to obtain the foundation characteristics required by the immersion tunnel.

The limited nature of the existing sediment information precludes a comprehensive discussion of potential dredging related sediment resuspension and dispersion. However, consolidated sediments with moderate to low Atterberg Limits[1] can be removed as “clumps” with minimal resuspension of sediment, provided appropriate dredging equipment is used.

---

[1] **Atterberg Limits and Moisture Contents**
Atterberg Limits are derived from standard engineering laboratory tests that measure a sediment's propensity to behave as a solid, plastic substance, or a liquid at varying moisture contents. The Plastic Limit is the moisture content, in weight percent at which and unconsolidated sediment passes from a solid (non-deformable) to a plastic

The stability of the sediment also allows for a more vertical dredging cut which, in turn, reduces the necessity of creating significant side slope area to control slumping. The reduced side slope width reduces the width of the lake-floor disturbance by reducing the volume of sediment requiring handling.

In similar sediments (consolidated clay material) an "environmental" clamshell bucket has been used effectively on Boston Blue Clay and New York Harbor Passaic River Clay to create stable, vertical cuts with limited dispersion of suspended sediment. The "environmental" clamshell bucket can also be used for the dredging of the peat layer.

4.2.2 Wetlands

An extensive discussion of the wetlands in the project area is presented in Appendix "E" (Ecosystems Discipline Report) of the SR 520 Draft Environmental Impact Statement (DEIS). Eurasian water-milfoil and white water lily dominate the nearshore habitat in the shallow water zones. Both species are invasive and are not used by Chinook salmon for spawning areas.

4.2.3 Aquatic resources

The Lake Washington Ship Canal is the migratory corridor for anadromous fish using the watershed. The immersion tunnel trench would cross that access route. WSDOT has stated that all in-water work for the project would be done within the regulatory work windows established for Lake Washington, Union Bay, and the Montlake Cut. The in-water work window for the Ship Canal (Portage Bay) is October 1 to April 15. However, the window for in-water work in Union Bay and Lake Washington is July 16 to March 15. Combining the dates indicates the in-water construction window will be October 1 to March 15 (SR 520 DEIS).

Sockeye salmon (*Oncorhynchus nerka*) are a species that is experiencing a marked recovery in the Seattle area. Most sockeye salmon are anadromous spending half their life or more in the open waters of the Pacific Ocean. However, there are some individuals that spend their entire lives in a freshwater environment. These non-anadromous individuals are known as "kokanee" and can be seen and caught in Lake Washington. Both types of sockeye salmon spawn in areas of clean coarse sand or small gravel within Lake Washington. Preliminary indications are that such habitat is not present in the proposed construction area (SR 520 DEIS).

Finally, there are species of fish in the area that are managed under the federal Endangered Species Act of 1973. Their presence and the potential impacts of working in the area of the Federal Navigation Channel must be addressed through consultation with the responsible Resource Agencies involved in managing these species. Typically this includes the US Fish and Wildlife Service and National Oceanic and Atmospheric Administration, National Marine Fisheries Service, State Fisheries Agencies and Native American Tribes with interests in the resource. The coordination is a Section 7 Consultation.

In this location the consultation will focus on Chinook salmon (*Oncorhynchus tshawytscha*) and Bull trout (*Salvelinus confluentus*). Because of their need to transit the proposed work area, noise and suspended sediment are likely to be the principal issues that require attention. NOAA

(deformable) state. The Liquid Limit is the moisture content, in weight percent of water, at which a plastic sediment passes from a plastic to liquid state.

Fisheries has proposed critical habitat for the Puget Sound evolutionarily significant unit of Chinook salmon. This proposed habitat includes Lake Washington, as well as the Ship Canal and Lake Union between the Ballard Locks and Lake Washington. The USFWS has identified Lake Washington as critical foraging, migration, and overwintering habitat for the endangered Bull trout (SR 520 DEIS).

The State of Washington maintains a similar list of endangered, threatened, sensitive, and species that are candidates for listing. The State program also includes species of recreational, commercial, or tribal importance that are considered vulnerable. The State list identifies the same species found on the federal program list. Chum, sockeye, and kokanee salmon as well as rainbow/steelhead trout and coastal cutthroat trout are state designated Priority Species fish species which may be found in the general area (appendix E, SR 520 DEIS).

4.3 POSSIBLE IMPACT DUE TO DREDGING

4.3.1 General

Constructing Proposal K as an Immersed Tunnel requires creating a tunnel and installing it in an approximately 800 feet long trench extending from Montlake to the Parking lot of Husky Stadium. The trench would be approximately 350 feet wide. Total area impacted by the dredging would be approximately 280,000 square feet (6.4 acres or 2.6 hectares). At this stage in the design assessment, it is estimated that the trenching will require about 2 months to complete by dredging approximately 390,000 cubic yards of sediment.

Once the immersion tunnel is installed in the trench, the site will require the placement of fill material for burial of the immersion tunnel.

The Creation of a trench to embed the immersion tunnel requires the dredging of sufficient sediment to insure that the structure can be placed at the base of the trench on stable soils. In addition, the burial depth beneath the Navigation Channel must insure that the Channel can be maintained at the authorized water depth. In prior alternative alignment discussions where immersion tunnel dredging has been assessed, it was reported that the peat must be removed to allow the foundation to be set on the glacial till.

Because of the proximity of the construction site to a transportation corridor (Lake Washington access route) and urban center, the Lake floor in the vicinity of the proposed trench should be inspected for wrecks that may have historical significance. Coordination with the State Department of Archaeology and Historic Preservation should be undertaken should this option be pursued.

4.3.2 Dredging Equipment

There are two basic types of dredging equipment in regular use: bucket and hydraulic pipeline. Each dredge type has an array of options or modifications for dealing with local conditions. Similarly, each has limitations and can produce environmental impacts. The list of dredge types includes:

Bucket - the term used to represent all types of mechanical dredges which are used to excavate and lift the material mechanically by means of buckets or scoops.

Hydraulic Pipeline - a hydraulic dredge whose prime function is to excavate and move material hydraulically without rehandling. Hydraulic dredging requires dilution with water for material pickup and transport by pumping it through a pipeline to a discharge location.

Airlift - these systems use hydrostatic pressure to draw material into a piston-like cylinder. Once the cylinder is full of sediment, compressed air pushes the material through a pipe to a barge or discharge site. Airlift dredges are not commonly used in the U.S.

Dustpan - hydraulic, self-propelled dredge that uses a suction mouth, shaped like a large dustpan or vacuum cleaner, fitted with water jets for dislodging material from the bottom of the channel.

Hopper - self contained hydraulic dredge capable of dredging material, storing it onboard, transporting it to a disposal area, and dumping it in open water.

Non-conventional type - specialized dredges which combine the features of hydraulic and mechanical dredges.

Cutter suction (hydraulic) dredge - pipeline dredge mounted with a rotating cutter that loosens and directs sediment into the intake area of the system.

Water Injection - A type of dredging in which water is injected at high velocity and/or volume, into the shoaled material to enable it to flow or be carried to a deeper area by gravity or current.

For the trenching associated with option K, it is likely that the work will be undertaken with a clamshell bucket dredge and scows to transport the sediment to a selected disposal option. Dredge buckets come in a variety of sizes up to 50 cubic yards. Dredged material scows are available in a variety of sizes and sediment holding configurations. Typically, a dredger can remove between 6,500 to 10,000 cubic yards per day. Figure 4.1 shows examples of a clamshell bucket and dredging by this method.

Figure 4.1: Examples of Clamshell Bucket and loading of dredged material on a scow

4.3.3 Dredging Impacts

There are three basic types of environmental impacts associated with dredging:

1. Direct loss of habitat and associated resources;
2. Alteration of the remaining habitat/environment within the dredge area; and
3. Collateral impacts associated with sedimentation (sediment resuspension and subsequent re-deposition) in the near or far field areas surrounding the actual dredging site.

The environmental impacts of dredging are usually relatively short lived (Rhodes and Germano. 1986). Typically, disturbed sediments are capable of supporting aquatic life immediately after the dredging is completed. Reestablishment of a biological community in the disturbed area is controlled by the nature and characteristics of the new sediment surface and availability of colonizing organisms (Wilber and Associates 2005). The presence and ultimate fate of sediments resuspended into the water column can be even shorter (Newcomb and Jensen 1996).

The concerns usually focus on the sediment effects to either water column or benthic resources. During the dredging process sediment is resuspended and injected into the water column. The resuspension occurs at the dredging site and may occur, also, at the dredged material disposal site, depending on the situation. The amount of sediment added to the water column may be relatively small or substantial depending on the cause of the resuspension (e.g., hydraulic cutterhead dredge, dragline bucket or natural events).

The concern with sedimentation forms the basis of a field of resource investigation (Newcombe and Jensen 1996; Wilber and Clarke 2001) with a relatively new focus on sediment resuspension as a dredging effect (Berry and Associates 2003). To date much of the available literature on the detrimental effects of suspended sediment has been based on impacts on freshwater systems rather than dredging (Wilber and Clarke 2001). However, there is a growing body of information that assesses natural and anthropogenic sedimentation that may be problematic, and identifies prudent dredging project management and resource protection measures for a variety of settings (Berry and Associates 2003).

4.3.4 Suspended Sediment

Suspended sediments are solid particles in the water column. Their presence in a water body can be problematic. They are transported by flowing water, wind, and gravitational action. Suspended sediments can transport adsorbed toxic substances, reduce light penetration, irritate gills, coat eggs, be confused for food by larval fish and filter feeding organisms, reduce dissolved oxygen levels, impair predator – prey relationships and act as a barrier to aquatic resource movements. Physiological effects of suspended sediment can result in impaired growth, histological changes to gill tissue, alterations in blood chemistry, and an overall decrease in health and resistance to parasitism and disease.

The lower the specific gravity and finer the grain size of the materials resuspended during dredging, the longer they will remain in the water column to potentially travel further away from introduction site. Conversely, sand sized materials tend to settle quickly and in close proximity to the existing footprint of the dredging operation (Wilber and Clarke 2001.

Another attribute of suspended sediment not fully explored is the tendency of the sediment to form turbidity plumes at depth. Studies undertaken in New Haven Harbor, CT regarding

dispersion of suspended sediment have revealed that they tend to concentrate in the near bottom area. Gravity influences the nephloid mixture of water and sediment causing it to seek the lowest points in the vicinity of their source (Bohlen and Associates 1996). In dredging situations where water currents are not significant the nephloid layer (sediment and water plume) can remain in the area created by the dredging resulting in a localized deposition virtually in the footprint created by the dredging.

It is generally agreed that suspended sediment values below 80 mg/l can be tolerated by aquatic species (Newcombe and Miller 1991). In the diagram below, there is roughly a 1:1 relationship between Nephelometric Turbidity Units (NTU's) and mg/l (50 mg/l = 64 NTUs). Without further analysis of the sediment in the proposed trench area, the amount of sediment that might be resuspended can not be quantified. However, a graphic depiction of potential impacts is provided in Figure 4.2 to help understand the issue. And, it is unusual for suspended sediments to exceed 1000 NTUs when dredging in consolidated sediments.

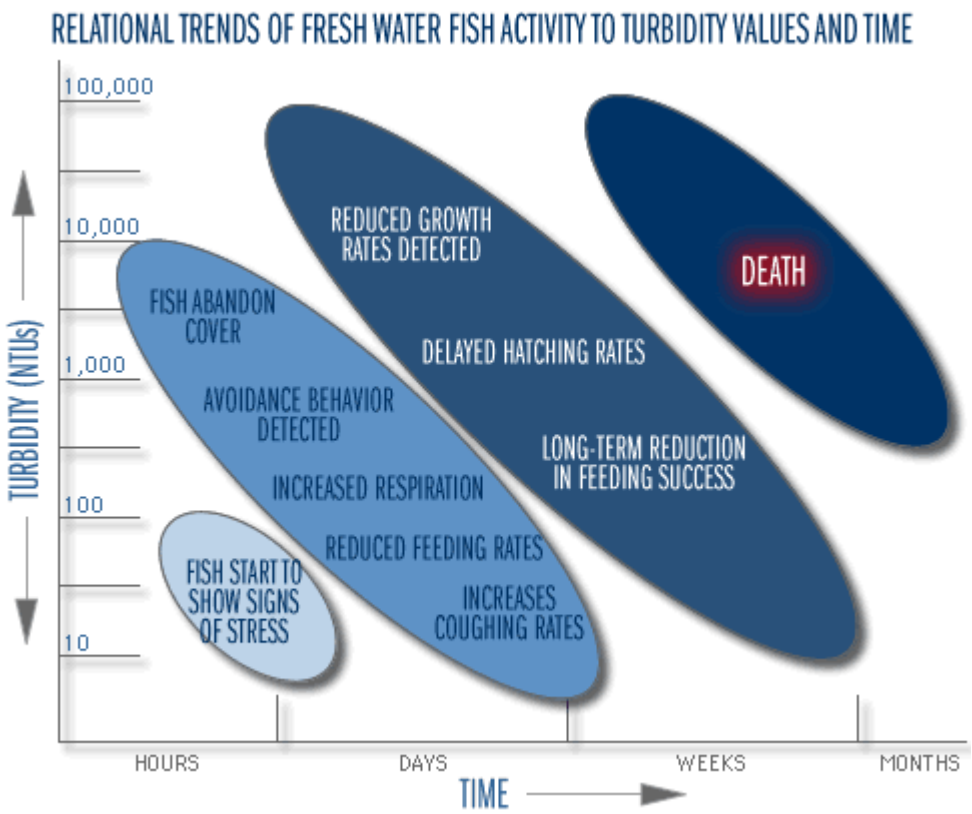

Figure 4.2: Potential impacts due to Suspended Sediments
Schematic adapted from "Turbidty: A Water Quality Measure", Water Action Volunteers, Monitoring Factsheet Series, UW-Extension, Environmental Resources Center. It is a generic, un-calibrated impact assessment model based on Newcombe, C. P., and J. O. T. Jensen. 1996. From: "Water on the web", http://wateronthweb.org/aboutus/index.html

The creation of a suspended sediment event during dredging is related to the loss on handling and each cycle of the dredge bucket generates a separate discharge. A typical cycle of a dredge bucket can vary from 2 to 4 minutes from discharge in the scow, return to the dredge area, descent, sediment capture and closing of the bucket, assent through the water column and movement of the bucket over the scow.

In areas where the current is sufficient to displace each of the discharges created by the dredge, the resuspension events appear as almost individual insertions. When water currents are slow or minimal, sediment can be added in a cumulative fashion. However, suspended sediment tends to entrain the surrounding water while, simultaneously being sorted by gravity. Larger, high specific gravity particles migrate to the bottom at a faster rate than small or ones with a lower specific gravity.

In equipment comparison studies in Boston Harbor, resuspension of sediment was below expectations. Hays and Associates (2001) and Hays and Wu (2001) found that during normal operation, 0.22 percent of the material dredged was lost to the water column using a closed bucket and 0.66 percent was lost using an open bucket. Much of the resuspension occurs on the seafloor during the placement and closing of the bucket. When the buckets were not fully closed due to debris or rock holding the jaws apart, the loss was more extensive.

4.3.5 Sedimentation

Sedimentation is the deposition of sediment and can be measured as either the rate of sediment accumulated per unit area of substrate (e.g., $g/m^2/hr$) or as overburden thickness (e.g., millimeters above the pre-existing sediment horizon). Sedimentation is a natural process that occurs at various rates on time scales characteristic of specific bodies of water, depending on the rate of sediment input. For instance prior to 1968, Lake Washington experienced a sedimentation rate of approximately 5.2 mm/yr. Since then, the rate has been reduced to about 2.5 mm/yr (Mosenberg 2004).

Aquatic resources are generally adapted to survive conditions within some normal range. Most anthropogenic sources of sediment (e.g., impervious surfaces, dredging and disturbed soils runoff) can exacerbate natural sedimentation rates, either in acute pulses or chronically over protracted periods.

The nature and extent of the environmental impacts of suspended sediment and sedimentation that might occur outside a dredging area are strongly influenced by the local conditions, equipment, dredge operator skill and duration of the dredging. However, just as with suspended sediment, the longer the duration of the dredging, generally, the larger the resulting impacts (Berry and Associates 2003).

To assess the consequences of dredging an understanding of biological events that may be adversely impacted is invaluable as it allows the determination of how much deposition over a given period of time is acceptable. Although dredging and dredged material disposal operations have been monitored for decades, certain aspects of sediment resuspension and deposition have only recently become amenable to monitoring Similarly, aquatic resource responses to varying amounts of sediment resuspension from natural (weather) and artificial (dredging) events are only now becoming understood (Berry and Associates 2003).

4.3.6 Control of Sediment Spillage

One way to avoid adverse resource impacts is to not dredge during periods of the year when sensitive species or life cycle stages are present. However, there have been a number of advances in dredging technology which have been shown to reduce the adverse environmental impacts associated with dredged material handling. The use of a closed (environmental) clamshell buckets is one of the most successful of the improvements in limiting the resuspension of sediment during dredging.

Additionally, research has revealed that the nature and extent of the resuspension plumes as well as their associated adverse impacts are not as extensive as had been previously perceived (Bohlen and Associates 1996). These discoveries are often the result of improvements in monitoring technology and modeling. As a result of these findings, it has become possible to restrict adverse impacts by selective use of equipment type, size, or production rates during periods of concern.

Management of barge scow overflow is yet another suspended sediment management tool. Scow overflow is usually employed as an operational practice to maximize the volume of sediment placed in each barge by the dredger (economic load). During the later stages of scow filling excess water that accumulates in the barge during normal loading is displaced with more dredged material. The practice of maximizing each barge load of material moved has a number of benefits including retaining pollutants in proximity to where they presently occur and limiting the dispersion of sediment at disposal sites. If the concern is the level of suspended sediment at the dredge site barge overflowing is counter productive (Ludwig 1996)

4.3.7 Evaluation of Impact

To initiate an evaluation of the environmental consequences of dredging, the physical and biological characteristics of the sediment, the overlying water column and the downdrift (deposition) area must be known. Sediment data can be collected in a variety of ways and subjected to laboratory analysis. Samples should be collected from the maximum depth of the dredging. The hydrodynamics of the overlying water can be determined from water column and current evaluations.

Another component of the assessment is determining if the area is a depositional or erosion area. The wind fetch distance and water circulation pattern in the project area can be used to determine the likely distribution of sediment generated by the dredging. The prevailing winds are commonly out of the southwest toward the east and the existing SR 520 pontoon bridge acts a significant wind and wave barrier. The initial indications are that the shoreline is not constantly subjected to erosion forces. Once sediment characteristics and water circulation patterns are more fully known, the likely sites of resuspended sediment deposition can be hypothesized.

4.4 MITIGATION

4.4.1 General

Plans to avoid, minimize, and mitigate the project's potential effects on the environment with the intent of no net loss of functions or values are discussed in the DEIS. The DEIS also notes that the development and use of a temporary erosion and sediment control (TESC) plans will be required. The plans address requirements of federal, state, and local permits related to

environmental impacts of the construction. TESC plans identify areas where erosion and sediment disturbance would occur and specify best management practices to control the disturbance as well as spills in those areas (SR 520 DEIS).

Dredging impacts may be mitigated by systems beyond those associated directly with the dredging operation (described above). The additional measures include the use of siltation control systems such as cofferdams and silt or pneumatic curtains. In the situation at hand, installing a cofferdam around the work area is impractical.

4.4.2 Silt Curtains

Although the silt curtains are often required, their value in protecting aquatic resources is case specific and their utility should be carefully assessed prior to calling for their use. Silt control systems provide a partial barrier to suspended sediment in the water column by restricting sedimentation migration from the enclosed area. They are effective in situations where current flows are less than 1.0 knots (52 cm/s) [Francingues and Palermo 2005]. Above that velocity, they become difficult to anchor and control and their operational utility begins to fail.

And, because they provide a stable settling zone in the upper water column, they concentrate suspended sediment in the near bottom zone. In areas where the benthic community is of concern, concentrating the sediment can have undesirable consequences. In areas where a slope exists, the concentrated suspended sediment tends to flow down slope away from the project site.

The Francingues and Palermo (2005) discussion of silt curtain use includes guidance and check lists as well as deployment suggestions. The website for the paper is in the reference section below.

4.4.3 Disposal or beneficial use of Dredged Sediment

Dredged material disposal options include regional open water disposal sites such as the Elliot Bay Dredged Material Disposal Site as well as use of special management practices including beneficial use of the sediment.

The use of unrestricted, open water disposal for the trench material may be precluded if there are pollutants present in the sediment. Moshenberg (2004) reported that Polychlorinated Biphenyl (PCB), particular Aroclor 1254© as well as mercury, arsenic and copper, polycyclic aromatic hydrocarbons and volatile organic compounds are present in most of the 29 samples she tested from Lake Washington (no samples are from within the project area).

However, discussions with representatives of the Seattle District, US Army Corps of Engineers indicate that the area has a very low deposition rate, and it appears that the majority of the sediment requiring dredging from the area is within the “suitable for open water disposal” category (Seattle District, US Army Corps of Engineers 2008).

Should more focused sampling and testing reveal the presence of pollutants at levels of concern, sediment handling would become more problematic. Typically, pollutants are found in the upper (most recently deposited) layers of sediment. A method of minimizing the impacts of such a situation employs the removal of the polluted layer of material, disposing of it then using the open water disposal option for the remaining volume.

Mitigation of the impacts of dredging includes the beneficial use of the sediments removed from the proposed trench area. The options include wetland creation, existing habitat enhancement, use as fill for increasing elevation or remediating brown field sites. The selection of a suitable beneficial use typically relies on locating places where the existing habitat is of limited or marginal value.

4.4.4 Opportunity to Restore or Establish Habitat

In the project area, the emergent wetland community is reported to be dominated by Eurasian Water-milfoil and white water lily (Appendix E, SR 520 DEIS 2005). These are two invasive species that provide limited benefits to native aquatic species. The construction will remove the existing vegetation creating an opportunity to restore or establish habitat that affords native species biological functions and values that will benefit them.

Spawning Chinook salmon lay their eggs in sandy gravel areas in shallow water. Young Chinook have been found to preferentially seek water that is less than 3 feet deep with a similar sandy gravel substrate (Tabor and Associates 2004a & b). Young Chinook find abundant prey and apparently refuge from large predatory fish in this shallow water habitat. These habitat types are in decline because much of the Lake Washington shoreline has been modified, eliminating the shallow water preferred by Chinook salmon. A variety of predatory fish species such as bass, perch, bullheads, and northern pike minnow (some of which are young salmonid predators) favor these modified shorelines (Tabor and Associates 2004a).

The backfill for the tunnel could be specified to provide Chinook salmon with a swath of this habitat extending across the project. The length of time that the material would provide the desired habitat functions and values for the salmon is controlled by the rate of local sediment deposition.

4.4.5 Other Mitigation Opportunities

Another mitigation opportunity would be the restoration of fish passage access to systems where it has been lost due to human intervention. This is option is presented in the SR 520 DEIS.

Mitigation options available during actual construction include erosion and runoff control and management of construction activities such as lighting and filtration of dewatering flows. During the construction sequence some activity would occur during periods of reduced light or darkness. Artificial lighting can use controlled shading and be directed to limit the amount of light striking the water. Adequate sizing of dewatering filters and controlled release of the processed water can further limit adverse impacts. This can reduce or avoid affecting fish behavior.

Upland mitigation measures that can benefit water quality include the use of post construction runoff controls such as maintained and natural buffer strips, groundwater recharge areas and selective tree plantings. The air rights over the tunnels for developable property opportunities can be a benefit for the local community.

4.5 SEDIMENTATION MODELS

The detailed need for mitigation of impact from spillage during dredging should be analyzed in a subsequent phase. There are a number of models that have proven useful in guiding the assessment of suspended sediment and its fate and potential effects.

The "DREDGE" model is designed to facilitate decision making based on the assessment of environmental impacts associated with dredging operations. The model estimates the mass rate at which sediments will be resuspended during hydraulic and mechanical dredging activities. The model provides insights on the generated suspended sediment concentrations. Additional inputs to the model regarding site conditions can allow the determination of the size and extent of the resulting suspended sediment plume. The DREDGE model also has the ability to estimate particulate and dissolved contaminant concentrations in the water column based upon sediment contaminant concentrations and equilibrium partitioning theory. It is available on URL address < http://el.erdc.usace.army.mil/elmodels/pdf/dredge.pdf >

Another model that merits consideration is known as SSFATE. This model was developed, jointly, by Applied Science Applications and the U.S. Army Corps of Engineers (USACE) Environmental Research and Development Center (ERDC). The model is one of a suite of USACE models that simulate various components of dredging activities. SSFATE (Suspended sediment Fate) is available on < http://www.ch-t.com/models.shtm >

Other members of the suite include SSDOSE which has begun to show some utility when challenged to determine the volume of sediment being deposited in the near and far field from a dredging project and STFATE which deals with dredged material disposal The models are on line and available from the ERDC; SSDOSE (Suspended sediment (Dose) (Commercially available at: < http://www.appsci.com/software/index.htm > and STFATE (Short Term Fate) on < http://www.ch-t.com/models.shtm >

The SSFATE model characterizes sediment deposition as the mass of sediment particles that accumulate over a unit area. Because the amount of water is not known in the deposit, SSFATE by default converts deposition mass to thickness by assuming no water content. SSDOSE subsequently uses the mass accumulation output of SSFATE. This model requires an input of the sediment water content to generate thickness.

DREDGE, SSFATE and SSDOSE all use an estimate of the suspended sediment source strength (sediment re-suspended into the water column during the dredging cycle). The size of the input reflects the magnitude of the source strength as derived from the four principal mechanical dredging-induced resuspension events: the bucket impact with the river bottom, raising the bucket through the water column, breaking the water/air surface with the bucket, and maneuvering the bucket to the discharge scow (Hays and Wu 2001).

Computing these sources of suspended sediment resulting from dredging operations afford the modeler the following features:

- Ambient currents can either be imported from a numerical hydrodynamic model or drawn graphically using interpolation of limited field data.
- Computational model predicts the transport, dispersion, and settling of suspended sediment released to the water column during dredging using a random walk procedure.

- Model simulates suspended sediment source strength and vertical distribution from mechanical (e.g., clamshell) or hydraulic (e.g., cutterhead, hopper) dredges.
- Multiple sediment types or fractions can be simulated simultaneously.
- Model output consists of concentration contours in both horizontal and vertical planes, time series plots of suspended sediment concentrations, and the spatial distribution of sediment deposited on the sea floor.
- Sediment particle movement and concentration evolution can be animated over Geographic Information System (GIS) layers depicting sensitive environmental resources and areas.

4.6 REFERENCES

Berry, W., Rubenstein, N., Melzian, B., and Hill, B. 2003. *The biological effects of suspended and bedded sediments (SABS) in Aquatic Systems: A review.* Internal report to US EPA, Office of Research and Development, National Health and Environmental Effects Laboratory, Narragansett, RI.

Bohlen, W.F., M.M. Howard-Strobel, D.R. Cohen, and E.T. Morton. 1996. *An Investigation of the Dispersion of Sediments Resuspended by Dredging Operations in New Haven Harbor*. DAMOS Contribution Number 112. US Army Corps of Engineers – New England Division, Concord, MA pp.

Collins, M.A. 1995. *Dredging Induced Near-field resuspended Sediment Concentrations and Source Strengths.* Dredging Operations Technical Support Program misc. paper D-95-2, Prepared for US Army Corps of Engineers, US Army Engineer Waterways Experiment Station, Vicksburg, MS.

Francingues, N. R., and Palermo, M. R. (2005). *Silt curtains as a dredging project management practice*, DOER Technical Notes Collection (ERDC TN-DOER-E21). U.S. Army Engineer Research and Development Center, Vicksburg, MS. http://el.erdc.usace.army.mil/dots/doer/doer.html.

Hayes, D., T. McLellan and C. Truitt. 1988. *Demonstration of innovative and conventional dredging equipment in Calumet Harbor, Illinois.* Miscellaneous Paper EL-88-1. US Army Engineer Waterway Experiment Station (Engineer Research and Development Center), Vicksburg, MS.

Hayes, D. T. Borrowman and D. Averett. 2000.*Near-field turbidityobservations during Boston Harbor bucket comparison study.* Proceedings of WEDA XX, Providence, RI

Hayes, D. and P.-Y. Wu. 2001. *Simple approach to TSS source strength estimates.* Proceedings of the western Dredging Association Twenty-first Conference. And thirty-third Annual Texas A & M Dredging Seminar, Special PIANC Session. Texas A&M University, Center for dredging Studies. Pp 303.

Ludwig, M. 1996. *Barge Overflow: A Controversial Component of Managing the Dredging and Disposal of Sediments.* NOAA/ NMFS, Milford CT

Moshenberg, K.L., 2004. *A Sediment Triad Analysis of Lakes Sammamish, Washington and Union*. Kings County Dept. of Natural Resources and Parks, Water and Land Resources Div. Science Section, Seattle, WA. Pp102

Newcombe, C. P., and Jensen, J. O. T. 1996. *Channel suspended sediment and fisheries: A synthesis for quantitative assessment of risk and impact. North American Journal of Fisheries Management* 16, 693-727.

Rhodes, D.C. and J.D. Germano. 1986. *Interperting long-term changes in Benthic Community Structure; a new protocol*. Hydrobiologia. 142:291-308.

Shilts, W.W., 1974, *Physical and chemical properties of unconsolidated sediment in permanently frozen terrain, District of Keewatin;* Geological Survey of Canada, Paper 74-1A, pp. 229-235.

Seattle District, US Army Corps of Engineers. 2008. Communications with the Hydrosurvey Unit, Operations and Maintenance and Dredged Material Management Office).

Tabor R., C. McCoy, S. Camacho, M. Celedonia, and S. Vecht. 2003. *Habitat use and movements of juvenile Chinook salmon in south Lake Washington, 2003 investigations*. Abstract, 2003 Greater Lake Washington Chinook Salmon Workshop, Seattle Public Utilities, Seattle, Washington.

Tabor, R., A., M. T. Celedonia, F. Mejia, R. M. Piaskowski, D. L. Low, B. Footen and L. Park. 2004a. *PREDATION OF JUVENILE CHINOOK SALMON BY PREDATORY FISHES IN THREE AREAS OF THE LAKE WASHINGTON BASIN*. Abstract and Presentation at 2004 Greater Lake Washington Chinook Workshop, February 2, 2004 Shoreline Center, Shoreline, Washington @ http://www.seattle.gov/util/About_SPU/Management/SPU_&_the_Environment/SalmonFriendlySeattle/SalmonFriendlySeattledocs/SPU01_002681.asp

Tabor, R., C. McCoy, S. Camacho, M. Celedonia, S. Vecht, and M. Timko. 2004b.

Habitat use and movements of juvenile chinook salmon in south Lake Washington, 2003 investigations. Abstract and Presentation at 2004 Greater Lake Washington Chinook Workshop, February 2, 2004 Shoreline Center, Shoreline, Washington @

http://www.seattle.gov/util/About_SPU/Management/SPU_&_the_Environment/SalmonFriendlySeattle/SalmonFriendlySeattledocs/SPU01_002681.asp

Wilber, D. H., Brostoff, W., Clarke, D. G., and Ray, G. L. 2005. *Sedimentation: Potential biological effects from dredging operations in estuarine and marine environments, DOER Technical Notes Collection* (ERDC TN-DOER-E20), U.S. Army Engineer Research and Development Center, Vicksburg, MS. *http://el.erdc.usace.army.mil/dots/doer/doer.html*

Wilber, D. H., and Clarke, D. G. 2001. *Biological effects of suspended sediments: a review of suspended sediment impacts on fish and shellfish with relation to dredging activities in estuaries,* North American Journal of Fisheries Management 21, 429-449.

Federal Highways Administration, Washington State Dept. of Transportation and Sound Transit. 2006. *SR 520 Bridge Replacement and HOV Project Draft Environmental Impact Statement.* FHWA-WA-EIS-06-02-D.

5.0 COST ESTIMATES

5.1 GENERAL

The cost estimate covers the works between Montlake Boulevard and the bridge abutment at the East end of Foster Island. It has been divided into:

- The Montlake Tunnel part between Montlake Boulevard and the Southern Portal, just north of the SR 520 mainline (Section 5.2); and
- The Arboretum Tunnel part, including the ramp area between the Montlake Boulevard Bridge and the Western tunnel portal and the ramps to Lake Washington Boulevard (Section 5.3).

Costs related to additional right of way, wetland mitigation, permit fees, contaminated materials, and utility relocation are not included in the cost estimates.

The construction cost estimates are based on Fiscal Year 2008 dollars.

5.2 BASE COSTS OF TUNNEL AT MONTLAKE

5.2.1 Approach

In development of the cost estimate for the Montlake Tunnel, the following resources were used:

1) Unit cost data solicited from select contractors and material vendors who are experienced with projects of similar scope, magnitude, and complexity;

2) Standard estimating references such as R.S. Means;

3) WSDOT historical cost data; and

4) The Engineer's past experience with costs of similar operations.

The costs of the large number of various components for the Mechanical & Electrical installations have been estimated in a simplified way as a percent of the costs of the civil and structural works for the tunnel. This is based upon historical experience.

In accordance with the cost estimates prepared by WSDOT, the total quantity related costs have been increased by 59.3% in order to account for various general costs, including contractors' mobilization, allowance for sundry minor and unspecified items, preliminary and construction engineering and sales tax.

5.2.2 Results

The results of the cost estimate are summarized in Table 5.1 below. They include the mentioned allowances for general costs. As shown, the total estimated costs are $ 479,000,000.

Item	Component	Tasks	Estimated Costs
(i)	***Ramp, North*** ***(05+50 to 10+30)***	Temporary works and excavation	$ 69,000,000
		Permanent civil and structural works	$ 15,000,000
		Total	**$ 84,000,000**
(ii)	***Cut & Cover Tunnel, North*** ***(10+30 to 17+00)***	Temporary works and excavation	$ 88,000,000
		Permanent civil and structural works	$ 44,000,000
		Mechanical, Electrical & Sundry Items	$ 19,000,000
		Total	**$ 151,000,000**
(iii)	***Immersed Tunnel*** ***(17+00 to 25+40)***	Temporary works and dredging	$ 68,000,000
		Permanent civil and structural works	$ 67,000,000
		Transport, Immersion and Foundation	$ 16,000,000
		Mechanical, Electrical & Sundry Items	$ 21,000,000
		Total	**$ 172,000,000**
(iv)	***Cut & Cover Tunnel, South*** ***(25+40 to 27+80)***	Temporary works and excavation	$ 42,000,000
		Permanent civil and structural works	$ 22,000,000
		Mechanical, Electrical & Sundry Items	$ 8,000,000
		Total	**$ 72,000,000**
	Total, all works		**$ 479,000,000**

Table 5.1. Summary of cost estimate for the Montlake Tunnel part of Proposal K.

5.3 BASE COSTS OF TUNNEL AT THE ARBORETUM

5.3.1 Approach

For the Arboretum Tunnel, including ramp area on each side and the ramps connecting to Lake Washington Boulevard, the cost estimate is done in a simplified manner by survey of the areas of the tunnel, ramp, etc. and use of the characteristic costs per unit area, derived from the detailed cost estimate for Proposal G.

These are described in the report *"Seattle SR 520, Proposal G - Arboretum Tunnel. Conceptual Design and Cost Estimate"* prepared by OCC for the Keystone Center.

The deep ramp area at Montlake between the lid and the portals for the two tunnels is, however, somewhat different from the ramps investigated for Proposal G2. The unit cost for this ramp has been increased by a roughly estimated factor and is considered relative uncertain.

Typical unit area costs for bridge sections (there are two short bridges for the main road across the deep ramp area) and lids (including structure above roadway, landscaping, paths and urban design applications) have been chosen in line with cost estimates prepared by WSDOT.

5.3.2 Results

The estimated costs of the referred parts of the road are listed in Table 5.2. The totals costs are estimated at $1,368,000,000.

Item	Component	Estimated Costs
(i)	***West Ramp Section with retaining walls and Lid***	$87,000,000
(ii)	***Deep Ramp Area between Lid and West Tunnel Portal***	$162,000,000
(iii)	***Enclosed Tunnel***	$ 811,000,000
(iv)	***Pile Foundation***	$ 130,000,000
(v)	***East Tunnel Approach Ramp***	$ 58,000,000
(vi)	***Existing SR 520 Bridge removal***	$ 54,000,000
	Total Main Road	**$1,302,000,000**
(vii)	***Ramps to Lake Washington Boulevard***	$ 66,000,000
	Total incl. ramps to Lake Washington Boulevard	**$1,368,000,000**

Table 5.2. Summary of Cost Estimate for the Arboretum Tunnel part of Proposal K

5.4 TOTAL COSTS

5.4.1 General

The estimated Base Costs shown in Section 5.2 and 5.3 refer to the present cost level and should, in accordance with WSDOT practice, be increased to allow for the "year of expenditure" price level and to take into account the effects of risks, including:

- Construction costs price escalations above the assumed general inflation rate;
- Under estimation of quantities or unit costs; and
- Special mishaps or accidents which could cause additional costs and delays, including as well the costs due to resulting increased construction time.

Whereas the relative effect for many of the major risk such as construction costs price escalations will be similar for tunnel and bridge solutions, it will also be necessary to identify and address the particular risks applying to a tunnel project.

These would include accidental events such as:

- Failure to control groundwater, implying accidental flooding of the cofferdam; and
- Soil movements from a failed sheet pile wall for the excavation close to the bridge will impact on the bridge piles.

It is recommended that a construction risk assessment be carried out at a future stage with the aim to identify and assess all thinkable risks for the tunnel construction. Important risks, as deemed from assessment of their likelihood and possible consequences should then be further addressed by mitigation measures.

Following subsequent implementation of such appropriate measures in the design and the planning of the project, it will typically be deemed that the residual risk for accidental events is ignorable.

The total project costs, including allowance for the risks, can, in turn, be quantified from statistical methods such as a "Monte Carlo" simulation.

At the present stage, it is on the background of WSDOT's previous work with the bridge project, assumed that the Base Costs shall be increased with a Risk Assessment Factor of 1.5 in order to allow for price escalation to the year-of-expenditure and risk events that impact cost and/or schedule.

However, this figure does not reflect the Governor's recent request to WSDOT to accelerate the time schedule which will imply a reduction of the factor.

5.4.2 Results including Price Escalation and Risks

The total project costs at the Year-of -Expenditure; derived as 1.5 times the Base Costs are shown in Table 5.3.

The total estimated costs of the works between Montlake Boulevard and the bridge abutment at the East end of Foster Island are $ 2,770,000,000.

Main Component	Base Costs	Project Costs at year-of-expenditure
Montlake Tunnel part incl. North ramp	$ 479,000,000	$718,000,000
Arboretum Tunnel part incl. West and East ramps	$1,302,000,000	$1,953,000,000
Lake Washington Boulevard ramps	$ 66,000,000	$ 99,000,000
Total Costs	**$1,847,000,000**	**$2,770,000,000**

Table 5.3 Comparison of total project costs at year-of-expenditure for the Proposal G variants.

In comparison, the Base Costs of variant G2 of Proposal G, with maximum tunnel length and interchange ramps to Lake Washington Boulevard, were estimated at $ 1,208,000,000 and the project costs at year-of-expenditure were at $ 1,812,000,000.