Electrical Design class

Installing electrical conduit in bridges & structures

Presented by: Terry Thayer

WSDOT HQ Traffic Office

Fall / Winter 2004

Introduction

- This class will present you with the details required to design, review or install conduit, junction boxes, ITS(SC&DI) camera pole or luminaire bases, traffic loops or other electrical system components into or on a bridge or structure.
- Provide two 2” dia. conduits in bridge or structure, keep conduits electrically separated from each other, from grade at beginning of bridge to grade at end of bridge.

Introduction - continued

- provide expansion & deflection fittings as required and terminate each conduit off structure in a junction box.
- Provide one or two 4” dia. ITS(SC&DI) conduits across structure & terminate in pull box in grade at each end of structure.
- NOTE: install ITS conduit only if part of ITS(SC&DI) system plan.

Rules

- by agreement w/ Bridge & Structures group:
- conceal all electrical equipment within new structure.
- on existing structures place equipment under structure where possible.
- or, when installing equipment in view of traffic, try to hide equipment in form lines.

Rules - continued

- provide one set of two junction boxes in the traffic barrier every 180’ center to center across bridge or structure.
- place one set of junction boxes in the second and third dummy joint barrier section at beginning & end of bridge rail.
- space each set of junction boxes eight feet apart
- conduit enters end of junction boxes only.
- label junction boxes, in ascending roadway stationing, TS and then LT.

Rules - continued

- provide a junction box within ten feet of stub out for traffic loop, luminaire pole, ITS(SC&DI) camera pole, etc.
- Bridge group will calculate movement within structure & provide design locations for expansion, deflection and expansion / deflection fittings.
- place deflection fitting in retaining walls near the transverse construction joint (cold construction joint) in the footing, 120’ spacing maximum.

Deflection Fitting - DX

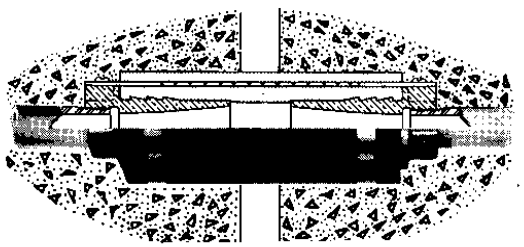

Installation in Concrete

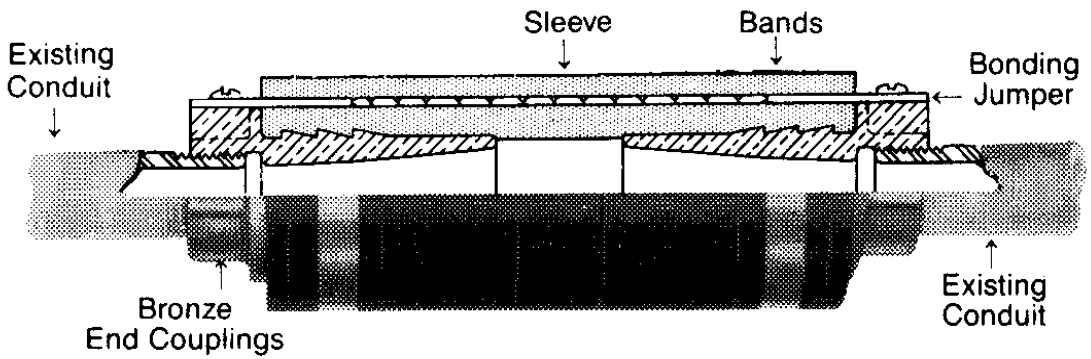

A Deflection Fitting (DX) allows for 30 degrees of bend in any direction and 3/4 inch of expansion or contraction.

Deflection Fittings–(DX)

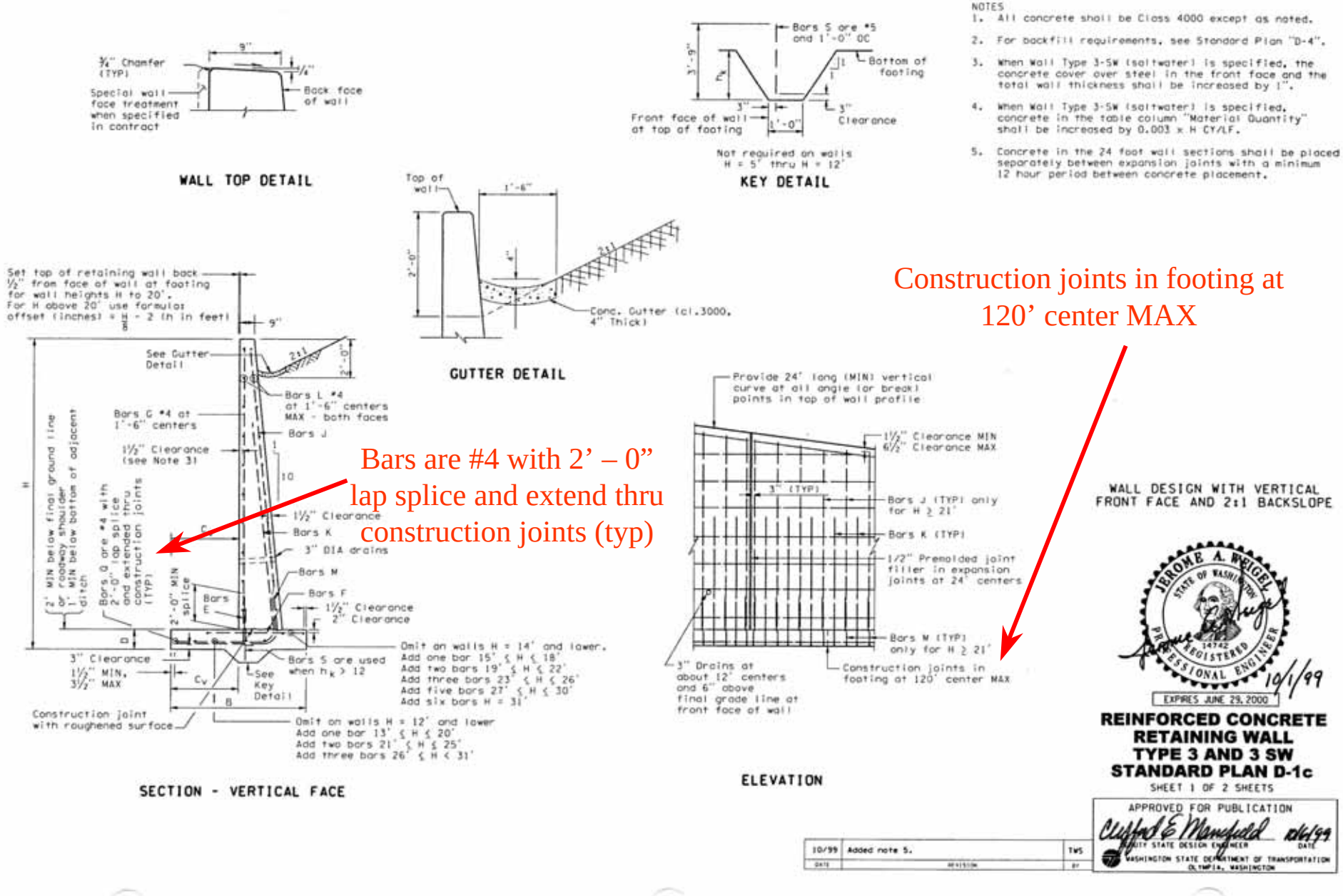
WALL TOP DETAIL
KEY DETAIL
GUTTER DETAIL
SECTION - VERTICAL FACE
ELEVATION
NOTES
1. All concrete shall be Class 4000 except as noted.
2. For backfill requirements, see Standard Plan "D-4".
3. When Wall Type 3-SW (saltwater) is specified, the concrete cover over steel in the front face and the total wall thickness shall be increased by 1".
4. When Wall Type 3-SW (saltwater) is specified, concrete in the table column "Material Quantity" shall be increased by 0.003 x H CY/LF.
5. Concrete in the 24 foot wall sections shall be placed separately between expansion joints with a minimum 12 hour period between concrete placement.
Construction joints in footing at 120' center MAX
Bars are #4 with 2' – 0" lap splice and extend thru construction joints (typ)
WALL DESIGN WITH VERTICAL FRONT FACE AND 2:1 BACKSLOPE
JEROME A. WEIGEL
STATE OF WASHINGTON
14742
REGISTERED
PROFESSIONAL ENGINEER
10/1/99
EXPIRES JUNE 29, 2000
REINFORCED CONCRETE RETAINING WALL TYPE 3 AND 3 SW STANDARD PLAN D-1c
SHEET 1 OF 2 SHEETS
APPROVED FOR PUBLICATION
Clifford E. Mansfield 10/1/99
DEPUTY STATE DESIGN ENGINEER
DATE
WASHINGTON STATE DEPARTMENT OF TRANSPORTATION
OLYMPIA, WASHINGTON
10/99 Added note 5. TWS
DATE REVISION BY

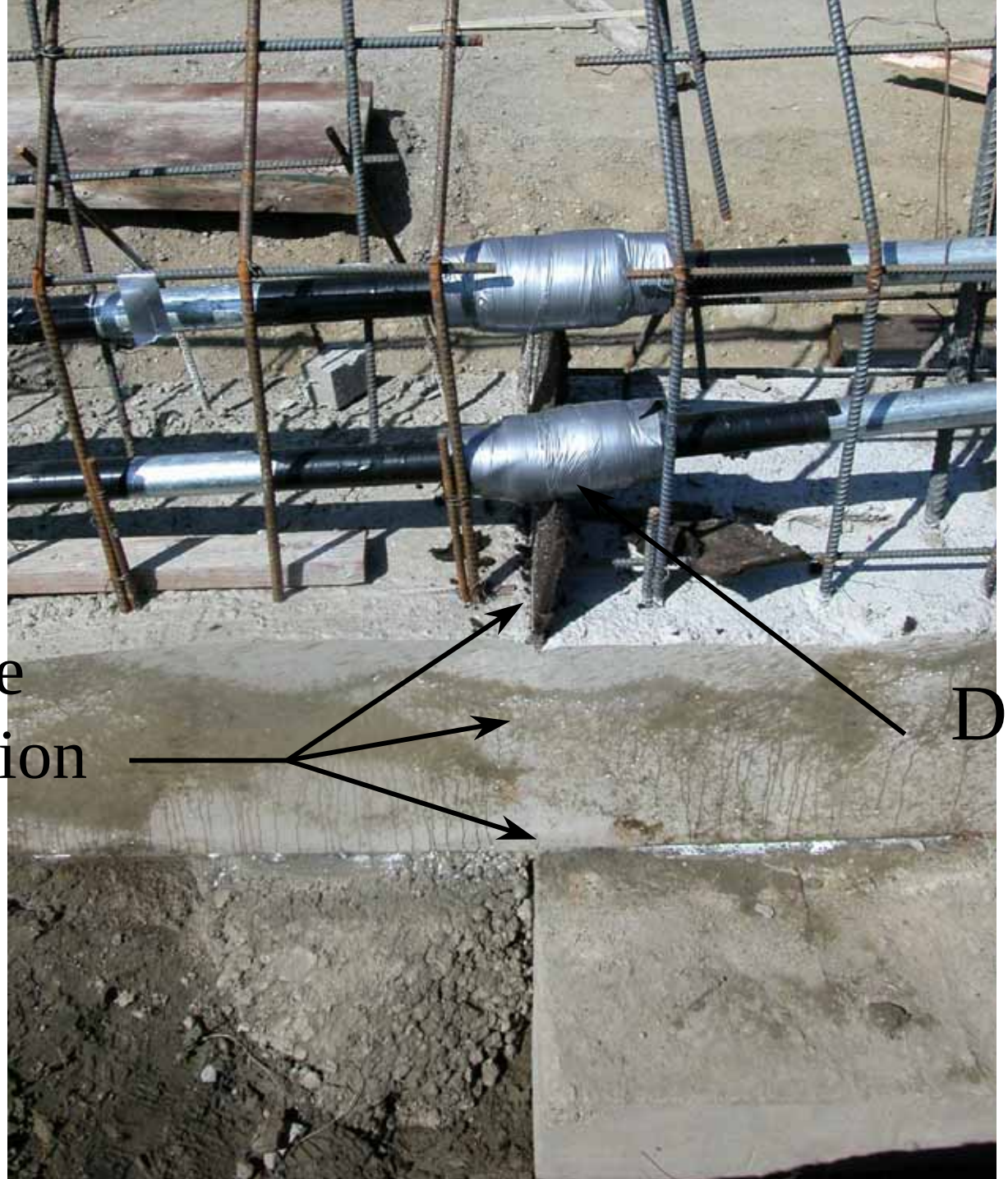
transverse
construction
joint
Deflection
Fitting
Detail B
(DX)

Deflection Fitting Detail B-(DX)

Conduit Expansion fitting – (AX)

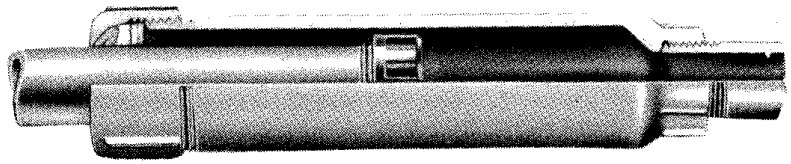

Type AX-8
Provides for 8″ Conduit Movement

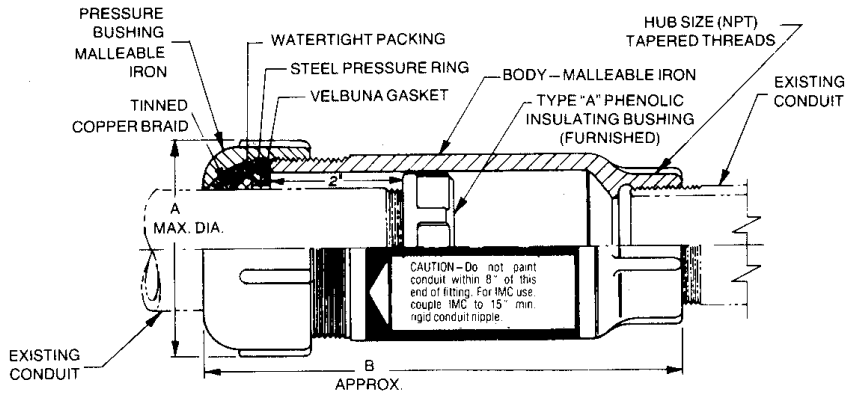

Type AX Provides for 4″ Conduit Movement

Bonding Jumper — 14″

An Expansion Fitting (AX) allows for 4 inches of conduit movement - 2 inches in either direction normal to the conduit.

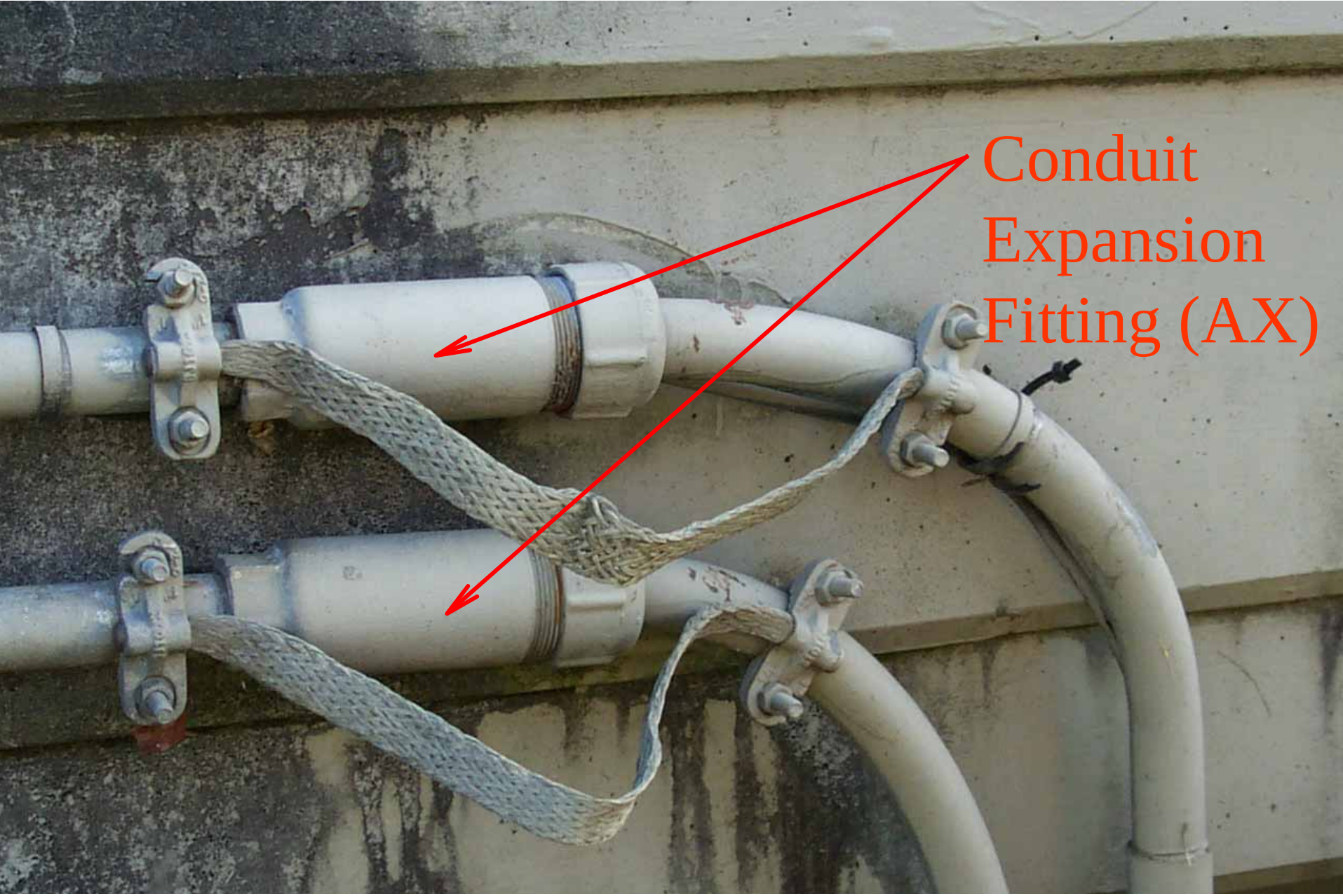
Conduit
Expansion
Fitting (AX)

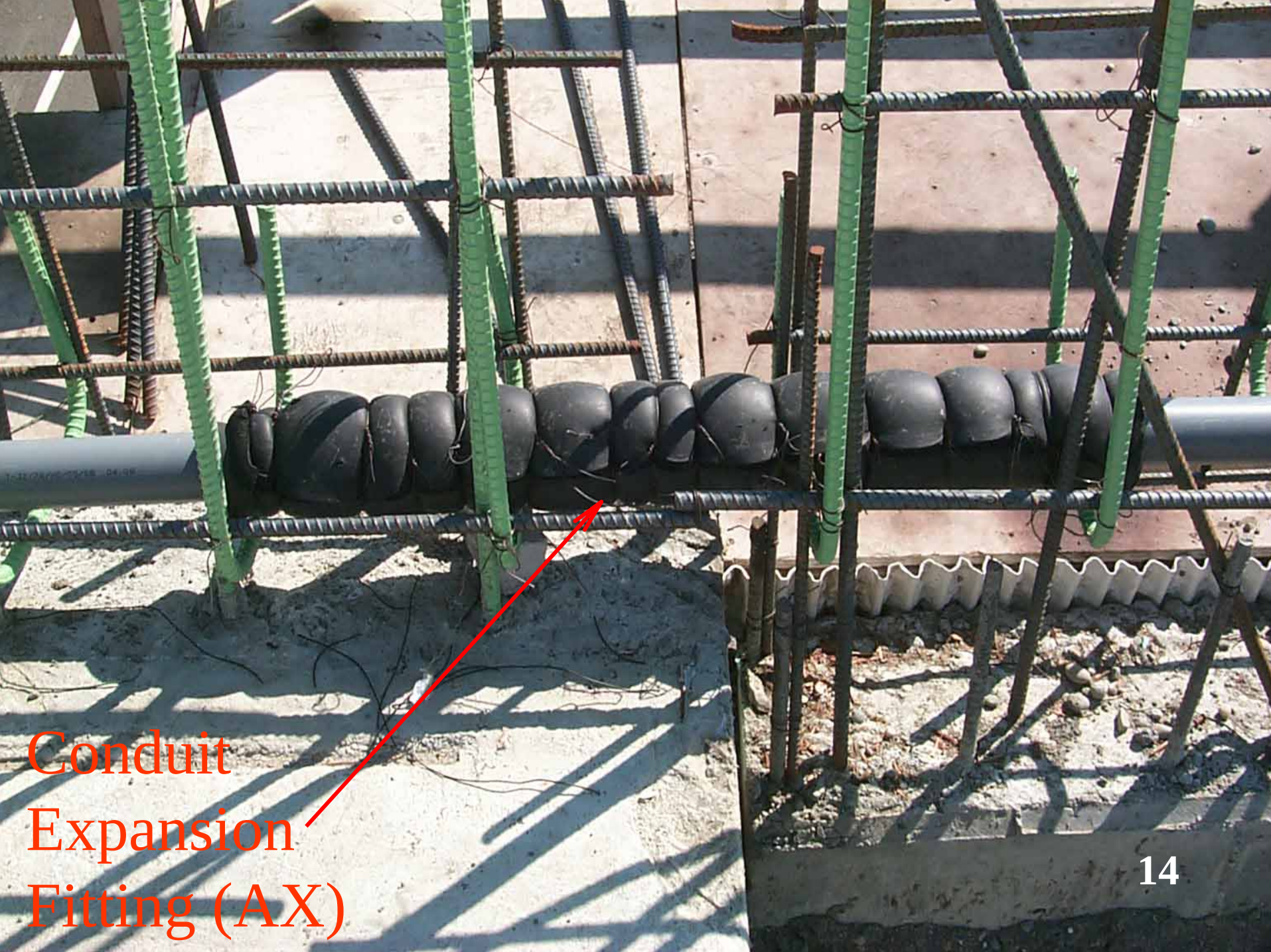
Conduit
Expansion
Fitting (AX)

Expansion / Deflection fitting - AX/DX

Note: the blockout cast for the deflection fitting is cast in one side of the structure only.

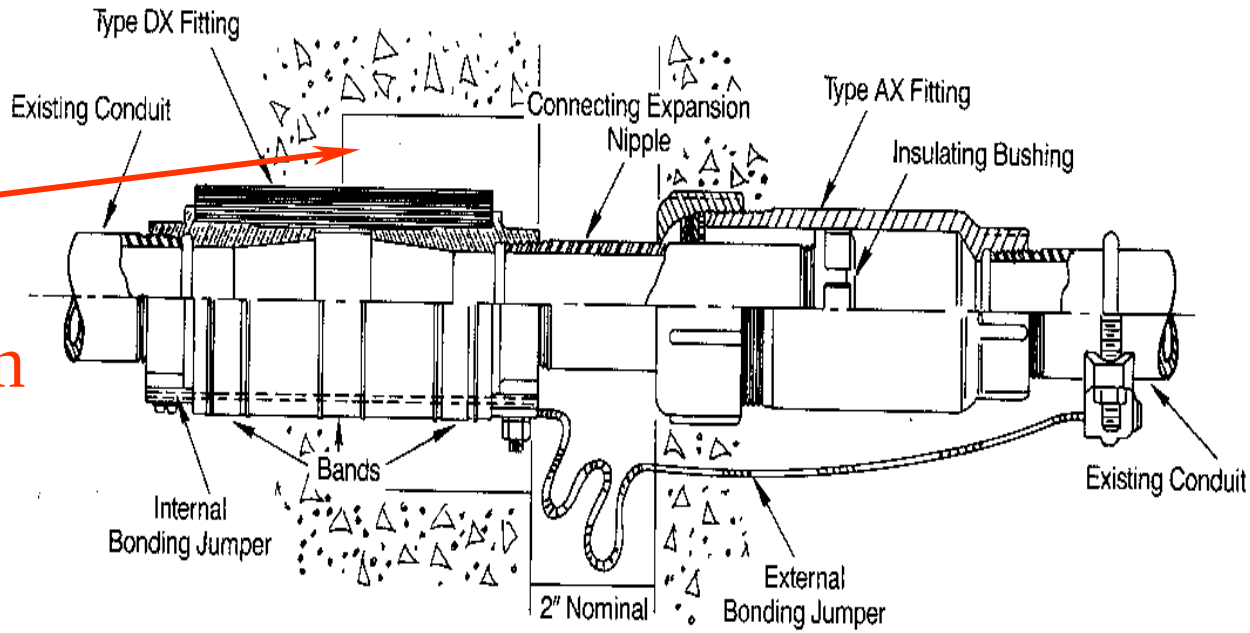

Expansion / Deflection fitting allows for 3/4 inch of expansion or contraction and 30 degrees of bend in any direction and allows for 4 inches of conduit movement - 2 inches in either direction normal to the conduit. Total expansion or contraction is 2 3/4”.

Rigid Metal Conduit

- conduit is sized using nominal trade size.
- see table table 4, chapter 9 NEC - 2002 for listed inside diameter of Rigid Metal Conduit,

  PVC Schedule 40 & PVC Schedule 80.
- see ASTM table X2.2, A 53 (STD size) for outside diameter of RMC (or see any supplier catalog).
- American National Standards Institute (ANSI) C80.1 – 1990 for Rigid Steel Conduit – Zinc Coated

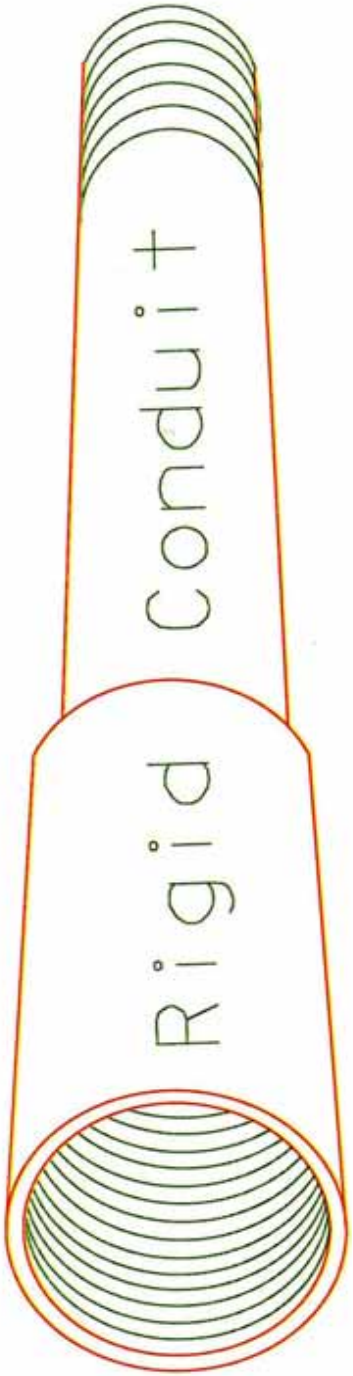

Nominal or trade size of conduit in	Customary inch-pound units				
	Nominal inside diameter in	Outside diameter in	Nominal wall thickness in	Length without coupling ft and in	Minimum weight of ten unit lengths with couplings attached lb
3/8	0.493	0.675	0.091	9'11 -1/2"	51.5
1/2	0.632	0.840	0.104	9'11 -1/4"	79.0
3/4	0.836	1.050	0.107	9'11 -1/4"	105.0
1	1.063	1.315	0.126	9'11"	153.0
1 -1/4	1.394	1.660	0.133	9'11"	201.0
1 -1/2	1.624	1.900	0.138	9'11"	249.0
2	2.083	2.375	0.146	9'11"	332.0
2 -1/2	2.489	2.875	0.193	9'10 -1/2"	527.0
3	3.090	3.500	0.205	9'10 -1/2"	682.6
3 -1/2	3.570	4.000	0.215	9'10 -1/4"	831.0
4	4.050	4.500	0.225	9'10 -1/4"	972.3
5	5.073	5.563	0.245	9'10"	1313.6
6	6.093	6.625	0.266	9'10"	1745.3

NOTE –Applicable tolerances:

Length: ± 1/4 in (± 6.35 mm) (without coupling)

Outside diameter
for trade sizes 3/8 in through 2 in: ± 0.015 in (± 0.38 mm)
for trade sizes 2-1/2 in through 4 in: ± 0.025 in (± 0.64 mm)
for trade sizes 5 and 6 in: ±1%

Wall thickness: See 7.3.

American National Standards Institute (ANSI) C80.1 – 1990 for Rigid Steel Conduit – Zinc Coated

Conduit Bodies (condulets)

- There are different types for use with each type conduit.
- WSDOT uses Rigid Metal Conduit.
- These conduit bodies are for use with both types.
- IMC is abbreviation for Intermediate metal conduit - not allowed for use in our specification.
- there are other types - see any conduit supply catalog for specifics if other type needed.
- our plans would usually only call out for a “condulet”, not a specific Type i.e.: “LB”.

Form 35® Malleable Iron Unilet® Conduit Outlet Bodies

Threaded Type for use with Rigid Metal Conduit and IMC;
Compression Type for use with Threadless Rigid Metal Conduit.

Appleton Form 35® Threaded Type Conduit Bodies NOTE: Refer to page A-16 for Wiring Capacity Tables

Hub Size (in.)	C	E	LB	LL	LR
1/2	C50-M	E50-M	LB50-M	LL50-M	LR50-M
3/4	C75-M	E75-M	LB75-M	LL75-M	LR75-M
1	C100-M	E100-M	LB100-M	LL100-M	LR100-M
1-1/4	C125-M◊	E125-M	LB125-M◊	LL125-M	LR125-M
1-1/2	C150-M◊	E150-M	LB150-M◊	LL150-M	LR150-M
2	C200-M◊	—	LB200-M◊	LL200-M	LR200-M
2-1/2	C250-M◊	—	LB250-M◊	LL250-M	LR250-M
3	C300-M◊	—	LB300-M◊	LL300-M	LR300-M
3-1/2	C350-M◊	—	LB350-M◊	LL350-M	LR350-M
4	C400-M◊	—	LB400-M◊	LL400-M	LR400-M
5	—	—	LB500-M	—	—
6	—	—	LB600-M	—	—

Hub Size (in.)	LRL*	T	TA	TB	X
1/2	LRL50-M	T50-M	TA50-M	TB50-M	X50-M
3/4	LRL75-M	T75-M	TA75-M	TB75-M	X75-M
1	LRL100-M	T100-M	TA100-M	TB100-M	X100-M
1-1/4	LRL125-M	T125-M	—	TB125-M	X125-M
1-1/2	LRL150-M	T150-M	—	TB150-M	X150-M
2	LRL200-M	T200-M	—	TB200-M	X200-M
2-1/2	—	T250-M	—	—	—
3	—	T300-M	—	—	—
3-1/2	—	T350-M	—	—	—
4	—	T400-M	—	—	—

*LRL Unilets have double opening and are furnished with one steel cover, assembled.
◊ Catalog numbers having patented roller feature, all others do not.

Compression Type—For use with Threadless Rigid Metal Conduit

Hub Size (in.)	LB	LRL*	T
1/2	LB50N-M	LRL50N-M	T50N-M
3/4	LB75N-M	LRL75N-M	T75N-M
1	LB100N-M	LRL100N-M	T100N-M

Back Style for Form 35 Unilet conduit body sizes (inches)

Unilet Body	Flat Back	Round Back
C, LB	1/2 - 2	2-1/2 and up
E	1/2 - 1-1/2	1-1/4 and up
LL, LR, T	1/2 - 2	2-1/2 and up
TB	1-1/4, 1-1/2	1/2, 3/4, 1, 2
X	1/2 - 1	1-1/4 and up

All TA Unilets are round back design.
All Compression Type are flatback design.

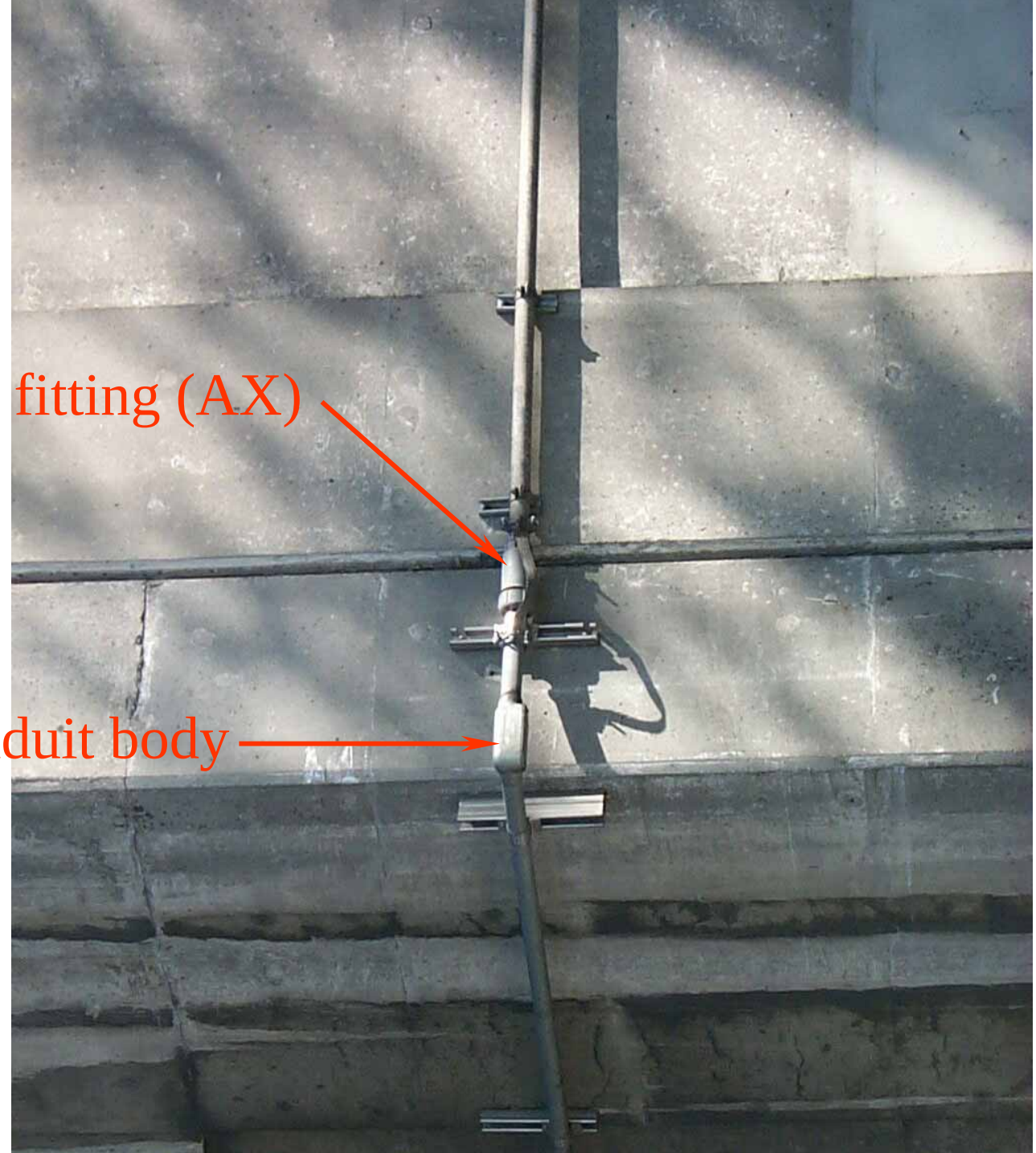
Expansion fitting (AX)
Conduit body

Bridge definitions

- **Superstructure** - upper portion of a bridge - paid as lump sum.
- **Substructure** (PIER)-lower portion of a bridge - paid at unit bid prices.

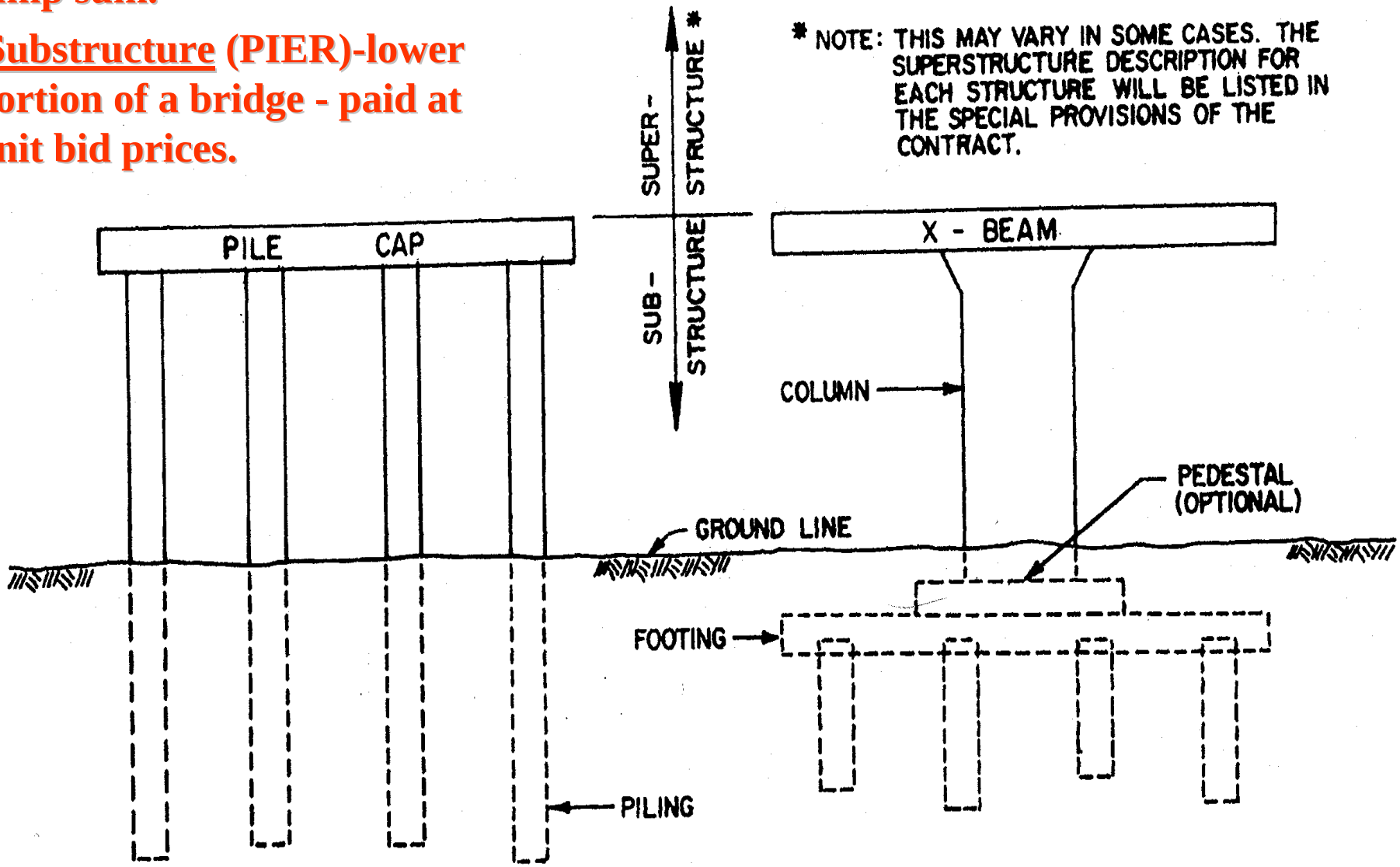

Bridge abutments (end pier)

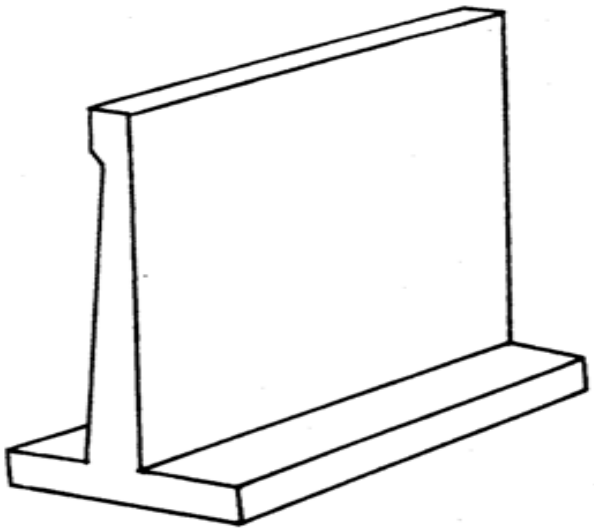

Wall Type Pier

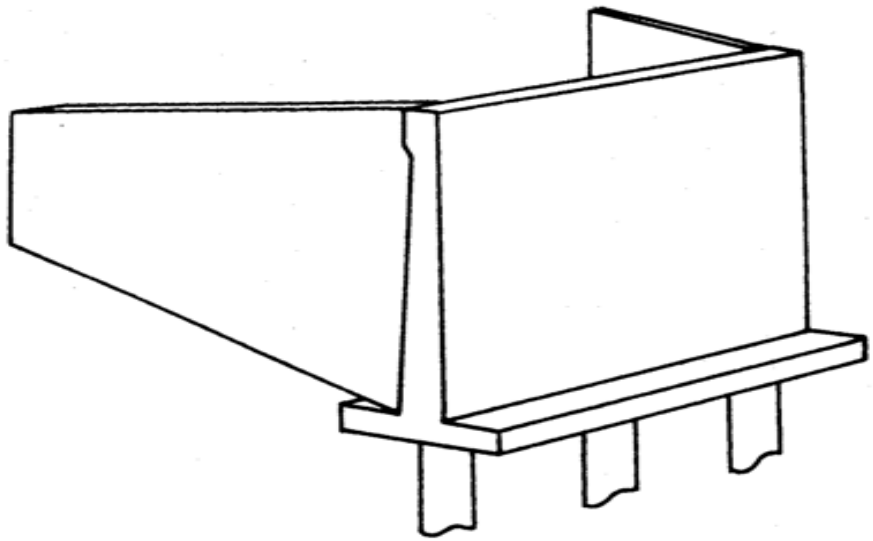

Abutment Pier

The bridge abutments are designed to both support the bridge & contain the earth fill at each end of the bridge. (See contract plans reading course chapter 5 for further discussion of bridge layout and definitions).

Traffic Design Construction Notes

- 39. TS 40. LT 41. COMM 42. ITS(SC&DI)
- 82. General note: Junction box labeling shown for structures only. Label all other junction boxes per standard plan J-11a and special provisions.
- Use these notes on Illumination, Traffic Signal, Power supply or ITS(SC&DI) sheets as required.
- Use notes only on sheets that have conduit passing through structure.
- The intention of these notes is to define how you want to label the junction boxes across the structure.

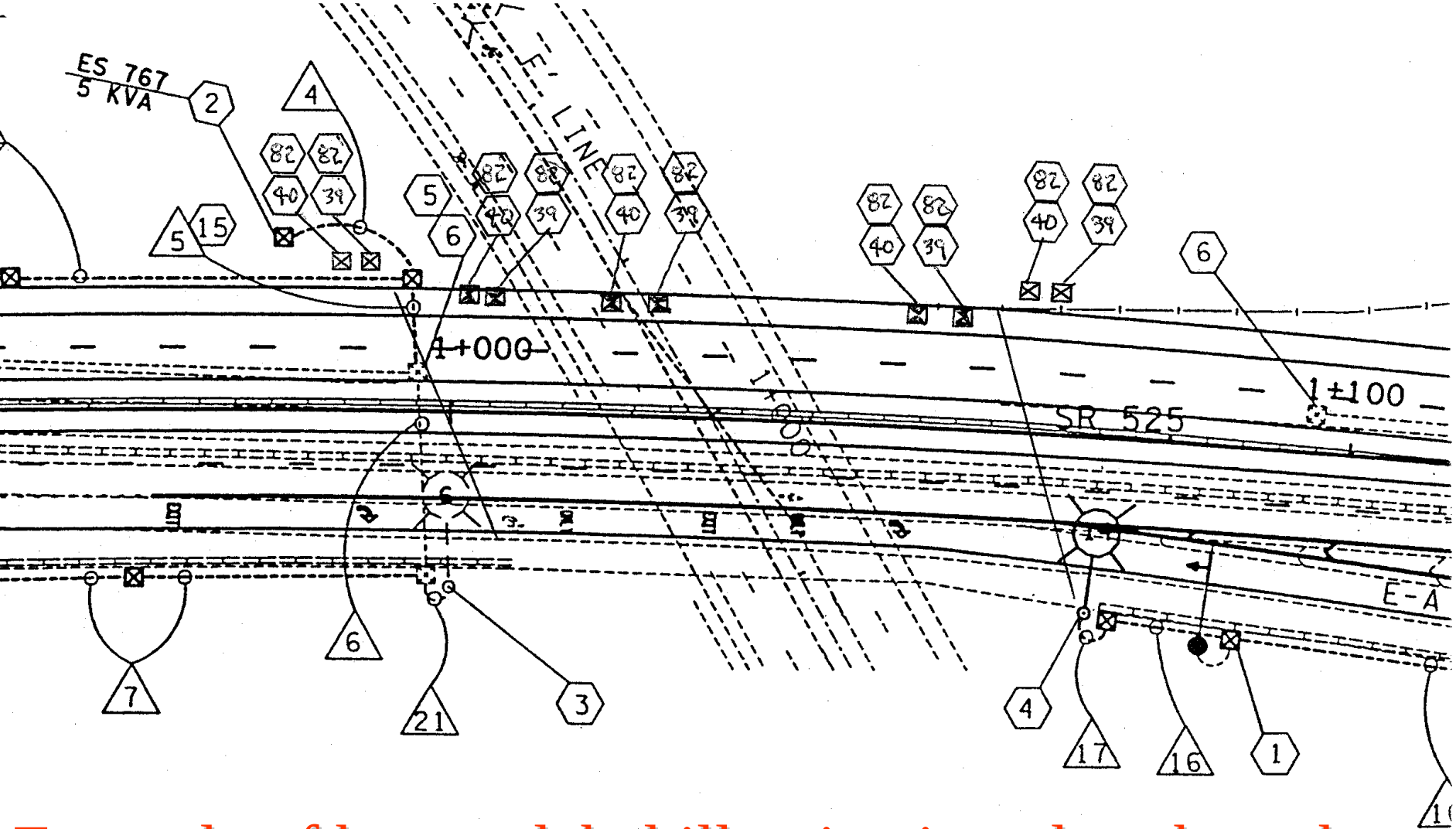

Example of how to label illumination plan sheet that details conduits crossing structure & labeling of junction boxes on structure and in grade off structure.

Traffic Barrier sheet 1 of 3

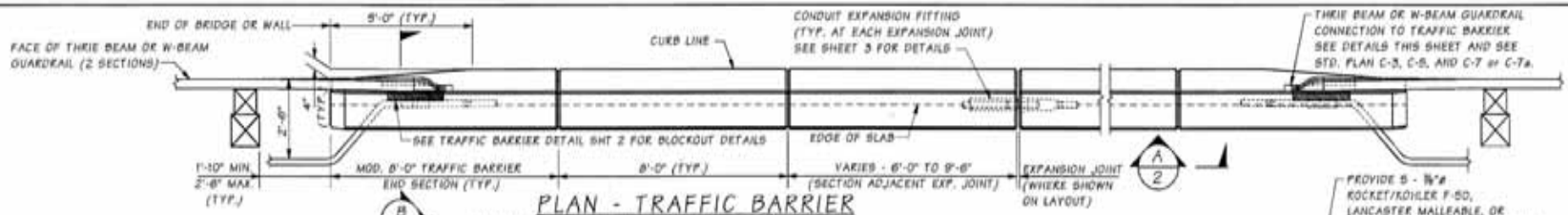

PLAN - TRAFFIC BARRIER

BARRIER CONTINUOUS BETWEEN ROADWAY EXPANSION JOINTS.
CONSTRUCTION JOINTS WITH SHEAR KEYS ARE PERMISSIBLE AT DUMMY JOINT LOCATIONS.
FORM JOINTS BETWEEN DUMMY JOINTS SHALL NOT BE PERMITTED.

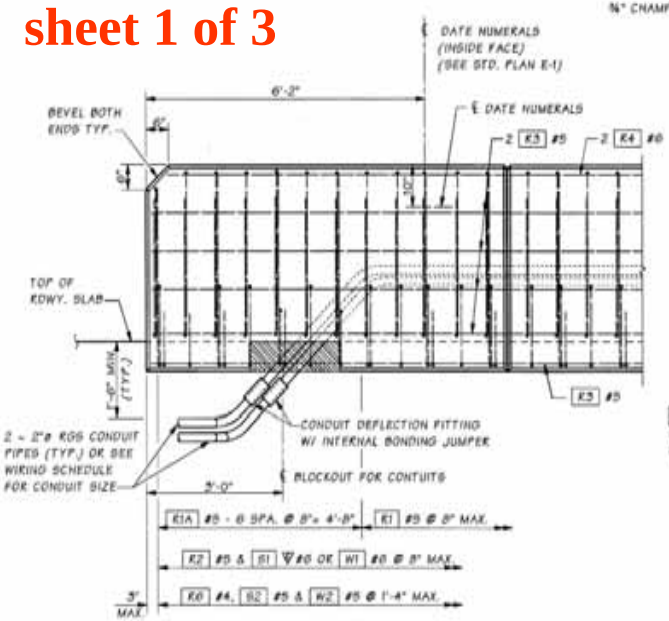

OUTSIDE ELEVATION END OF MODIFIED TRAFFIC BARRIER

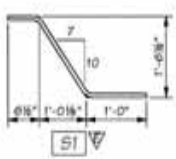

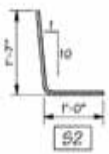

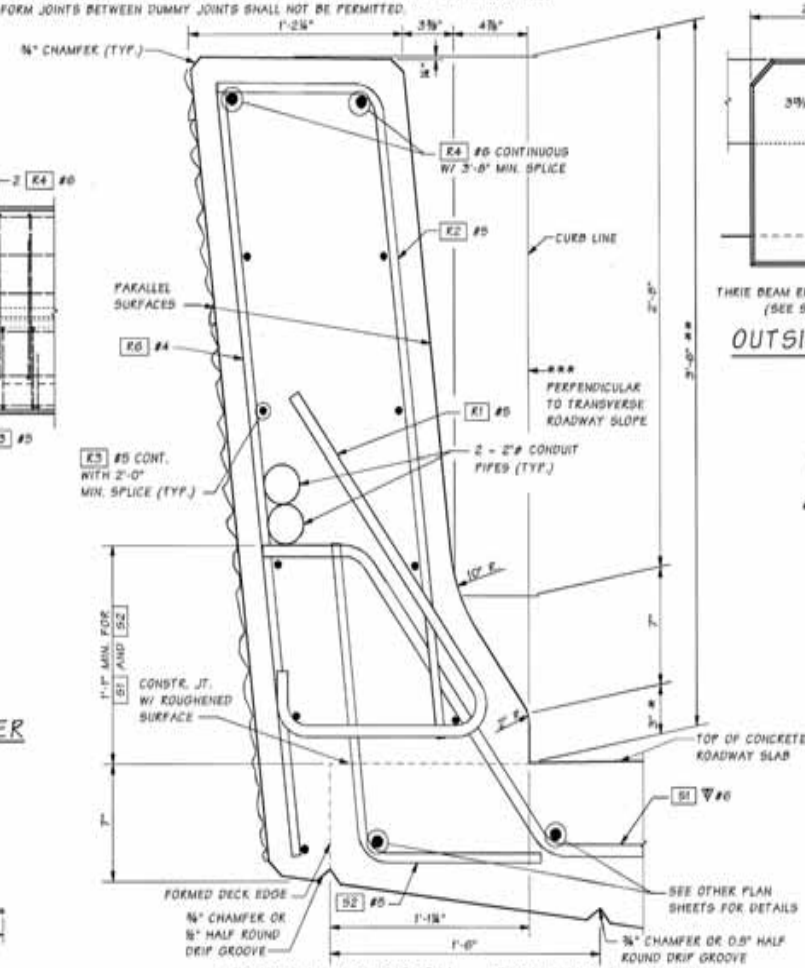

TYPICAL SECTION - TRAFFIC BARRIER

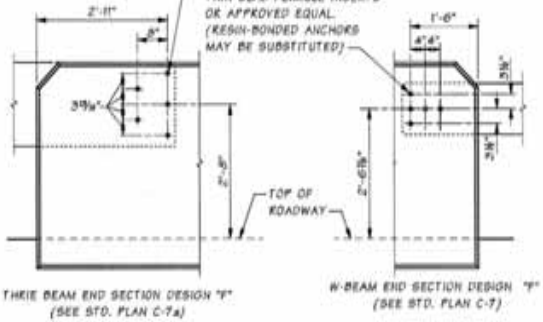

OUTSIDE ELEVATION TRAFFIC BARRIER GUARDRAIL CONNECTION

(WHERE SHOWN ON LAYOUT)

* TOE HEIGHT MAY VARY, 2" MIN. TO 6" MAX.

** HEIGHT MAY VARY IF REQUIRED TO PROVIDE A PROFILE PLEASING TO THE EYE

*** FOR TRANSVERSE ROADWAY SLOPES GREATER THAN 8%, CHANGE THE NOTE TO THE FOLLOWING:
FOR THE LOW SIDE OF THE BRIDGE OR MEDIAN BARRIER - "PERPENDICULAR TO 8% TRANSVERSE ROADWAY SLOPE"
FOR THE HIGH SIDE OF THE BRIDGE BARRIER - "PERPENDICULAR TO TRANSVERSE ROADWAY SLOPE"

NOTE TO DESIGNERS

If transverse roadway slope is greater than 8%, S1 & S2 bar bends need to be modified to account for the difference between the actual slope & 8% on the low side only of the bridge or median barrier. The barrier geometry needs to be checked also.

NW REGION:
TERMINATE EACH CONDUIT PIPE AT SEPARATE TYPE 1 JUNCTION BOXES OFF END OF BRIDGE AS SHOWN ON LAYOUT.

ALL OTHER REGIONS:
STUB OUT & CAP 3'-4" FROM END OF BRIDGE BARRIER, EXCEPT TERMINATE IN JUNCTION BOX WHERE AND WHEN SHOWN ON LAYOUT.

Note to Designer: The non-applicable text should be removed from the actual bridge plans.

Bridge Design Engr.	M:\BRIDGELIB\Master6\Standards\Traffic Barriers\Shape F\42IN SHAPE F BARRIER SHT 1.MAR								
Supervisor					REGION NO.	STATE	FED. AID PROJ. NO.	SHEET NO.	TOTAL SHEETS
Designed By					10	WASH			
Checked By					JOB NUMBER				
Detailed By									
Bridge Projects Engr.									
Prelim. Plan By									
Architect/Specialist	DATE	REVISION	BY	APPD					

BRIDGE AND STRUCTURES OFFICE

Washington State Department of Transportation

STANDARD TRAFFIC BARRIERS 25

TRAFFIC BARRIER - 42" SHAPE "F" DETAIL 1 OF 3

BRIDGE SHEET NO. 1 OF

Thu Jun 10 15:12:57 2004

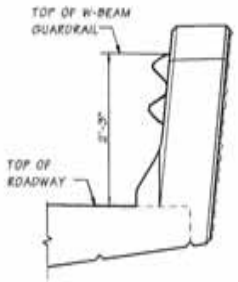

END VIEW
W-BEAM SHOWN WITH "D" CONNECTION

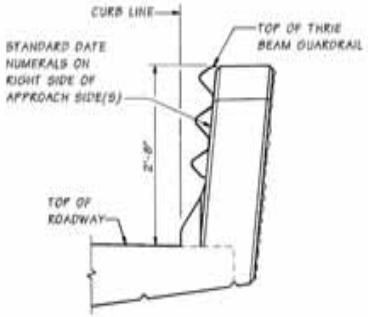

END VIEW
THRIE BEAM SHOWN WITH "D" CONNECTION

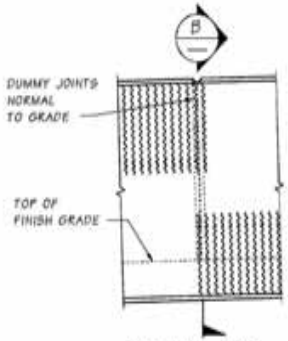

VIEW A/1
ALL CHAMFERS ¾"

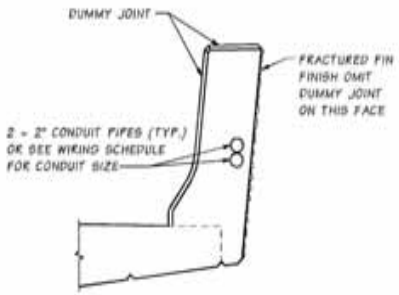

SECTION B

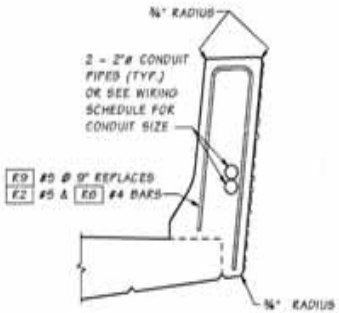

SLIPFORM ALTERNATE
SEE "TYPICAL SECTION - TRAFFIC BARRIER" FOR ADDITIONAL DETAILS

THE CONTRACTOR IS ADVISED THAT THE SLIPFORM CONSTRUCTION METHOD IS A PATENTED PROPRIETARY PROCESS FOR BARRIERS WITH A FRACTURED FIN FINISH.

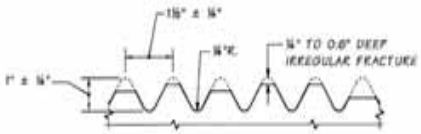

FRACTURED FIN FINISH

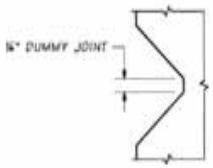

DUMMY JOINT DETAIL

Traffic Barrier sheet 2 of 3

JUNCTION BOX LOCATIONS	
STATION	OFFSET

TRAFFIC BARRIER BAR LIST

ALL REINFORCING SHALL BE AASHTO M31, GR. 60.

MARK	SIZE	LENGTH	BENDING DIAGRAM (ALL DIMENSIONS ARE OUT TO OUT)
K1	5	5'-8"	
K1A	5	(A)	
K2	5	2'-11"	
K3	4	(A)	STR.
K4	6	(A)	STR.
K6	4	5'-0"	STR.
K9	5	5'-11"	

(A) DETERMINE FROM PLAND

* DIMENSIONS TO POINTS OF INTERSECTION

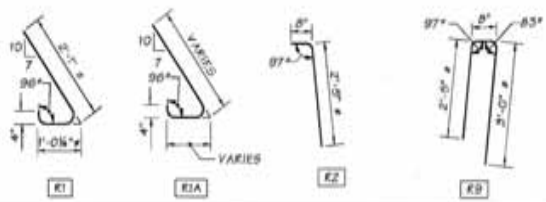

FOR W1 & W2 BARS SEE WINGWALL OR RETAINING WALL PLANS.
FOR S1 & S2 BARS SEE BARLIST

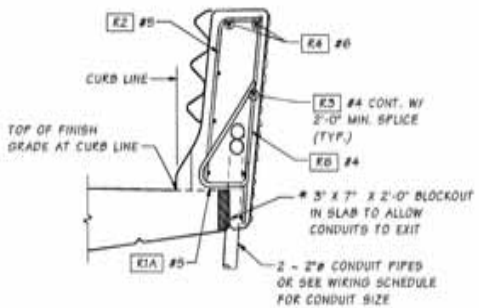

SECTION B/? BRIDGE

FOR DETAILS NOT SHOWN SEE "OUTSIDE ELEVATION" AND "TYPICAL SECTION - TRAFFIC BARRIER"

* BLOCKOUT WIDTH MAY BE INCREASED TO 6" TO ALLOW CONDUITS OF A LARGER DIAMETER THAN 2" TO EXIT BARRIER OR WALL WITHOUT REBAR STEEL CONFLICT

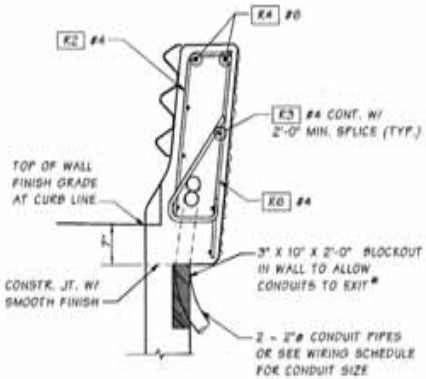

SECTION B/? WALL

DETAIL FOR RETAINING WALL OR WINGWALL. FOR REINFORCING NOT SHOWN SEE STD. PLAN D-1a & D-1b OR WINGWALL PLAN. FOR DETAILS NOT SHOWN SEE SECTION B/? BRIDGE

Bridge Design Engr.	M:\BRIDGE\LIB\Master6\Standards\Traffic Barriers\Shape F\SHAPE F BARRIER SHT 2.mas								
Supervisor					REGION NO.	STATE	FED. AID PROJ. NO.	SHEET NO.	TOTAL SHEETS
Designed By					10	WASH			
Checked By					JOB NUMBER				
Detailed By									
Bridge Projects Engr.									
Proj. Plan By									
Architect/Specialist	DATE	REVISION	BY	APPD					

BRIDGE AND STRUCTURES OFFICE

Washington State Department of Transportation

STANDARD TRAFFIC BARRIERS

TRAFFIC BARRIER - F-SHAPE DETAIL 2 OF 3

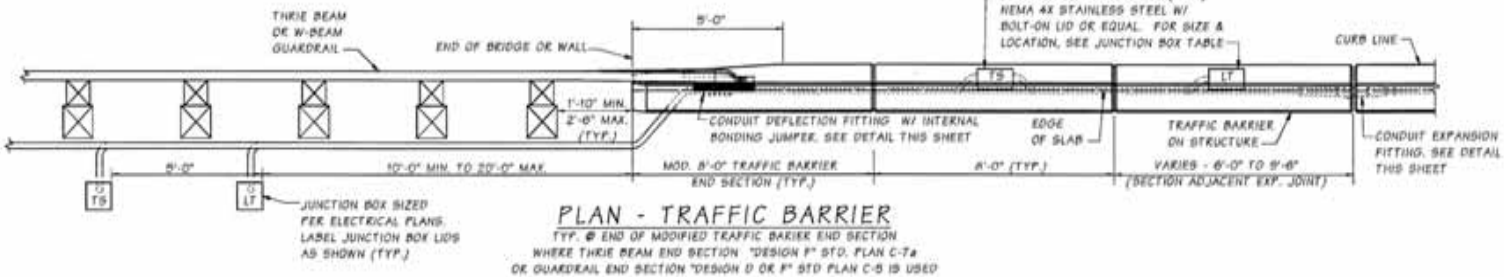

PLAN - TRAFFIC BARRIER

TYP. @ END OF MODIFIED TRAFFIC BARIER END SECTION WHERE THRIE BEAM END SECTION "DESIGN F" STD. PLAN C-7a OR GUARDRAIL END SECTION "DESIGN D OR F" STD PLAN C-8 IS USED

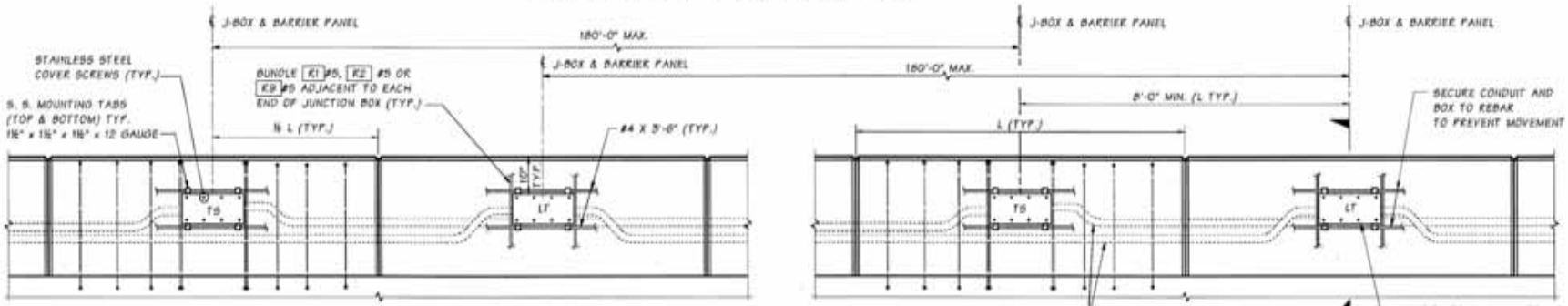

ELEVATION - CONDUITS & J-BOX IN TRAFFIC BARRIER

LABEL JUNCTION BOX COVER IN ACCORDANCE WITH STANDARD PLAN J-11a AND SPECIAL PROVISIONS. ADJACENT JUNCTION BOXES ARE SHOWN CENTERED BETWEEN ADJACENT DUMMY JOINTS. IF THE DISTANCE BETWEEN ADJACENT DUMMY JOINTS IS 16'-0" OR GREATER, PLACE ADJACENT JUNCTION BOXES SYMMETRICALLY ON EITHER SIDE OF THE CENTER OF ONE DUMMY PANEL WHILE MAINTAINING 8'-0" MINIMUM BETWEEN CENTER LINES OF THE JUNCTION BOXES.

Traffic Barrier sheet 3 of 3

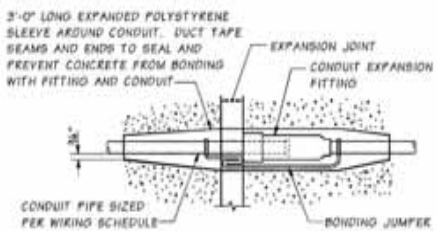

CONDUIT EXPANSION FITTING

CONDUIT FITTING - (TYPE AX FOR MOVEMENT OF ± 2") AT BRIDGE EXPANSION JOINTS

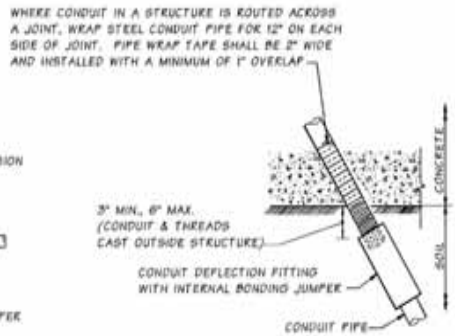

CONDUIT DEFLECTION FITTING A

CONDUIT FITTING - TYPE DX FOR DEFLECTION OF 30° AND ¾" MOVEMENT. PLACE AT CONDUIT PIPE EXIT FROM STRUCTURE

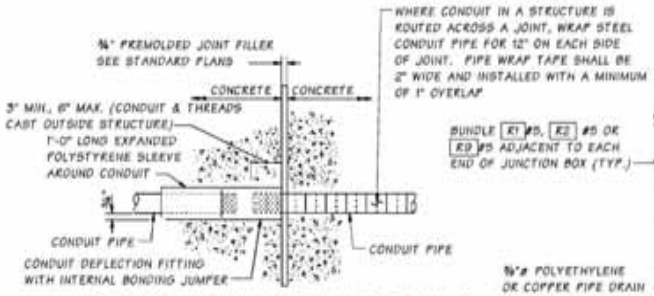

CONDUIT DEFLECTION FITTING B

CONDUIT FITTING - TYPE DX FOR DEFLECTION OF 30° AND ¾" MOVEMENT. CONDUIT PIPES PLACED THROUGH RETAINING WALL TRAFFIC BARRIER SHALL BE FITTED WITH DEFLECTION FITTINGS AT A MAXIMUM SPACING OF 120 FEET. THE DEFLECTION FITTINGS SHALL BE PLACED AT THE TRAFFIC BARRIER OPEN JOINT THAT COINCIDES WITH THE RETAINING WALL STEM EXPANSION JOINT NEAREST TO THE TRANSVERSE CONSTRUCTION JOINT IN THE WALL FOOTING.

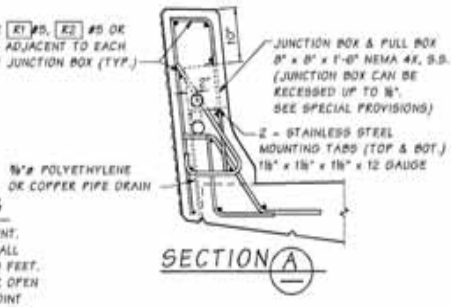

SECTION A

Bridge Design Engr.	M:\BRIDGELIB\Master8\Standards\Traffic Barriers\Shape F\SHAPE F BARRIER.SHT 3.mas								
Supervisor									
Designed By									
Checked By									
Detailed By									
Bridge Projects Engr.									
Proj.m. Plan By									
Architect/Specialist	DATE	REVISION	BY	APPD					

DESIGN NO.	STATE	FED. AID PROJ. NO.	SHEET NO.	TOTAL SHEETS
10	WASH.			
JOB NUMBER				

BRIDGE AND STRUCTURES OFFICE

Washington State Department of Transportation

STANDARD TRAFFIC BARRIERS 27

TRAFFIC BARRIER - F-SHAPE DETAIL 3 OF 3

Thu Jun 10 12:46:24 2004

Special Provisions

- Junction Boxes - Section 8-20.3(6) is supplemented with the following:
- Where conduit and junction boxes are placed in barrier, the prime Contractor shall coordinate the work of the Contractor constructing the barrier and the electrical Contractor so that each junction box placed in the barrier is placed in correct alignment with respect to the barrier, with the face of the box flush. The junction box shall be parallel to the top of the barrier within a 1-degree tolerance. If any point on the face of a junction box placed in barrier is recessed more than 1/8 inch from the surface of the barrier, the Contractor shall install a box extension per the Engineer's approval and grout around the extension or remove and replace the entire section of barrier.

Special Provisions

- Section 9-29.2 is supplemented with the following:

- **NEMA Stainless Steel Junction Boxes**
- NEMA stainless steel junction boxes and cover screws shall conform to ASTM A 304. Junction boxes installed on exterior of structures shall have an external hinge. Junction boxes shall be labeled with the appropriate designation. See Standard Plans for traffic signal system and illumination system labeling. Communication system boxes shall be labeled in the same manner, with the exception that the label shall be COMM.

- Polyethylene drain tubes for junction boxes mounted in structures shall be 3/8-inch diameter with a wall thickness of 0.062 inches and shall be rated for a 110 psi working pressure at 73° F.

- Surface mounted junction boxes and junction boxes placed in cast in place structures shall be NEMA 4X.

- Junction boxes installed in structures constructed by slip forming shall be NEMA 3X and shall be adjustable for depth, with depth adjustment bolts, which are accessible from the front face of the junction box with the lid installed.

Stainless Steel Junction box

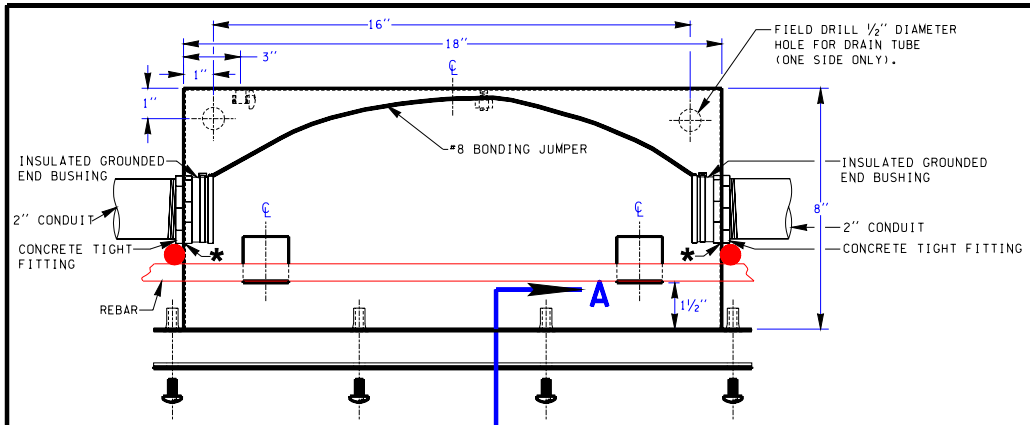

* USE THIS SAME METHOD FOR EVERY CONDUIT THAT ENTERS THE JUNCTION BOX. FIELD DRILL OR PUNCH HOLES FOR CONDUIT ENTRY WHILE MAINTAINING CONCRETE TIGHT ENTRANCE.

PLAN VIEW

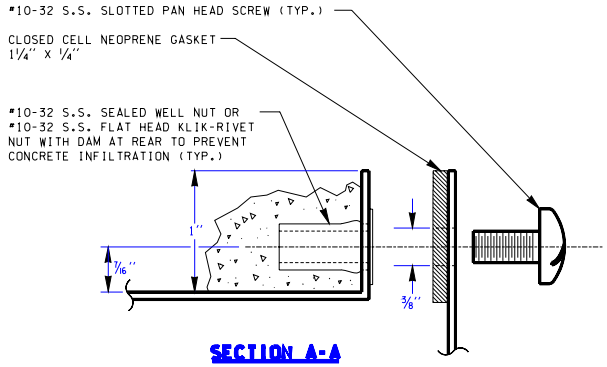

SECTION A-A

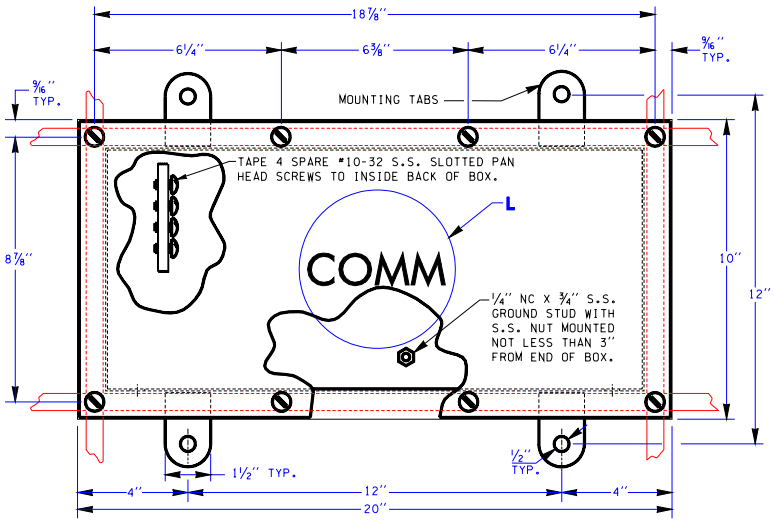

PROFILE VIEW

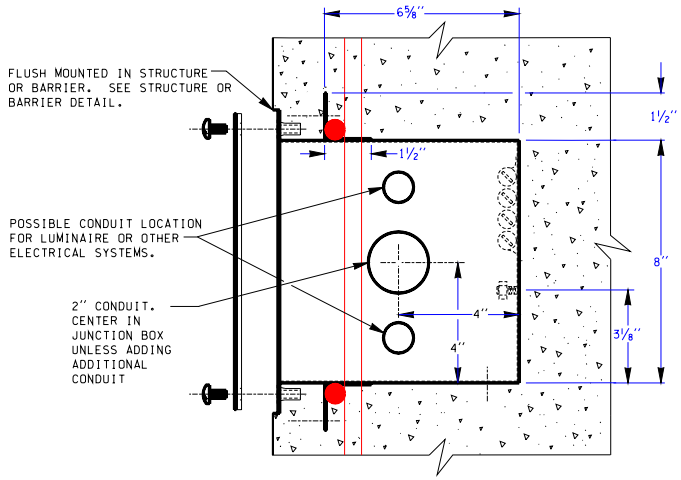

SIDE VIEW

LEGEND DETAIL

MARK L

1" NOM. ITS 1" NOM.

INTELLIGENT TRANSPORTATION SYSTEM

1" NOM. COMM 1" NOM.

COMMUNICATION SYSTEM

1" NOM. LT 1" NOM.

LIGHTING SYSTEM

1" NOM. TS 1" NOM.

TRAFFIC SIGNAL SYSTEM

FORM LETTERS WITH 1/16" S.S. WELDED OR ENGRAVED LINE THICKNESS OR STAMP

NEMA 4X FLUSH MOUNT J-BOX

TYPE 304 STAINLESS STEEL, WELDED SEAM CONSTRUCTION
#12 GA BACKBOX W / #2B FINISH
#12 GA COVER W / #4 FINISH
#12 GA MOUNTING TABS
NOT TO SCALE

GENERAL NOTE: JUNCTION BOX LABELING SHOWN FOR STRUCTURES ONLY. LABEL ALL OTHER JUNCTION BOXES PER STANDARD PLAN J-11a AND SPECIAL PROVISIONS.

	4/4/00		Dimentioning, added	TB	REGION NO. 10	STATE WASH	FED.AID PROJ.NO.
DESIGNED BY			conduit, labled views, legend ITS				
ENTERED BY J. HARVEY	1/20/00		MISPELLED SURVEILLANCE (LEGEND)				
CHECKED BY	5/28/99		TYPE 316 TO TYPE 304	JH	JOB NUMBER		
PROJ. ENGR.	1/28/99		removed bus bar	JH			
REGIONAL ADM.	6/22/98		size &location of mounting tabs	JH	CONTRACT NO.		
	DATE	DATE	REVISION	BY			

FIELD OPERATIONS SERVICE SUPPORT CENTER

30

Washington State Department of Transportation

ENGLISH

FLUSH MOUNT SS J-BOX

6.20E

SHEET OF SHEETS

30

$$USERNAME$$ $$$$$$$$DESIGNFILENAME$$$$$$ $$$$DATE$$$ PLOT1

Stainless Steel Junction box

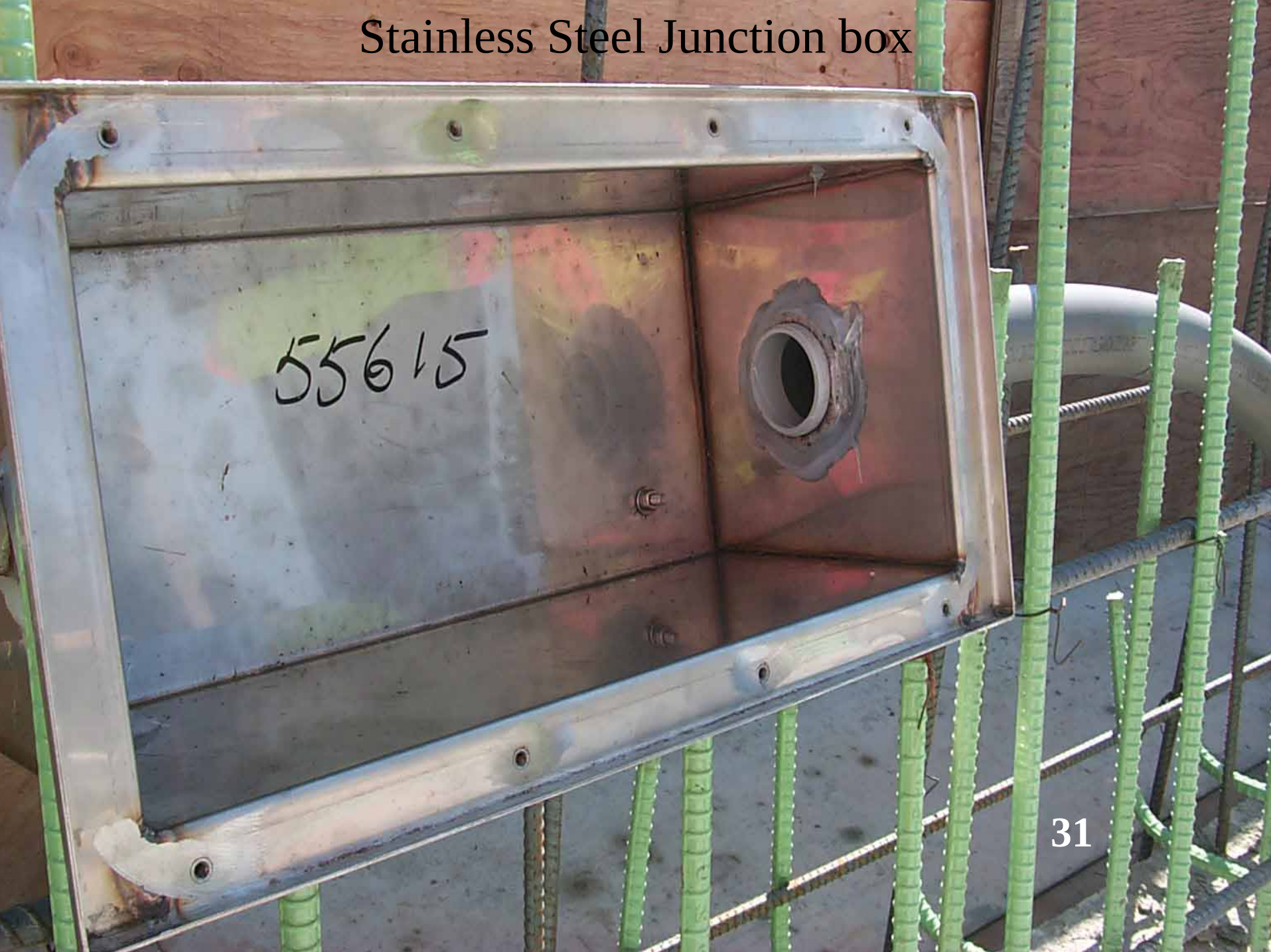

Adjustable Stainless Steel Junction box

Adjustable Stainless Steel Junction box

Conduit exiting Traffic Barrier

FOR
Washington
39173-7

CURVE DATA					
P.I. STATION	Δ	RADIUS	TANGENT	LENGTH	BK. TANGENT BRG.
[illegible]	13°04'29" RT.	1524.003	174.645	347.773	N 26°25'11" W

SEC. 10, T.27N., R.4E., W.M.
SNOHOMISH COUNTY

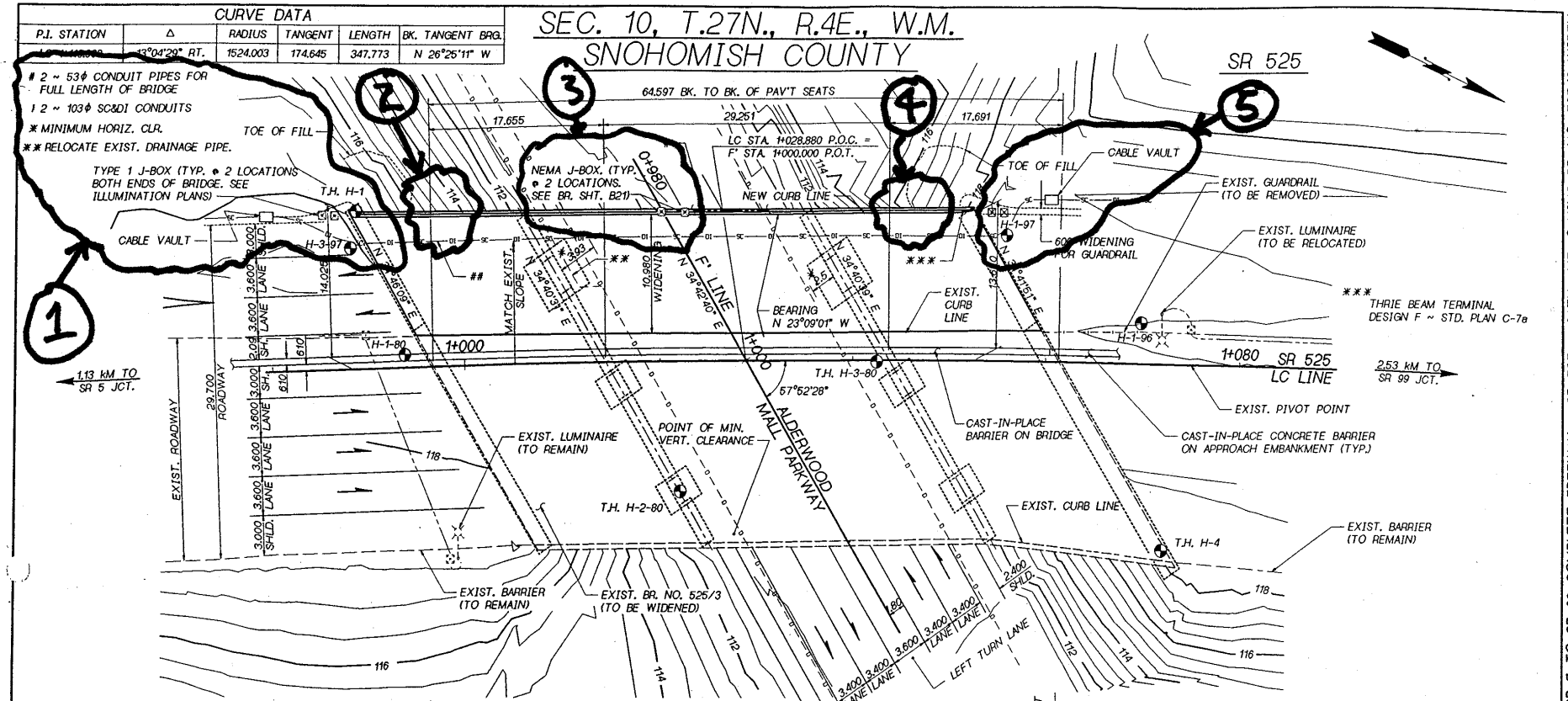

PLAN

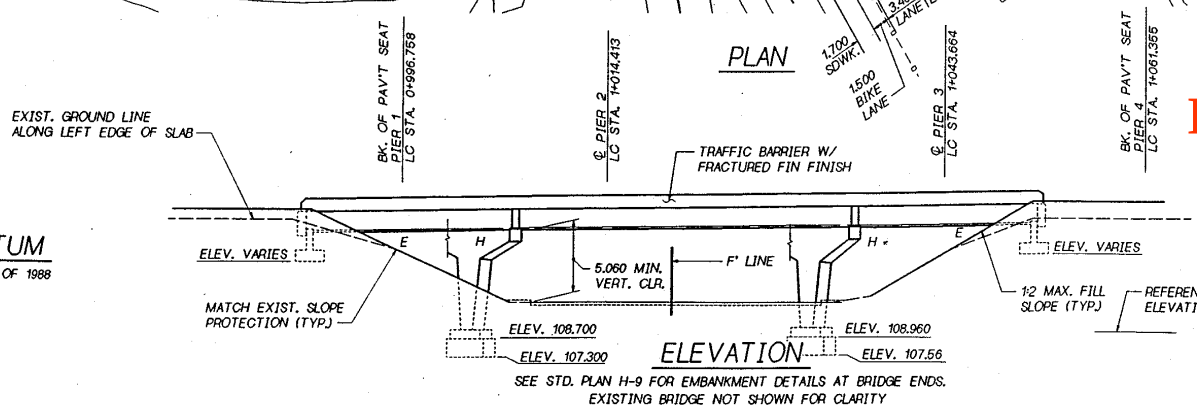

ELEVATION

SEE STD. PLAN H-9 FOR EMBANKMENT DETAILS AT BRIDGE ENDS.
EXISTING BRIDGE NOT SHOWN FOR CLARITY

Bridge Layout Sheet

DATUM
N.A.V.D. OF 1988

P.C. GIRDERS (W58MG) WIDENING
CONTINUOUS FOR LIVE LOAD
LOADING: HS-25
OR
TWO 107kN AXLES @ 1.220 CTRS.

Bridge Design Engr.	BR525_3_WIDENROOT (FGB) SR525_3_BM.FGB: 1				
Supervisor					
Designed By M. WOO 2/97					
Checked By R. D. BRAXMEYER 11/98					
Detailed By G. A. T. WALDRON 11/98					
Bridge Projects Engr.					
Prelim. Plan By H. ZHANG 11/98					
Architect/Specialist A. YOUNG 11/98	DATE	REVISION	BY	APP'D	

REGION NO. 10 | STATE WASH. | FED. AID PROJ. NO | SHEET NO. | TOTAL SHEETS | JOB NUMBER

BRIDGE AND STRUCTURES OFFICE

BRIDGE AND STRUCTURES ENGINEER

Washington State Department of Transportation

SCDIBRIDGE1

SR525 I-5 to SR99
OL-1610
37

PLAN AND ELEVATION

BRIDGE SHEET NO. B2
SHEET 345 OF 412 SHEETS

SH 626 JOB NO. 7006 SHEET 1 OF 4

C.S. 3127 ~ PROJ. NO. OL1610 ~ NORTHWEST REGION ~ SR 5 TO SR 99 COMPLETE FREEWAY ~ SR 526 ~ 28TH AVE. O-XING BR. NO. 525/3 WIDEN

ITS(SC&DI) - install conduit details

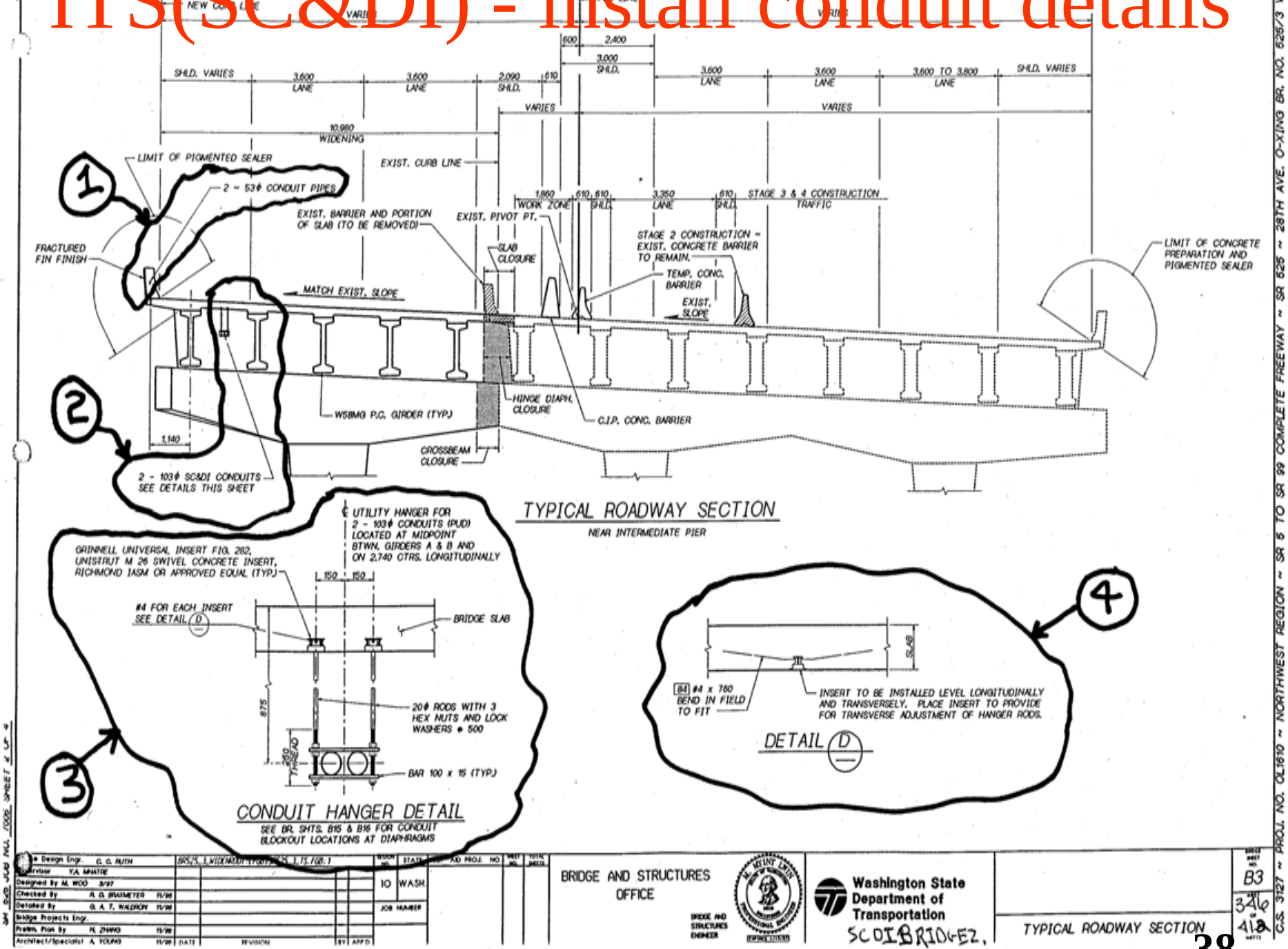

ITS(SC&DI) conduit in bridge-cont.

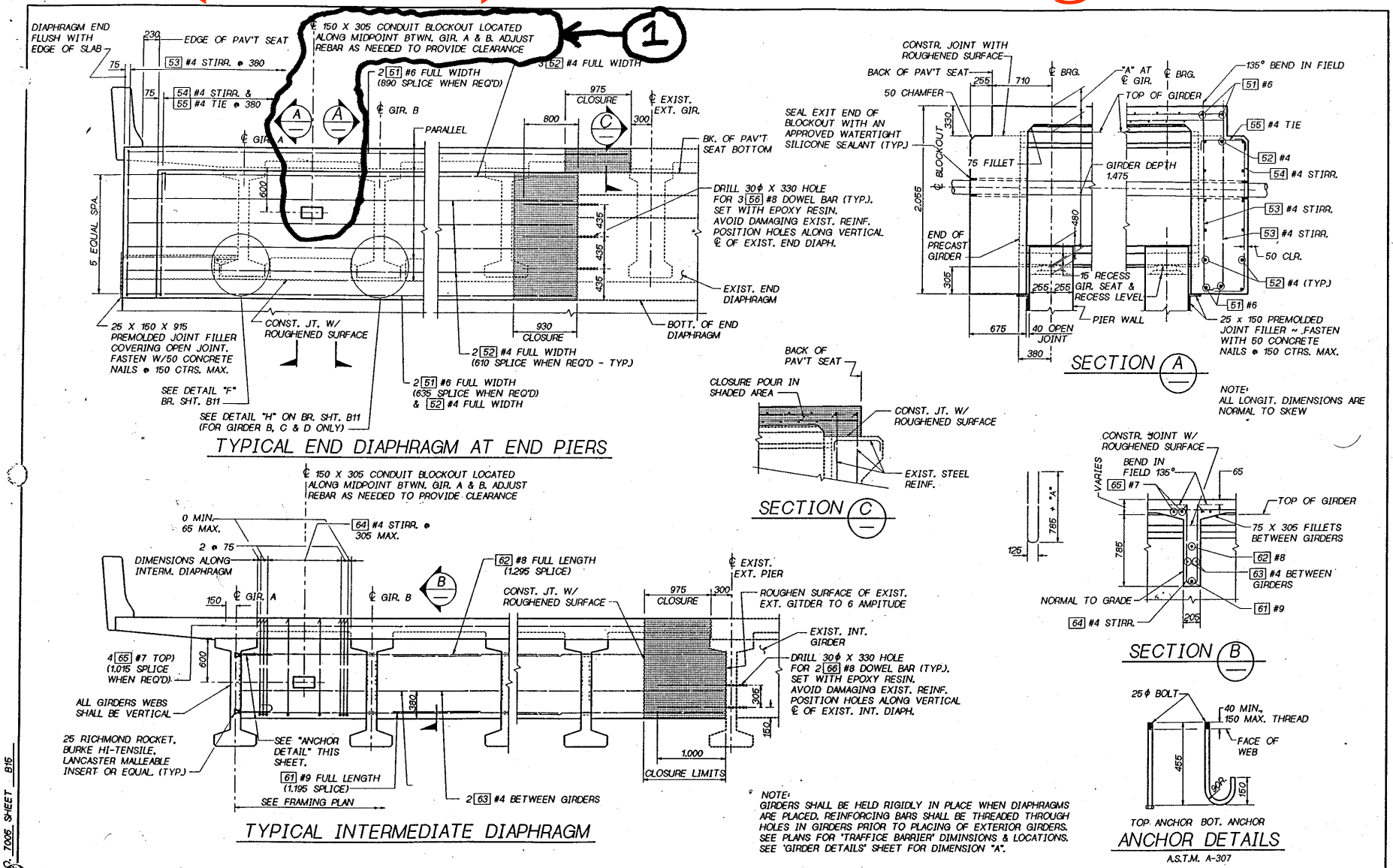

ITS(SC&DI) conduit in bridge-cont.

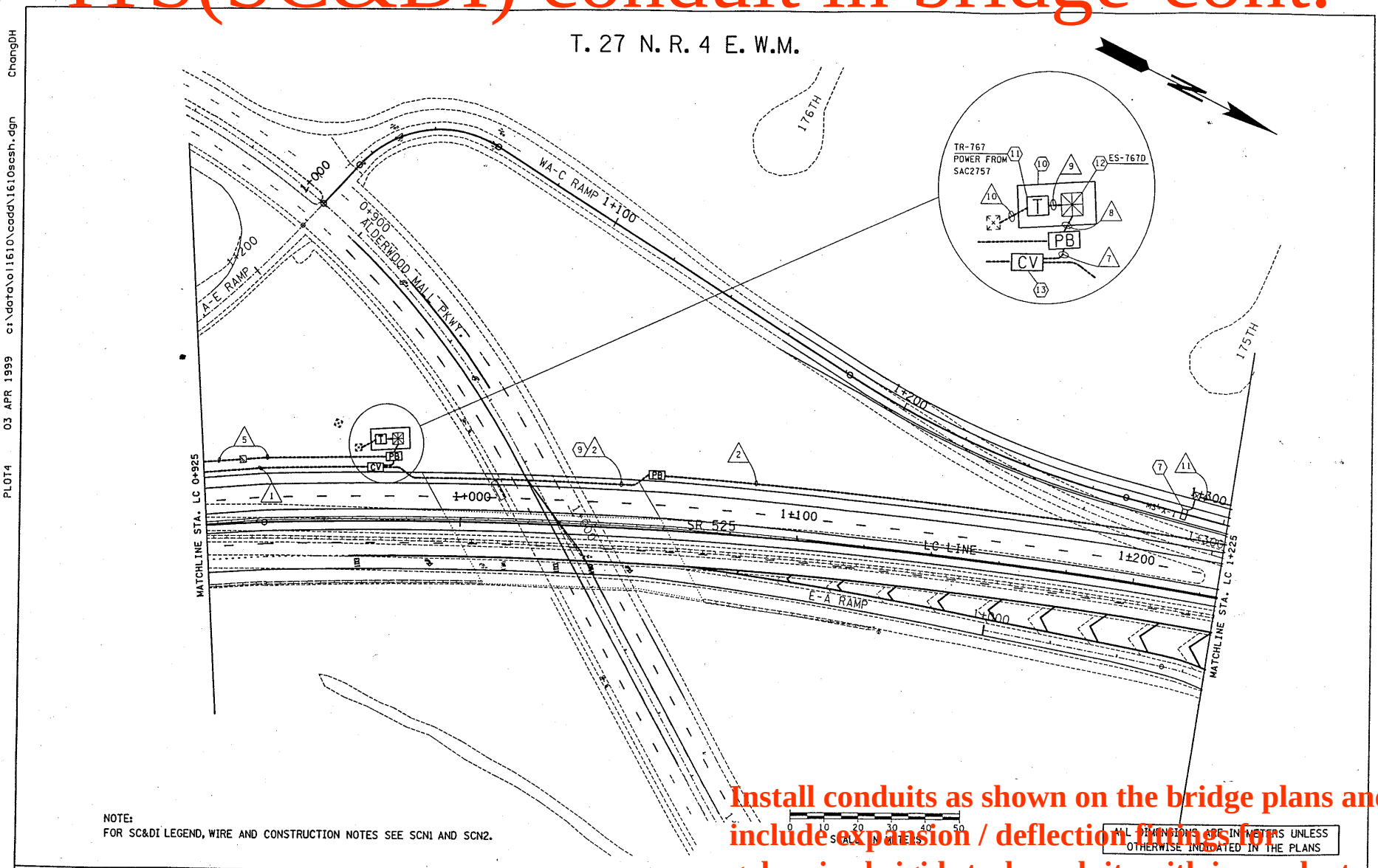

Install conduits as shown on the bridge plans and include expansion / deflection fittings for galvanized rigid steel conduits with inner ducts per conduit manufacturer.

Install luminaire/ITS base

SEC. 34, T. 28, N., R. 4E., W.M.
SNOHOMISH COUNTY

CURVE DATA					
P.I. STATION	DELTA	RADIUS	TANGENT	LENGTH	BK. TANGENT BRG.
SR526 4+471.005	36°53'41" RT.	594.000	198.143	382.497	N 24°00'39" W
E-N 3+118.230	148°51'07" RT.	35.000	125.575	90.928	N 33°10'03" E
E-N 3+298.877	156°46'17" RT.	30.000	145.964	82.085	S 02°01'10" W
E-N 3+394.455	34°02'03" RT.	521.000	159.457	309.481	N 21°12'33" W
W-S 5+073.179	111°18'49" RT.	50.000	73.179	97.139	S 48°09'04" W
W-S 5+310.362	96°42'19" RT.	47.000	52.849	79.328	S 76°11'06" E

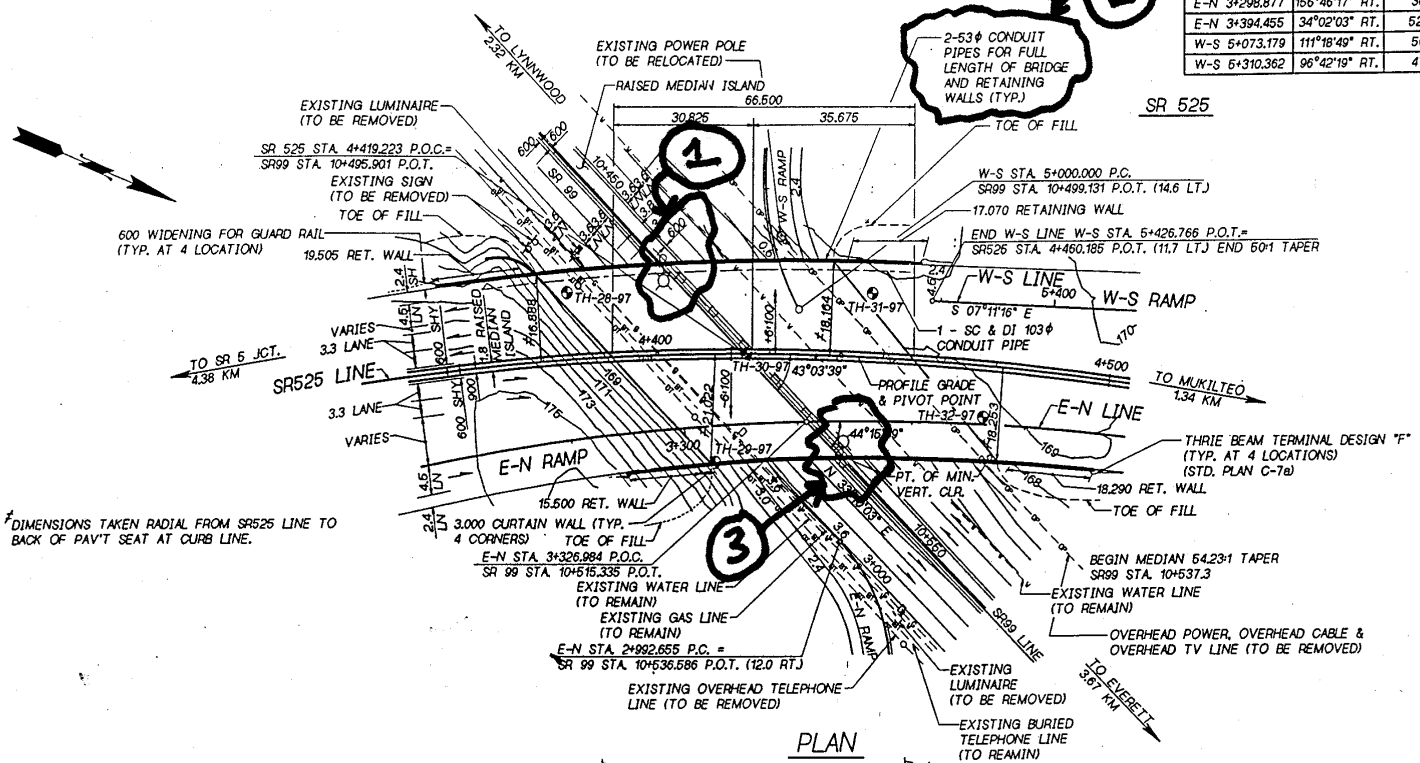

PLAN

BEARING OF PIER 1 - N 33°10'03" E
BEARING OF PIER 2 - N 33°10'03" E
BEARING OF PIER 3 - N 37°05'51" E

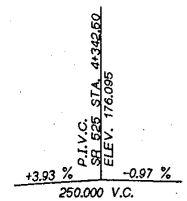

SR 525 PROFILE

LEGEND

B/15 — IDENTIFIES SECTION, VIEW OR DETAIL
TAKEN OR SHOWN ON BRIDGE SHEET 15
B/— TAKEN OR SHOWN ON THE SAME SHEET

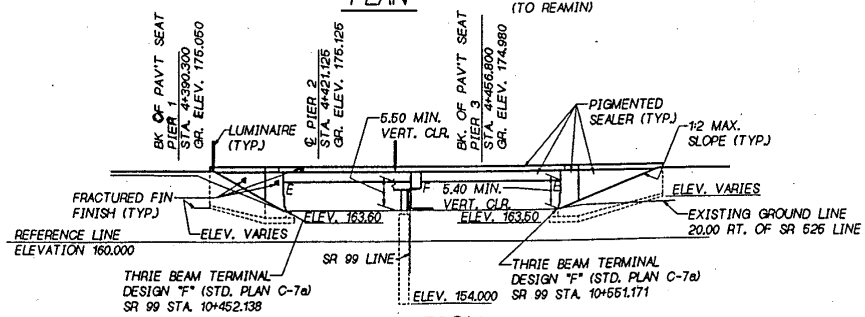

ELEVATION

GRADE ELEVATION SHOWN ARE FINISH GRADES AT TOP OF ROADWAY SLAB ON SR 525 LINE AND ARE EQUAL TO PROFILE GRADE. SEE STD. PLAN H-9 FOR EMBANKMENT DETAILS AT RETAINING WALL ENDS.

DATUM
N.A.V.D. OF 1988

P.C. GIRDERS (W74MG)
CONTINUOUS FOR L.L.
LOADING: HS-25
OR
TWO 107 KN AXLES @ 1.220 C'TRS.

Bridge Design Engr. C.G. RUTH	SR99_525ROOT:(FGB)SR99_BSD.FGB: 1	REGION NO.	STATE	FED. AID PROJ. NO.	SHEET NO. / TOTAL SHEETS
Supervisor J. A. VAN LUND		10	WASH.		
Designed By G.C./E.S.M./P.D.K. 10/97		JOB NUMBER			
Checked By N.S. BROWN 10/97					
Detailed By J. PLESHA 10/97					
Bridge Projects Engr. R.T. SHAEFER					
Prelim. Plan By H. ZHANG					

BRIDGE AND STRUCTURES OFFICE
BRIDGE AND STRUCTURES OFFICE

Washington State Department of Transportation

LUMINBASE1

LAYOUT

BRIDGE SHEET NO. 1
SHEET 465 OF 558

C.S. 3127 - PROJ. NO. OL2300 - NORTHWEST REGION - JCT. SR 99 INTERCHANGE - SR 525 - JCT. SR 99 O'XING

SR 525 JOB NO. '99 SHEET 1

Install luminaire / ITS camera pole

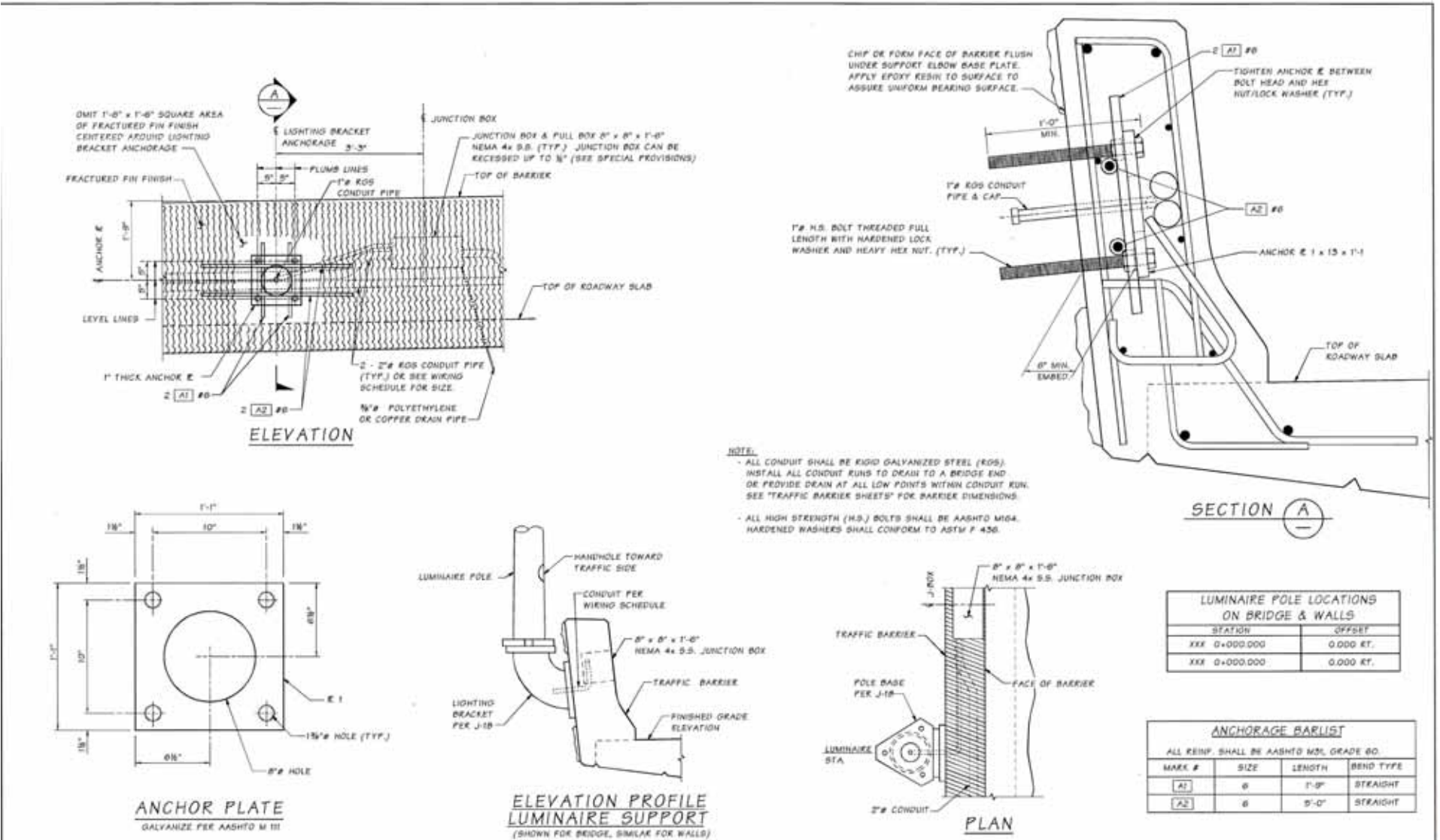

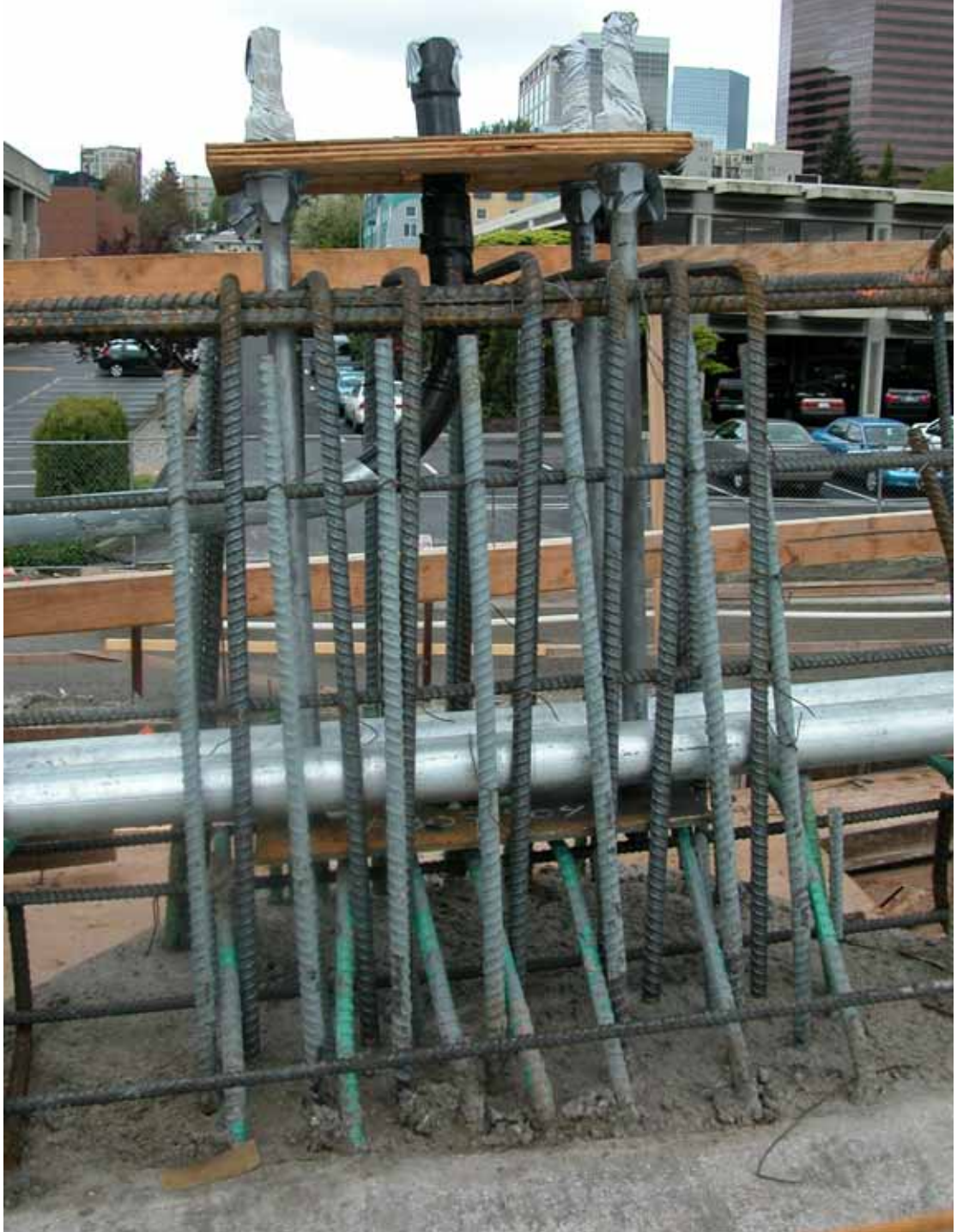

Install Traffic Loop

ADDENDUM #3

FILE: OCS/LAYO.DWG PLOT SCALE: 1=1 DATE: 09/22/95 TIME: 09:46am PATH: O:\WSDOCS\DRAWINGS

BEARING EQUATIONS

SR 161 = ROADWAY PLAN N 27°23'18" W / BRIDGE PLAN N 25°44'30" W

SR 5 = ROADWAY PLAN N22°22'42" E / BRIDGE PLAN N24°01'30" E

SEC. 28, T. 21 N., R. 4 E., W.M.

KING COUNTY

SR 161

406'-5¼" BACK TO BACK OF PAV'T. SEATS (123.885 M)

81'-5¼" (24.835 M) | 90'-6" (27.585 M) | 74'-5¼" (22.700 M) | 90'-5" (27.560 M) | 69'-6¾" (21.205 M)

6"ø BRIDGE DRAIN LOCATIONS	
LEFT STATION	RIGHT STATION
124+38	124+90
124+50	125+02
125+28	125+81
125+40	125+92
126+02	126+54
126+15	126+66
126+93	127+45
127+05	127+57

1 2 3 4 5 5A 6

TOE OF FILL

T.H. H-4

LR LINE N 24°01'30" E

LL LINE N 24°01'30" E

TO SR 99 3.8 MILES

2~ 2"ø CONDUIT IN BARRIER

SR 161 STA. 125+16.01 P.O.T. = LR LINE STA. 1848+07.70 P.O.T.

SR 161 STA. 126+78.44 P.O.T. = LL LINE STA. 1848+83.01 P.O.T.

EXIST. 6" GAS LINE W/ 24" CASING

STRUCTURAL EARTH WALL

1-4"ø GALVANISED STEEL SCBDI CONDUIT

H-3-94

THRIE BEAM TERMINAL DESIGN 'F' (TYP. AT ALL FOUR CORNERS)

6'-0" SIDEWALK & 6" CURB (TYP. AT ALL FOUR CORNERS)

23'-6" WIDEN.

PROFILE GRADE & PIVOT POINT

EXIST. BR. DRAIN TO BE PLUGGED AND FILLED (TYP. ~ 8 LOCATIONS)

EXIST. SDWK. AND METAL RAILING (TO BE REMOVED)

EXISTING BRIDGE NO. 161/102 (TO BE WIDENED)

℄ SR 161 N 25°44'30" W

EXIST. GUARDRAIL (TYP. ~ TO BE REMOVED)

TO SR 18 0.7 MILES

CATCH BASIN TYPE I (TYP. FOUR LOCATIONS)

H-2-94

11-1-94

EXIST. 9' x 7' SIGN (TO BE REMOVED)

62'-0" ROADWAY

11' LANE 11' LANE 12' TURN LANE 11' LANE 11' LANE

TO SR 514 2.2 MILES

2 TYPE I JCT BOX FOR 2 - 2"ø CONDUIT PIPE (TYP. ALL FOUR CORNERS OF BRIDGE)

EXISTING FENCE TO BE REMOVED AND RELOCATED (TYP.)

P.T. OF MIN. VERT. CLR.

2' WIDENING FOR GUARDRAIL (TYP.)

64'-0" ROADWAY

EXISTING GUARDRAIL TO BE REMOVED AND RELOCATED (TYP.)

TO SR 18 0.7 MILES

LEGEND:

IDENTIFIES SECTION, VIEW OR DETAIL

TAKEN OR SHOWN ON BRIDGE SHEET 13

DASH USED WHERE SECTION, VIEW OR DETAIL IS TAKEN AND SHOWN ON SAME SHEET

BORING LOCATION, SEE SPECIAL PROVISIONS FOR BORING LOGS

* 6"ø BRIDGE DRAIN (TYP. 16 LOCATIONS) SEE TABLE FOR LOCATIONS.

** JUNCTION BOX IN BARRIER, SEE BR. SHT. 26 FOR LOCATIONS.

*** 6"X6" PREFORMED TRAFFIC LOOP SEE SHEET TS1.

REFERENCE LINE ELEVATION 260.0

PLAN

BEARING OF ALL PIERS TO MATCH EXISTING.

P.C. GIRDERS (W42G) RIGHT SIDE WIDENING

P.C. GIRDERS (W50G) LEFT SIDE WIDENING

LOADING: HS-25 OR TWO 24K AXLES @ 4' C'TRS.

BK. OF PAV'T. SEAT PIER 1 SR 161 STA. 123+88.01

PIER 2 SR 161 STA. 124+69.49

PIER 3 SR 161 STA. 125+60.00

PIER 4 SR 161 STA. 126+34.47

PIER 5 SR 161 STA. 127+24.90

BK. OF PAV'T. SEAT PIER 6 SR 161 STA. 127+94.45

LUMINAIRE BY OTHERS

FRACTURED FIN FINISH (TYP.)

SC & DI CAMERA BY OTHERS

PIGMENTED SEALER (TYP.)

NEW 9'x7' SIGN BY OTHERS

LUMINAIRE BY OTHERS

PROTECTIVE SCREENING (TYP.)

2:1 MAX. SLOPE (TYP.)

LR LINE

LL LINE

EXISTING GROUND LINE 37' RT. OF ℄ SR 161

MATCH EXISTING SLOPE PROTECTION (TYP.)

17.3' MIN. VERT. CLR.

16.0' MIN. VERT. CLR.

EL. 255.0

EL. 249.0

EXIST. 6" GAS LINE W/ 24" CASING

EL. 249.0

ELEVATION

NOTES:

1. SEE STANDARD PLAN H-9 FOR EMBANKMENT DETAILS AT BRIDGE ENDS.
2. SEE BR. SHT. 2 FOR CONSTRUCTION OPENING DIAGRAM.

Bridge Design Engr.: M.M. LINN	4/93			
Supervisor:				
Designed By: D. HEINZ	9/95			
Checked By: R. D. BRAXMEYER	5/93			
Detailed By:				
Bridge Plan Engr.: KARL KIRKER	5/93			
Prelim. Plan By: G. E. C. MINNS	4/93	1-5-96	Adjd Junction Box & Notes	J.F. J.K.
Architect / Specialist: R. MAYS	5/93	DATE	REVISION	BY / APP'D

PROJ NO	STATE	FED. AID PROJ. NO.	SHEET NO	TOTAL SHEETS
10	WASH			

JOB NUMBER 95W045

CONTRACT NO.

APPROVED

Washington State Department of Transportation

TRAFFIC LOOPS

SR 161 JOVITA BLVD. TO SR 18 WIDEN - STAGE 1

LAYOUT

BRIDGE SHEET NO 1

SHEET 112 OF 140

HDR ENGINEERING INC.

EXPIRES 10/7/97

1731 ~ PROJ. NO. OL0743A ~ DIST. NO. 1 ~ JOVITA BLVD TO SR 18 ~ SR 161 ~ SR 5 O'XING BR. NO. 161/102 WIDEN.

SR 161 JOB NO 7002 SHEET 1

Install Traffic Loop - Continued

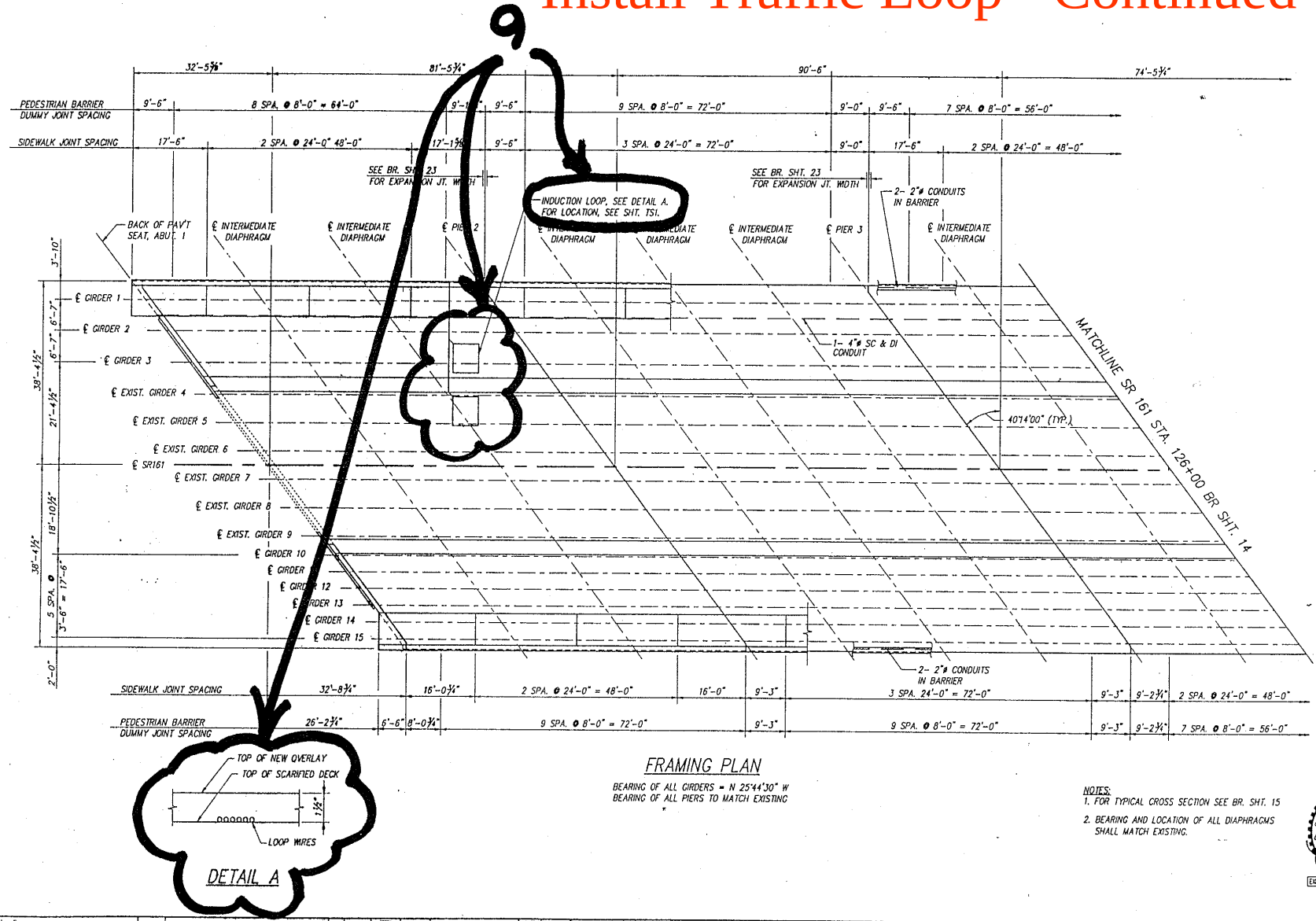

FRAMING PLAN

BEARING OF ALL GIRDERS = N 25°44'30" W
BEARING OF ALL PIERS TO MATCH EXISTING

NOTES:
1. FOR TYPICAL CROSS SECTION SEE BR. SHT. 15
2. BEARING AND LOCATION OF ALL DIAPHRAGMS SHALL MATCH EXISTING.

EXPIRES 10/7/97

HDR ENGINEERING INC.

Bridge Design Engr.:					
Supervisor:					
Designed By: D. HEINZ	9/95				
Checked By: O. PARENT	9/95				
Detailed By: R. JACKSON	9/95				
Bridge Plan Engr.:					
Prelim. Plan By:					
Architect / Specialist:		DATE	REVISION	BY	APP'D

NUCADDS, INC.

FEDERAL REGION	STATE	FED. AID PROJ. NO.	SHEET NO.	TOTAL SHEETS
10	WASH			

JOB NUMBER 95W045
CONTRACT NO.

APPROVED

Washington State Department of Transportation
TRAFFICLOOP2.

SR 161
JOVITA BLVD. TO SR 18
WIDEN - STAGE 1

3

FRAMING PLAN I

BRIDGE SHEET NO. 13
SHEET 124 OF 140

SR 161 JOB NO. 7002 SHEET 13

Preformed traffic loop

Install Traffic Loop – Cont.

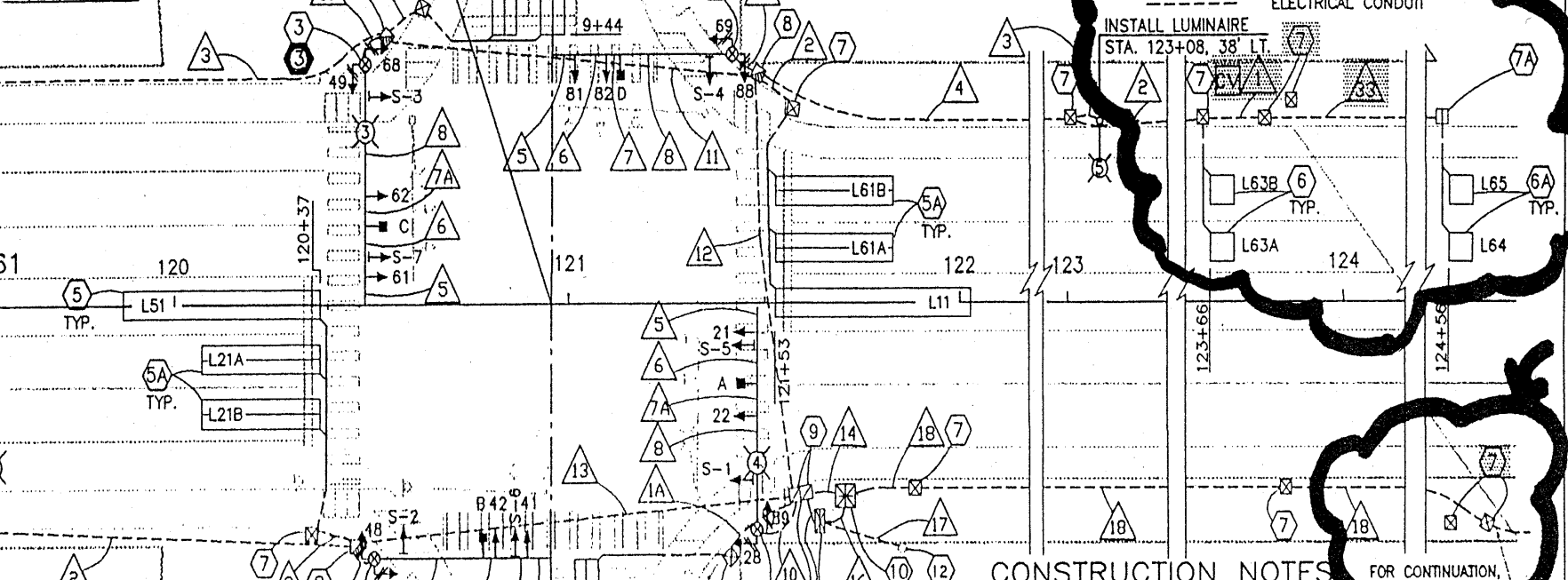

CONSTRUCTION NOTES

FOR CONTINUATION, SEE SHT., IP1.

1. INSTALL TYPE III (1) WITH SIGNAL DISPLAYS, PRE-EMPT DETECTOR, STREET NAME SIGN, 2 PPB-M AND TERMINAL CABINET.
2. INSTALL TYPE II (2) WITH SIGNAL DISPLAYS, PRE-EMPT DETECTOR, STREET NAME SIGN, 2 PPB-M AND TERMINAL CABINET.
3. INSTALL TYPE III (3) WITH SIGNAL DISPLAYS, PRE-EMPT DETECTOR, STREET NAME SIGN, 2 PPB-M AND TERMINAL CABINET.
4. INSTALL TYPE II (4) WITH SIGNAL DISPLAYS, PRE-EMPT DETECTOR, STREET NAME SIGN, 2 PPB-M AND TERMINAL CABINET.
5A. INSTALL 6'X 30' TYPE I INDUCTION LOOP. SEE J-8a
5. INSTALL 6'X 50' TYPE I INDUCTION LOOP. SEE J-8a
6A. INSTALL 6'X 6' PREFORMED DETECTOR LOOP, 1700 SERIES OR EQ.
6. INSTALL 6'X 6' TYPE 2 INDUCTION LOOP. SEE J-8a
7A. INSTALL 8"x8"x24" STAINLESS STEEL NEMA 4X JUNCTION BOX IN BRIDGE RAILING.
7. INSTALL TYPE I JUNCTION BOX.
8. INSTALL TYPE 2 JUNCTION BOX.
9. INSTALL TYPE 3 JUNCTION BOX.
10. INSTALL CONTROLLER CABINET ON PAD FOUNDATION. SEE J-3b. THE CABINET SHALL BE ORIENTED SO THAT THE DOOR IS ON THE EAST SIDE OF THE CABINET.
11. INSTALL MODIFIED TYPE B SERVICE, STRUT MOUNT SERVICE. SEE J-3b.
12. EXISTING POWER POLE WITH POWER SUPPLY. INSTALL CONDUIT AND CONDUCTOR PER UTILITY COMPANY REQUIREMENTS. COORDINATE WITH UTILITY COMPANY TO MAKE NECESSARY CONNECTIONS.

BREAKER SCHEDULE	
(SEE SPECIAL PROVISIONS)	
(2) MAIN BREAKER	100 AMP
(6) BRANCH BREAKER	15 AMP
(7) SIGNAL BREAKER	50 AMP
(8) CONTACTOR	30 AMP

0 20 40
SCALE IN FEET

THEODORE I. BELL — STATE OF WASHINGTON — 10318 REGISTERED PROFESSIONAL ENGINEER
10-16-95
EXPIRES 6-22-97

BELL·WALKER ENGINEERS Inc.
Bellevue, Washington • Boise, Idaho

TRAFFIC LOOPS

Externally Mounted Conduit

T.27N. R.3E. W.M.

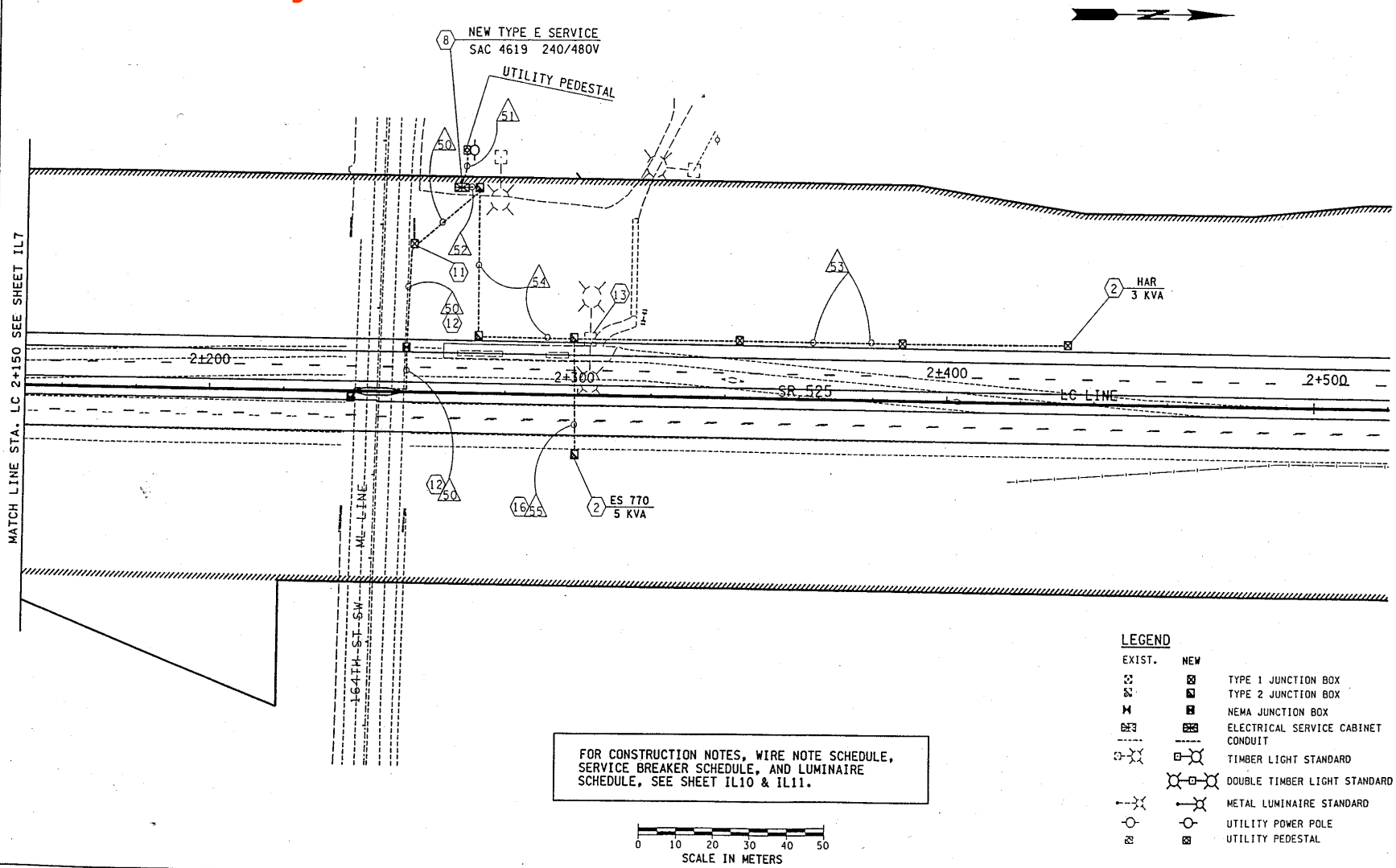

DESIGNED BY	J. PRZYCHODZEN			REGION NO. 10	STATE WASH
ENTERED BY	T. VANASSCHE			JOB NUMBER L1610	FED.AID PROJ.NO.
CHECKED BY	D. DO			CONTRACT NO.	
PROJ. ENGR.	M. COTTEN				
REGIONAL ADM.	J. OKAMOTO				
	DATE	DATE	REVISION	BY	

ENVIRONMENTAL AND ENGINEERING SERVICE CENTER

Washington State Department of Transportation

EXTCONDL.

SR 525
I-5 TO SR 99

ILLUMINATION PLAN

SHEET 50 of 58

SHEET 272 of 412

PLOT9 09 MAR 1999 c:\sothi\joe\sr525\sr525ele.dgn KovS

PLOT14 09 MAR 1999 c:\soth\joe\sr525\sr525ele.dgn KovS

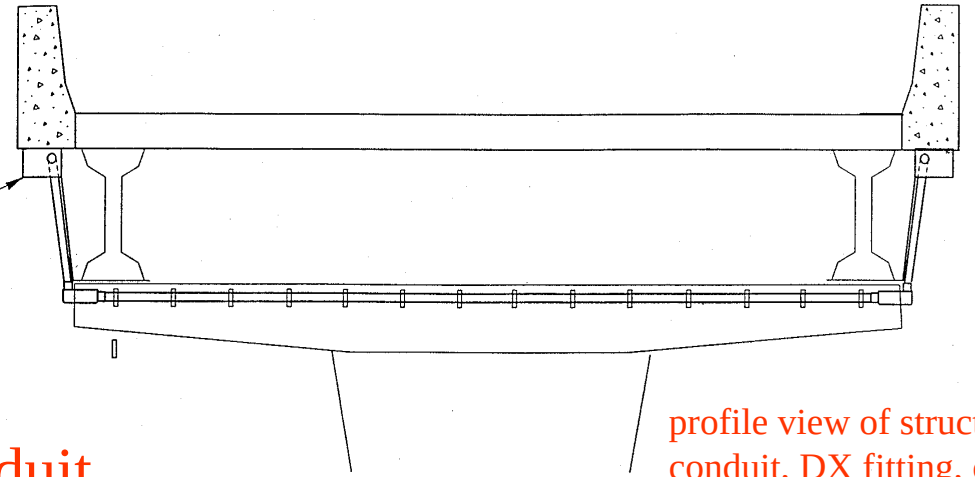

Externally Mounted Conduit

VIEW A - A

profile view of structure with conduit, DX fitting, condulets, isolation switch enclosure, surface mounted junction box, etc.

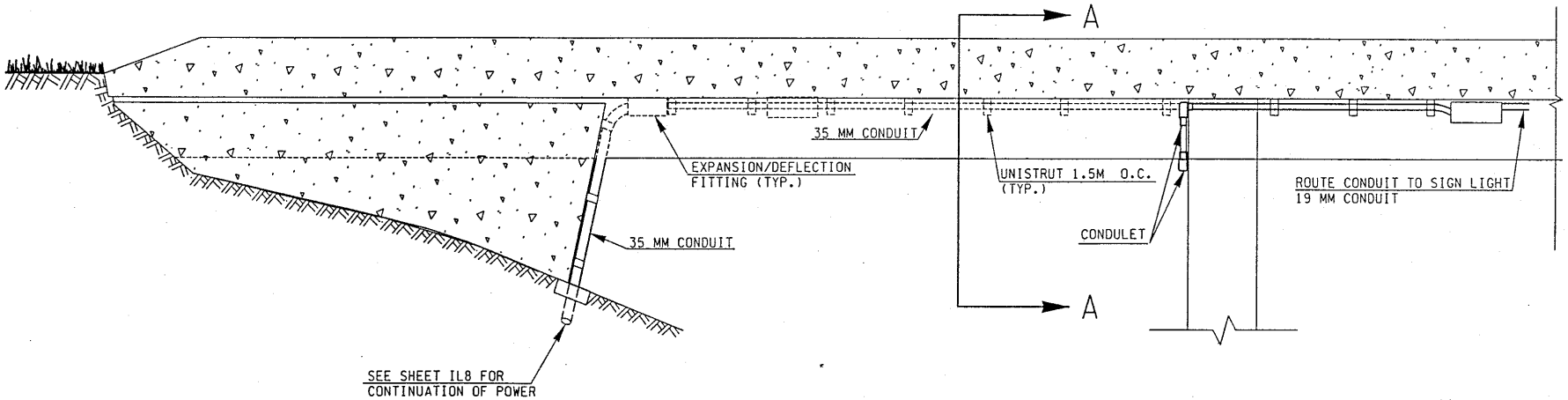

CONDUIT ROUTING DETAIL

DESIGNED BY J. PRZYCHODZEN				REGION NO. 10	STATE WASH	FED.AID PROJ.NO.	ENVIRONMENTAL AND ENGINEERING SERVICE CENTER
ENTERED BY T. VANASSCHE				JOB NUMBER L1610			
CHECKED BY D. DO				CONTRACT NO.			
PROJ. ENGR. M. COTTEN							
REGIONAL ADM. J. OKAMOTO							
	DATE	DATE	REVISION	BY			

Washington State Department of Transportation

EXTCOND2.

SR 525
I-5 TO SR 99

51

ELECTRICAL DETAILS

ED1

SHEET 276 OF 413 SHEETS

Externally Mounted Conduit – attachment detail

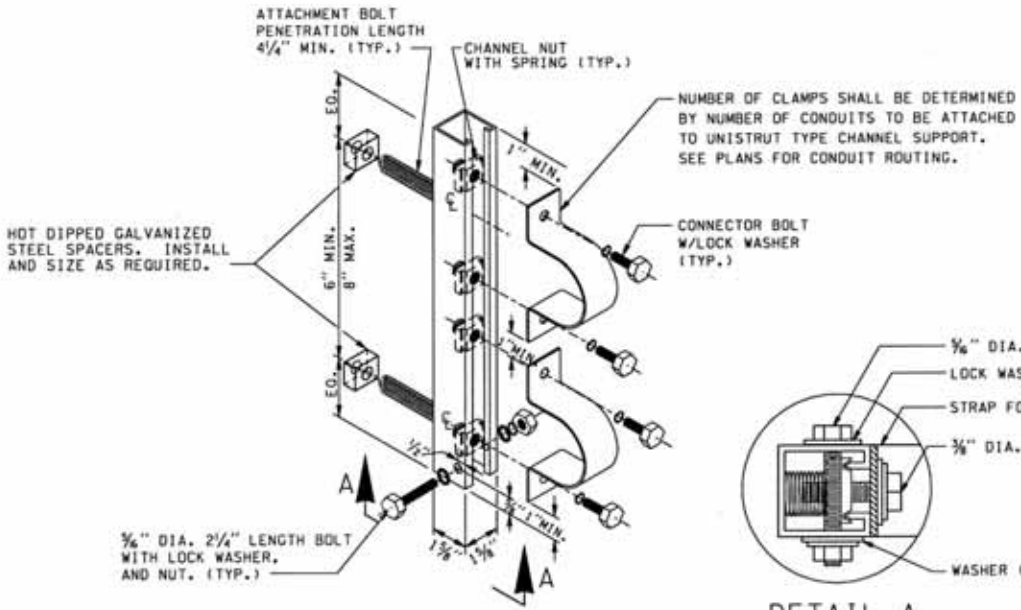

UNISTRUT TYPE CHANNEL SUPPORT DETAIL

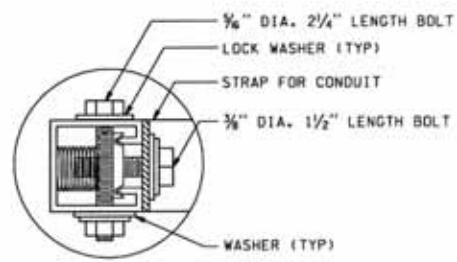

DETAIL A

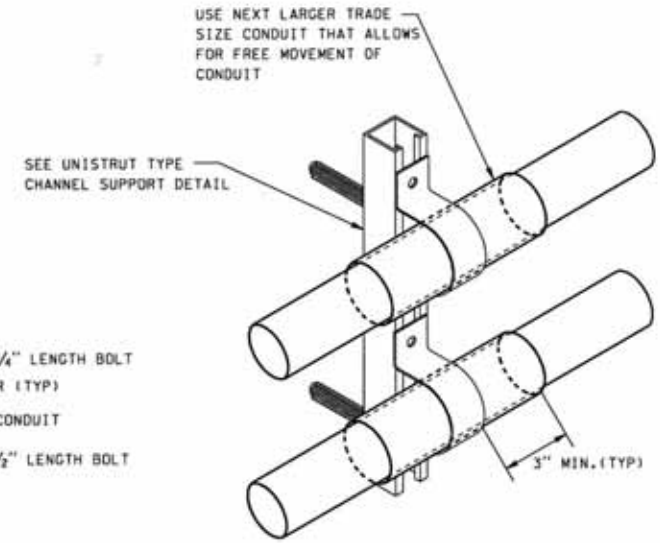

PVC CONDUIT SUPPORT DETAIL

(FOR UTILITY COMPANY USE - ONLY ALLOWED IN RARE INSTANCES)

NOTES

MOUNTING HARDWARE DETAILS ARE PROVIDED FOR ILLUSTRATIVE PURPOSES ONLY. THE CONTRACTOR MAY PROPOSE GEOMETRIC ATTACHMENT MODIFICATIONS. SUBJECT TO APPROVAL BY THE ENGINEER.

DRILLING THROUGH REINFORCING STEEL IS NOT ALLOWED. IF STEEL IS HIT WHILE DRILLING, THE LOCATION SHALL BE MOVED AND THE ABANDONED HOLE FILLED WITH GROUT CONFORMING TO SECTION 6-02.3(20). THERE SHALL BE A MINIMUM 3" EDGE DISTANCE TO THE CENTERLINE OF ANCHOR HOLES IN CONCRETE. MOUNT THE UNISTRUT TYPE SUPPORT USING AN APPROVED RESIN BONDED ANCHOR SYSTEM, INSTALLED PER MANUFACTURERS RECOMMENDATION IN DRY CONDITIONS. RESIN BONDED ANCHORS SHALL BE STAINLESS STEEL AND SHALL BE A MINIMUM OF ⅜" DIA. UNLESS THE PLANS REQUIRE LARGER ANCHORS. (EXPANSION ANCHORS ARE NOT ALLOWED.)

RIGID GALVANIZED STEEL CONDUIT		
NOMINAL TRADE SIZE IN.	CONDUIT STRAP DIAMETER OUTSIDE	CONDUIT STRAP DIAMETER INSIDE
½	0.840	0.632
¾	1.050	0.836
1	1.315	1.063
1¼	1.660	1.394
1½	1.900	1.624
2	2.375	2.083
2½	2.875	2.489
3	3.500	3.090
3½	4.000	3.570
4	4.500	4.050
5	5.563	5.073
6	6.625	6.093

SCHEDULE 40 PVC		
NOMINAL TRADE SIZE IN.	CONDUIT STRAP DIAMETER OUTSIDE	CONDUIT STRAP DIAMETER INSIDE
½	0.840	0.622
¾	1.050	0.824
1	1.315	1.049
1¼	1.660	1.380
1½	1.900	1.610
2	2.375	2.067
2½	2.875	2.469
3	3.500	3.068
3½	4.000	3.548
4	4.500	4.026
5	5.563	5.047
6	6.625	6.065

SCHEDULE 80 PVC		
NOMINAL TRADE SIZE IN.	CONDUIT STRAP DIAMETER OUTSIDE	CONDUIT STRAP DIAMETER INSIDE
½	0.840	0.546
¾	1.050	0.742
1	1.315	0.957
1¼	1.660	1.278
1½	1.900	1.500
2	2.375	1.939
2½	2.875	2.323
3	3.500	2.900
4	4.500	3.826
5	5.563	4.813

How not to install conduits & junction boxes

How not to install an expansion fitting

Summary

- Discussed installation of conduit, junction boxes, standard bases, loops & stub outs.
- With this class & the handouts we can install conduit, junction boxes, ITS(SC&DI) camera pole or luminaire bases, traffic loops or other electrical system components into a bridge or structure.
- We can make comments on designs by others.

Where to get more information

- Contact Mike Bauer- Special Provisions & Cost Estimating Engineer @ 360-705-7190
- Contact Tony Messmer- Bridge Designer (Bridge Rail Specialist) @ 360-705-7216
- Contact Terry Thayer - HQ Traffic Office @ 360-705-7290

Are there any questions?