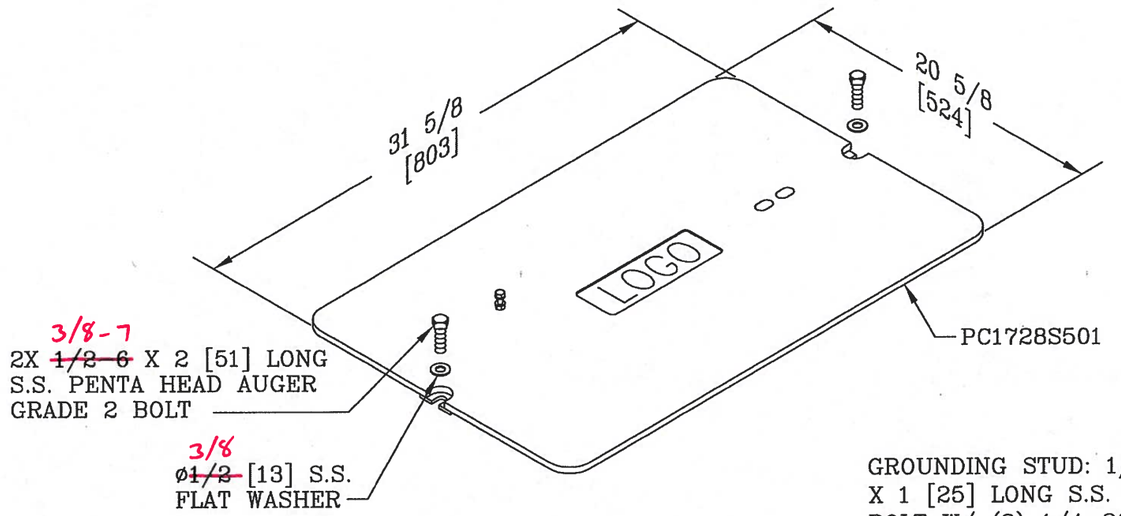

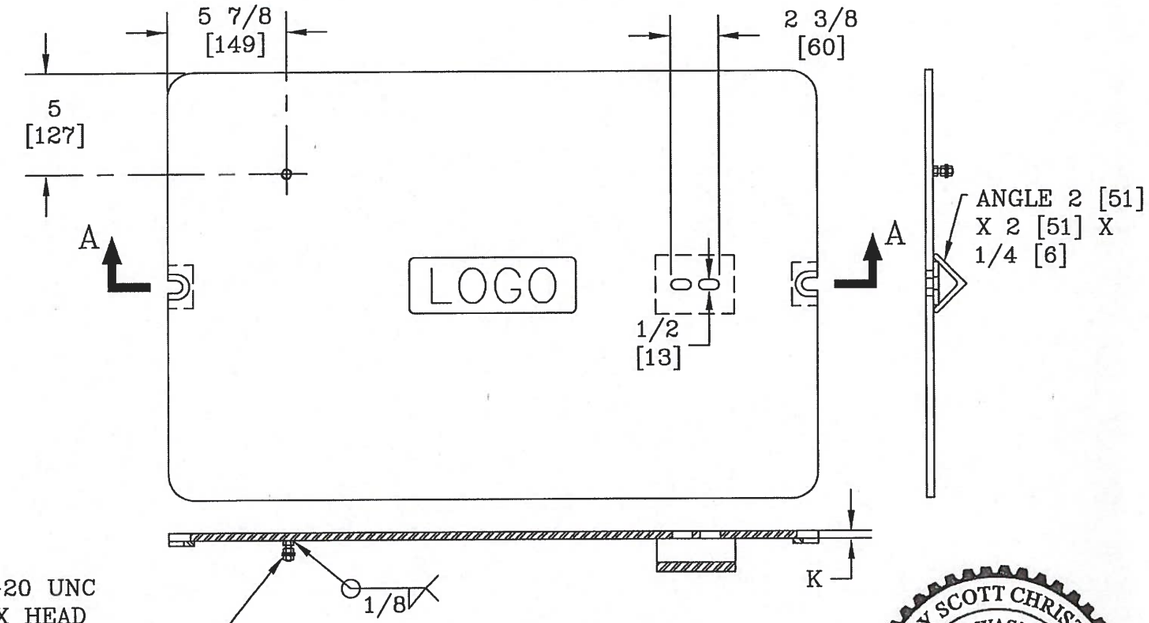

SECTION A–A

APPROVED AS NOTED
Washington State Department of Transportation
HQ Traffic Operations Office
BY: _____ DATE: 9/26/2016

GREGORY SCOTT CHRISTENSEN
STATE OF WASHINGTON
51987
REGISTERED PROFESSIONAL ENGINEER

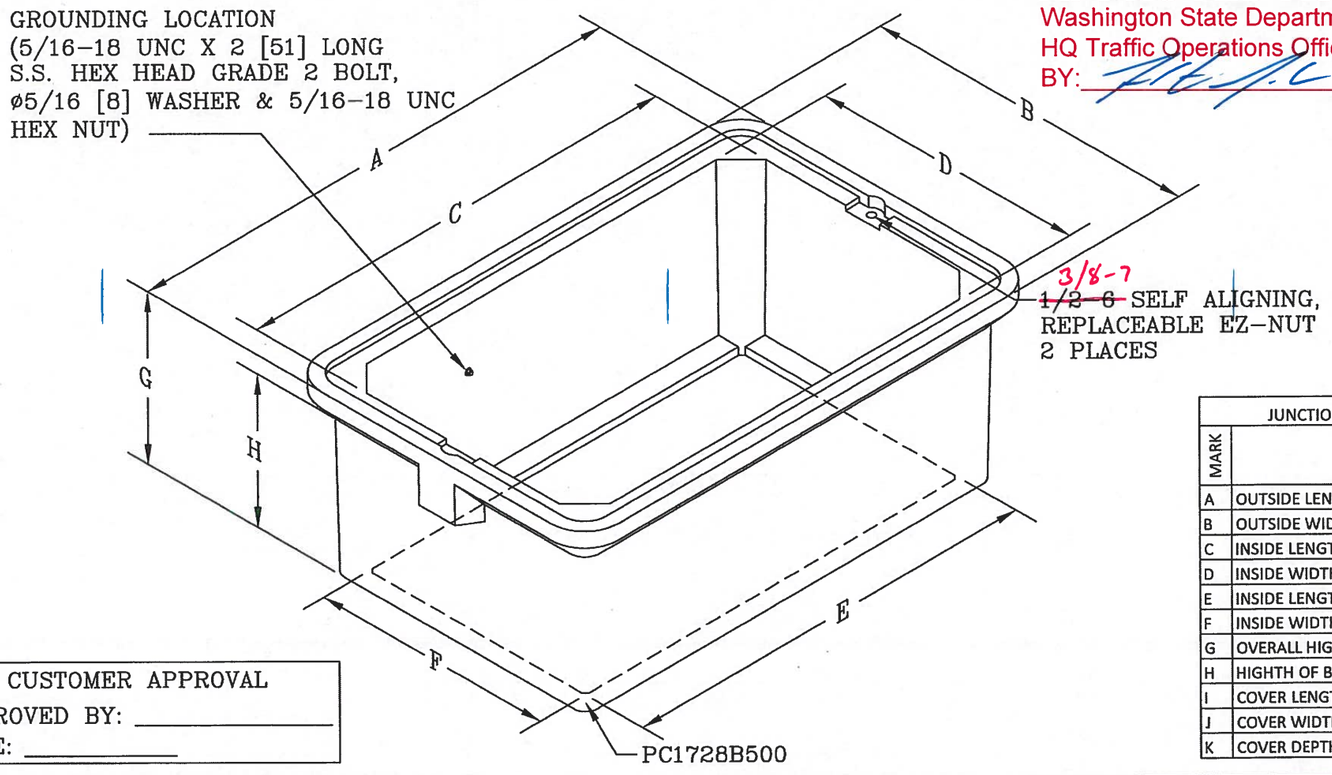

*LOGO CHART	
LOGO CODE	TEXT
U13	COMM
U23	ITS
U33	LT
U43	TS
U53	TEL

JUNCTION BOX DIMENSION TABLE		
MARK	ITEM	BOX TYPE 2
A	OUTSIDE LENGTH OF JUNCTION BOX	34
B	OUTSIDE WIDTH OF JUNCTION BOX	23
C	INSIDE LENGTH AT TOP OF BOX	30 7/16
D	INSIDE WIDTH AT TOP OF BOX	19 7/16
E	INSIDE LENGTH AT FOOT	28
F	INSIDE WIDTH AT FOOT	17
G	OVERALL HIGHTH OF BOX	12
H	HIGHTH OF BOX TO COVER LEDGE	11 5/8
I	COVER LENGTH	32
J	COVER WIDTH	21
K	COVER DEPTH	3/8

NOTES:

1. CUSTOMER IS WSDOT.
2. BOX AND COVER WILL MEET ALL TEST PROVISIONS OF THE ANSI/SCTE 77 TIER 15 LOADING REQUIREMENT.
3. THE COVER MATERIAL WILL MEET ASTM A36 & ASTM A786 REQUIREMENTS. DIAMOND PLATE COVER WILL BE PAINTED BLACK.
4. INTERIOR BOX VOLUME IS 6,591 in^3.
5. 3/8-7 ~~1/2-6~~ AUGER BOLTS MEET THE REQUIRMENT FOR ASTM F 593.
6. ALL HARDWARE IS 18-8 STAINLESS STEEL.

CUSTOMER APPROVAL
APPROVED BY: _____
DATE: _____

DIMENSIONS ARE IN INCHES OR MILLIMETERS IN BRACKETS UNLESS OTHERWISE NOTED.

	BY	DATE	WEIGHT 151# 68kg	HUBBELL® 3621 INDUSTRIAL PARK DR LENOIR CITY, TN 37771 800-346-3062 www.quazite.com	LOC LC S
DRN	BJV	9/24/12	SCALE N.T.S.	DRAWING DESCRIPTION QUAZITE® 17 X 28 X 12 BOX & COVER ASSEMBLY	REV K
CHK	MEF	9/25/12			
ENG			SIZE B		
APR					8/16
APR					
PROJECT NUMBER 106956				SHEET 1 OF 2	DRAWING NUMBER PC1728Z501-1

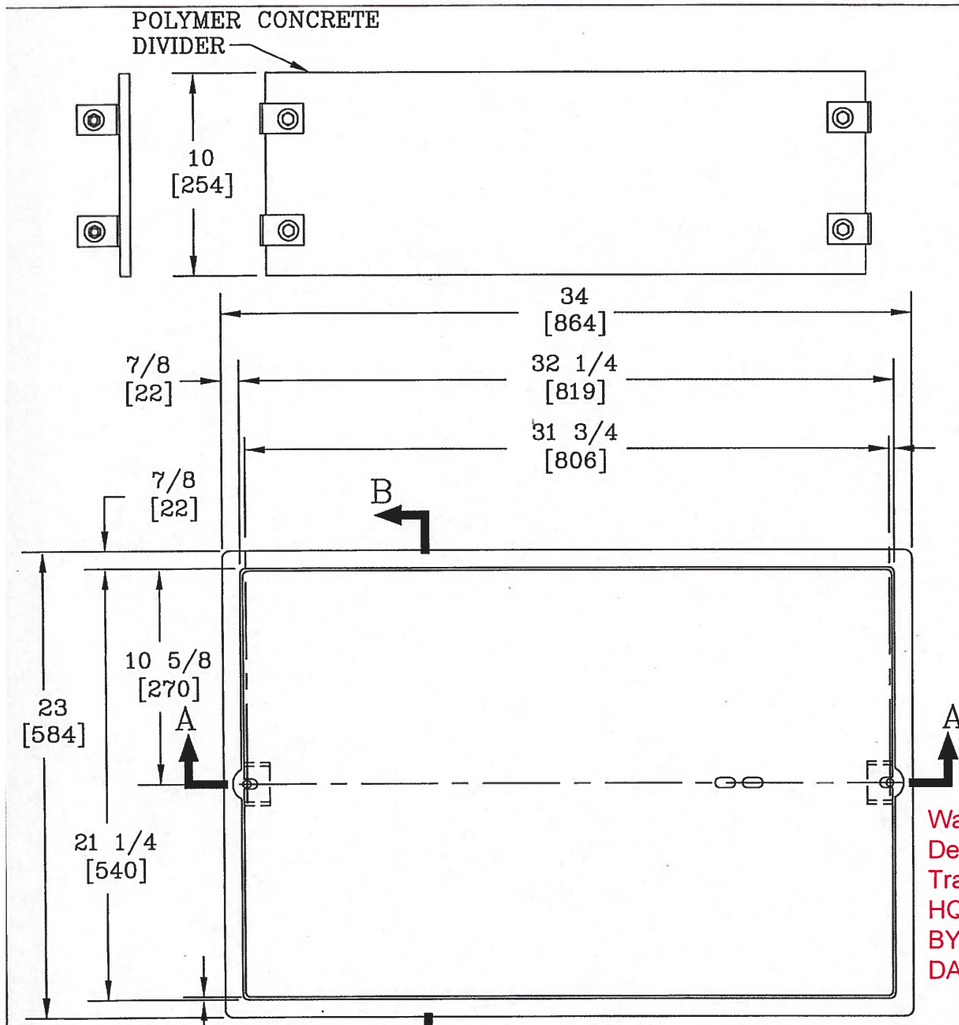

APPROVED AS NOTED
Washington State Department of Transportation
HQ Traffic Operations Office
BY:
DATE: 9/26/2016

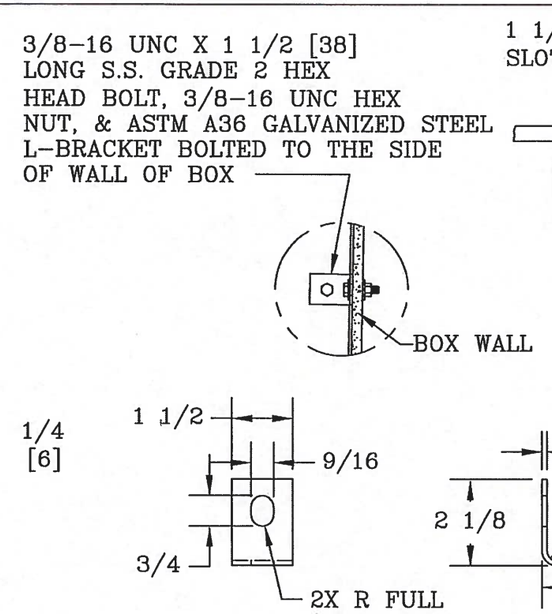

L-BRACKET DETAIL
SCALE: HALF

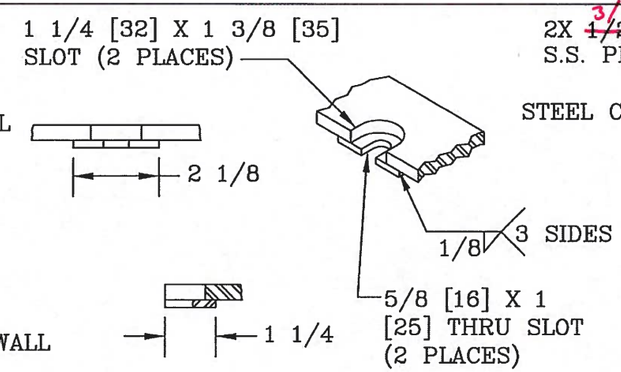

SLOT DETAIL
NTS

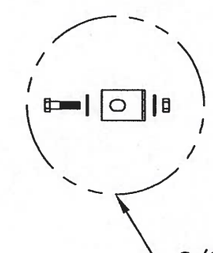

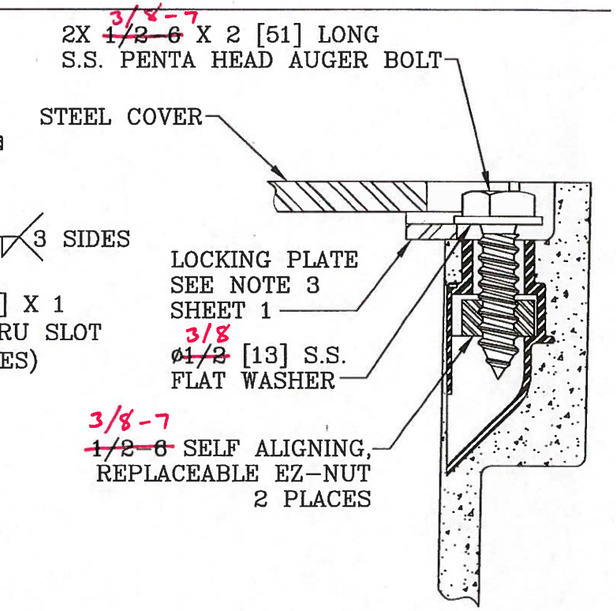

BOLT DOWN DETAIL
NTS

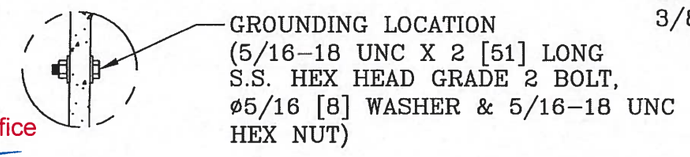

GROUNDING BOLT DETAIL
NTS

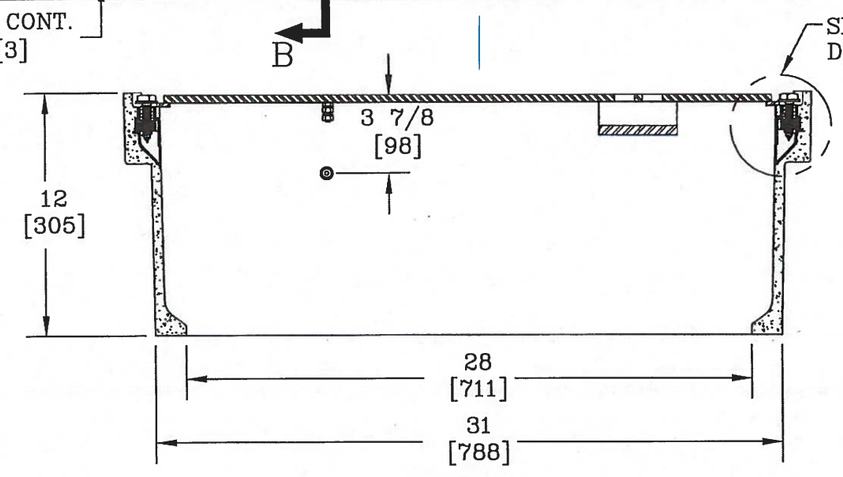

SECTION A-A

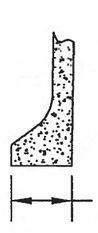

FOOT DETAIL
SCALE: HALF

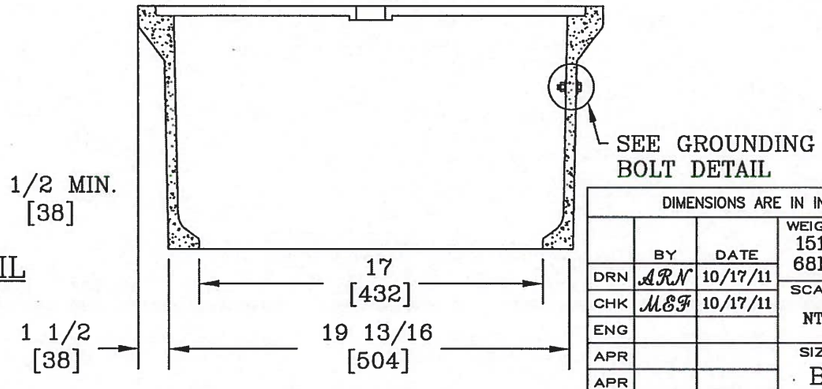

SECTION B-B

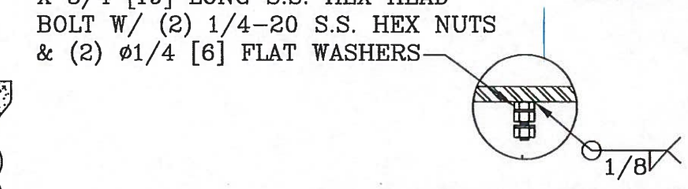

GROUNDING STUD DETAIL
NTS

DIMENSIONS ARE IN INCHES OR MILLIMETERS IN BRACKETS UNLESS OTHERWISE NOTED.

	BY	DATE	WEIGHT 151# 68kg	HUBBELL® 3621 INDUSTRIAL PARK DR LENOIR CITY, TN 37771 800-346-3062 www.quazite.com	LOC LC S
DRN	ARN	10/17/11	SCALE NTS	DRAWING DESCRIPTION QUAZITE® 17 X 28 X 12 BOX & COVER ASSEMBLY	REV K
CHK	MEF	10/17/11			
ENG					
APR			SIZE B		8/16
APR					
PROJECT NUMBER 104334				SHEET 2 OF 2	DRAWING NUMBER PC1728Z501-2

ITEM NO.	CAT.	PART NUMBER	DESCRIPTION 3/8-7	QUANTITY	UOM
1	L	C080422	INSERT EZ-NUT ~~1/2-6~~ COIL ASSY (FULL)	2.00	EA
2	L	C092069	FG 10 BA 110.00 X 12.00	1.00	EA
3	L	C092072	FG 10 BA 100.00 X 12.00	1.00	EA
4	L	C099200	MIX-UT BOX 15.5 PCT RESIN	77.00	LB
E 5	L	C082246	BOLT SS 5/16-18 X 2 HEX	1.00	EA
E 6	L	C082341	NUT SS 5/16-18 UNC HEX	1.00	EA
E 7	L	C080270	WASHER SS 5/16ID X 3/4OD FLAT	1.00	EA

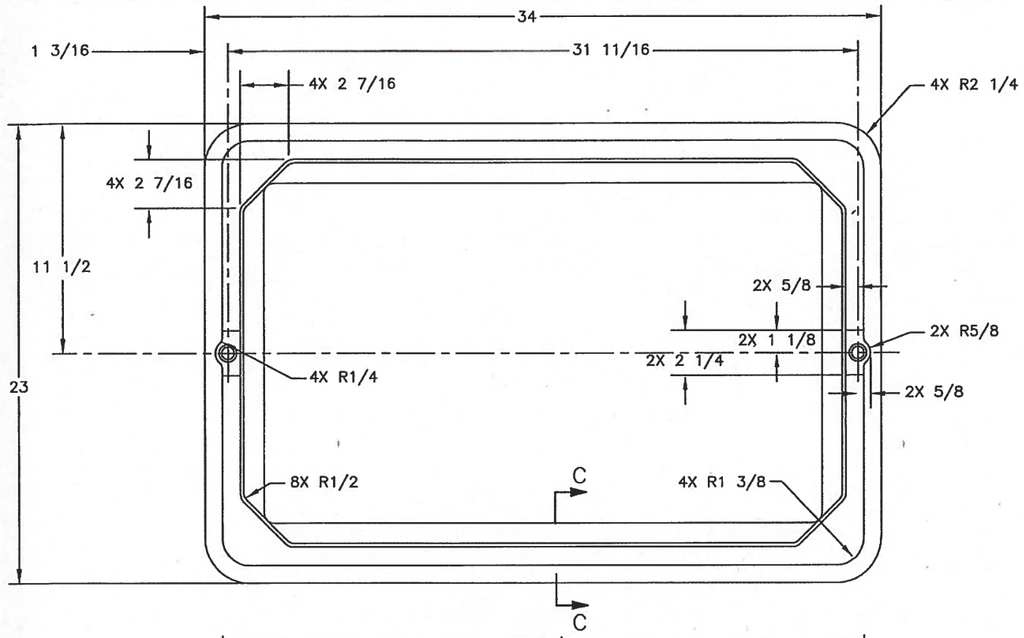

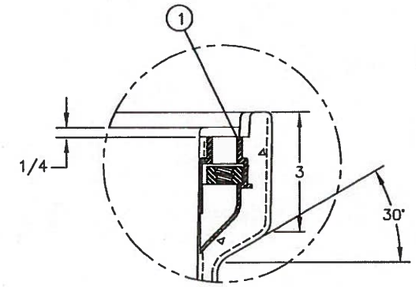

DETAIL A
SCALE: HALF
2 PLACES

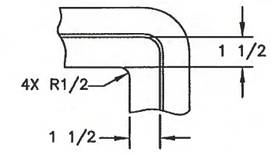

VIEW B-B
SCALE: FULL
4 PLACES

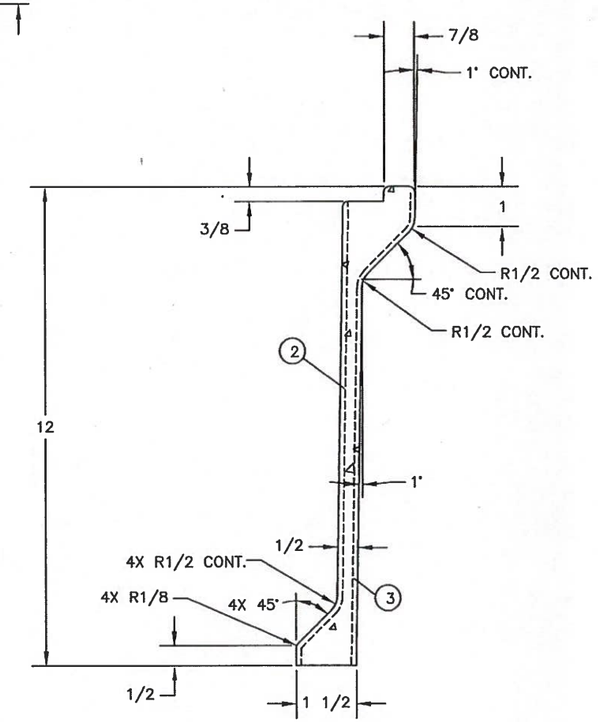

SECTION C-C
SCALE: HALF

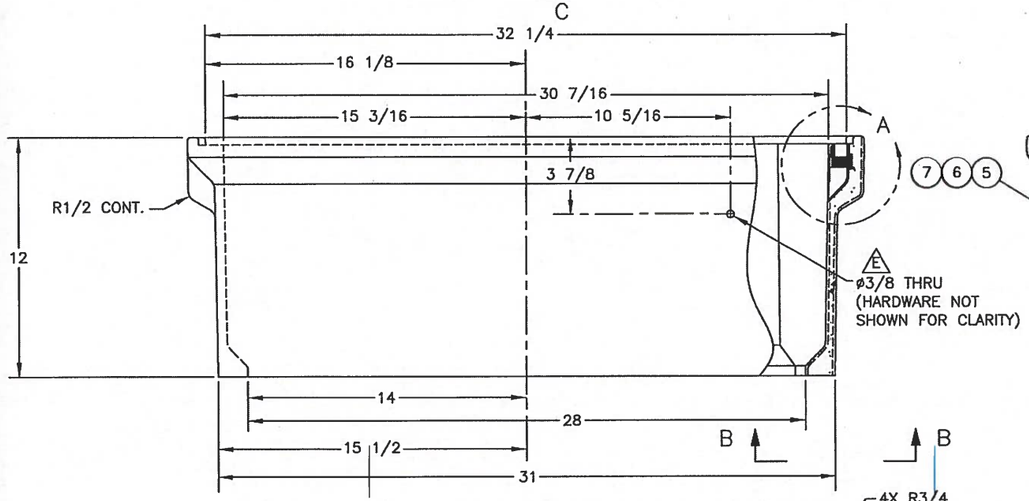

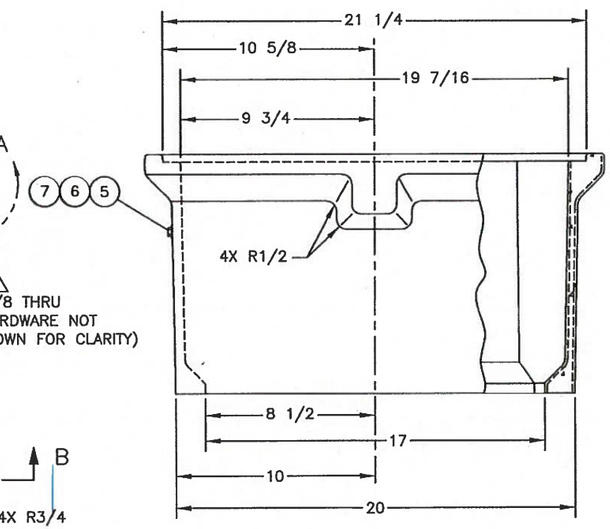

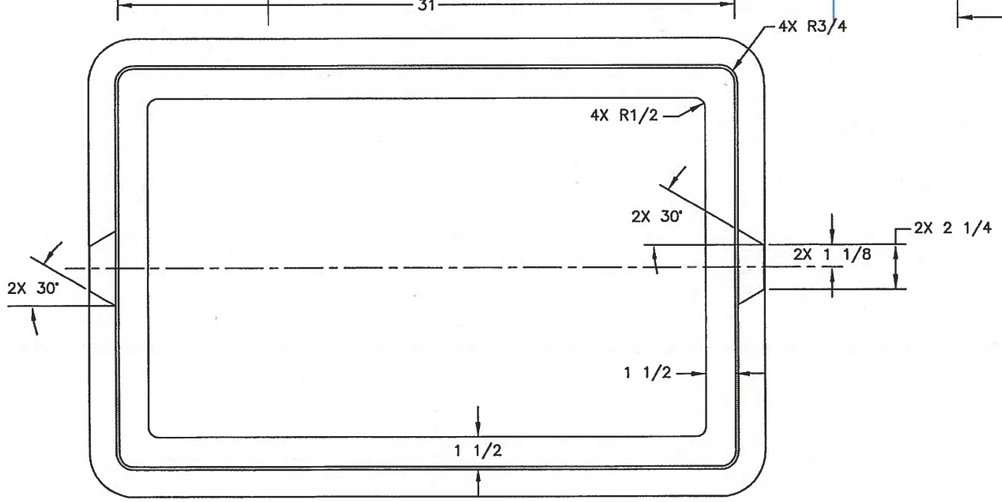

APPROVED AS NOTED
Washington State Department of Transportation
HQ Traffic Operations Office
BY: _____ DATE: 9/26/2016

GREGORY SCOTT CHRISTENSEN
STATE OF WASHINGTON
51987
REGISTERED
PROFESSIONAL ENGINEER

NOTES:

1. ALL FILLETS AND RADII TO BE 1/8 UNLESS OTHERWISE SPECIFIED.
2. FOR EZ-NUT RETAINER TOOLING SEE CT96108-2
3. RATED FOR TIER 15 APPLICATIONS

APPROVED
1. MAINT. _____
2. PROD. _____
3. QUALITY _____

STANDARD TOLERANCES
ALL DIMENSIONS ARE IN INCHES UNLESS OTHERWISE SPECIFIED
.0 ±.100
.00 ±.060
.000 ±.010
FRACTIONAL ±1/16
ANGULAR ±.5°

PROPRIETARY INFORMATION
THIS DRAWING EMBODIES PROPRIETARY AND CONFIDENTIAL INFORMATION, AND IS LOANED BY HUBBELL WITH THE UNDERSTANDING THAT IT WILL NOT BE DISCLOSED IN PART OR WHOLE, AND/OR BE USED FOR ANY PURPOSE OTHER THAN MAINTENANCE, FABRICATION, OR INSTALLATION, UNLESS EXPRESSLY AUTHORIZED, AND THAT IT BE RETURNED ON DEMAND.

HUBBELL
3621 INDUSTRIAL PARK DR
LENOIR CITY, TN 37771
800-346-3062
www.quazite.com

	BY	DATE
DRN	RJS	1/22/15
CHK		
ENG		
APR		
APR		

WEIGHT
SCALE
DRAWING DESCRIPTION: QUAZITE® BOX
LOC
REV D
3/16
PROJECT NUMBER 110611
DRAWING NUMBER PC1728B500-2-1

PART NUMBER	LOGO
PC1728S501U33	LT
PC1728S501U53	TEL
PC1728S501U23	ITS
PC1728S501U13	COMM
PC1728S501U43	TS

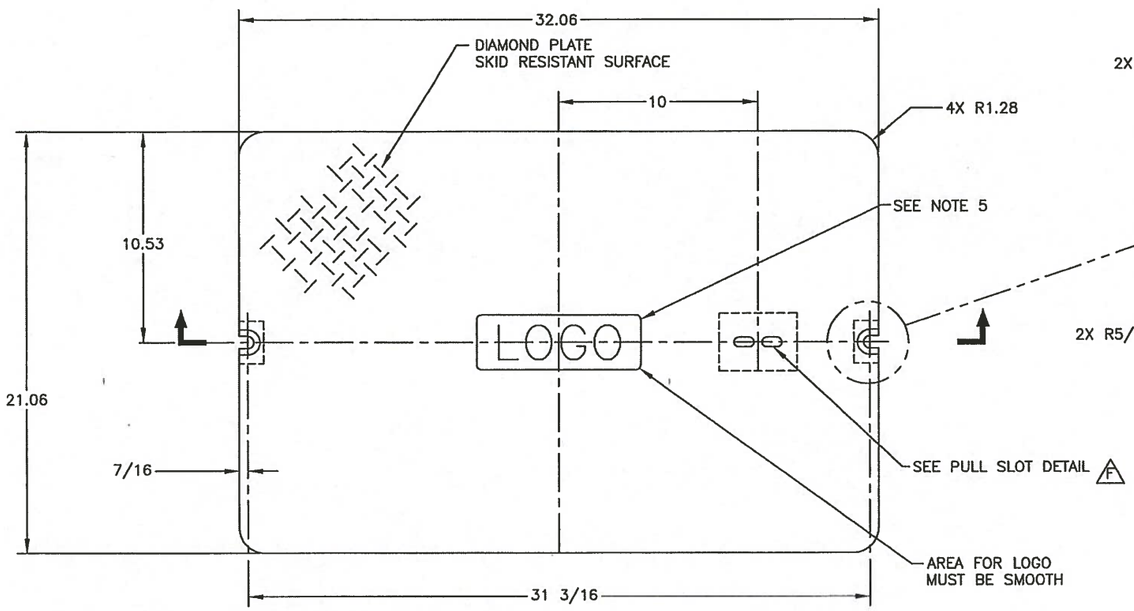

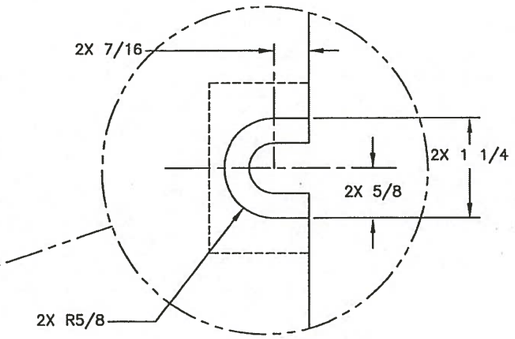

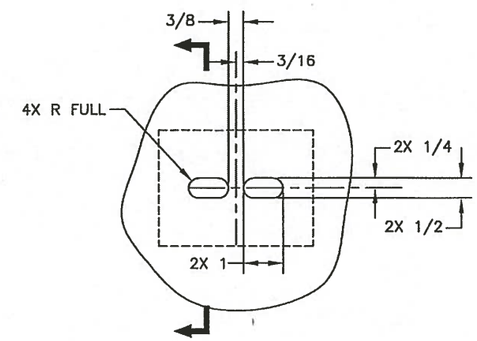

PULL SLOT DETAIL F
SCALE: HALF

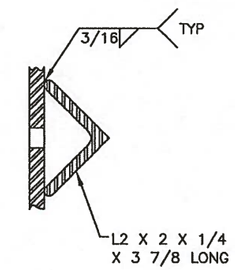

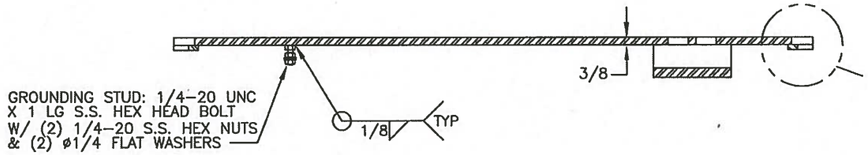

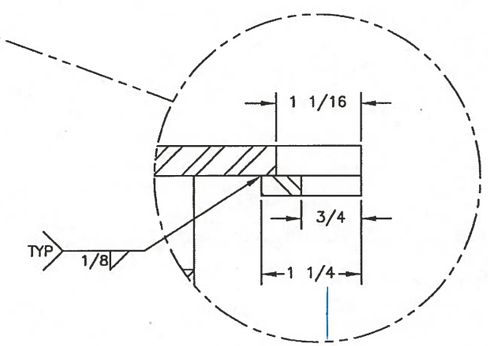

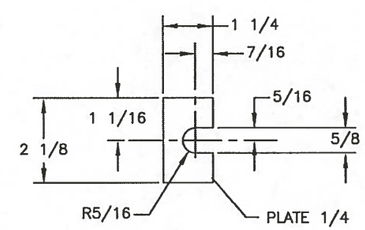

DETAIL 1
SCALE: HALF
2 REQUIRED

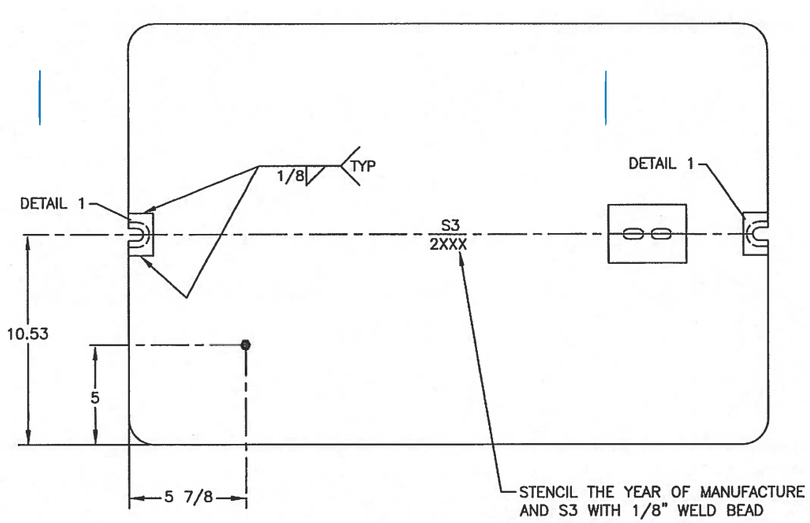

GREGORY SCOTT CHRISTENSEN
STATE OF WASHINGTON
21987
REGISTERED
PROFESSIONAL ENGINEER

APPROVED
Washington State Department of Transportation
HQ Traffic Operations Office
BY: [signature] DATE: 9/26/2016

NOTES:

1. ALL MATERIAL TO BE ASTM A36 OR EQUIVALENT
2. ALL WELD TO USE E-70 SERIES ELECTRODES; WELD PENETRATION NOT TO EXCEED 75% OF THINNER MATERIAL.
3. PAINTING:
   3.1. DEBURR, CLEAN MILL SCALE & SLAG, AND DEGREASE
   3.2. PAINT BLACK
4. THIS COVER IS RATED FOR A DESIGN LOAD OF 15,000 LBS.
5. LOGO TO BE 1" HIGH LETTERS USING 1/8" WELD BEAD.

APPROVED
1. MAINT. _____
2. PROD. _____
3. QUALITY _____

STANDARD TOLERANCES
ALL DIMENSIONS ARE IN INCHES UNLESS OTHERWISE SPECIFIED
.0 ±.100
.00 ±.060
.000 ±.010
FRACTIONAL ±1/16
ANGULAR ±.5°

PROPRIETARY INFORMATION
THIS DRAWING EMBODIES PROPRIETARY AND CONFIDENTIAL INFORMATION, AND IS LOANED BY HUBBELL WITH THE UNDERSTANDING THAT IT WILL NOT BE DISCLOSED IN PART OR WHOLE, AND/OR BE USED FOR ANY PURPOSE OTHER THAN MAINTENANCE, FABRICATION, OR INSTALLATION, UNLESS EXPRESSLY AUTHORIZED, AND THAT IT BE RETURNED ON DEMAND.

HUBBELL®
3621 INDUSTRIAL PARK DR
LENOIR CITY, TN 37771
800-348-3062
www.quazite.com

	BY	DATE
DRN	RS	5/18/15
CHK	JLBS	5/18/15
ENG		
APR		
APR		

WEIGHT 72#
SCALE
DRAWING DESCRIPTION: QUAZITE® STEEL COVER
LOG
REV F
5/15
PROJECT NUMBER
DRAWING NUMBER PC1728S501-2-1
SHEET 1 OF 1