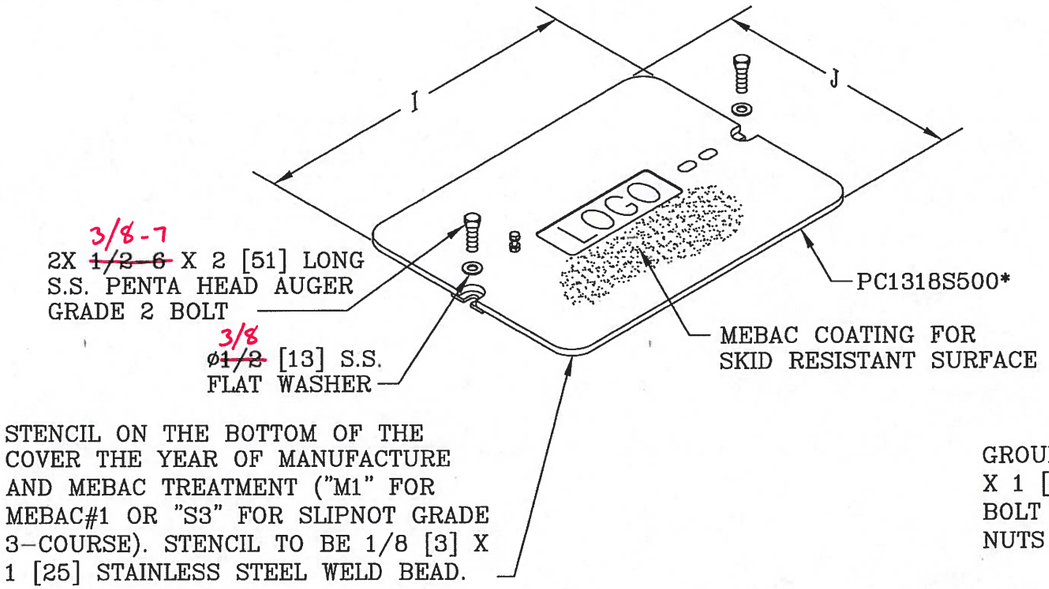

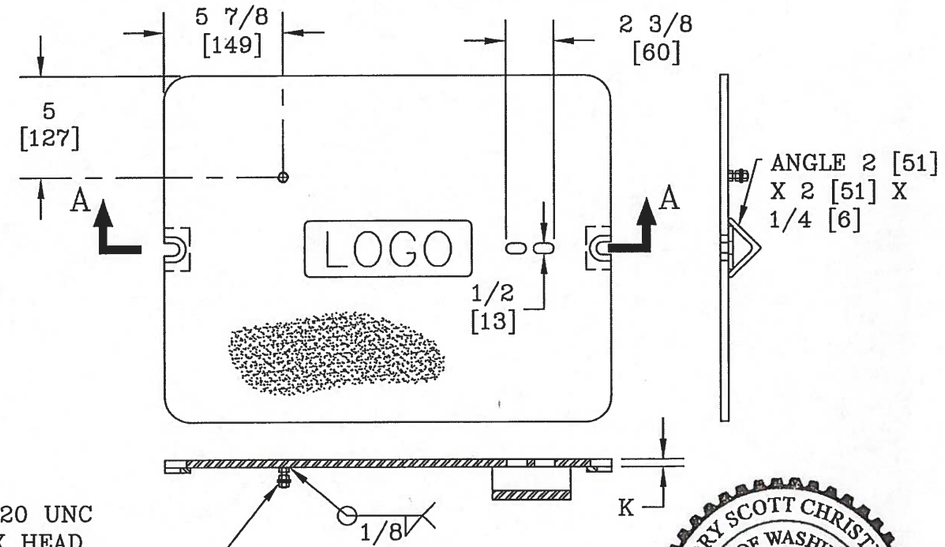

SECTION A-A

GREGORY SCOTT CHRISTENSEN
STATE OF WASHINGTON
21087
REGISTERED
PROFESSIONAL ENGINEER
9-13-16

APPROVED AS NOTED
Washington State Department of Transportation
HQ Traffic Operations Office
BY: _____ DATE: 9/23/2016

GROUNDING LOCATION
(5/16-18 UNC X 2 [51] LONG S.S. HEX HEAD GRADE 2 BOLT, ø5/16 [8] WASHER & 5/16-18 UNC HEX NUT)

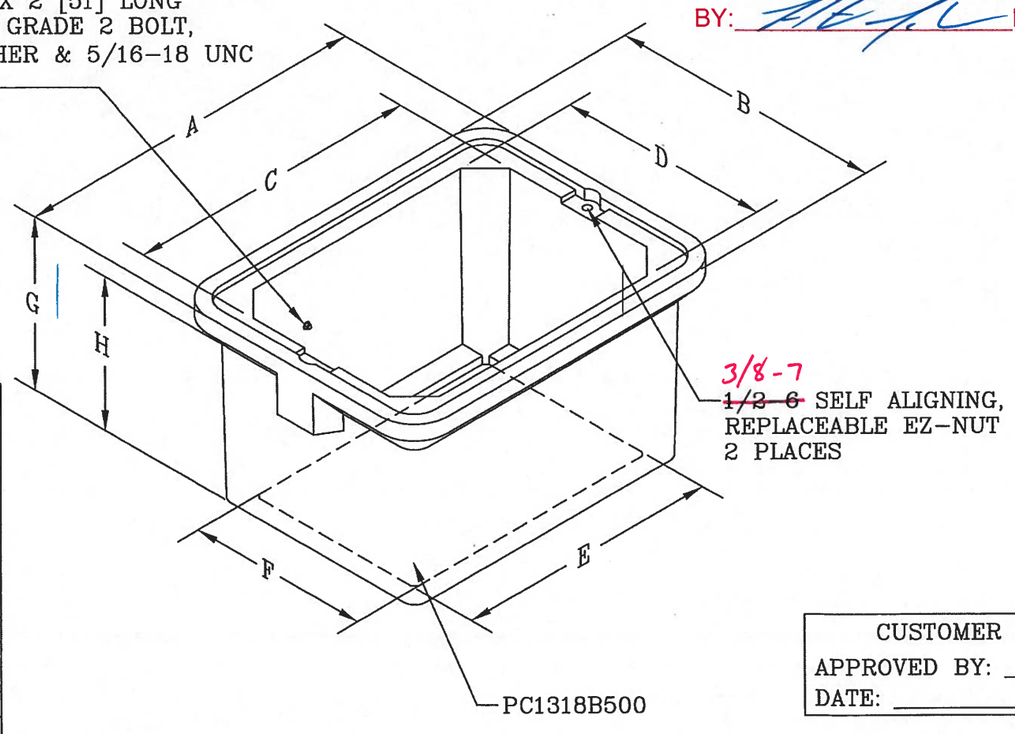

*LOGO CHART	
LOGO CODE	TEXT
U13	COMM
U23	ITS
U33	LT
U43	TS
U53	TEL

JUNCTION BOX DIMENSION TABLE		
MARK	ITEM	BOX TYPE 1
A	OUTSIDE LENGTH OF JUNCTION BOX	24
B	OUTSIDE WIDTH OF JUNCTION BOX	19
C	INSIDE LENGTH AT TOP OF BOX	20 7/16
D	INSIDE WIDTH AT TOP OF BOX	15 7/16
E	INSIDE LENGTH AT FOOT	18
F	INSIDE WIDTH AT FOOT	13
G	OVERALL HEIGHT OF BOX	12
H	HEIGHT OF BOX TO COVER LEDGE	11 5/8
I	COVER LENGTH	22 1/4
J	COVER WIDTH	17
K	COVER DEPTH	3/8

CUSTOMER APPROVAL
APPROVED BY: _____
DATE: _____

NOTES:

1. CUSTOMER IS WSDOT.
2. BOX AND COVER WILL MEET ALL TEST PROVISIONS OF THE ANSI/SCTE 77 TIER 15 LOADING REQUIREMENT.
3. THE COVER MATERIAL WILL MEET ASTM A36 & ASTM A786 REQUIREMENTS. COVER WILL HAVE THE MEBAC COATING OR EQUIVALENT, AND IS TO BE INOCULATED W/ ZINC CHROMATE AFTER FABRICATION.
4. INTERIOR BOX VOLUME IS 3,462 in^3.
5. 3/8-7 ~~1/2-6~~ AUGER BOLTS MEET THE REQUIRMENT FOR ASTM F 593.
6. ALL HARDWARE IS 18-8 STAINLESS STEEL.

DIMENSIONS ARE IN INCHES OR MILLIMETERS IN BRACKETS UNLESS OTHERWISE NOTED.

	BY	DATE
DRN	ARN	10/17/11
CHK	MEF	10/17/11
ENG		
APR		
APR		

WEIGHT 83# 38kg
SCALE N.T.S.
SIZE B

HUBBELL®
3621 INDUSTRIAL PARK DR
LENOIR CITY, TN 37771
800-346-3062
www.quazite.com

DRAWING DESCRIPTION
QUAZITE® 13 X 18 X 12
BOX & COVER ASSEMBLY

LOC LC S
REV L
8/16

PROJECT NUMBER 104334
SHEET 1 OF 2
DRAWING NUMBER PC1318Z500-1

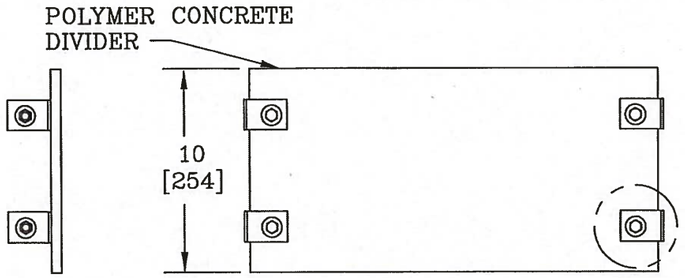

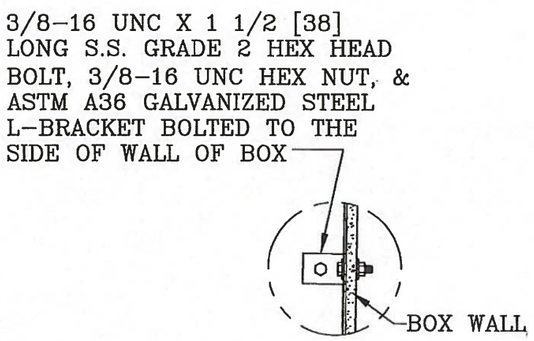

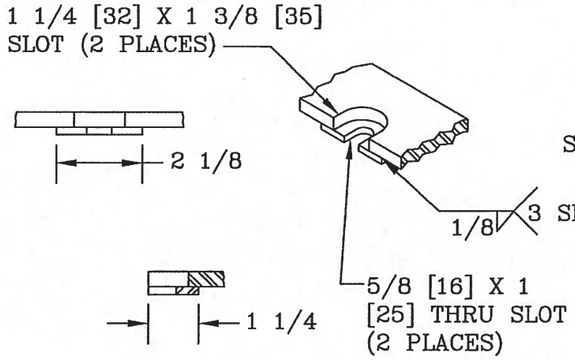

SLOT DETAIL
NTS

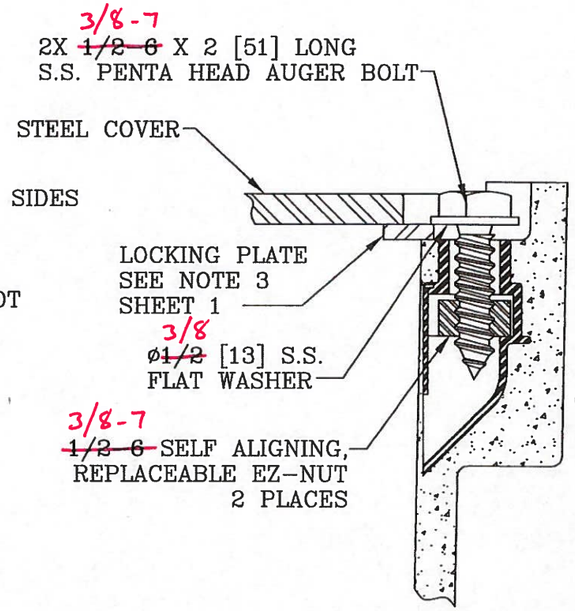

BOLT DOWN DETAIL
NTS

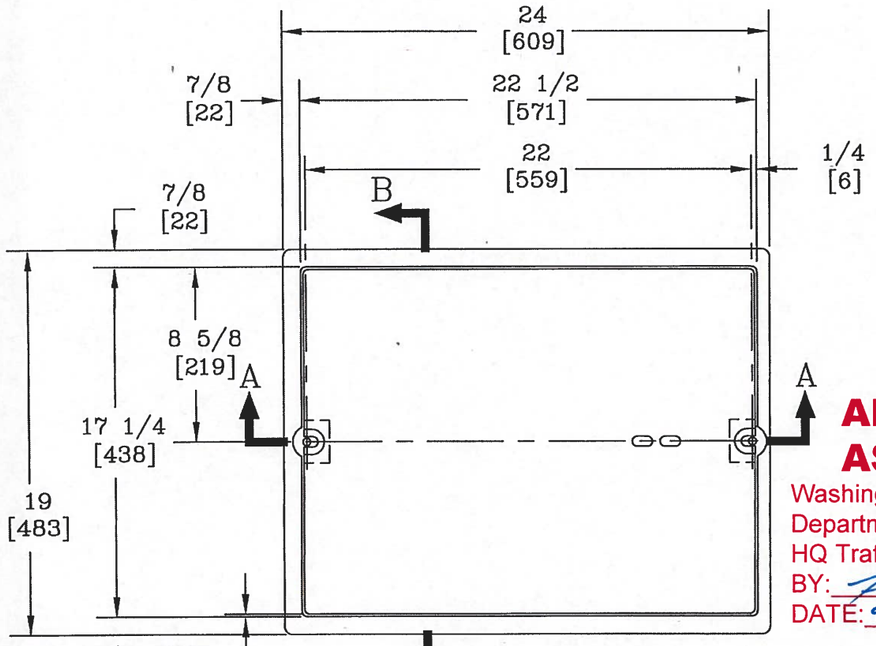

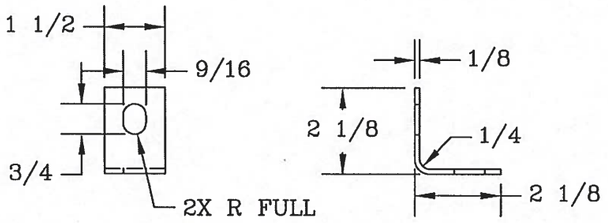

L–BRACKET DETAIL
SCALE: HALF

APPROVED AS NOTED
Washington State
Department of Transportation
HQ Traffic Operations Office
BY:
DATE: 9/23/2016

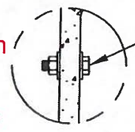

GROUNDING LOCATION
(5/16–18 UNC X 2 [51] LONG
S.S. HEX HEAD GRADE 2 BOLT,
ø5/16 [8] WASHER & 5/16–18 UNC
HEX NUT)

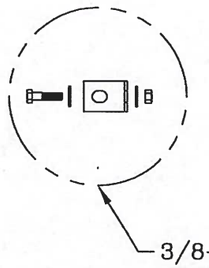

3/8–16 UNC X 1 1/2 [38]
LONG S.S. BOLT, 3/8
LOCK WASHER, BRACKET &
3/8–16 UNC HEX NUT

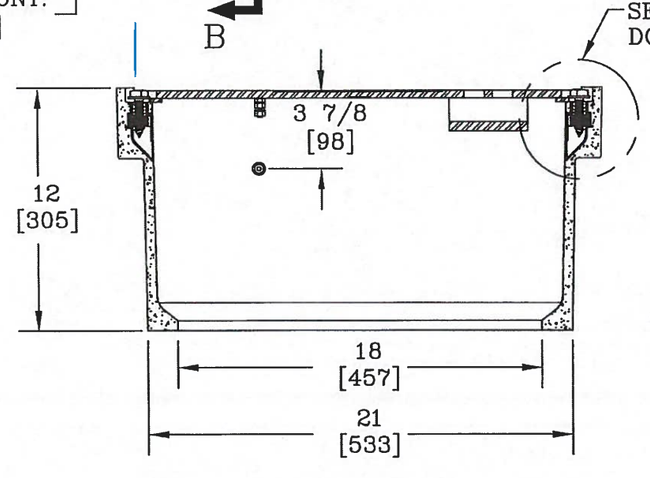

SECTION A–A

FOOT DETAIL
SCALE: HALF

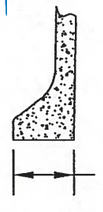

GROUNDING BOLT DETAIL
NTS

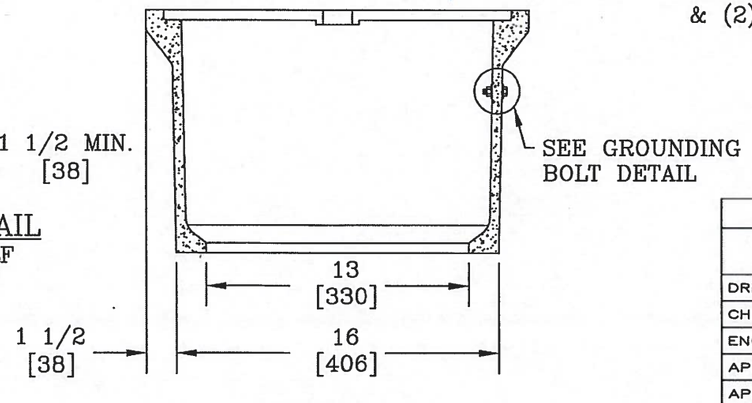

SECTION B–B

GROUNDING STUD: 1/4–20 UNC
X 3/4 [19] LONG S.S. HEX HEAD
BOLT W/ (2) 1/4–20 S.S. HEX NUTS
& (2) ø1/4 [6] FLAT WASHERS

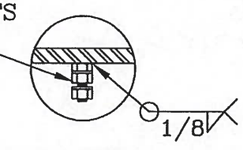

GROUNDING STUD DETAIL
NTS

DIMENSIONS ARE IN INCHES OR MILLIMETERS IN BRACKETS UNLESS OTHERWISE NOTED.

	BY	DATE
DRN	ARN	10/17/11
CHK	MEF	10/17/11
ENG		
APR		
APR		

WEIGHT 83# 38kg
SCALE NTS
SIZE B

HUBBELL®
3621 INDUSTRIAL PARK DR
LENOIR CITY, TN 37771
800–346–3062
www.quazite.com

DRAWING DESCRIPTION
QUAZITE® 13 X 18 X 12
BOX & COVER ASSEMBLY

LOC LC S
REV L 8/16

PROJECT NUMBER 104334
SHEET 2 OF 2
DRAWING NUMBER PC1318Z500–2

ITEM NO.	CAT.	PART NUMBER	DESCRIPTION 3/8-7	QUANTITY	UOM
1	L	C080422	INSERT EZ-NUT ~~1/2-6~~ COIL ASSY (FULL)	2.00	EA
2	L	C092260	FG 10 BA 78.00 X 12.00	1.00	EA
3	L	C092275	FG 10 BA 69.00 X 12.00	1.00	EA
4	L	C099200	MIX-UT BOX 15.5 PCT RESIN	60.00	LB
E 5	L	C082246	BOLT SS 5/16-18 X 2 HEX	1.00	EA
E 6	L	C082341	NUT SS 5/16-18 UNC HEX	1.00	EA
E 7	L	C080270	WASHER SS 5/16ID X 3/40D FLAT	1.00	EA

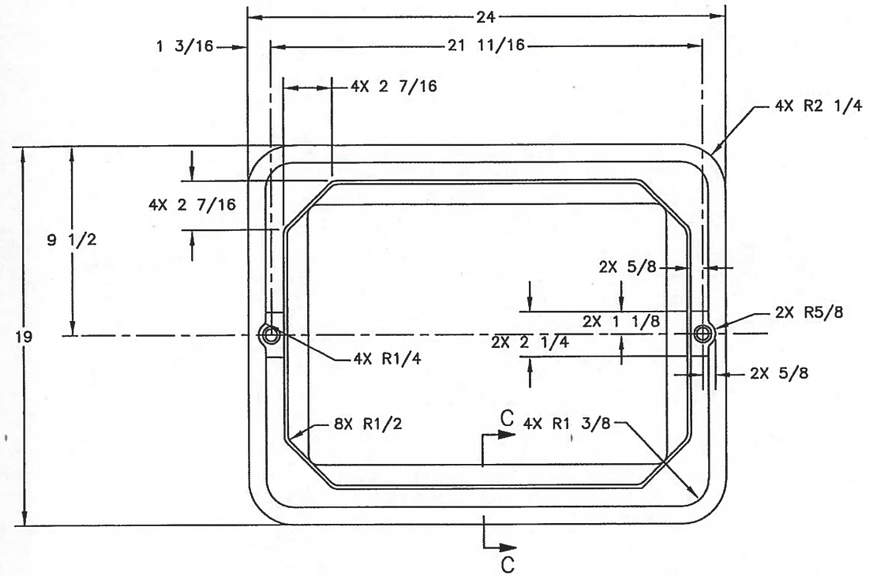

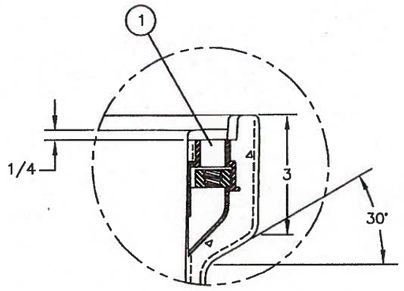

DETAIL A
SCALE: HALF
2 PLACES

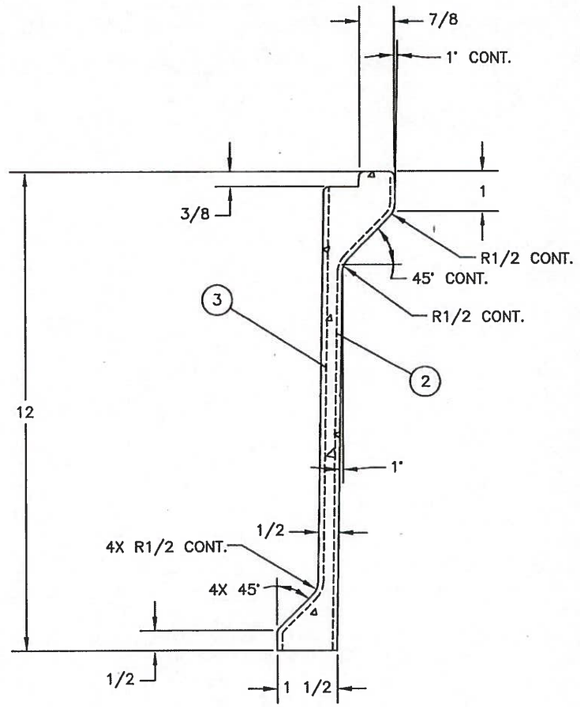

SECTION C-C
SCALE: HALF

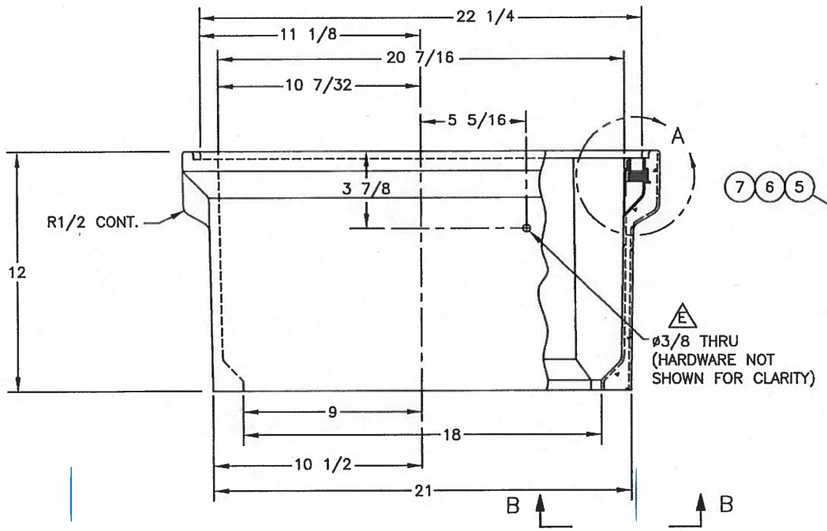

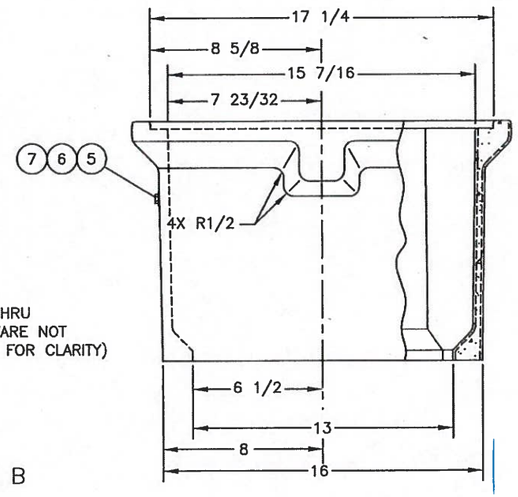

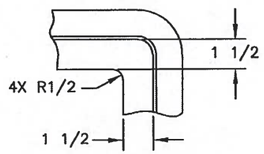

VIEW B-B
SCALE: FULL
4 PLACES

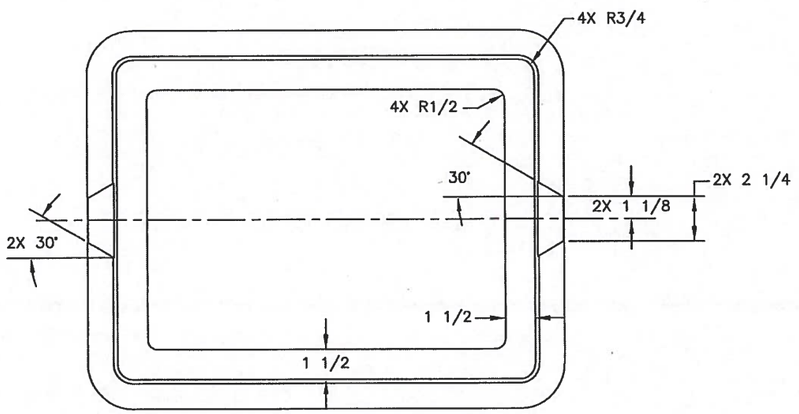

APPROVED AS NOTED
Washington State Department of Transportation
HQ Traffic Operations Office
BY: _____ DATE: 9/23/2016

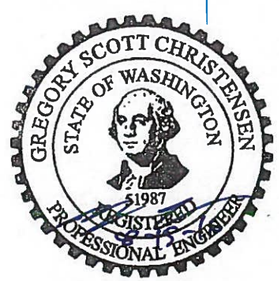

NOTES:

1. ALL FILLETS AND RADII TO BE 1/8 UNLESS OTHERWISE SPECIFIED.
2. FOR EZ-NUT RETAINER TOOLING SEE CT96108-2
3. RATED FOR TIER 15 APPLICATIONS.

APPROVED
1. MAINT. _____
2. PROD. _____
3. QUALITY _____

STANDARD TOLERANCES
ALL DIMENSIONS ARE IN INCHES UNLESS OTHERWISE SPECIFIED
.0 ±.100
.00 ±.060
.000 ±.010
FRACTIONAL ±1/16
ANGULAR ±.5°

PROPRIETARY INFORMATION
THIS DRAWING CONTAINS PROPRIETARY AND CONFIDENTIAL INFORMATION, AND IS LOANED BY HUBBELL WITH THE UNDERSTANDING THAT IT WILL NOT BE DISCLOSED IN PART OR WHOLE, AND/OR BE USED FOR ANY PURPOSE OTHER THAN MANUFACTURE, FABRICATION, OR INSTALLATION, UNLESS EXPRESSLY AUTHORIZED, AND THAT IT BE RETURNED ON DEMAND.

HUBBELL
3821 INDUSTRIAL PARK DR
LENOIR CITY, TN 37771
800-346-3082
www.quazite.com

	BY	DATE
DRN	RJT	1/22/15
CHK		
ENG		
APR		
APR		

WEIGHT
SCALE
DRAWING DESCRIPTION: QUAZITE® BOX
LOC
REV: E
3/18
PROJECT NUMBER: 104334
SHEET 1 OF 1
DRAWING NUMBER: PC1318B500-2-1

PART NUMBER	LOGO
PC1318S500U33	LT
PC1318S500U53	TEL
PC1318S500U23	ITS
PC1318S500U13	COMM
PC1318S500U43	TS

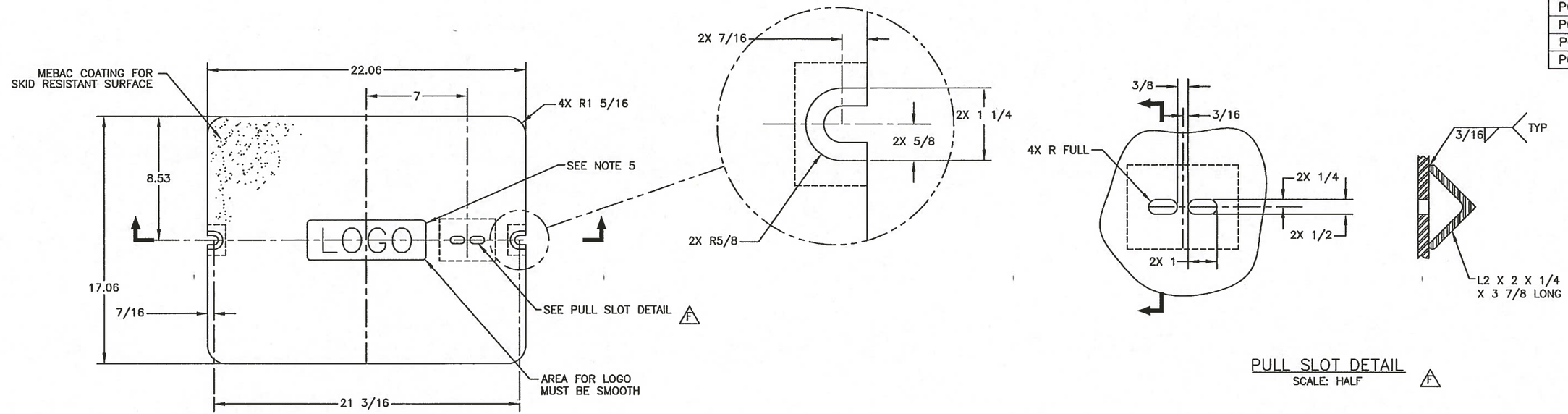

PULL SLOT DETAIL
SCALE: HALF

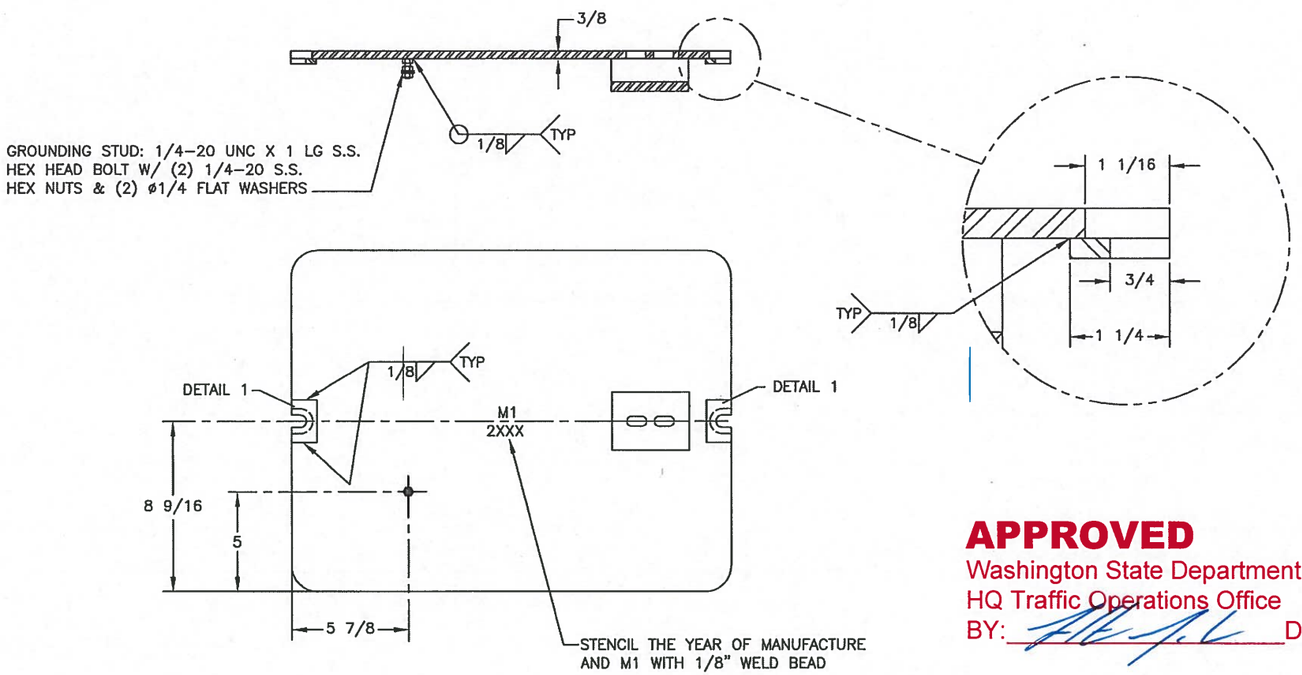

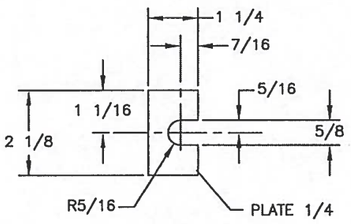

DETAIL 1
SCALE: HALF
2 REQUIRED

APPROVED
Washington State Department of Transportation
HQ Traffic Operations Office
BY: [signature] DATE: 9/23/2016

NOTES:

1. ALL MATERIAL TO BE ASTM A36 OR EQUIVALENT
2. ALL WELD TO USE E-70 SERIES ELECTRODES; WELD PENETRATION NOT TO EXCEED 75% OF THINNER MATERIAL.
3. PAINTING:
   3.1. DEBURR, CLEAN MILL SCALE & SLAG, AND DEGREASE
   3.2. APPLY SKID RESISTANT COATING AFTER FABRICATION
   3.3. HOT DIP GALVANIZE AFTER COATING
4. THIS COVER IS RATED FOR A DESIGN LOAD OF 15,000 LBS.
5. LOGO TO BE 1" HIGH LETTERS USING 1/8" WELD BEAD.

APPROVED
1. MAINT. _____.
2. PROD. _____.
3. QUALITY _____.

STANDARD TOLERANCES
ALL DIMENSIONS ARE IN INCHES UNLESS OTHERWISE SPECIFIED
.0.....±.100
.00.....±.060
.000.....±.010
FRACTIONAL.....±1/16
ANGULAR.....±.5°

PROPRIETARY INFORMATION
THIS DRAWING EMBODIES PROPRIETARY AND CONFIDENTIAL INFORMATION, AND IS LOANED BY HUBBELL WITH THE UNDERSTANDING THAT IT WILL NOT BE DISCLOSED IN PART OR WHOLE, AND/OR BE USED FOR ANY PURPOSE OTHER THAN MAINTENANCE, FABRICATION, OR INSTALLATION, UNLESS EXPRESSLY AUTHORIZED AND THAT IT IS RETURNED ON DEMAND.

HUBBELL
3621 INDUSTRIAL PARK DR
LENOIR CITY, TN 37771
800-346-3062
www.quazite.com

	BY	DATE
DRN	RS	3/27/15
CHK	MEG	3/27/15
ENG		
APR		
APR		

WEIGHT 40#
SCALE
DRAWING DESCRIPTION: QUAZITE® STEEL COVER
LOG
REV F
8/16
PROJECT NUMBER
DRAWING NUMBER PC1318S500-2-1