GENERAL NOTES

1. THE CABINETS SHOWN IN THESE DETAILS ARE SHOWN FOR ILLUSTRATIVE PURPOSES ONLY. THE CONTRACTOR SHALL VERIFY WHICH CABINET TYPES ARE CALLED OUT FOR INSTALLATION IN THE PLANS AND SUBSTITUTE THOSE CABINETS IN PLACE OF THE CABINETS SHOWN IN THESE DETAILS. THE CONTRACTOR SHALL INSTALL EACH CABINET TYPE IN THE LOCATIONS SHOWN IN THESE DETAILS.
2. THE CONTRACTOR SHALL INSTALL THE CONDUITS IN THE LOCATIONS SHOWN IN THESE DETAILS.
3. THE GROUND RODS, DRAIN TILES, ASSOCIATED CONDUITS, AND #4 REBAR- 90 DEGREE WITH 30" LEGS ARE ONLY REQUIRED IN FOUNDATIONS THAT WILL HAVE EITHER A TRANSFORMER OR SERVICE CABINET INSTALLED ON IT. THE GROUND RODS, DRAIN TILES, ASSOCIATED CONDUITS, AND #4 REBAR- 90 DEGREE WITH 30" LEGS CAN BE OMITTED FROM ALL OTHER FOUNDATIONS.
4. THE CABINETS SHALL BE ATTACHED TO THE FOUNDATION WITH 4 EACH,½"x8"x2"x4" HOT DIP GALVANIZED ANCHOR BOLTS, HOT DIP WASHERS AND HOT DIP NUTS. AS AN ALTERNATIVE, THE CABINETS SHALL BE ATTACHED TO THE FOUNDATION WITH STAINLESS STEEL EPOXY ANCHORS PER THE MANUFACTURER'S RECOMMENDATIONS. BOLTS SHALL EXTEND A MINIMUM OF 1- 1 / 2" AND A MAXIMUM OF 2" ABOVE THE CONCRETE PAD.
5. ALL REINFORCING STEEL SHALL HAVE A MINIMUM OF 2" CLEAR COVER.
6. PLACE A ½" BEAD OF SILICONE BETWEEN CABINETS AND THE FOUNDATION.
7. SEE STANDARD PLAN J-9a "TYPICAL GROUNDING DETAILS" FOR GROUNDING DETAILS. TWO GROUND RODS ARE REQUIRED FOR FOUNDATION WITH A SERVICE CABINET OR TRANSFORMER CABINET.
8. INSTALL CONDUITS AS INDICATED IN PLANS. CONDUIT SHALL EXTEND 2" ABOVE THE COUPLING.
9. CONCRETE SHALL BE CLASS 3000.
10. VERIFY DEAD FRONT LOCATION FROM MANUFACTURER PRIOR TO PLACING CONDUIT IN FOUNDATION.

CONSTRUCTION NOTES

1. DRIVE GROUND RODS BEFORE PLACING CONCRETE. MOVE ROD(S) AND DRAIN TILE(S) WITH COVER(S) AS REQUIRED TO ACHIEVE FULL GROUND PENETRATION. MAINTAIN A 6' MINIMUM CLEARANCE BETWEEN GROUND RODS AND 6" FROM FOUNDATION EDGE AS DETAILED ON STD. PLAN J-9a "TYPICAL GROUNDING DETAILS".
2. ALL GRS CONDUITS PENETRATING ALL CABINETS, SHALL BE TERMINATED WITH GROUNDING END BUSHING AND BONDED TO THE CABINET GROUNDING BUS. ALL PVC CONDUIT PENETRATING CABINET SHALL BE TERMINATED BELL BUSHING.
3. INSTALL CONDUIT COUPLINGS ON ALL CONDUITS. PLACE COUPLINGS FLUSH WITH TOP OF CONCRETE FOUNDATION. IF PVC CONDUITS SPECIFIED THE 2" CONDUIT STUB AND END BELL BUSHING SHALL NOT BE GLUED TO COUPLING.
4. 4" DIA. x 1 / 2 " DEEP SUMP. SLOPE FOUNDATION WITHIN CABINET FOOTPRINT TOWARDS SUMP. 3 / 8 " POLYETHYLENE OR COPPER DRAIN PIPE.
5. THE TYPE D SERVICE SHALL NOT BE INSTALLED ON 3 ½" RAISED SECTION. ALL OTHER CABINETS SHALL BE INSTALLED ON 3 ½" RAISED SECTION.

CONDUIT PLACEMENT LOCATION AREA (TRANSFORMER HIGH VOLTAGE CONDUIT AREA)

LOW VOLTAGE CONDUIT PLACEMENT LOCATION

CONTROLLER CABINET BASE	SIZE WxD	CAPACITY CONDUIT DIAMETER
TYPE 332	24" x 30"	12"
TYPE 332D	48.5" x 32"	24" *
NEMA P44	44" x 26"	15"
TYPE 334	24" x 30"	12"
TRANSFORMER	SIZE WxD	
UP TO 3 KVA	18" x 12"	8"
3.1 TO 12.5 KVA	24" x 20"	12"
12.6 TO 35.0 KVA	32" x 30"	15"
UNINTERRUPTABLE POWER SUPPLY	SIZE WxD	CAPACITY CONDUIT DIAMETER
ALPHA S4	16" x 16"	6"

*12" OF CONDUIT IN EACH LOCATION SHOWN

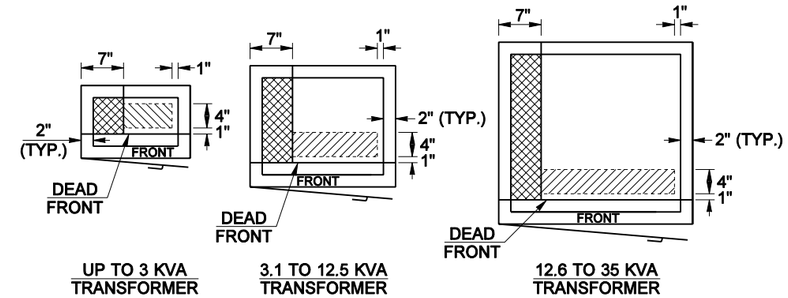

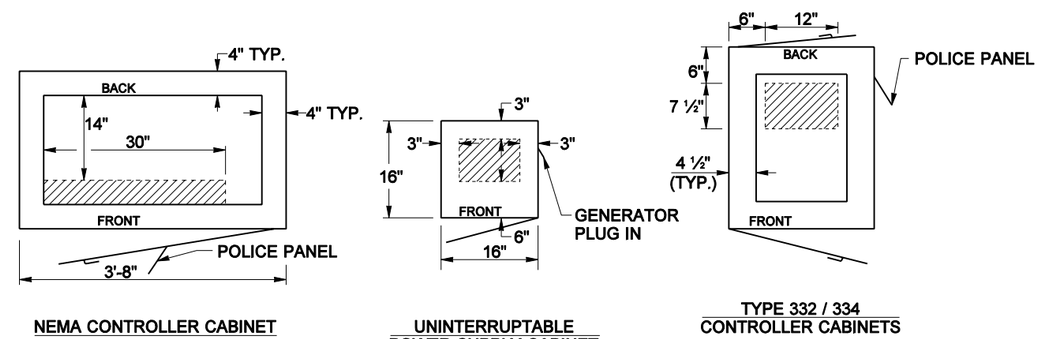

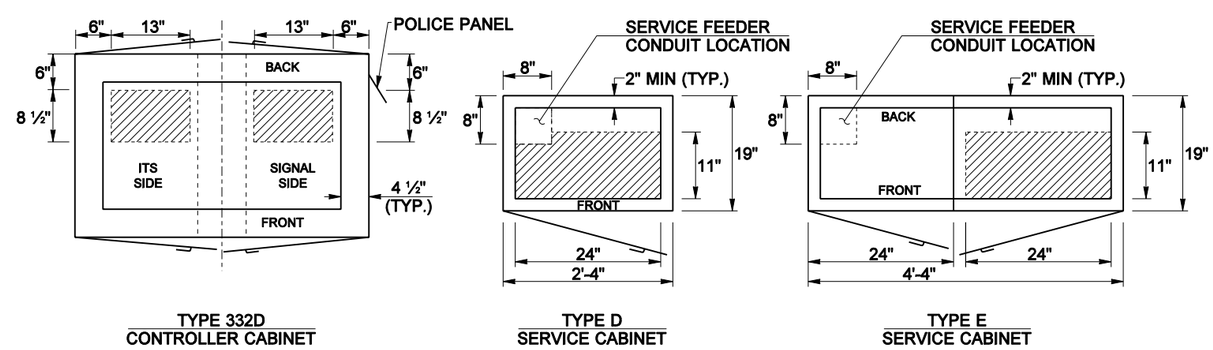

PLAN

CABINET FOOTPRINT & CONDUIT PLACEMENT LOCATIONS

FILE NAME	C:\AAWORK\control_e.dgn						
TIME	6:20:46 AM	P332 DIMENSION CHANGE	4-15-03	JH	REGION NO. 10	STATE WASH	FED.AID PROJ.NO.
DATE	4/23/2009	TITLE CHNG, NOTE EDITS	11-20-02	JH			
PLOTTED BY	trinhha	ADD TYP FOUND XSEC DETAIL, NOTES	1-6-09	JH	JOB NUMBER		
DESIGNED BY		8.01 NOW 3 SHTS 8.01-8.03	7-16-08	JH			
ENTERED BY		120V WIREWAY,MOVE EYE BOLT	4-17-08	JH			
CHECKED BY		ADD DET. GEN ANTI-THEFT EYE BT. BASE TO 3.5"(10")	2-6-08	JH	CONTRACT NO.		LOCATION NO.
PROJ. ENGR.		FNDATION CHANGED TO 24" ALL AROUND	1-2-08	JH			
REGIONAL ADM.		REVISION	DATE	BY			

P.E. STAMP BOX DATE

P.E. STAMP BOX DATE

Washington State Department of Transportation

CABINET ORIENTATION, CONDUIT LAYOUT AND FOUNDATION DETAIL

ENGLISH

PLOT1

8.01

SHEET 1 OF 5 SHEETS