H² PRE-CAST INC.
CONCRETE PRODUCTS

25TA VAULT

ELECTRIC

GENERAL NOTES:
LID TO BE PER TRAVIS INDUSTRIES PRODUCT,
PART NUMBERS:
700-00038 (DP) - DIAMOND PLATE
FRAME PART #
700-00037 (DP) - DIAMOND PLATE
CONCRETE fc=4000 PSI @ 28DAYS
HOT DIPPED GALV. PER 9-29.2(2)A

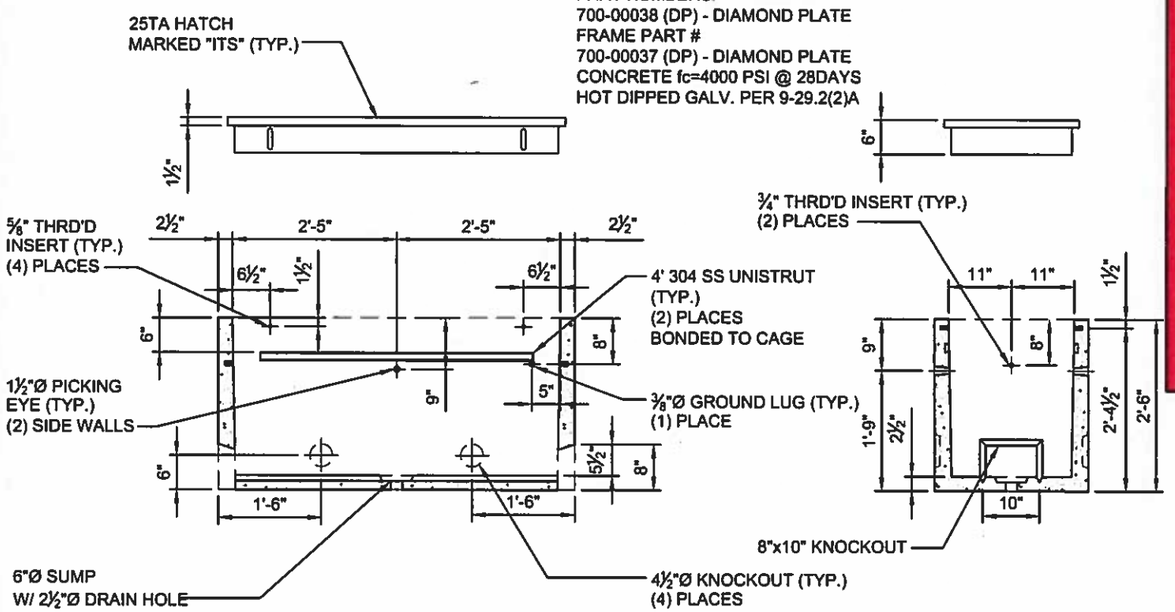

SECTION A

SECTION B

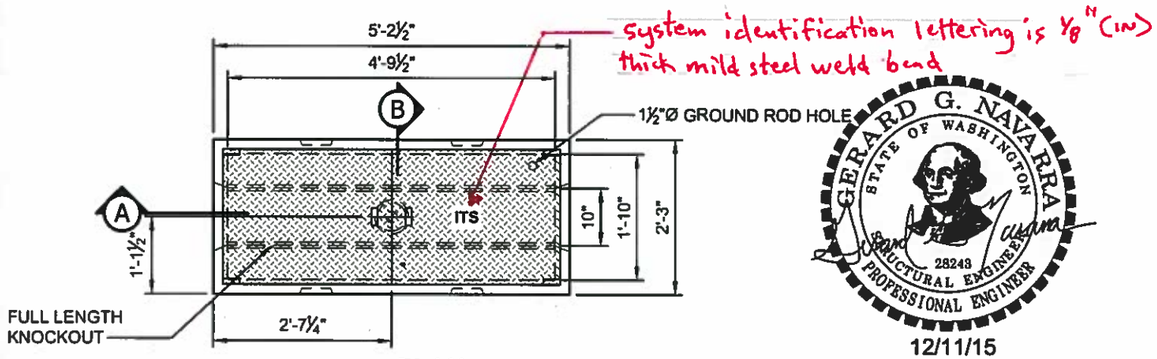

system identification lettering is ⅛" (IN) thick mild steel weld bend

PLAN

GERARD G. NAVARRA
STATE OF WASHINGTON
28243
STRUCTURAL ENGINEER
PROFESSIONAL ENGINEER
12/11/15

APPROVED AS NOTED
Washington State
Department of Transportation
HQ Traffic Operations Office
DATE Dec 15, 2015 TAT

GENERAL NOTES:
1. THE ASSEMBLY IS CONSTRUCTED AND TESTED TO CONFORM WITH WSDOT STANDARD SPECIFICATION 9-29.2(2), STANDARD DUTY CABLE VAULTS

H² Pre-Cast Inc.
3835 N. Clemons
East Wenatchee, WA

Phone: (509) 884-6644
Fax: (509) 884-4567
Web: www.h2precast.com

© 2007 H² Pre-Cast Inc.

THE INFORMATION CONTAINED IN THIS DRAWING IS THE SOLE PROPERTY OF H² PRECAST INC. ANY REPRODUCTION IN PART OR WHOLE WITHOUT THE WRITTEN PERMISSION OF FM&M IS PROHIBITED.

This assembly is constructed and tested to conform with WSDOT Standard Specification 9-29.2(2), Standard Duty Junction Boxes.

REV	DESCRIPTION	DATE	INITIALS
A	ADDED NEW UNIT (SLIPNOT PLATE). ADDED UNIVERSAL DRAWING NOTE.	12/1/15	DK

GERARD G. NAVARRA
STATE OF WASHINGTON
28243
STRUCTURAL ENGINEER
PROFESSIONAL ENGINEER
12/11/15

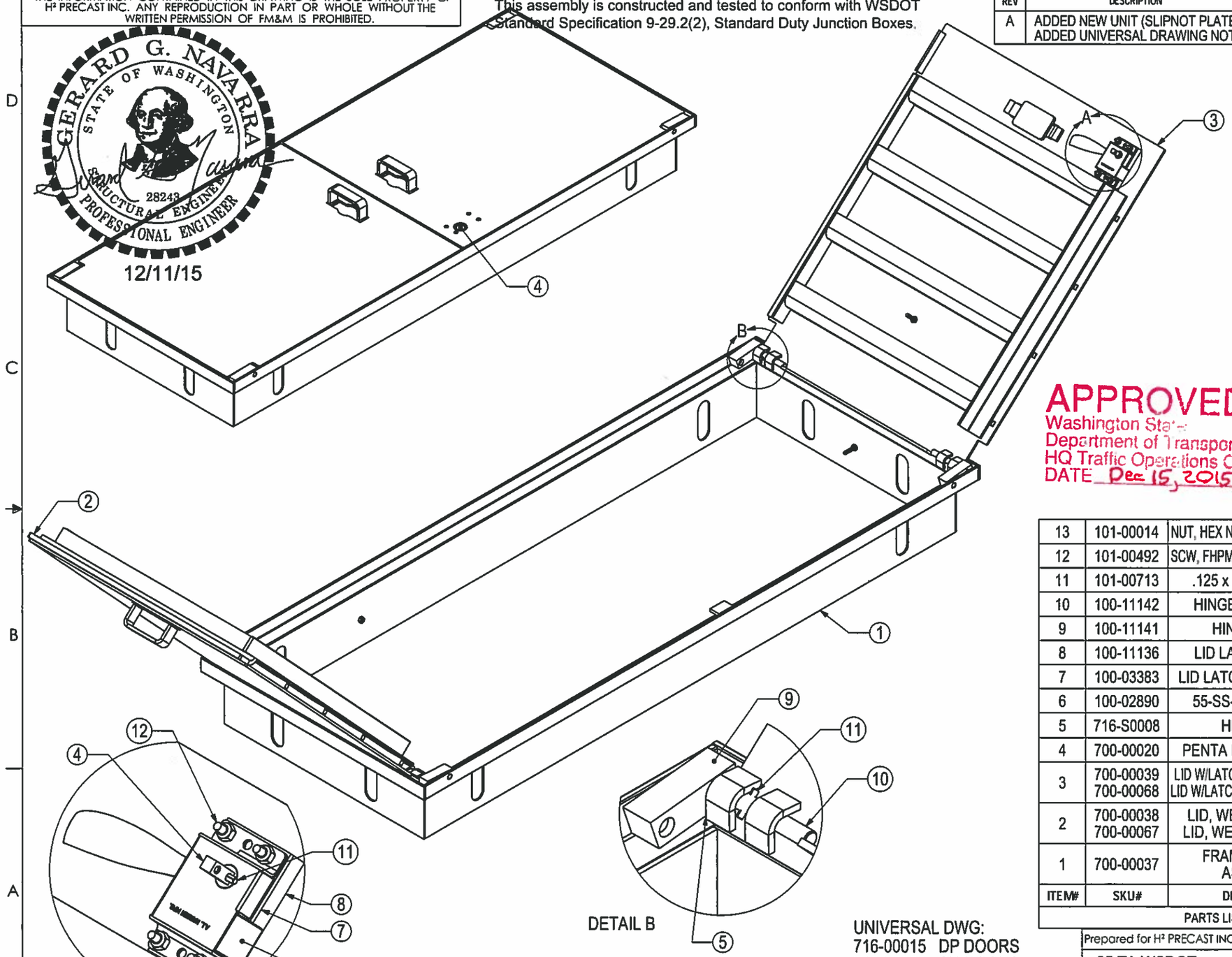

APPROVED
Washington State
Department of Transportation
HQ Traffic Operations Office
DATE Dec 15, 2015 TAT

ITEM#	SKU#	DESCRIPTION	QTY
13	101-00014	NUT, HEX NY-LOCK, 10-32 316SS	4
12	101-00492	SCW, FHPMS, 10-32 x1-1/2 316SS	4
11	101-00713	.125 x .750 ROLL PIN	5
10	100-11142	HINGE PIN [18-8 SS]	4
9	100-11141	HINGE BLOCK	4
8	100-11136	LID LATCH SPACER	1
7	100-03383	LID LATCH RBR GASKET	1
6	100-02890	55-SS-LH CAB LOCK	1
5	716-S0008	HINGE PAD	4
4	700-00020	PENTA HEAD PIN ASSY	1
3	700-00039 700-00068	LID W/LATCH, WELD ASS'Y (DP) LID W/LATCH, WELD ASS'Y (SNP)	1
2	700-00038 700-00067	LID, WELD ASS'Y (DP) LID, WELD ASS'Y (SNP)	1
1	700-00037	FRAME, WELDED ASSEMBLY	1

PARTS LIST

UNIVERSAL DWG:
716-00015 DP DOORS
716-00029 SN DOORS

THIS DRAWING CREATED FOR MANUFACTURING REFERENCE ONLY AND IS NOT INTENDED TO SUPERCEDE H² PRECAST INC. DRAWINGS OR SPECIFICATIONS OF THE REFERENCED PART.

Prepared for H² PRECAST INC.

25 TA WSDOT

SIZE	DRAWN BY:	PROGRAM NUMBER:	REV.
A	DREW KEIM	DATE CREATED: 2/15/13	A
SCALE :NONE	CAD FILE: 25 TA WSDOT-A	SHEET 1 of 1	

THE INFORMATION CONTAINED IN THIS DRAWING IS THE SOLE PROPERTY OF TRAVIS INDUSTRIES INC. ANY REPRODUCTION IN PART OR WHOLE WITHOUT THE WRITTEN PERMISSION OF TRAVIS INDUSTRIES INC. IS PROHIBITED.

This assembly is constructed and tested to conform with WSDOT Standard Specification 9-29.2(2), Standard Duty Junction Boxes.

REV	DESCRIPTION	DATE	INITIALS
C	MODIFIED WELD NOTES PER WSDOT	3/3/16	DK

GERARD G. NAVARRA
STATE OF WASHINGTON
28243
STRUCTURAL ENGINEER
PROFESSIONAL ENGINEER
3/03/16

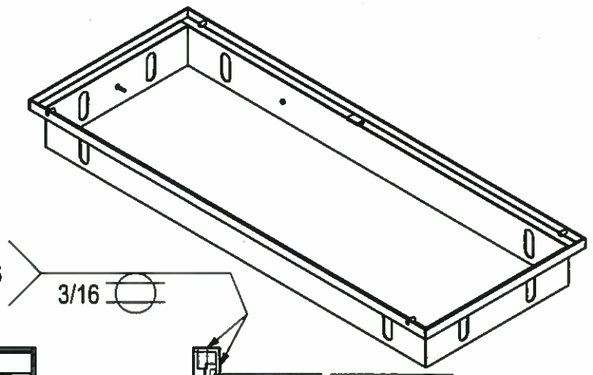

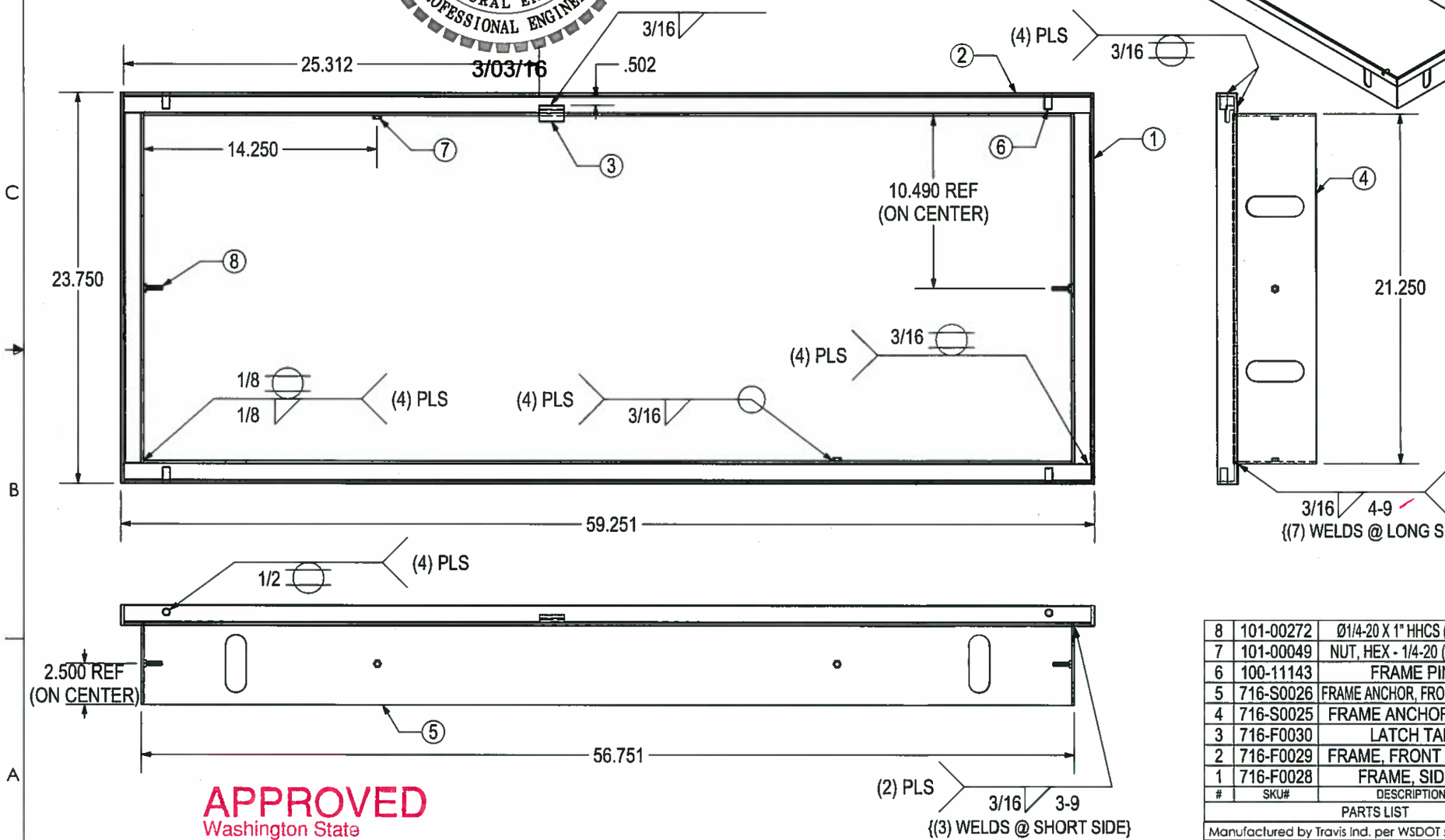

#	SKU#	DESCRIPTION	QTY.
8	101-00272	Ø1/4-20 X 1" HHCS (316SS)	2
7	101-00049	NUT, HEX - 1/4-20 (18-8SS)	2
6	100-11143	FRAME PIN	4
5	716-S0026	FRAME ANCHOR, FRONT / REAR	2
4	716-S0025	FRAME ANCHOR, SIDE	2
3	716-F0030	LATCH TAB	1
2	716-F0029	FRAME, FRONT / BACK	2
1	716-F0028	FRAME, SIDES	2

PARTS LIST

Manufactured by Travis Ind. per WSDOT specs

FRAME, WELDED ASSEMBLY

25 TA WSDOT

HOLES ± 0.003 X.XXX ± 0.060 ANGLES ± 1.0°	SIZE A	DRAWN BY: DREW KEIM	PROGRAM NUMBER: 700-00037 DATE CREATED: 2/15/13	REV. C
	SCALE :NONE	CAD FILE: 25 TA FRAME-C		SHEET 1 of 1

APPROVED
Washington State
Department of Transportation
HQ Traffic Operations Office
DATE March 14, 2016 TAT

THE INFORMATION CONTAINED IN THIS DRAWING IS THE SOLE PROPERTY OF H² PRECAST INC. ANY REPRODUCTION IN PART OR WHOLE WITHOUT THE WRITTEN PERMISSION OF FM&M IS PROHIBITED.

This assembly is constructed and tested to conform with WSDOT Standard Specification 9-29.2(2), Standard Duty Junction Boxes.

REV	DESCRIPTION	DATE	INITIALS
A	ADDED HARDWARE; 101-00272 (1) PLS. ADDED UNIVERSAL DRAWING NOTE.	12/1/15	DK

GERARD G. NAVARRA
STATE OF WASHINGTON
28243
STRUCTURAL ENGINEER
PROFESSIONAL ENGINEER
12/11/15

APPROVED
Washington State
Department of Transportation
HQ Traffic Operations Office
DATE Dec 15, 2015 TAT

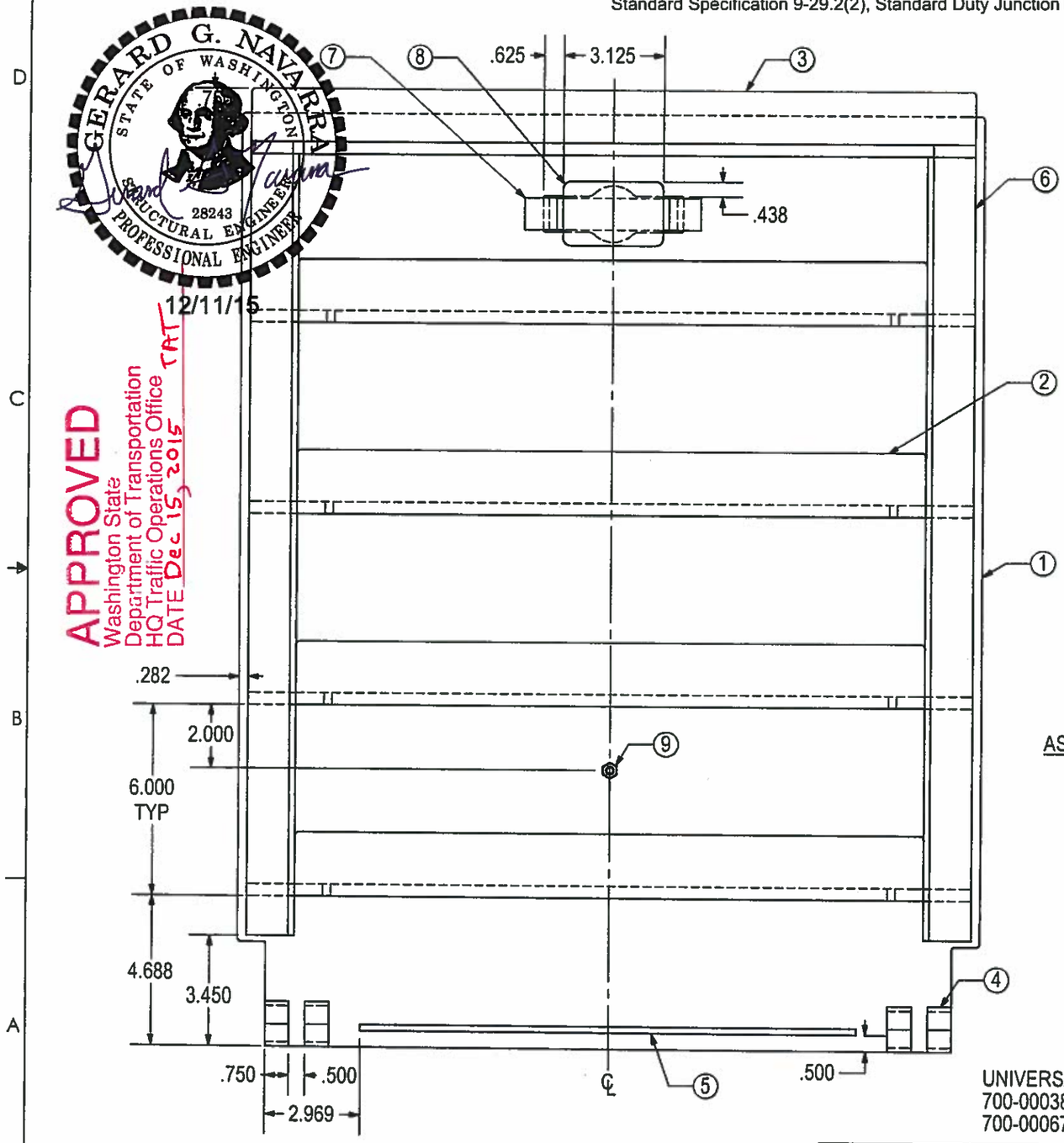

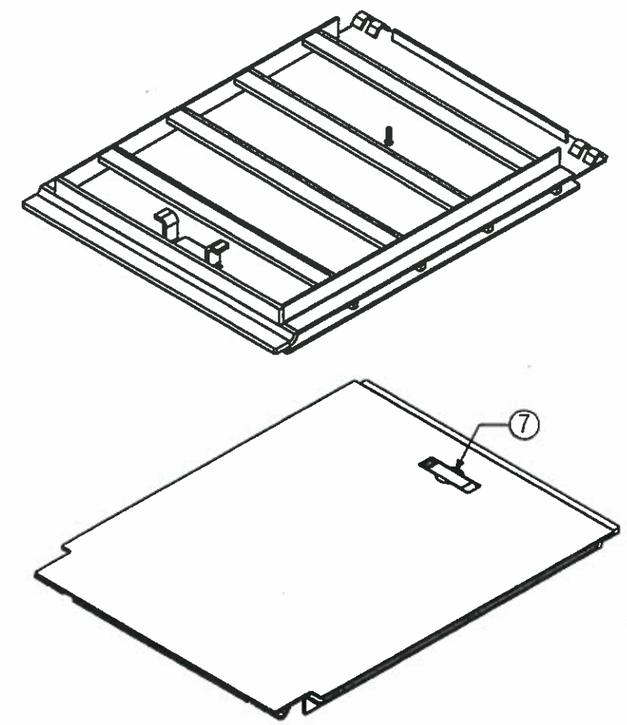

ASSEMBLY DETAIL

#	SKU#	DESCRIPTION	QTY
9	101-00272	Ø1/4-20 X 1" HHCS (316SS)	1
8	716-S0014	HANDLE STOP	1
7	716-F0031	HANDLE	1
6	716-F0027	LID SUPPORT, LONG	2
5	716-F0024	RIB, SIDE	1
4	716-F0004	RETAINER, HINGE PIN	4
3	716-S0024	CENTER CATCH, LID	1
2	716-S0023	LID SUPPORT, CENTER	4
1	716-S0022DP 716-S0022SN	LID (DIAMOND PLATE) LID (SLIPNOT PLATE)	1

PARTS LIST

UNIVERSAL DWG:
700-00038 DIAMOND PLATE LID
700-00067 SLIPNOT PLATE LID

THIS DRAWING CREATED FOR MANUFACTURING REFERENCE ONLY AND IS NOT INTENDED TO SUPERCEDE H² PRECAST INC. DRAWINGS OR SPECIFICATIONS OF THE REFERENCED PART.

Prepared for H² PRECAST INC. 25 TA WSDOT

LID, WELD SUB ASSEMBLY

SIZE	DRAWN BY:	PROGRAM NUMBER:	REV.
A	DREW KEIM	DATE CREATED: 2/15/13	A
SCALE :NONE	CAD FILE: 25 TA LID-A	SHEET 1 of 2	

THE INFORMATION CONTAINED IN THIS DRAWING IS THE SOLE PROPERTY OF H² PRECAST INC. ANY REPRODUCTION IN PART OR WHOLE WITHOUT THE WRITTEN PERMISSION OF FM&M IS PROHIBITED.

This assembly is constructed and tested to conform with WSDOT Standard Specification 9-29.2(2), Standard Duty Junction Boxes.

REV	DESCRIPTION	DATE	INITIALS
A	ADDED HARDWARE; 101-00272 (1) PLS. ADDED UNIVERSAL DRAWING NOTE.	12/1/15	DK

GERARD G. NAVARRA
STATE OF WASHINGTON
28243
STRUCTURAL ENGINEER
PROFESSIONAL ENGINEER
12/11/15

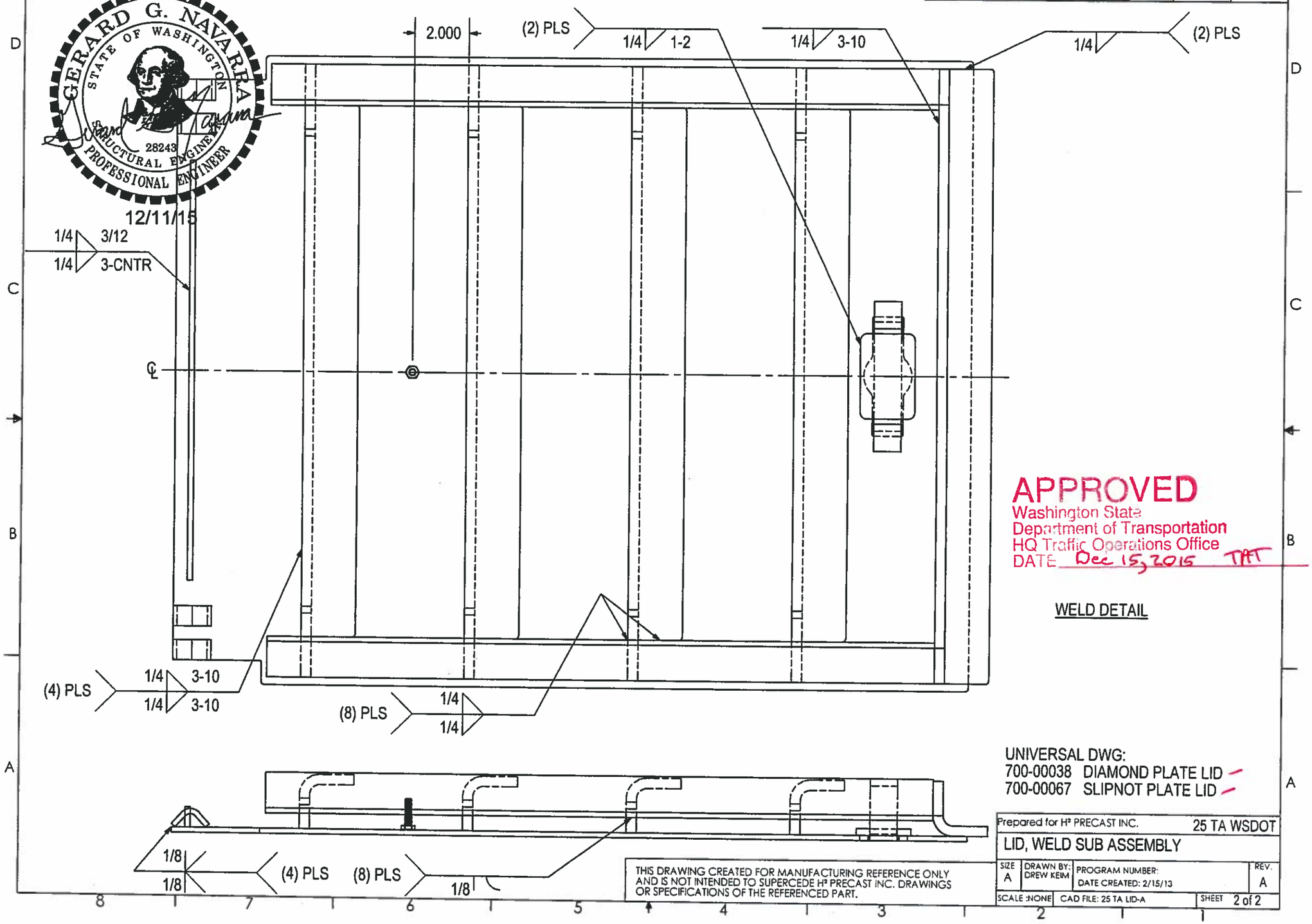

APPROVED
Washington State
Department of Transportation
HQ Traffic Operations Office
DATE Dec 15, 2015 TAT

WELD DETAIL

UNIVERSAL DWG:
700-00038 DIAMOND PLATE LID
700-00067 SLIPNOT PLATE LID

THIS DRAWING CREATED FOR MANUFACTURING REFERENCE ONLY AND IS NOT INTENDED TO SUPERCEDE H² PRECAST INC. DRAWINGS OR SPECIFICATIONS OF THE REFERENCED PART.

Prepared for H² PRECAST INC. 25 TA WSDOT

LID, WELD SUB ASSEMBLY

SIZE	DRAWN BY:	PROGRAM NUMBER:	REV.
A	DREW KEIM	DATE CREATED: 2/15/13	A
SCALE :NONE	CAD FILE: 25 TA LID-A		SHEET 2 of 2

THE INFORMATION CONTAINED IN THIS DRAWING IS THE SOLE PROPERTY OF H² PRECAST INC. ANY REPRODUCTION IN PART OR WHOLE WITHOUT THE WRITTEN PERMISSION OF FM&M IS PROHIBITED.

This assembly is constructed and tested to conform with WSDOT Standard Specification 9-29.2(2), Standard Duty Junction Boxes.

REV	DESCRIPTION	DATE	INITIALS
A	ADDED HARDWARE; 101-00272 (1) PLS. ADDED UNIVERSAL DRAWING NOTE.	12/1/15	DK

GERARD G. NAVARRA
STATE OF WASHINGTON
28243
STRUCTURAL ENGINEER
PROFESSIONAL ENGINEER
12/11/15

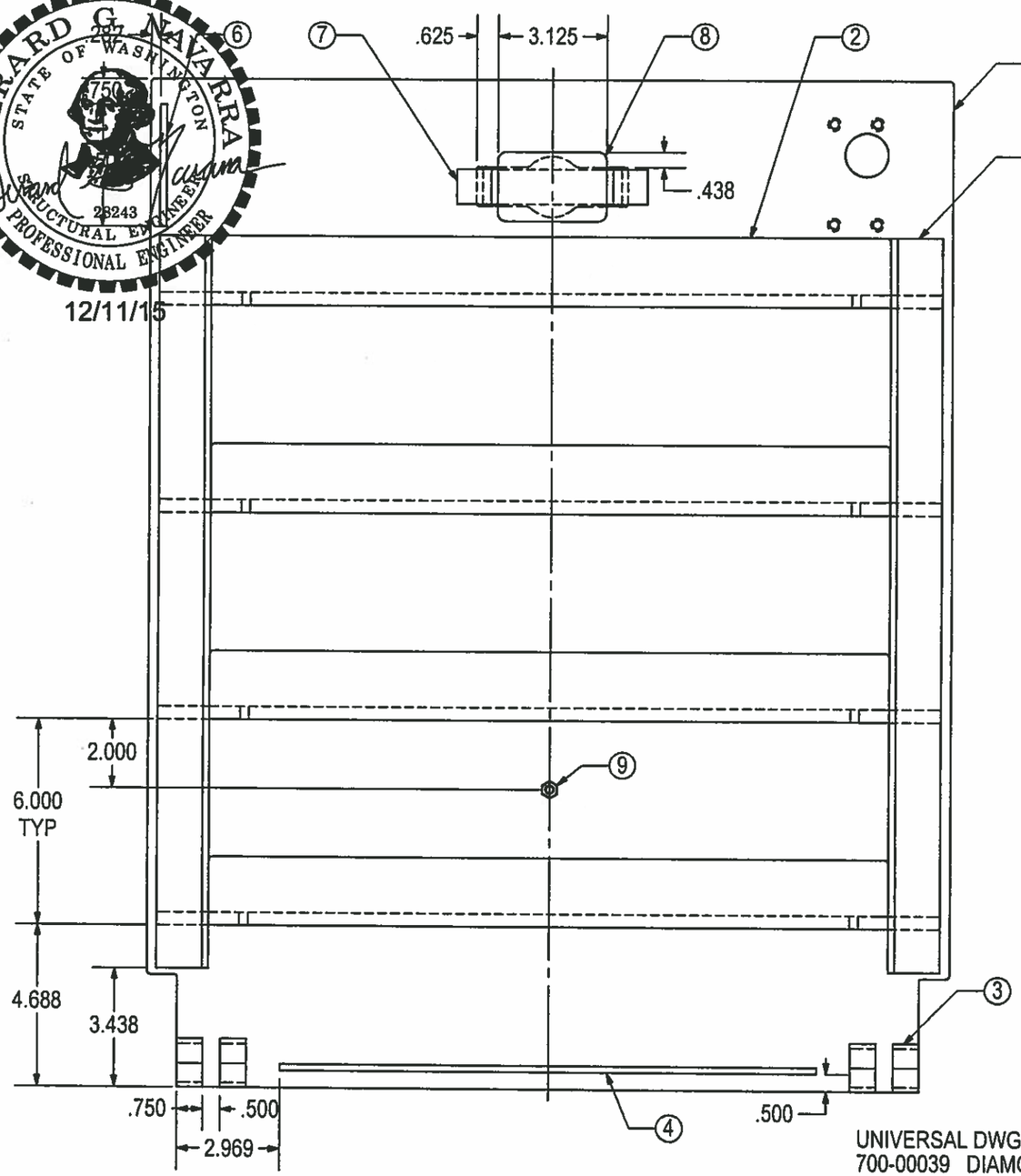

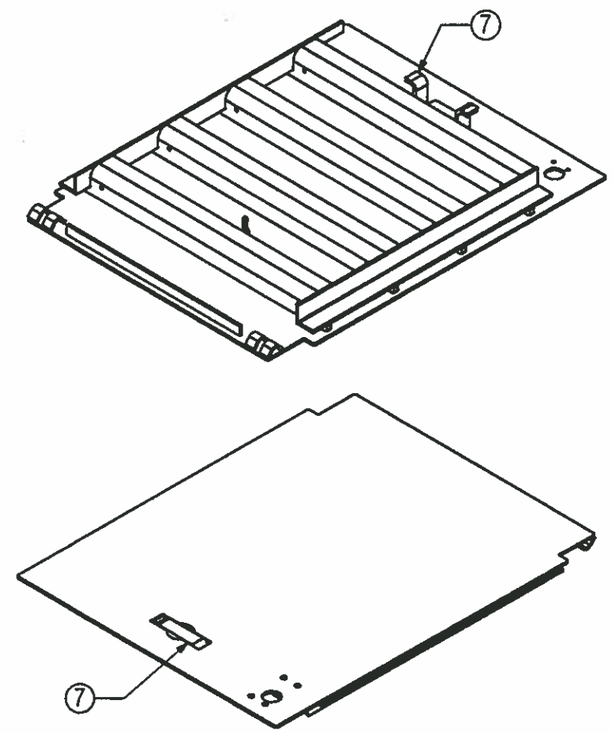

ASSEMBLY DETAIL

#	SKU#	DESCRIPTION	QTY
9	101-00272	Ø1/4-20 X 1" HHCS (316SS)	1
8	716-S0014	HANDLE STOP	1
7	716-F0031	HANDLE	1
6	716-F0026	RIB, CENTER	1
5	716-F0025	LID SUPPORT, SHORT	2
4	716-F0024	RIB, SIDE	1
3	716-F0004	RETAINER, HINGE PIN	4
2	716-S0023	LID SUPPORT, CENTER	4
1	716-S0021DP 716-S0021SN	LID W/ LATCH (DP) LID W/ LATCH (SNP)	1

PARTS LIST

UNIVERSAL DWG:
700-00039 DIAMOND PLATE LID W/ LATCH
700-00068 SLIPNOT PLATE LID W/ LATCH

THIS DRAWING CREATED FOR MANUFACTURING REFERENCE ONLY AND IS NOT INTENDED TO SUPERCEDE H² PRECAST INC. DRAWINGS OR SPECIFICATIONS OF THE REFERENCED PART.

Prepared for H² PRECAST INC. 25 TA WSDOT

LID W/ LATCH, WELD SUB ASSEMBLY

SIZE	DRAWN BY:	PROGRAM NUMBER:	REV.
A	DREW KEIM	DATE CREATED: 2/15/13	A
SCALE :NONE	CAD FILE: 25 TA LID (LATCH)-A	SHEET 1 of 2	

APPROVED
Washington State
Department of Transportation
HQ Traffic Operations Office
DATE Dec 15, 2015 TAT

THE INFORMATION CONTAINED IN THIS DRAWING IS THE SOLE PROPERTY OF H³ PRECAST INC. ANY REPRODUCTION IN PART OR WHOLE WITHOUT THE WRITTEN PERMISSION OF FM&M IS PROHIBITED.

This assembly is constructed and tested to conform with WSDOT Standard Specification 9-29.2(2), Standard Duty Junction Boxes.

REV	DESCRIPTION	DATE	INITIALS
A	ADDED HARDWARE; 101-00272 (1) PLS. ADDED UNIVERSAL DRAWING NOTE.	12/1/15	DK

GERARD G. NAVARRA
STATE OF WASHINGTON
28243
STRUCTURAL ENGINEER
LICENSED PROFESSIONAL ENGINEER
12/11/15

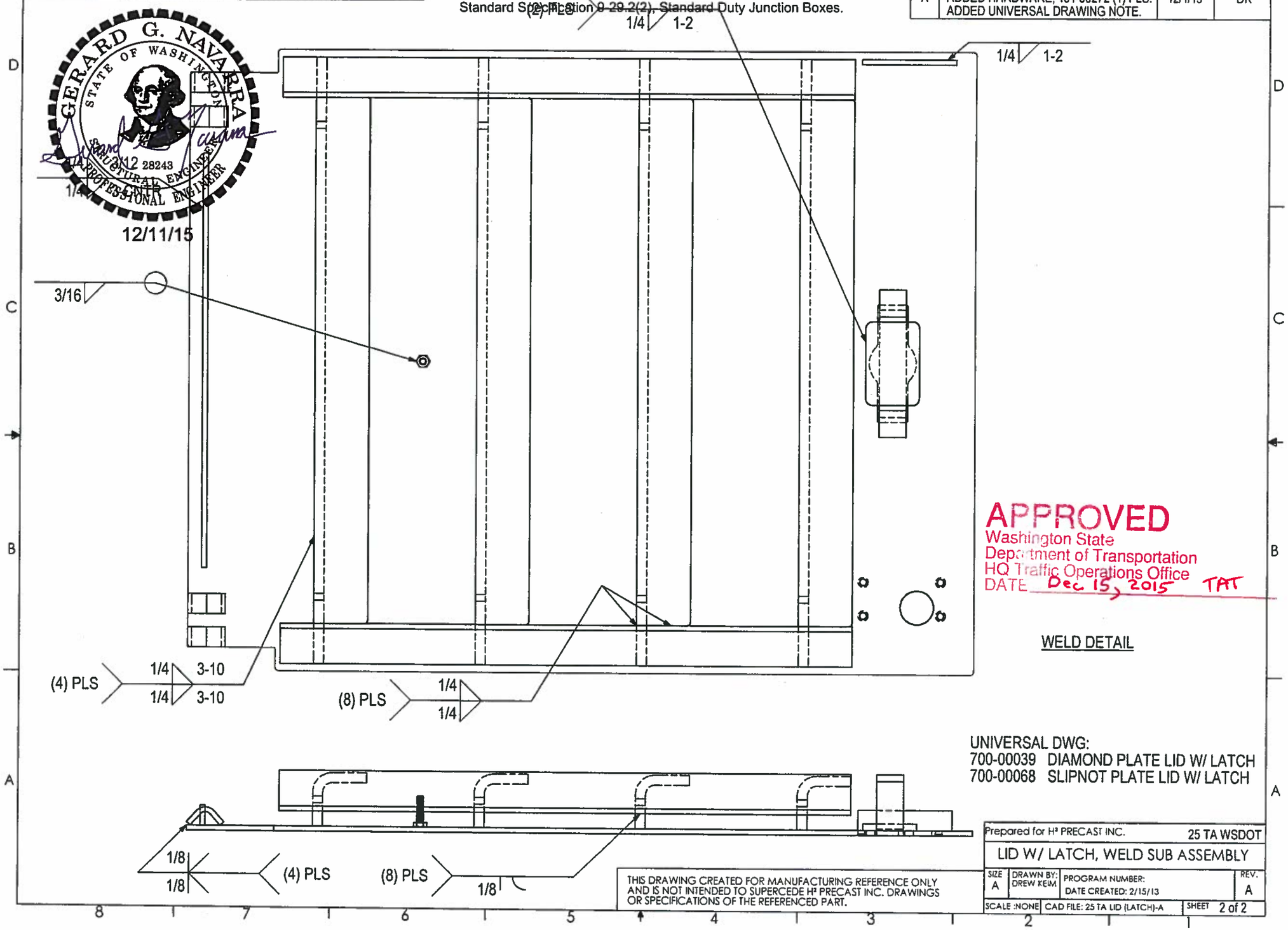

APPROVED
Washington State
Department of Transportation
HQ Traffic Operations Office
DATE Dec 15, 2015 TAT

WELD DETAIL

UNIVERSAL DWG:
700-00039 DIAMOND PLATE LID W/ LATCH
700-00068 SLIPNOT PLATE LID W/ LATCH

THIS DRAWING CREATED FOR MANUFACTURING REFERENCE ONLY AND IS NOT INTENDED TO SUPERCEDE H³ PRECAST INC. DRAWINGS OR SPECIFICATIONS OF THE REFERENCED PART.

Prepared for H³ PRECAST INC. 25 TA WSDOT

LID W/ LATCH, WELD SUB ASSEMBLY

SIZE	DRAWN BY:	PROGRAM NUMBER:	REV.
A	DREW KEIM	DATE CREATED: 2/15/13	A
SCALE :NONE	CAD FILE: 25 TA LID (LATCH)-A	SHEET 2 of 2	

THE INFORMATION CONTAINED IN THIS DRAWING IS THE SOLE PROPERTY OF H² PRECAST INC. ANY REPRODUCTION IN PART OR WHOLE WITHOUT THE WRITTEN PERMISSION OF FM&M IS PROHIBITED.

This assembly is constructed and tested to conform with WSDOT Standard Specification 9-29.2(2), Standard Duty Junction Boxes.

REV	DESCRIPTION	DATE	INITIALS
B	NOW UNIVERSAL PART / DRAWING; DIAMOND PLATE & SLIPNOT PLATE. 716-S0021XX WAS 716-S0021.	12/1/15	DK

GERARD G. NAVARRA
STATE OF WASHINGTON
28243
STRUCTURAL ENGINEER
PROFESSIONAL ENGINEER
12/11/15

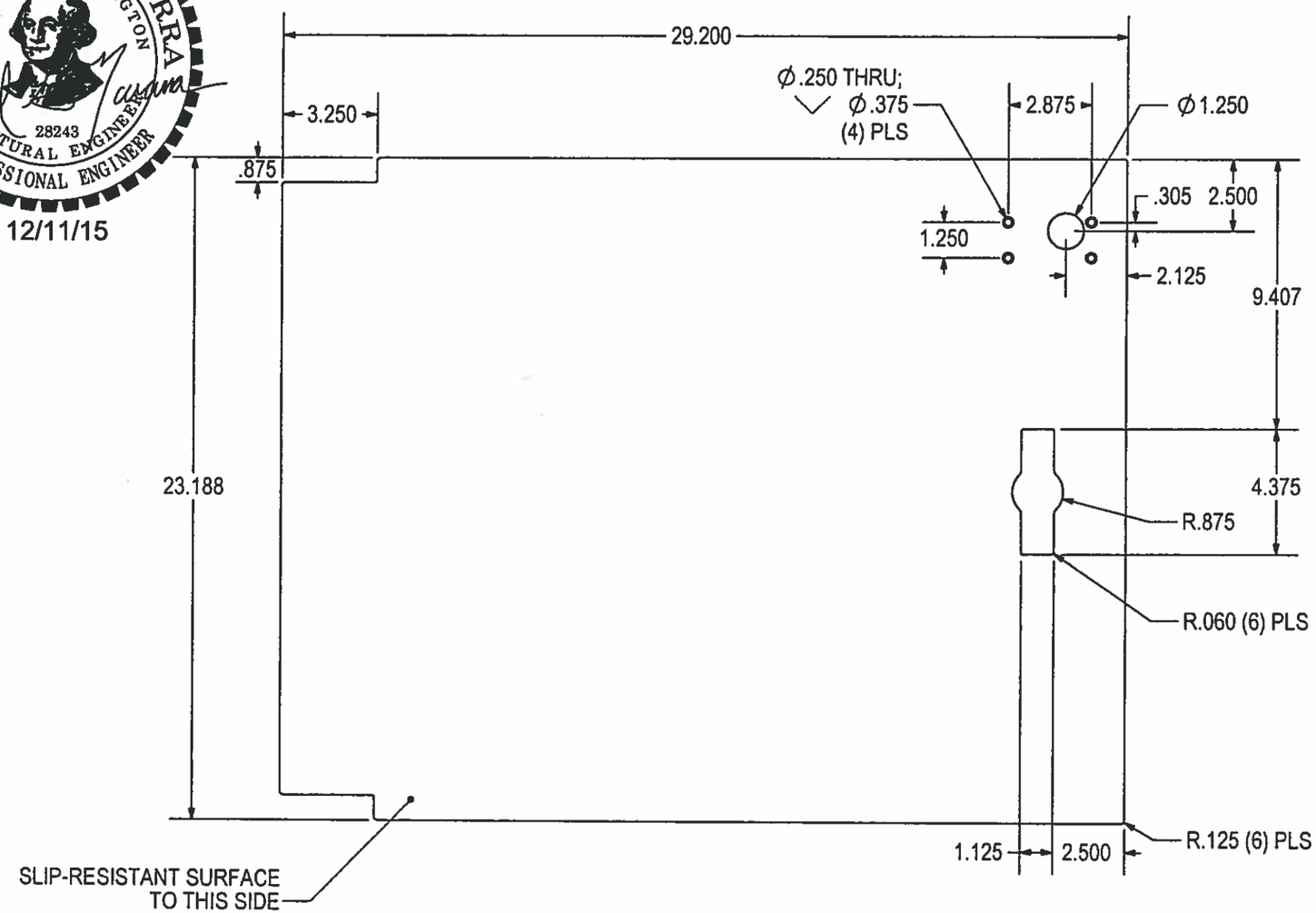

UNIVERSAL DWG:
716-S0021DP (DIAMOND PLATE)
716-S0021SN (SLIPNOT PLATE)

APPROVED
Washington State
Department of Transportation
HQ Traffic Operations Office
DATE Dec 15, 2015 TAT

3/16 DIAMOND -OR- 3/16 SLIPNOT PLATE
29.200 x 23.188
(1) REQ'D

THIS DRAWING CREATED FOR MANUFACTURING REFERENCE ONLY AND IS NOT INTENDED TO SUPERCEDE H² PRECAST INC. DRAWINGS OR SPECIFICATIONS OF THE REFERENCED PART.

Prepared for H² PRECAST INC.			25 TA WSDOT
LID, WITH LATCH			
HOLES ± 0.003 X.XXX ± 0.015 ANGLES ± 1.0°	SIZE A	DRAWN BY: DREW KEIM	PROGRAM NUMBER: DATE CREATED: 2/8/13	REV. B
	SCALE :NONE	CAD FILE: 716-S0021B	SHEET 1 of 1

THE INFORMATION CONTAINED IN THIS DRAWING IS THE SOLE PROPERTY OF H² PRECAST INC. ANY REPRODUCTION IN PART OR WHOLE WITHOUT THE WRITTEN PERMISSION OF FM&M IS PROHIBITED.

This assembly is constructed and tested to conform with WSDOT Standard Specification 9-29.2(2), Standard Duty Junction Boxes.

REV	DESCRIPTION	DATE	INITIALS
A	NOW UNIVERSAL PART / DRAWING; DIAMOND PLATE & SLIPNOT PLATE. 716-S0022XX WAS 716-S0022.	12/1/15	DK

GERARD G. NAVARRA
STATE OF WASHINGTON
28243
STRUCTURAL ENGINEER
PROFESSIONAL ENGINEER
12/11/15

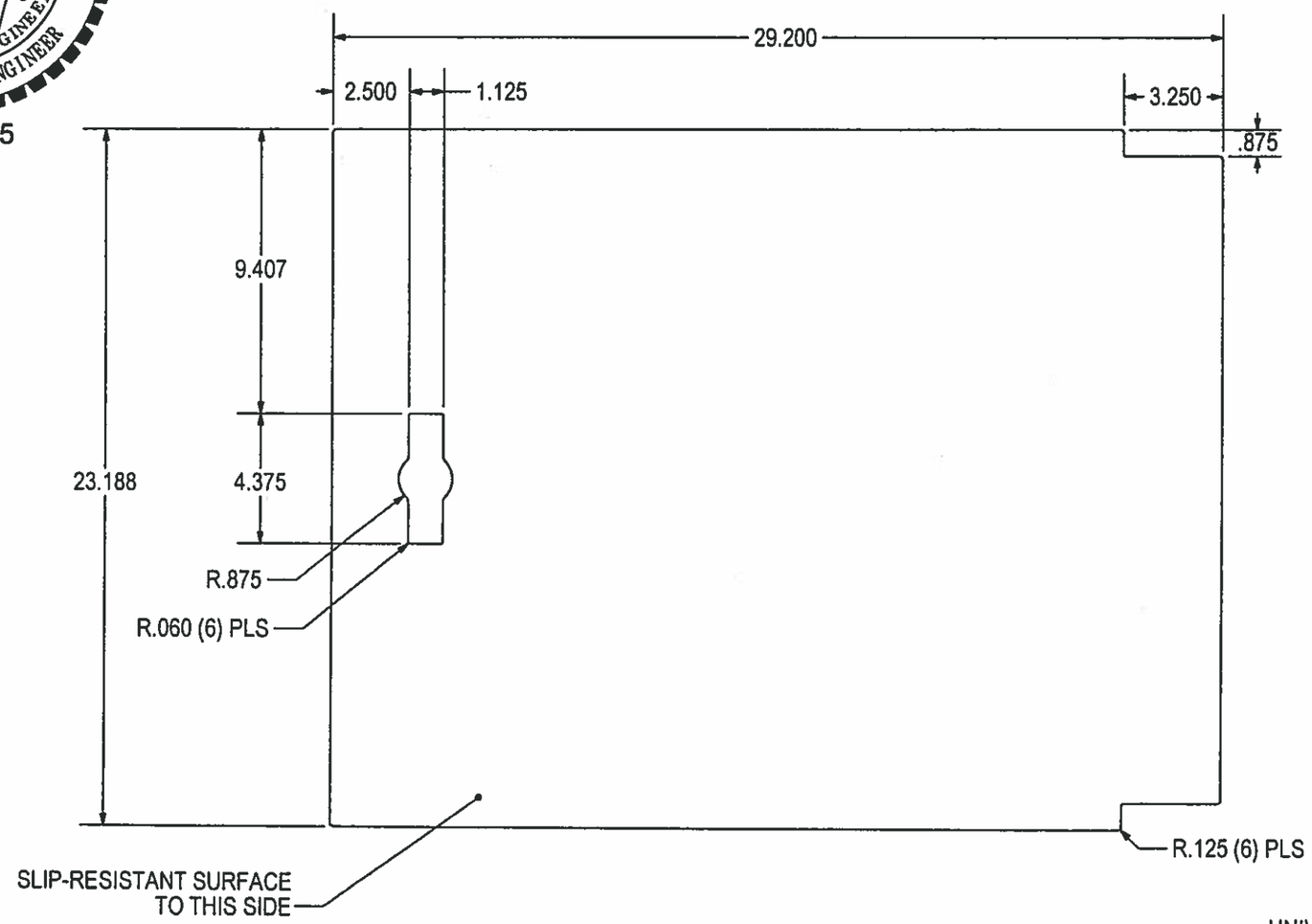

UNIVERSAL DWG:
716-S0022DP (DIAMOND PLATE)
716-S0022SN (SLIPNOT PLATE)

APPROVED
Washington State
Department of Transportation
HQ Traffic Operations Office
DATE Dec 15, 2015 TAT

3/16 DIAMOND -OR- 3/16 SLIPNOT PLATE
29.200 x 23.188
(1) REQ'D

THIS DRAWING CREATED FOR MANUFACTURING REFERENCE ONLY AND IS NOT INTENDED TO SUPERCEDE H² PRECAST INC. DRAWINGS OR SPECIFICATIONS OF THE REFERENCED PART.

Prepared for H² PRECAST INC. 25 TA WSDOT

LID

HOLES ± 0.003	SIZE A	DRAWN BY: DREW KEIM	PROGRAM NUMBER: DATE CREATED: 2/8/13	REV. A
X.XXX ± 0.015				
ANGLES ± 1.0°	SCALE: NONE	CAD FILE: 716-S0022A	SHEET 1 of 1	

THE INFORMATION CONTAINED IN THIS DRAWING IS THE SOLE PROPERTY OF H² PRECAST INC. ANY REPRODUCTION IN PART OR WHOLE WITHOUT THE WRITTEN PERMISSION OF FM&M IS PROHIBITED.

REV	DESCRIPTION	DATE	INITIALS
A	ADDED "TREAD" NOTE PER STATE REQUIREMENT	12/1/15	DK

This assembly is constructed and tested to conform with WSDOT Standard Specification 9-29.2(2), Standard Duty Junction Boxes.

GERARD G. NAVARRA
STATE OF WASHINGTON
28243
STRUCTURAL ENGINEER
PROFESSIONAL ENGINEER
12/11/15

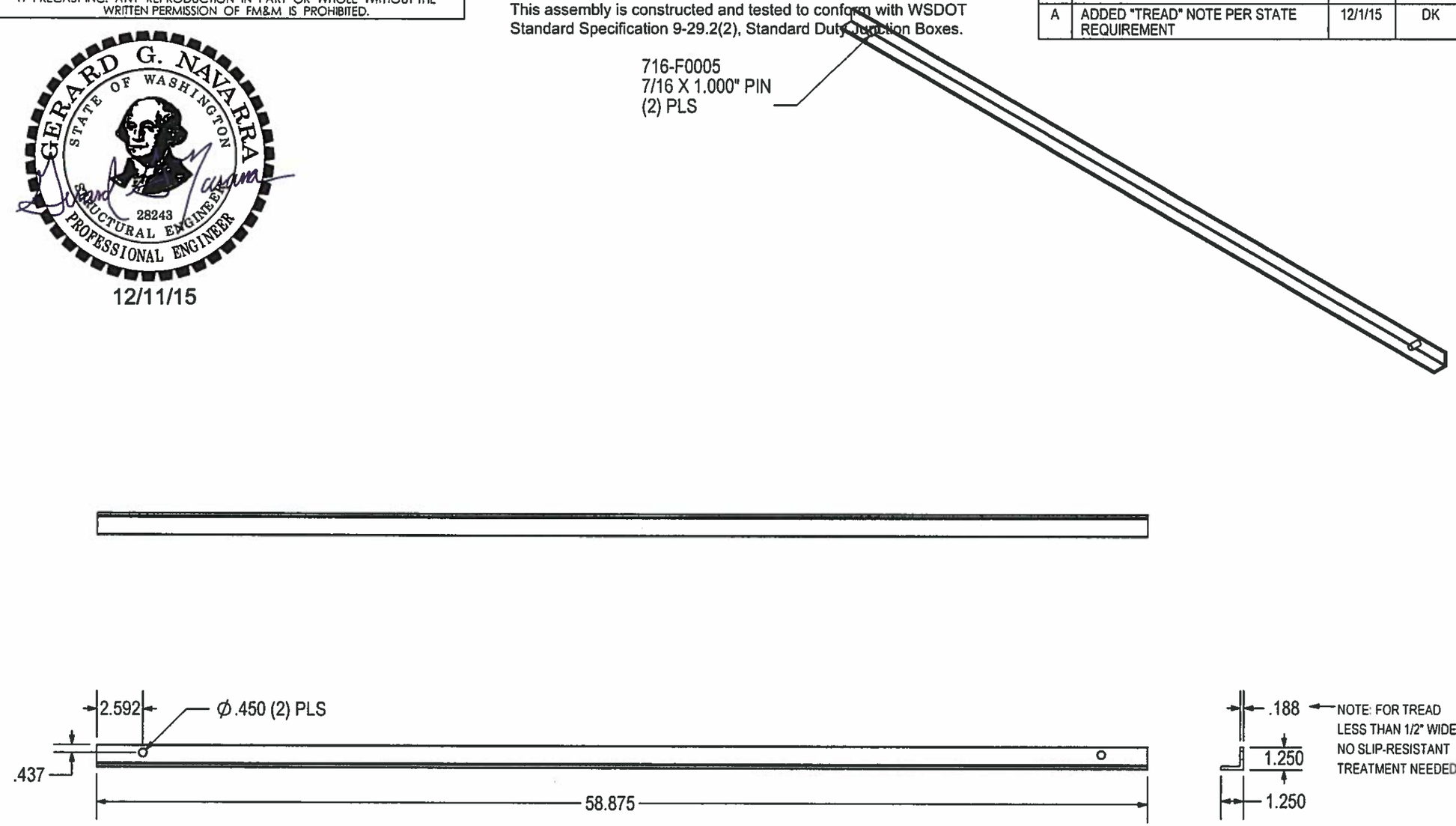

APPROVED
Washington State
Department of Transportation
HQ Traffic Operations Office
DATE Dec 15, 2015 TAT

1-1/4 X 1-1/4 X 3/16 ANGLE - 58.875 LONG
(2) PLS

25 TA WSDOT

Prepared for H² PRECAST INC.

FRAME, FRONT / REAR

THIS DRAWING CREATED FOR MANUFACTURING REFERENCE ONLY AND IS NOT INTENDED TO SUPERCEDE H² PRECAST INC. DRAWINGS OR SPECIFICATIONS OF THE REFERENCED PART.

HOLES ± 0.003
X.XXX ± 0.060
ANGLES ± 1.0°

SIZE	DRAWN BY:	PROGRAM NUMBER:	716-F0029	REV.
A	DREW KEIM	DATE CREATED: 2/8/13		A
SCALE: NONE	CAD FILE: 716-F0029 A		SHEET 1 of 1	

THE INFORMATION CONTAINED IN THIS DRAWING IS THE SOLE PROPERTY OF H² PRECAST INC. ANY REPRODUCTION IN PART OR WHOLE WITHOUT THE WRITTEN PERMISSION OF FM&M IS PROHIBITED.

This assembly is constructed and tested to conform with WSDOT Standard Specification 9-29.2(2), Standard Duty Junction Boxes.

REV	DESCRIPTION	DATE	INITIALS
A	ADDED "TREAD" NOTE PER STATE REQUIREMENT	12/1/15	DK

GERARD G. NAVARRA
STATE OF WASHINGTON
28243
STRUCTURAL ENGINEER
PROFESSIONAL ENGINEER
12/11/15

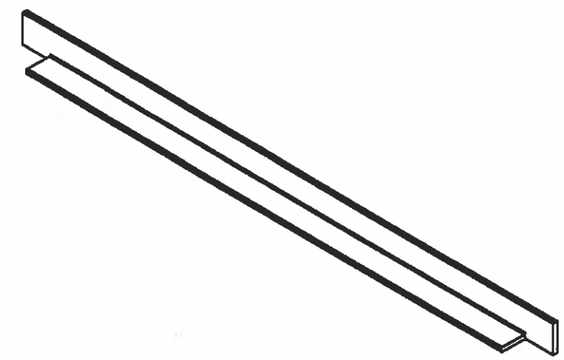

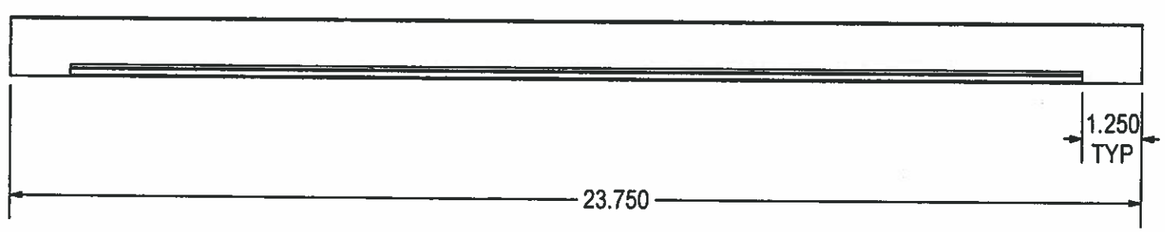

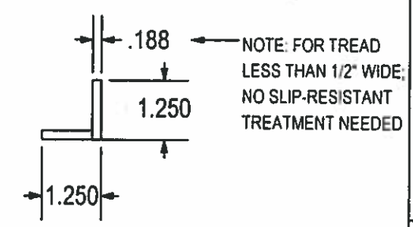

NOTE: FOR TREAD LESS THAN 1/2" WIDE; NO SLIP-RESISTANT TREATMENT NEEDED

APPROVED
Washington State
Department of Transportation
HQ Traffic Operations Office
DATE Dec 15, 2015 TAT

1-1/4 X 1-1/4 X 3/16 ANGLE - 23.750 LONG
(2) PLS

25 TA WSDOT

Prepared for H² PRECAST INC.

FRAME, SIDES

THIS DRAWING CREATED FOR MANUFACTURING REFERENCE ONLY AND IS NOT INTENDED TO SUPERCEDE H² PRECAST INC. DRAWINGS OR SPECIFICATIONS OF THE REFERENCED PART.

HOLES ± 0.003
X.XXX ± 0.060
ANGLES ± 1.0°

SIZE A | DRAWN BY: DREW KEIM | PROGRAM NUMBER: 716-F0028 | DATE CREATED: 2/8/13 | REV. A

SCALE :NONE | CAD FILE: 716-F0028A | SHEET 1 of 1

THE INFORMATION CONTAINED IN THIS DRAWING IS THE SOLE PROPERTY OF H² PRECAST INC. ANY REPRODUCTION IN PART OR WHOLE WITHOUT THE WRITTEN PERMISSION OF FM&M IS PROHIBITED.

This assembly is constructed and tested to conform with WSDOT Standard Specification 9-29.2(2), Standard Duty Junction Boxes.

GERARD CUNAVARRA
STATE OF WASHINGTON
28243
STRUCTURAL ENGINEER
PROFESSIONAL ENGINEER

12/11/15

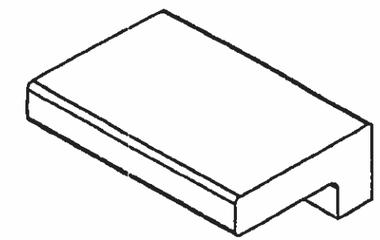

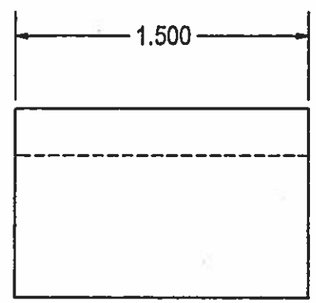

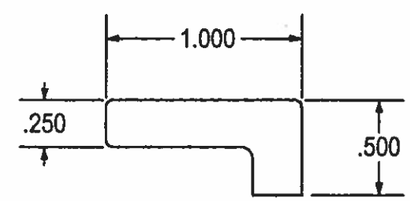

APPROVED
Washington State
Department of Transportation
HQ Traffic Operations Office
DATE Dec 15, 2015 TAT

1 X 1 X 1/4 ANGLE X 1.500 LONG

25 TA WSDOT

Prepared for H² PRECAST INC.

LATCH TAB

THIS DRAWING CREATED FOR MANUFACTURING REFERENCE ONLY AND IS NOT INTENDED TO SUPERCEDE H² PRECAST INC. DRAWINGS OR SPECIFICATIONS OF THE REFERENCED PART.

HOLES ± 0.003
X.XXX ± 0.060
ANGLES ± 1.0°

SIZE	DRAWN BY:	PROGRAM NUMBER:	REV.
A	OREW KEIM	DATE CREATED: 2/8/13	716-F0030
SCALE :NONE	CAD FILE: 716-F0030	SHEET 1 of 1	

THE INFORMATION CONTAINED IN THIS DRAWING IS THE SOLE PROPERTY OF H² PRECAST INC. ANY REPRODUCTION IN PART OR WHOLE WITHOUT THE WRITTEN PERMISSION OF FM&M IS PROHIBITED.

This assembly is constructed and tested to conform with WSDOT Standard Specification 9-29.2(2), Standard Duty Junction Boxes.

GERARD NAVARRA
STATE OF WASHINGTON
28243
STRUCTURAL ENGINEER
PROFESSIONAL ENGINEER
12/11/15

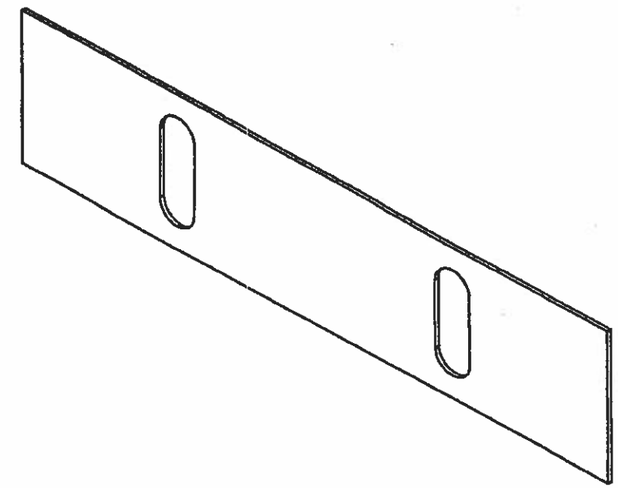

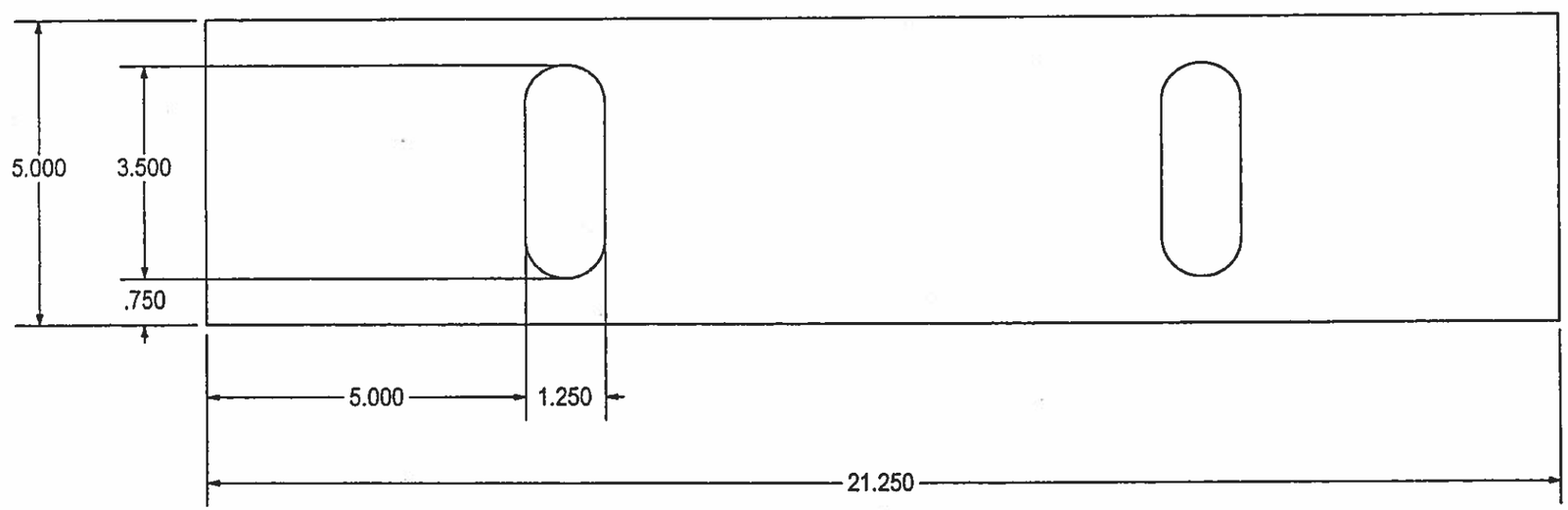

APPROVED
Washington State
Department of Transportation
HQ Traffic Operations Office
DATE Dec 15, 2015 TAT

10 GA HR - 21.250 X 5.000
(2) REQ'D

THIS DRAWING CREATED FOR MANUFACTURING REFERENCE ONLY AND IS NOT INTENDED TO SUPERCEDE H² PRECAST INC. DRAWINGS OR SPECIFICATIONS OF THE REFERENCED PART.

HOLES ± 0.003
X.XXX ± 0.015
ANGLES ± 1.0°

Prepared for H² PRECAST INC.

FRAME ANCHOR, SIDE

SIZE	DRAWN BY:	PROGRAM NUMBER:	716-S0025	REV.
A	DREW KEIM	DATE CREATED: 2/8/13		
SCALE: NONE	CAD FILE: 716-S0025		SHEET 1 of 1	

THE INFORMATION CONTAINED IN THIS DRAWING IS THE SOLE PROPERTY OF H³ PRECAST INC. ANY REPRODUCTION IN PART OR WHOLE WITHOUT THE WRITTEN PERMISSION OF FM&M IS PROHIBITED.

This assembly is constructed and tested to conform with WSDOT Standard Specification 9-29.2(2), Standard Duty Junction Boxes.

GERARD C. NAVARRA
STATE OF WASHINGTON
28243
STRUCTURAL ENGINEER
PROFESSIONAL ENGINEER
12/11/15

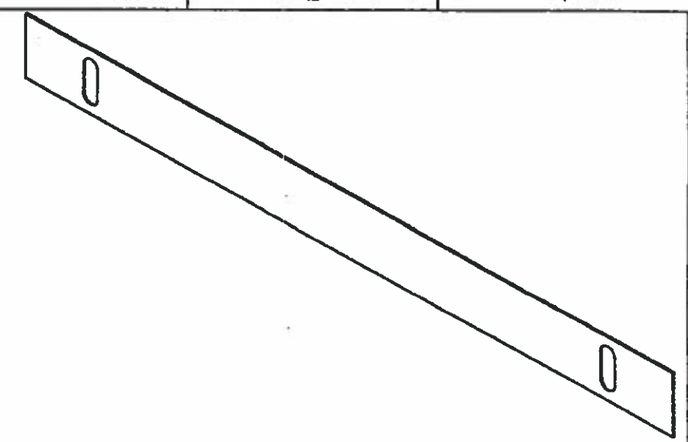

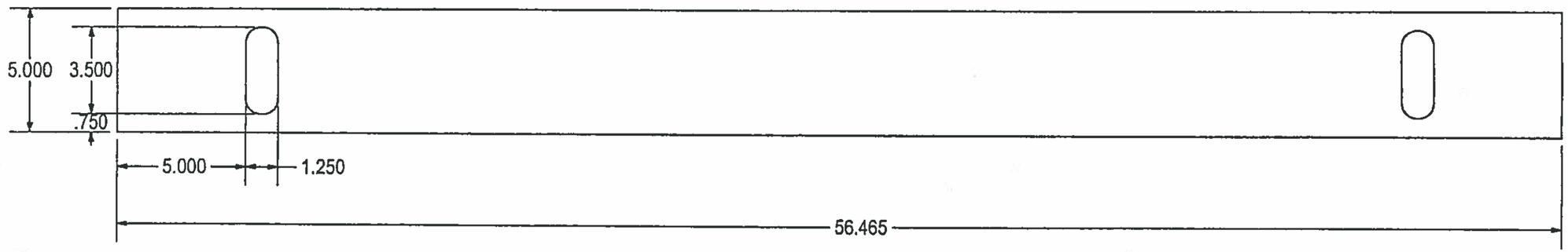

APPROVED
Washington State
Department of Transportation
HQ Traffic Operations Office
DATE Dec. 15, 2015 TAT

10 GA HR - 56.465 X 5.000
(2) REQ'D

THIS DRAWING CREATED FOR MANUFACTURING REFERENCE ONLY AND IS NOT INTENDED TO SUPERCEDE H³ PRECAST INC. DRAWINGS OR SPECIFICATIONS OF THE REFERENCED PART.

HOLES ± 0.003
X.XXX ± 0.015
ANGLES ± 1.0°

Prepared for H³ PRECAST INC.

FRAME ANCHOR, FRONT / REAR

SIZE	DRAWN BY:	PROGRAM NUMBER:		REV.
A	DREW KEIM	DATE CREATED: 2/8/13	716-S0026	
SCALE :NONE	CAD FILE: 716-S0026		SHEET 1 of 1	

THE INFORMATION CONTAINED IN THIS DRAWING IS THE SOLE PROPERTY OF H² PRECAST INC. ANY REPRODUCTION IN PART OR WHOLE WITHOUT THE WRITTEN PERMISSION OF FM&M IS PROHIBITED.

This assembly is constructed and tested to conform with WSDOT Standard Specification 9-29.2(2), Standard Duty Junction Boxes.

GERARD G. NAVARRA
STATE OF WASHINGTON
28243
STRUCTURAL ENGINEER
PROFESSIONAL ENGINEER

12/11/15

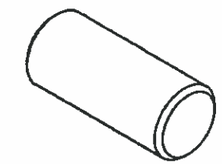

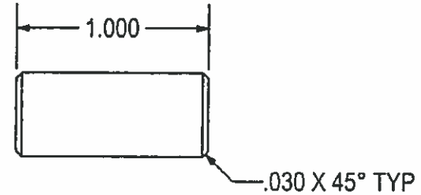

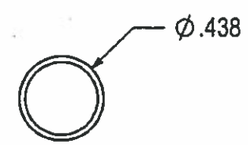

UNIVERSAL PART,
USED ON:

2436 GPUD	(2) PLS
2436 SDOT (SLIP)	(2) PLS
2436 WSDOT (STL)	(2) PLS
25TA WSDOT	(4) PLS
3030 STD STL	(2) PLS

APPROVED
Washington State
Department of Transportation
HQ Traffic Operations Office
DATE Dec. 15, 2015 TAT

7/16" CFRB - 1.000" LONG

THIS DRAWING CREATED FOR MANUFACTURING REFERENCE ONLY AND IS NOT INTENDED TO SUPERCEDE H² PRECAST INC. DRAWINGS OR SPECIFICATIONS OF THE REFERENCED PART.

Prepared for H² PRECAST INC.

FRAME PIN

SIZE	DRAWN BY:	PROGRAM NUMBER:	REV.
A	DREW KEIM	100-11143	
		DATE CREATED: 12/7/2012	
SCALE :NONE	CAD FILE: 100-11143	SHEET 1 of 1	

THE INFORMATION CONTAINED IN THIS DRAWING IS THE SOLE PROPERTY OF H³ PRECAST INC. ANY REPRODUCTION IN PART OR WHOLE WITHOUT THE WRITTEN PERMISSION OF FM&M IS PROHIBITED.

This assembly is constructed and tested to conform with WSDOT Standard Specification 9-29.2(2), Standard Duty Junction Boxes.

GERARD G. NAVARRA
STATE OF WASHINGTON
28243
STRUCTURAL ENGINEER
PROFESSIONAL ENGINEER

12/11/15

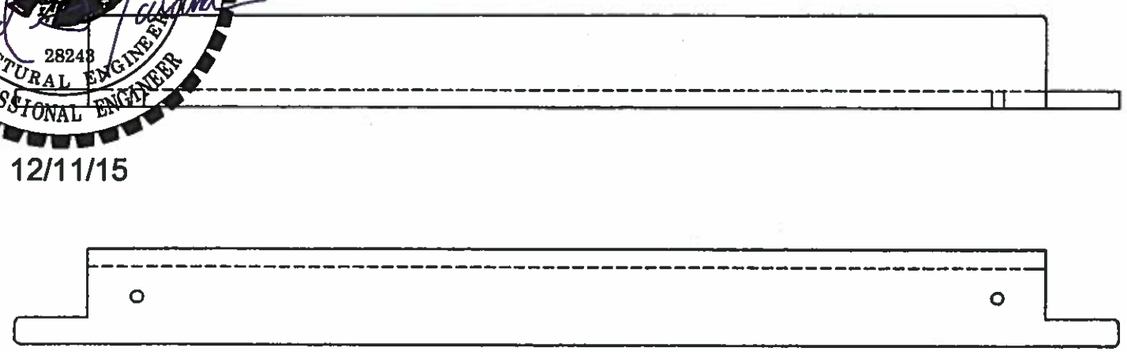

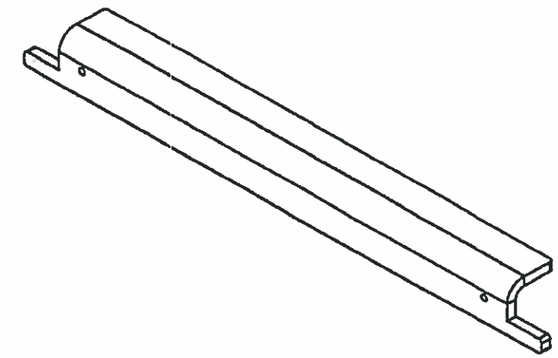

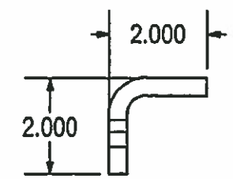

FORMED DETAILS

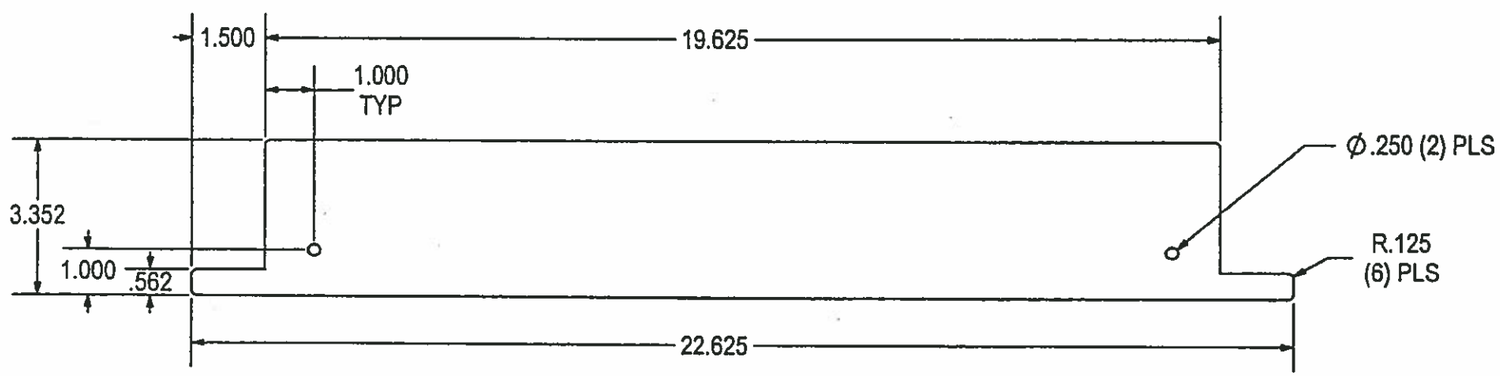

FLAT PATTERN

APPROVED
Washington State
Department of Transportation
HQ Traffic Operations Office
DATE Dec 15, 2015 TAT

3/8 HR - 22.625 X 3.352
X = .648 @ 90° .375 R
(8) PLS

THIS DRAWING CREATED FOR MANUFACTURING REFERENCE ONLY AND IS NOT INTENDED TO SUPERCEDE H³ PRECAST INC. DRAWINGS OR SPECIFICATIONS OF THE REFERENCED PART.

HOLES ± 0.003
X.XXX ± 0.015
ANGLES ± 1.0°

25 TA WSDOT

Prepared for H³ PRECAST INC.

LID SUPPORT, CENTER

SIZE	DRAWN BY:	PROGRAM NUMBER:	REV.
A	DREW KEIM	DATE CREATED: 2/8/13 716-S0023	
SCALE :NONE	CAD FILE: 716-S0023	SHEET 1 of 1	

THE INFORMATION CONTAINED IN THIS DRAWING IS THE SOLE PROPERTY OF H³ PRECAST INC. ANY REPRODUCTION IN PART OR WHOLE WITHOUT THE WRITTEN PERMISSION OF FM&M IS PROHIBITED.

This assembly is constructed and tested to conform with WSDOT Standard Specification 9-29.2(2), Standard Duty Junction Boxes.

REV	DESCRIPTION	DATE	INITIALS
A	REMOVED NOTCHES FROM FLAT PATTERN.	5/14/13	DK

GERARD G. NAVARRA
STATE OF WASHINGTON
28243
STRUCTURAL ENGINEER
PROFESSIONAL ENGINEER
12/11/15

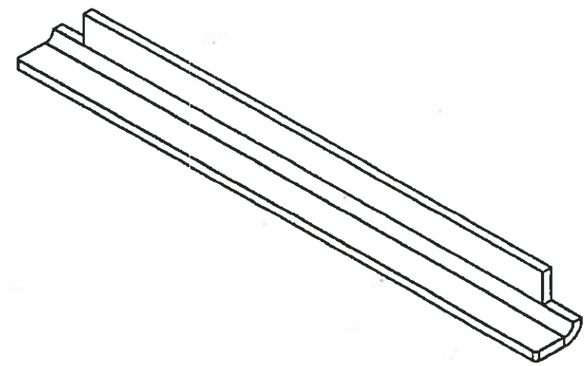

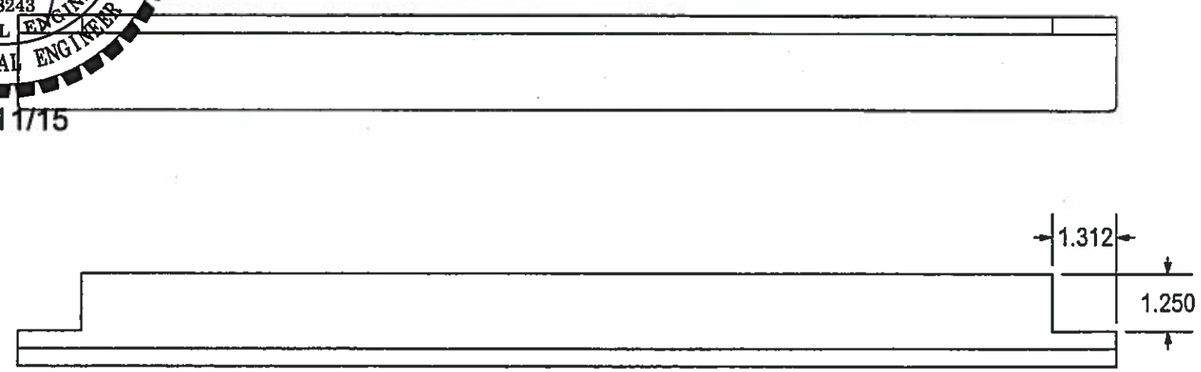

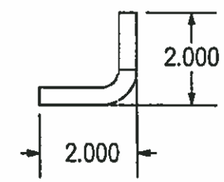

FORMED DETAILS

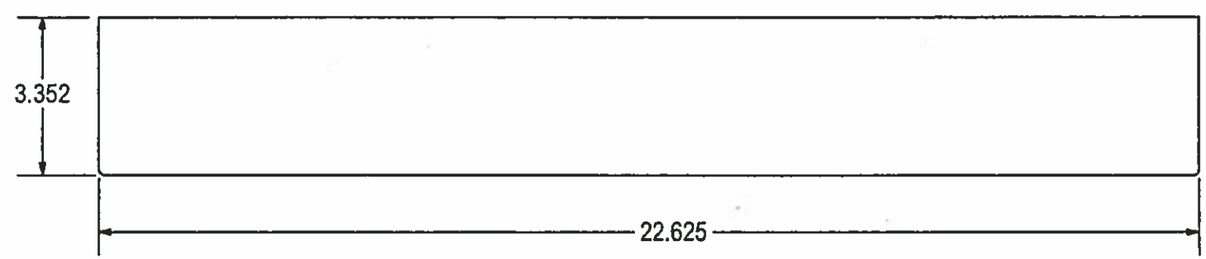

FLAT PATTERN

APPROVED
Washington State
Department of Transportation
HQ Traffic Operations Office
DATE Dec 15, 2015 TAT

3/8 HR - 22.625 X 3.352
X = .648 @ 90° .375 R
(1) PLS

25 TA WSDOT

Prepared for H³ PRECAST INC.

CENTER CATCH, LID

THIS DRAWING CREATED FOR MANUFACTURING REFERENCE ONLY AND IS NOT INTENDED TO SUPERCEDE H³ PRECAST INC. DRAWINGS OR SPECIFICATIONS OF THE REFERENCED PART.

HOLES ± 0.003
X.XXX ± 0.060
ANGLES ± 1.0°

SIZE	DRAWN BY:	PROGRAM NUMBER:	716-S0024	REV.
A	DREW KEIM	DATE CREATED: 2/8/13		A
SCALE :NONE	CAD FILE: 716-S0024A		SHEET 1 of 1	

THE INFORMATION CONTAINED IN THIS DRAWING IS THE SOLE PROPERTY OF H² PRECAST INC. ANY REPRODUCTION IN PART OR WHOLE WITHOUT THE WRITTEN PERMISSION OF FM&M IS PROHIBITED.

This assembly is constructed and tested to conform with WSDOT Standard Specification 9-29.2(2), Standard Duty Junction Boxes.

GERARD C. NAVARRA
STATE OF WASHINGTON
28243
STRUCTURAL ENGINEER
PROFESSIONAL ENGINEER
12/11/15

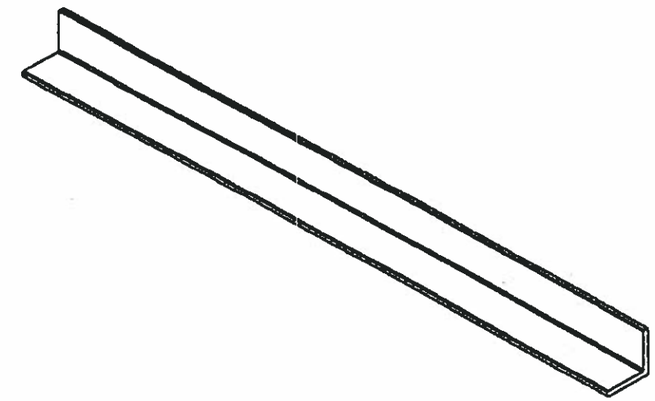

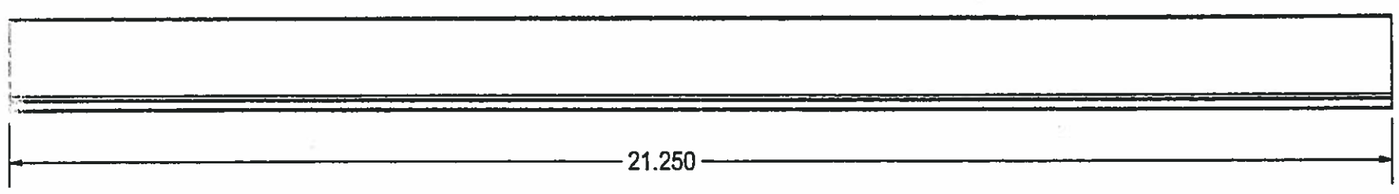

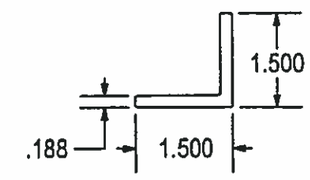

APPROVED
Washington State
Department of Transportation
HQ Traffic Operations Office
DATE Dec 15, 2015 TAT

1-1/2 X 1-1/2 X 3/16 ANGLE - 21.250 LONG
(2) REQ'D

25 TA WSDOT

THIS DRAWING CREATED FOR MANUFACTURING REFERENCE ONLY AND IS NOT INTENDED TO SUPERCEDE H² PRECAST INC. DRAWINGS OR SPECIFICATIONS OF THE REFERENCED PART.

Prepared for H² PRECAST INC.				
LID SUPPORT, SHORT				
HOLES ± 0.003 X.XXX ± 0.060 ANGLES ± 1.0°	SIZE A	DRAWN BY: DREW KEIM	PROGRAM NUMBER: 716-F0025 DATE CREATED: 2/8/13	REV.
	SCALE :NONE	CAD FILE: 716-F0025	SHEET 1 of 1	

THE INFORMATION CONTAINED IN THIS DRAWING IS THE SOLE PROPERTY OF H² PRECAST INC. ANY REPRODUCTION IN PART OR WHOLE WITHOUT THE WRITTEN PERMISSION OF FM&M IS PROHIBITED.

This assembly is constructed and tested to conform with WSDOT Standard Specification 9-29.2(2), Standard Duty Junction Boxes

GERARD NAVARRA
STATE OF WASHINGTON
28243
STRUCTURAL ENGINEER
PROFESSIONAL ENGINEER
12/11/15

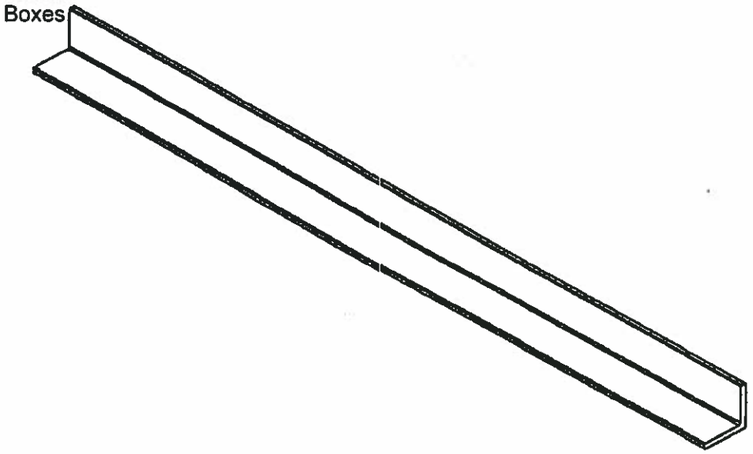

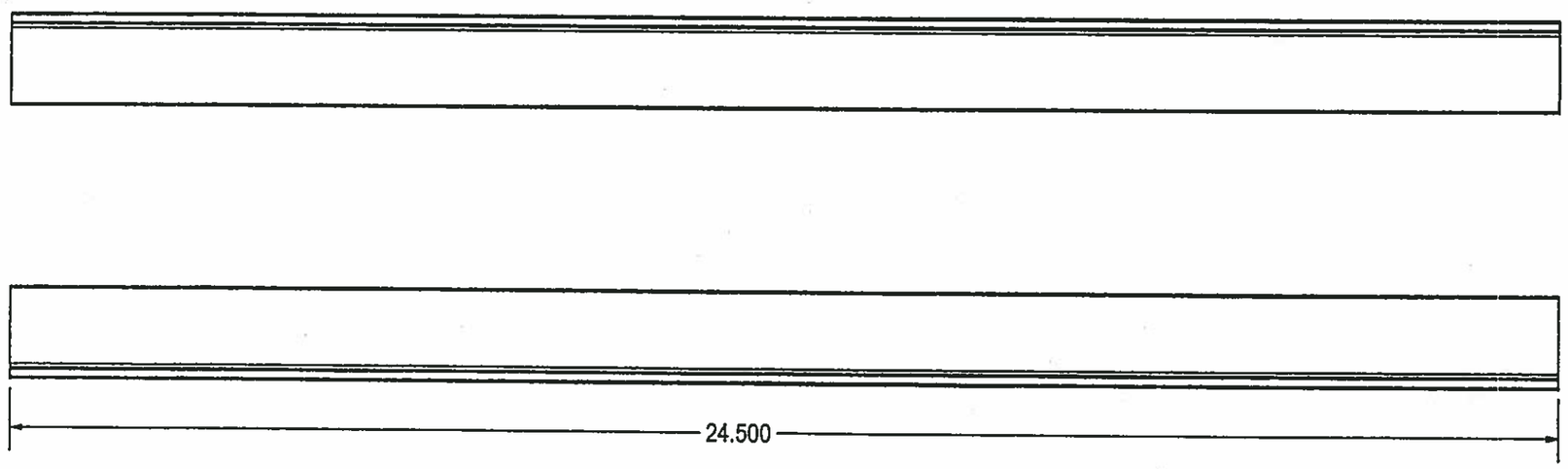

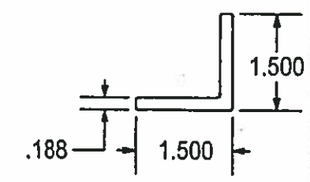

APPROVED
Washington State
Department of Transportation
HQ Traffic Operations Office
DATE Dec 15, 2015 TAT

1-1/2 X 1-1/2 X 3/16 ANGLE - 24.500 LONG
(2) REQ'D

THIS DRAWING CREATED FOR MANUFACTURING REFERENCE ONLY AND IS NOT INTENDED TO SUPERCEDE H² PRECAST INC. DRAWINGS OR SPECIFICATIONS OF THE REFERENCED PART.

HOLES ± 0.003
X.XXX ± 0.060
ANGLES ± 1.0°

25 TA WSDOT

Prepared for H² PRECAST INC.

LID SUPPORT, LONG

SIZE	DRAWN BY:	PROGRAM NUMBER:	716-F0027	REV.
A	DREW KEIM	DATE CREATED: 2/8/13		
SCALE :NONE	CAD FILE: 716-F0027		SHEET 1 of 1	

THE INFORMATION CONTAINED IN THIS DRAWING IS THE SOLE PROPERTY OF H³ PRECAST INC. ANY REPRODUCTION IN PART OR WHOLE WITHOUT THE WRITTEN PERMISSION OF FM&M IS PROHIBITED.

This assembly is constructed and tested to conform with WSDOT Standard Specification 9-29.2(2), Standard Duty Junction Boxes.

GERARD C. NAVARRA
STATE OF WASHINGTON
28243
STRUCTURAL ENGINEER
PROFESSIONAL ENGINEER

12/11/15

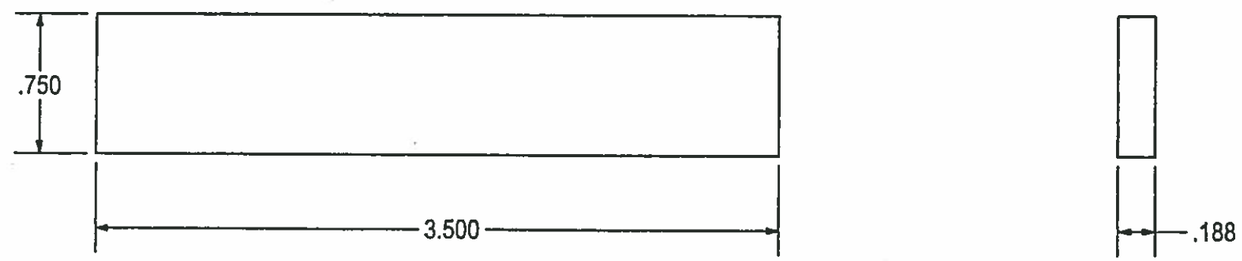

APPROVED
Washington State
Department of Transportation
HQ Traffic Operations Office
DATE Dec 15, 2015 TAT

3/16 X 3/4 HRFB - 3.500 LONG
(1) PLS

25 TA WSDOT

THIS DRAWING CREATED FOR MANUFACTURING REFERENCE ONLY AND IS NOT INTENDED TO SUPERCEDE H³ PRECAST INC. DRAWINGS OR SPECIFICATIONS OF THE REFERENCED PART.

HOLES ± 0.003 X.XXX ± 0.060 ANGLES ± 1.0°	SIZE A	DRAWN BY: DREW KEIM	PROGRAM NUMBER: 716-F0026 DATE CREATED: 2/8/13	REV.
	SCALE :NONE	CAD FILE: 716-F0026	SHEET 1 of 1	

Prepared for H³ PRECAST INC.

RIB, CENTER

THE INFORMATION CONTAINED IN THIS DRAWING IS THE SOLE PROPERTY OF H² PRECAST INC. ANY REPRODUCTION IN PART OR WHOLE WITHOUT THE WRITTEN PERMISSION OF FM&M IS PROHIBITED.

This assembly is constructed and tested to conform with WSDOT Standard Specification 9-29.2(2), Standard Duty Junction Boxes.

GERARD NAVARRA
STATE OF WASHINGTON
28243
STRUCTURAL ENGINEER
PROFESSIONAL ENGINEER
12/11/15

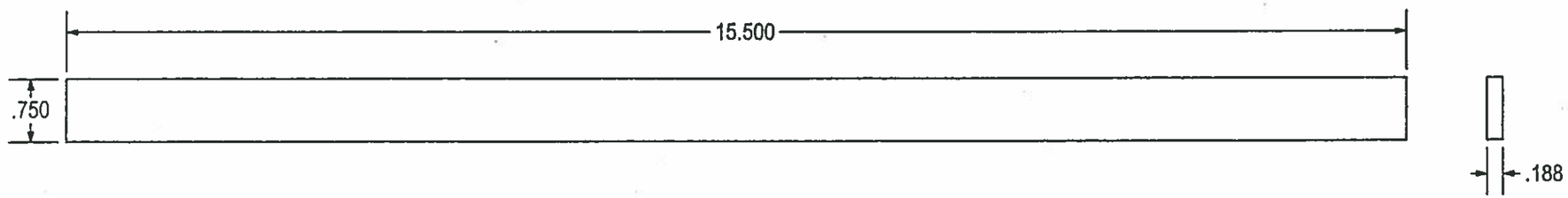

APPROVED
Washington State
Department of Transportation
HQ Traffic Operations Office
DATE Dec 15, 2015 TAT

3/16 X 3/4 HRFB - 15.500 LONG
(2) PLS

25 TA WSDOT

THIS DRAWING CREATED FOR MANUFACTURING REFERENCE ONLY AND IS NOT INTENDED TO SUPERCEDE H² PRECAST INC. DRAWINGS OR SPECIFICATIONS OF THE REFERENCED PART.

HOLES ± 0.003
X.XXX ± 0.060
ANGLES ± 1.0°

Prepared for H² PRECAST INC.

RIB, SIDE

SIZE	DRAWN BY:	PROGRAM NUMBER:	REV.
A	DREW KEIM	DATE CREATED: 2/8/13	
SCALE :NONE	CAD FILE: 716-F0024	SHEET 1 of 1	

716-F0024

THE INFORMATION CONTAINED IN THIS DRAWING IS THE SOLE PROPERTY OF H² PRECAST INC. ANY REPRODUCTION IN PART OR WHOLE WITHOUT THE WRITTEN PERMISSION OF FM&M IS PROHIBITED.

This assembly is constructed and tested to conform with WSDOT Standard Specification 9-29.2(2), Standard Duty Junction Boxes.

GERARD C. NAVARRA
STATE OF WASHINGTON
28243
STRUCTURAL ENGINEER
PROFESSIONAL ENGINEER

12/11/15

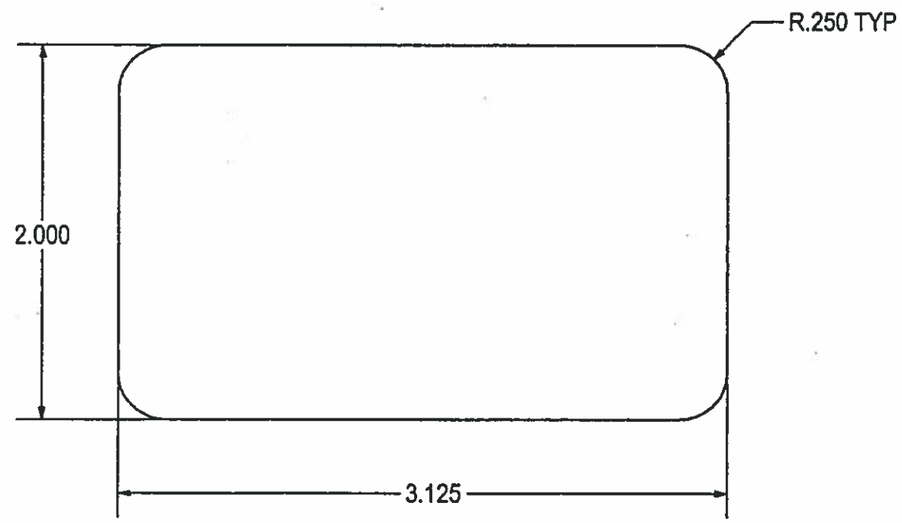

UNIVERSAL PART
USED ON:
25 TA WSDOT
3030 STD STL

APPROVED
Washington State
Department of Transportation
HQ Traffic Operations Office
DATE Dec 15, 2015 TAT

1/4 HR - 3.125 X 2.000
(1) REQ'D

THIS DRAWING CREATED FOR MANUFACTURING REFERENCE ONLY AND IS NOT INTENDED TO SUPERCEDE H² PRECAST INC. DRAWINGS OR SPECIFICATIONS OF THE REFERENCED PART.

Prepared for H² PRECAST INC.

HANDLE STOP

SIZE	DRAWN BY:	PROGRAM NUMBER: 716-S0014	REV.
A	CREW KEIM	DATE CREATED: 12/11/12	
SCALE :NONE	CAD FILE: 716-S0014	SHEET 1 of 1	

THE INFORMATION CONTAINED IN THIS DRAWING IS THE SOLE PROPERTY OF H² PRECAST INC. ANY REPRODUCTION IN PART OR WHOLE WITHOUT THE WRITTEN PERMISSION OF FM&M IS PROHIBITED.

This assembly is constructed and tested to conform with WSDOT Standard Specification 9-29.2(2), Standard Duty Junction Boxes.

REV	DESCRIPTION	DATE	INITIALS
NP	NEW FAB PART. WAS S/M 716-S0013.	2/14/13	DK

GERARD NAVARRA
STATE OF WASHINGTON
28243
STRUCTURAL ENGINEER
PROFESSIONAL ENGINEER
12/11/15

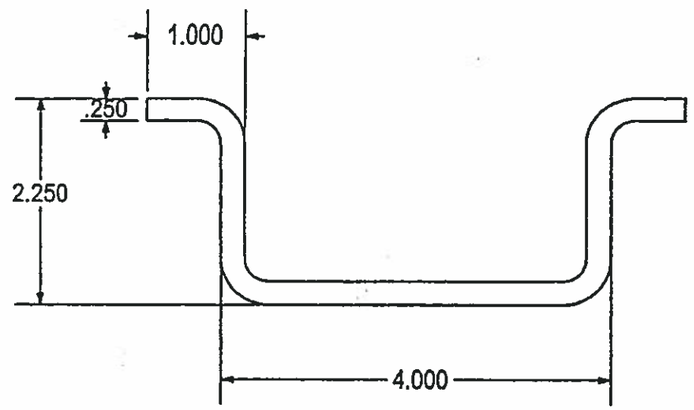

FORMED DETAILS

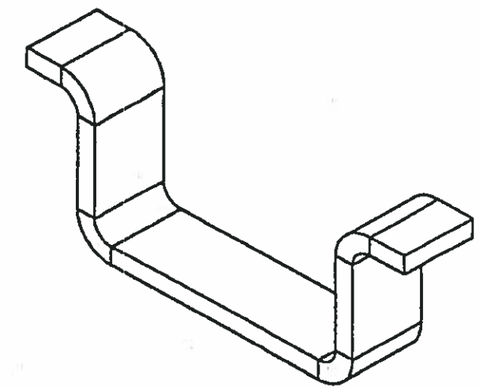

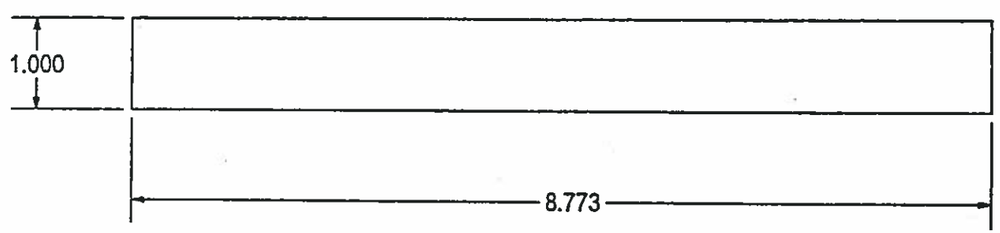

FLAT PATTERN

UNIVERSAL PART,
USED ON:
2436 SDOT (SLIP)
25 TA WSDOT
3030 STD STL

APPROVED
Washington State
Department of Transportation
HQ Traffic Operations Office
DATE Dec 15, 2015 TAT

1/4 X 1.000 HRFB X 8.773
X = .432 @ 90° .250 R
(1) REQ'D

THIS DRAWING CREATED FOR MANUFACTURING REFERENCE ONLY AND IS NOT INTENDED TO SUPERCEDE H² PRECAST INC. DRAWINGS OR SPECIFICATIONS OF THE REFERENCED PART.

HOLES ± 0.003
X.XXX ± 0.060
ANGLES ± 1.0°

Prepared for H² PRECAST INC.

HANDLE

SIZE	DRAWN BY:	PROGRAM NUMBER:	716-F0031	REV.
A	DREW KEIM	DATE CREATED: 12/10/12		NP
SCALE :NONE	CAD FILE: 716-F0031		SHEET 1 of 1	

THE INFORMATION CONTAINED IN THIS DRAWING IS THE SOLE PROPERTY OF H³ PRECAST INC. ANY REPRODUCTION IN PART OR WHOLE WITHOUT THE WRITTEN PERMISSION OF FM&M IS PROHIBITED.

This assembly is constructed and tested to conform with WSDOT Standard Specification 9-29.2(2), Standard Duty Junction Boxes.

REV	DESCRIPTION	DATE	INITIALS
B	3/16 X 3/4 HRFB WAS 3/16 X 1 X 1 ANGLE.	4/23/13	DK

GERARD C. NAVARRA
STATE OF WASHINGTON
28243
STRUCTURAL ENGINEER
PROFESSIONAL ENGINEER
12/11/15

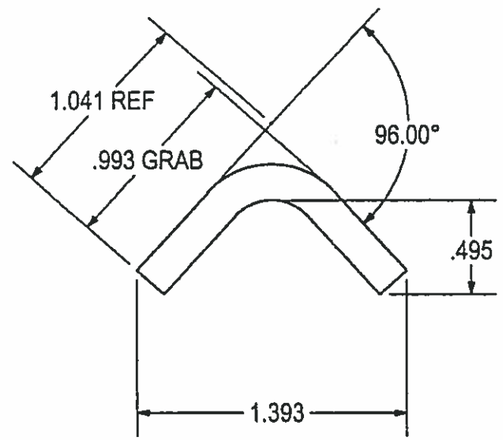

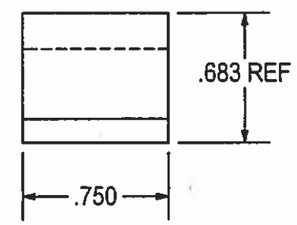

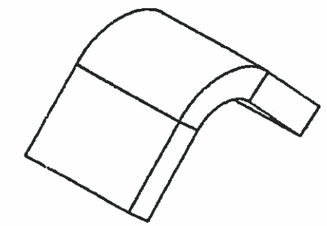

FORM DETAIL

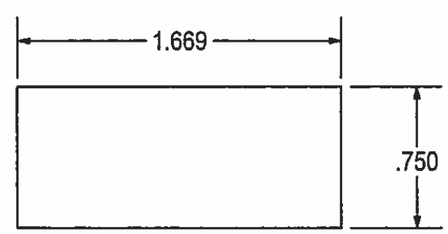

FLAT PATTERN

UNIVERSAL PART, USED ON:	# REQ'D
2436 SDOT (SLIP)	4
2436 STD (STL)	4
2436 WSDOT (STL)	4
25 TA WSDOT	8
3030 STD STL	4

APPROVED
Washington State
Department of Transportation
HQ Traffic Operations Office
DATE Dec 15, 2015 TAT

3/16 X 3/4 HRFB - 1.669 LONG
X = .413 @ 96.32° .250 R

THIS DRAWING CREATED FOR MANUFACTURING REFERENCE ONLY AND IS NOT INTENDED TO SUPERCEDE H³ PRECAST INC. DRAWINGS OR SPECIFICATIONS OF THE REFERENCED PART.

HOLES ± 0.003
X.XXX ± 0.015
ANGLES ± 1.0°

Prepared for H³ PRECAST INC.

RETAINER, HINGE PIN

SIZE	DRAWN BY:	PROGRAM NUMBER:	REV.
A	DREW KEIM	716-F0004	B
		DATE CREATED: 12/8/2012	

SCALE :NONE | CAD FILE: 716-F0004B | SHEET 1 of 1

THE INFORMATION CONTAINED IN THIS DRAWING IS THE SOLE PROPERTY OF H² PRECAST INC. ANY REPRODUCTION IN PART OR WHOLE WITHOUT THE WRITTEN PERMISSION OF FM&M IS PROHIBITED.

This assembly is constructed and tested to conform with WSDOT Standard Specification 9-29.2(2), Standard Duty Junction Boxes.

GERARD G. NAVARRA
STATE OF WASHINGTON
28243
STRUCTURAL ENGINEER
PROFESSIONAL ENGINEER

12/11/15

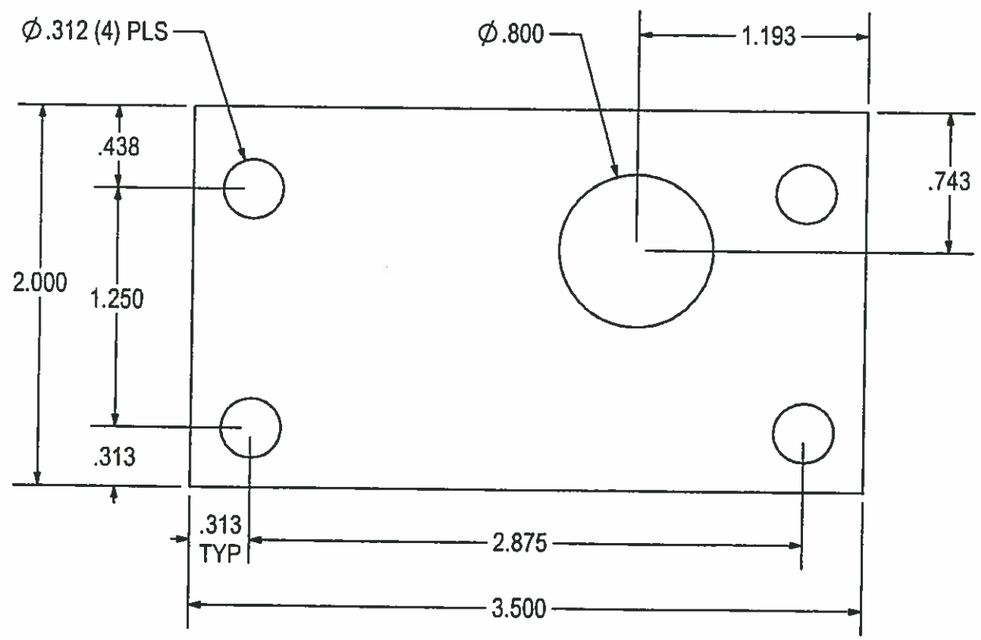

UNIVERSAL PART,
USED ON:

2436 GPUD	(1) PLS
2436 SDOT (SLIP)	(1) PLS
2436 WSDOT (STL)	(1) PLS
25TA WSDOT	(1) PLS
3030 STD STL	(1) PLS
3636 STD ALU	(1) PLS
VD13-P-GPUD	(1) PLS

APPROVED
Washington State
Department of Transportation
HQ Traffic Operations Office
DATE Dec 15, 2015 TAT

1/8" THK RUBBER GSKT - 3.500 X 2.000

THIS DRAWING CREATED FOR MANUFACTURING REFERENCE ONLY AND IS NOT INTENDED TO SUPERCEDE H² PRECAST INC. DRAWINGS OR SPECIFICATIONS OF THE REFERENCED PART.

HOLES ± 0.003	Prepared for H² PRECAST INC.			
X.X ± 0.060	LID LATCH GASKET			
X.XX ± 0.030	SIZE A	DRAWN BY: DREW KEIM	PROGRAM NUMBER: 100-03383 DATE CREATED: 8/13/12	REV.
X.XXX ± 0.015				
ANGLES ± 1.0°	SCALE :NONE	CAD FILE: 100-03383		SHEET 1 of 1

THE INFORMATION CONTAINED IN THIS DRAWING IS THE SOLE PROPERTY OF H² PRECAST INC. ANY REPRODUCTION IN PART OR WHOLE WITHOUT THE WRITTEN PERMISSION OF FM&M IS PROHIBITED.

This assembly is constructed and tested to conform with WSDOT Standard Specification 9-29.2(2), Standard Duty Junction Boxes.

GERARD G. NAVARRA
STATE OF WASHINGTON
28243
STRUCTURAL ENGINEER
PROFESSIONAL ENGINEER
12/11/15

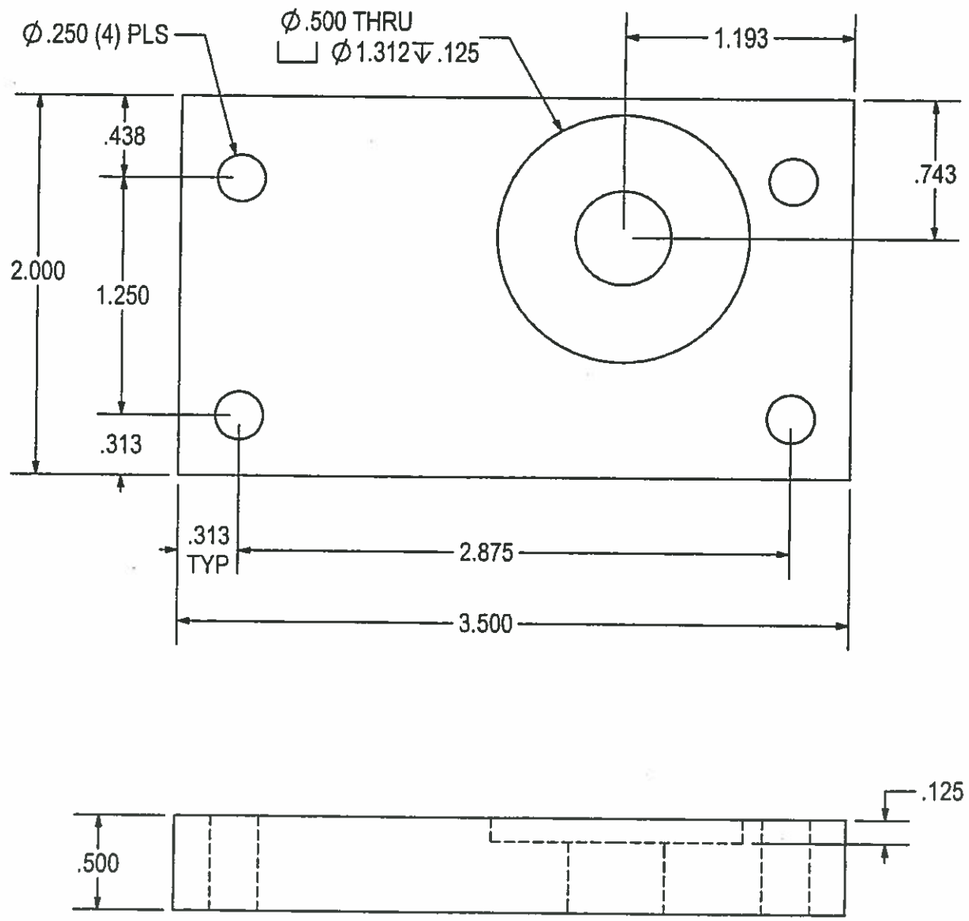

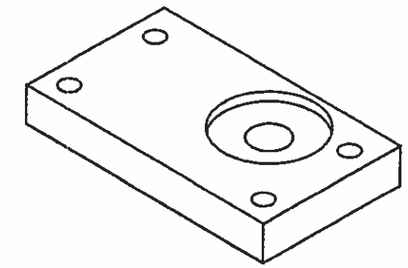

UNIVERSAL PART,
USED ON:

2436 GPUD	(2) PLS
2436 SDOT (SLIP)	(2) PLS
2436 WSDOT (STL)	(2) PLS
25TA WSDOT	(1) PLS
3030 STD STL	(2) PLS
3636 STD ALU	(1) PLS
VD13-P-GPUD	(1) PLS

APPROVED
Washington State
Department of Transportation
HQ Traffic Operations Office
DATE Dec 15, 2015 TAT

1/2" NYLON - 3.500 X 2.000

THIS DRAWING CREATED FOR MANUFACTURING REFERENCE ONLY AND IS NOT INTENDED TO SUPERCEDE H² PRECAST INC. DRAWINGS OR SPECIFICATIONS OF THE REFERENCED PART.

HOLES ± 0.003	Prepared for H² PRECAST INC.
X.X ± 0.060	LID LATCH SPACER
X.XX ± 0.030	SIZE A · DRAWN BY: DREW KEIM · PROGRAM NUMBER: 100-11136 · DATE CREATED: 8/13/12 · REV.
X.XXX ± 0.015	
ANGLES ± 1.0°	SCALE: NONE · CAD FILE: 100-11136 · SHEET 1 of 1

THE INFORMATION CONTAINED IN THIS DRAWING IS THE SOLE PROPERTY OF H² PRECAST INC. ANY REPRODUCTION IN PART OR WHOLE WITHOUT THE WRITTEN PERMISSION OF FM&M IS PROHIBITED.

This assembly is constructed and tested to conform with WSDOT Standard Specification 9-29.2(2), Standard Duty Junction Boxes.

REV	DESCRIPTION	DATE	INITIALS
A	Ø.480 HOLES (2 PLS) WERE Ø.165. INCREASE TO ACCOMMODATE GALVANIZING.	4/12/13	DK

GERARD G. NAVARRA
STATE OF WASHINGTON
28243
STRUCTURAL ENGINEER
PROFESSIONAL ENGINEER
12/11/15

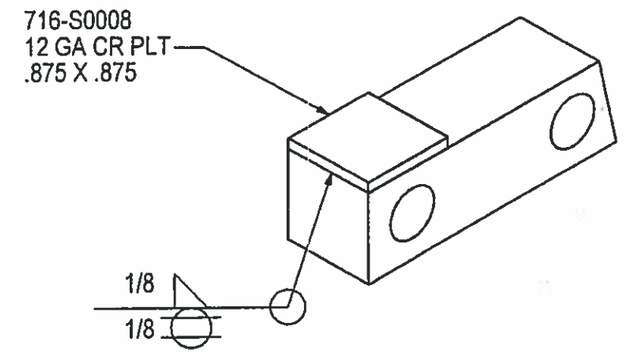

WELD DETAIL - 700-00019

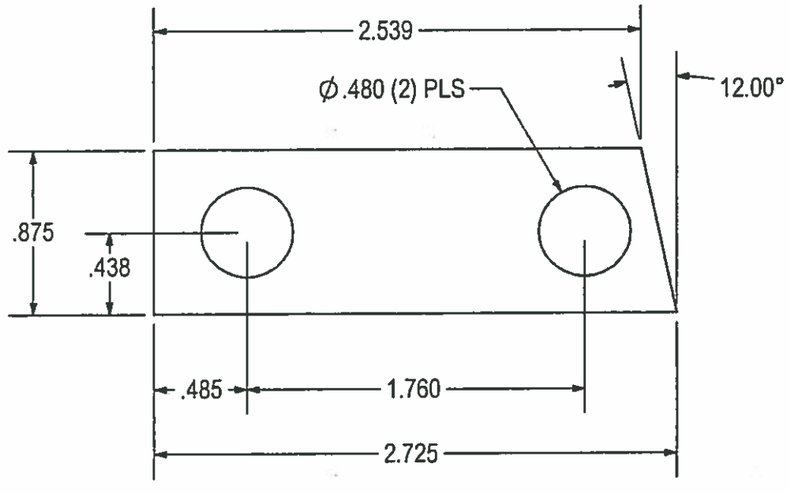

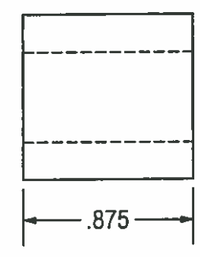


```
UNIVERSAL PART,
USED ON:
2436 GPUD          (2) PLS
2436 SDOT (SLIP)   (2) PLS
2436 WSDOT (STL)   (2) PLS
25TA WSDOT         (4) PLS
3030 STD STL       (2) PLS
```

APPROVED
Washington State
Department of Transportation
HQ Traffic Operations Office
DATE Dec 15, 2015 TAT

7/8" SQR BAR STOCK - 2.725 LONG

THIS DRAWING CREATED FOR MANUFACTURING REFERENCE ONLY AND IS NOT INTENDED TO SUPERCEDE H² PRECAST INC. DRAWINGS OR SPECIFICATIONS OF THE REFERENCED PART.

HINGE BLOCK WELD ASSEMBLY: 700-00019

Prepared for H² PRECAST INC.

HINGE BLOCK

SIZE	DRAWN BY:	PROGRAM NUMBER:	100-11141	REV.
A	DREW KEIM	DATE CREATED: 12/7/2012		A
SCALE :NONE	CAD FILE: 100-11141A		SHEET 1 of 1	

THE INFORMATION CONTAINED IN THIS DRAWING IS THE SOLE PROPERTY OF H² PRECAST INC. ANY REPRODUCTION IN PART OR WHOLE WITHOUT THE WRITTEN PERMISSION OF FM&M IS PROHIBITED.

This assembly is constructed and tested to conform with WSDOT Standard Specification 9-29.2(2), Standard Duty Junction Boxes.

REV	DESCRIPTION	DATE	INITIALS
A	Ø.130 HOLE WAS Ø.125	4/12/13	DK

GERARD G. NAVARRA
STATE OF WASHINGTON
28243
STRUCTURAL ENGINEER
PROFESSIONAL ENGINEER
12/11/15

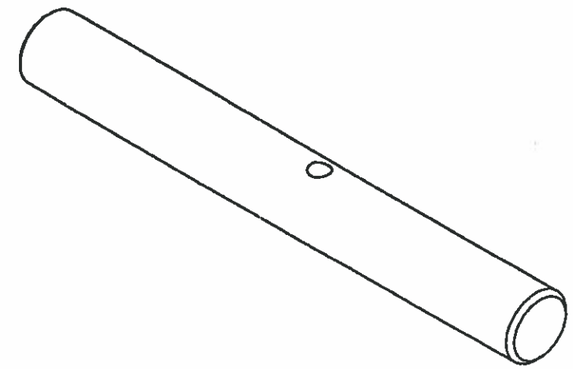

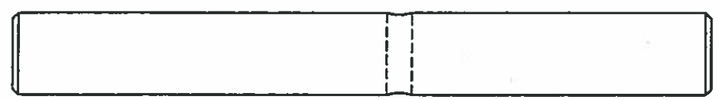

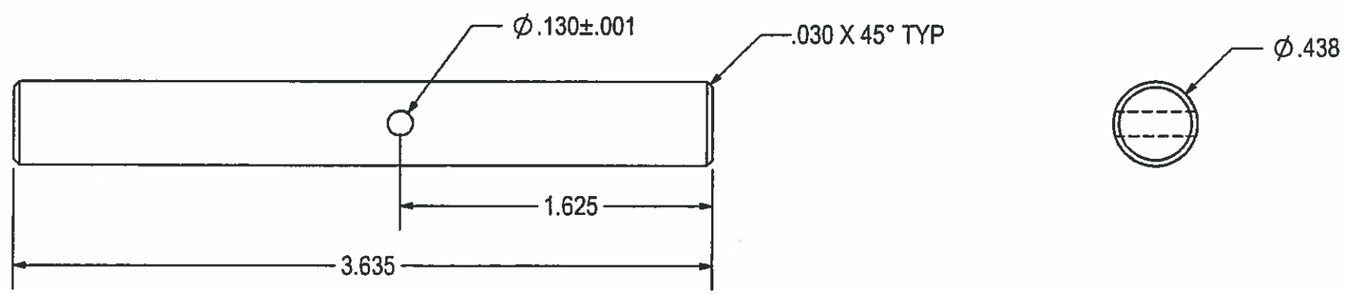

UNIVERSAL PART,
USED ON:

2436 GPUD	(2)	PLS
2436 SDOT (SLIP)	(2)	PLS
2436 WSDOT (STL)	(2)	PLS
25TA WSDOT	(4)	PLS
3030 STD STL	(2)	PLS

APPROVED
Washington State
Department of Transportation
HQ Traffic Operations Office
DATE Dec 15, 2015 TAT

7/16" 18-8 SS - 3.635" LONG

THIS DRAWING CREATED FOR MANUFACTURING REFERENCE ONLY AND IS NOT INTENDED TO SUPERCEDE H² PRECAST INC. DRAWINGS OR SPECIFICATIONS OF THE REFERENCED PART.

Prepared for H² PRECAST INC.

HINGE PIN

SIZE	DRAWN BY:	PROGRAM NUMBER:	REV.
A	DREW KEIM	100-11142	A
		DATE CREATED: 12/7/2012	
SCALE :NONE	CAD FILE: 100-11142A	SHEET 1 of 1	

THE INFORMATION CONTAINED IN THIS DRAWING IS THE SOLE PROPERTY OF H² PRECAST INC. ANY REPRODUCTION IN PART OR WHOLE WITHOUT THE WRITTEN PERMISSION OF FM&M IS PROHIBITED.

This assembly is constructed and tested to conform with WSDOT Standard Specification 9-29.2(2), Standard Duty Junction Boxes.

GERARD G. NAVARRA
STATE OF WASHINGTON
28243
STRUCTURAL ENGINEER
PROFESSIONAL ENGINEER

12/11/15

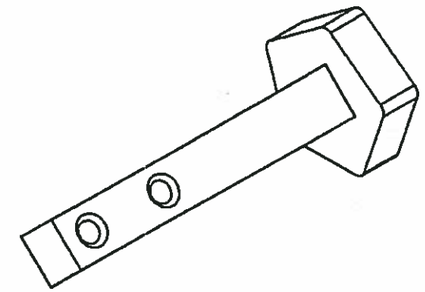

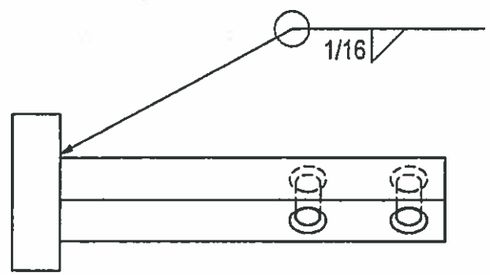

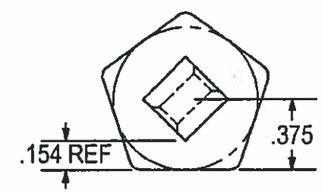

WELD DETAIL

UNIVERSAL PART,
USED ON:
2436 GPUD
2436 STND STL
2436 WSDOT (STL)
25 TA WSDOT
3030 STD STL
3636 STD ALUM
VD13-P-GPUD

#	SKU#	DESCRIPTION	QTY
2	716-S0001	PENTA HEAD	1
1	100-11146	PIN SHAFT, PENTA HEAD	1

PARTS LIST

APPROVED
Washington State
Department of Transportation
HQ Traffic Operations Office
DATE Dec 15, 2015 TAT

THIS DRAWING CREATED FOR MANUFACTURING REFERENCE ONLY AND IS NOT INTENDED TO SUPERCEDE H² PRECAST INC. DRAWINGS OR SPECIFICATIONS OF THE REFERENCED PART.

Prepared for H² PRECAST INC.

PENTA HEAD PIN - WELD ASSEMBLY

SIZE	DRAWN BY:	PROGRAM NUMBER:	REV.
A	DREW KEIM	700-00020	
		DATE CREATED: 1/15/13	

SCALE: NONE | CAD FILE: 716-F0022 | SHEET 1 of 1

THE INFORMATION CONTAINED IN THIS DRAWING IS THE SOLE PROPERTY OF H² PRECAST INC. ANY REPRODUCTION IN PART OR WHOLE WITHOUT THE WRITTEN PERMISSION OF FM&M IS PROHIBITED.

This assembly is constructed and tested to conform with WSDOT Standard Specification 9-29.2(2), Standard Duty Junction Boxes.

GERARD G. NAVARRA
STATE OF WASHINGTON
28243
STRUCTURAL ENGINEER
PROFESSIONAL ENGINEER
12/11/15

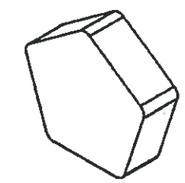

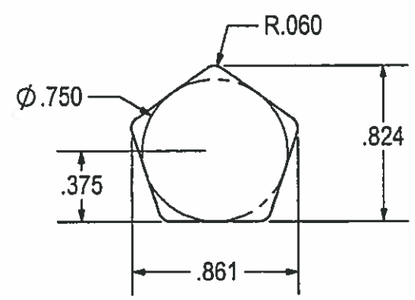

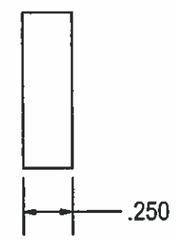

UNIVERSAL PART,
USED ON:
2436 GPUD
2436 STND STL
2436 SDOT (SLIP)
2436 WSDOT (STL)
25 TA WSDOT
3030 STD STL
3636 STD ALUM
OC SINGLE
VD13-P-GPUD

APPROVED
Washington State
Department of Transportation
HQ Traffic Operations Office
DATE Dec 15, 2015 TRT

1/4 304SS - .861 X .825
(1) REQ'D

THIS DRAWING CREATED FOR MANUFACTURING REFERENCE ONLY AND IS NOT INTENDED TO SUPERCEDE H² PRECAST INC. DRAWINGS OR SPECIFICATIONS OF THE REFERENCED PART.

Prepared for H² PRECAST INC.

PENTA HEAD

SIZE	DRAWN BY:	PROGRAM NUMBER: 716-S0001	REV.
A	DREW KEIM	DATE CREATED: 1/15/13	
SCALE :NONE	CAD FILE: 716-S0001	SHEET 1 of 1	

THE INFORMATION CONTAINED IN THIS DRAWING IS THE SOLE PROPERTY OF H³ PRECAST INC. ANY REPRODUCTION IN PART OR WHOLE WITHOUT THE WRITTEN PERMISSION OF FM&M IS PROHIBITED.

This assembly is constructed and tested to conform with WSDOT Standard Specification 9-29.2(2), Standard Duty Junction Boxes.

REV	DESCRIPTION	DATE	INITIALS
B	Ø.130 HOLES WERE Ø.125.	4/11/13	DK

GERARD G. NAVARRA
STATE OF WASHINGTON
28243
STRUCTURAL ENGINEER
PROFESSIONAL ENGINEER

12/11/15

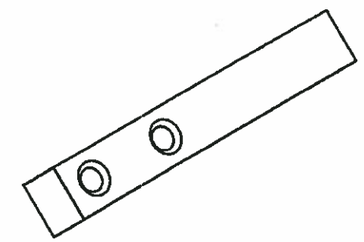

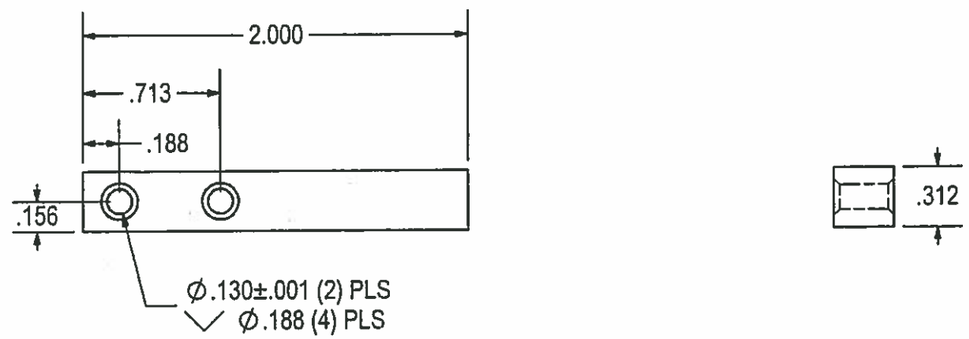

PART DETAIL

UNIVERSAL PART,
USED ON:
2436 GPUD
2436 STND STL
2436 WSDOT (STL)
25TA WSDOT
3030 STD STL
3636 STD ALUM
VD13-P-GPUD

APPROVED
Washington State
Department of Transportation
HQ Traffic Operations Office
DATE Dec 15, 2015 TAT

5/16 SQR BAR, 304SS - 2.000" LONG
(1) PLS

THIS DRAWING CREATED FOR MANUFACTURING REFERENCE ONLY AND IS NOT INTENDED TO SUPERCEDE H³ PRECAST INC. DRAWINGS OR SPECIFICATIONS OF THE REFERENCED PART.

USED IN PENTA HEAD PIN WELD ASSEMBLY #: 700-00020

Prepared for H³ PRECAST INC.

PIN SHAFT, PENTA HEAD PIN

SIZE	DRAWN BY:	PROGRAM NUMBER:	REV.
A	DREW KEIM	100-11146	B
		DATE CREATED: 1/15/13	
SCALE :NONE	CAD FILE: 100-11146	SHEET 1 of 1	

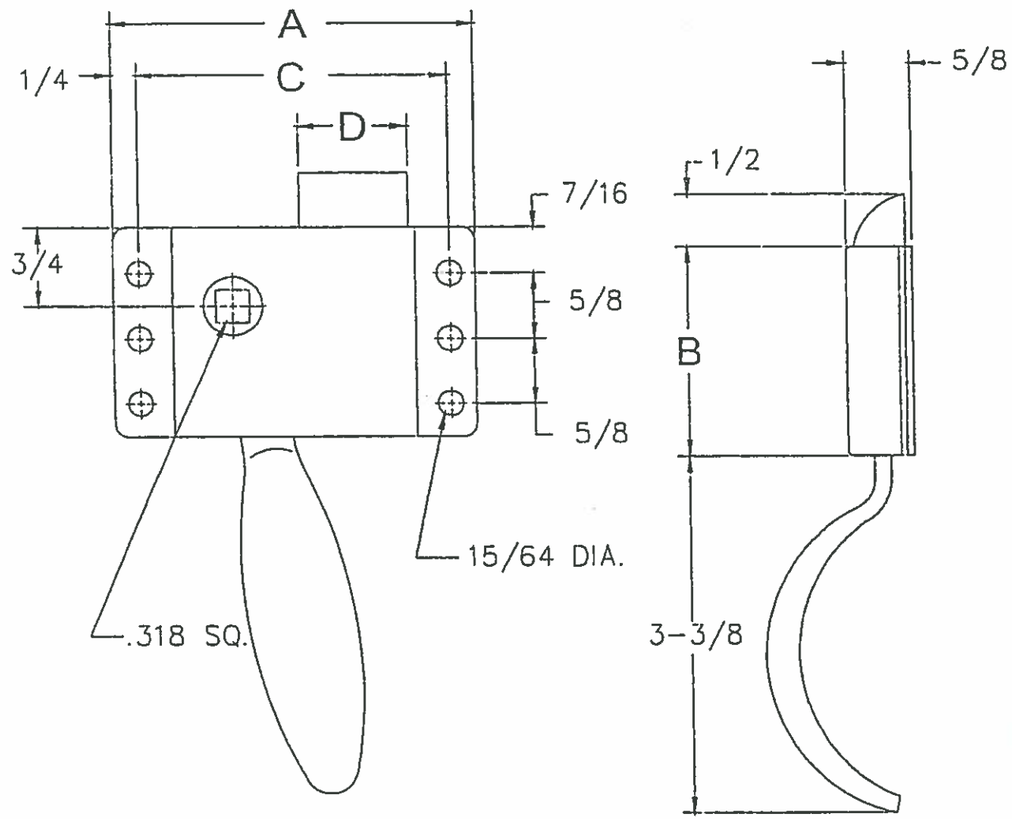

55 CAB LOCK

- Accepts 5/16" shank
- ✓ Available in stainless steel
- ✓ Available in steel construction/zinc finish
- ✓ Available with heavy duty case

100-02890
LATCH (SLAM), aka CAB LOCK(55)
A.L. HANSEN #F55XXXLSXXXX

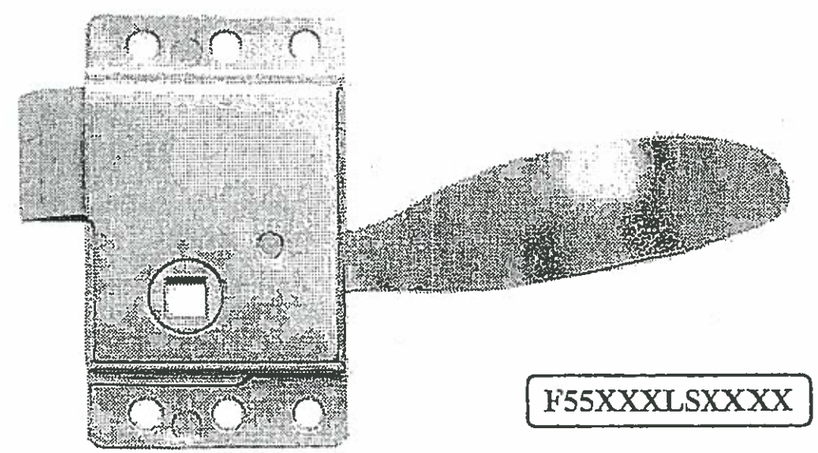

F55XXXLSXXXX

APPROVED
Washington State
Department of Transportation
HQ Traffic Operations Office
DATE Dec 15, 2015 TAT

Copy
8/8/12

	A	B	C	D
55	3 3/8	2	2 7/8	1
55A	4 11/32	2 3/8	3 5/8	1 1/2

All Dimensions are in inches

ISO 9001:2000 QUALITY SYSTEM
FM Approvals Quality System Registration

A. L. HANSEN MANUFACTURING

701 Pershing Rd. Waukegan, Illinois 60085 U.S.A. Phone: (847)244-8900 Fax: (847)244-7222 WWW.ALHANSEN.COM

CAN BE SEPERATE PCS.

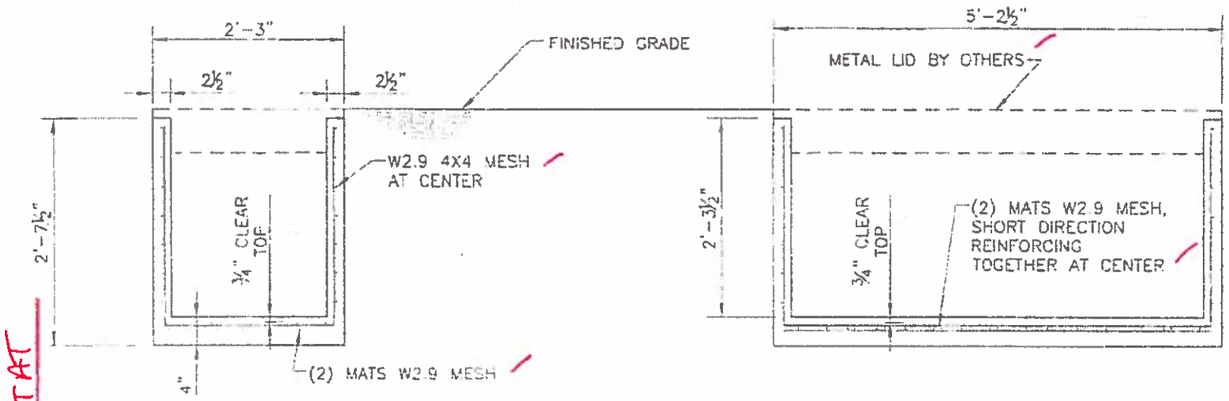

TRANV SECTION

LONGI. SECTION

GENERAL NOTES

1. F'c=4000 PSI MIN AT 28 DAYS
2. REINFORCING WIRE ASTM A185, GRADE 70
3. MINIMUM REINF COVER 0.75" UNO
4. 16,000 LB WHEEL LOAD CAPACITY
5. LATERAL DESIGN EARTH PRESSURE, 35 PCF
6. BACKFILL TO BE SAND OR GRAVEL
7. 3000 PSI MINIMUM STRENGTH BEFORE STRIPPING
8. NO SPLICE EXCEPT AT LOCATIONS SHOWN

APPROVED
Washington State
Department of Transportation
HQ Traffic Operations Office
DATE Dec 15, 2015
TAT

THIS DRAWING HAS BEEN PREPARED FOR YOUR REVIEW AND APPROVAL

☐ APPROVED AS SUBMITTED
☐ APPROVED AS CORRECTED
☐ RESUBMIT

PLEASE CHECK THE APPROPRIATE BOX AND RETURN ONE SIGNED COPY SO THAT WE MAY PROCEED WITH PRODUCTION.

SIGNED_____

TITLE_____ DATE_____

GERARD G. NAVARRA
STATE OF WASHINGTON
REGISTERED PROFESSIONAL ENGINEER
6/11/12

STATE 25-TA DRAWING

DESIGN: GGN	DATE: 6/11/12	25TA DOT VAULT
DRAWN: GGN		
CHECKED: CP	SCALE: 3/4"=1'-0"	STRUCT DETAIL SHEET — SHEET: 1 of 1
PROJECT NO. 12H2-2	THIS DRAWING IS INTENDED FOR THE USE OF THE INDIVIDUAL TO WHICH IT IS ADDRESSED AND CONTAINS INFORMATION THAT IS PRIVILEGED, CONFIDENTIAL AND EXEMPT FROM DISCLOSURE. IF YOU ARE NOT THE INTENDED RECIPIENT, PLEASE DO NOT DISSEMINATE, DISTRIBUTE OR COPY THIS BY E-MAIL OR OTHERWISE.	H² PRE-CAST INC. CONCRETE PRODUCTS (509) 884-6644 Phone (509) 884-4567 Fax
DWG STATUS: REVIEW		