# J-11 Type 4 Heavy Duty

1/5

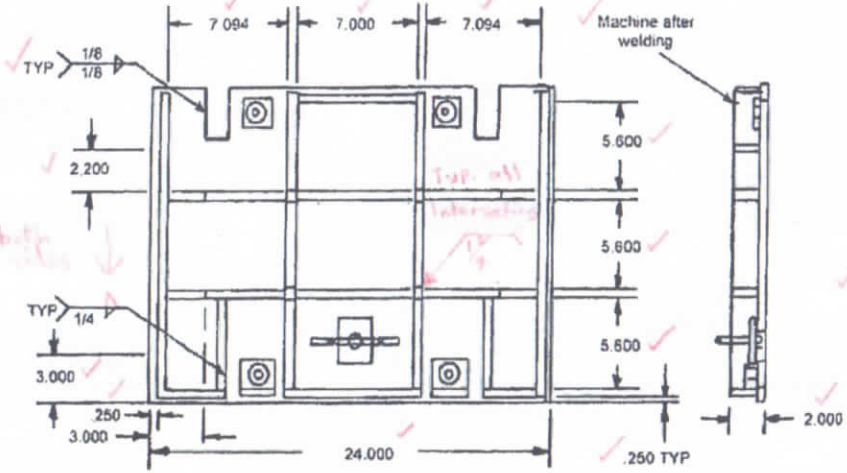


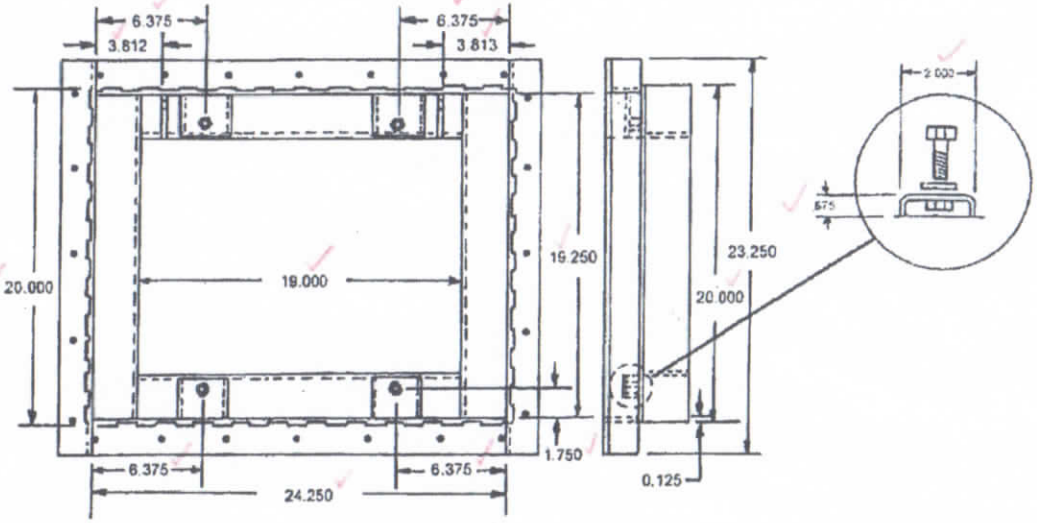


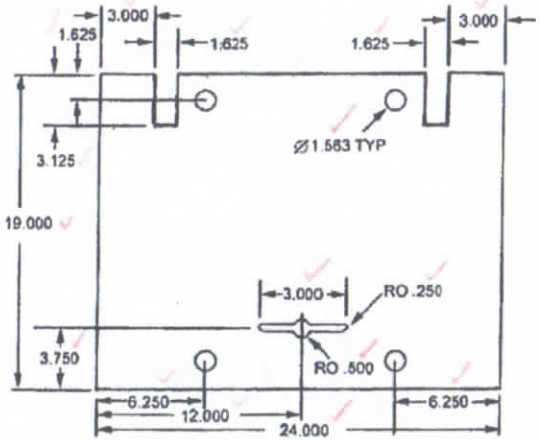


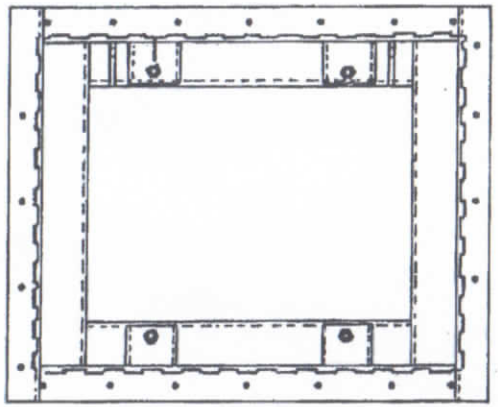

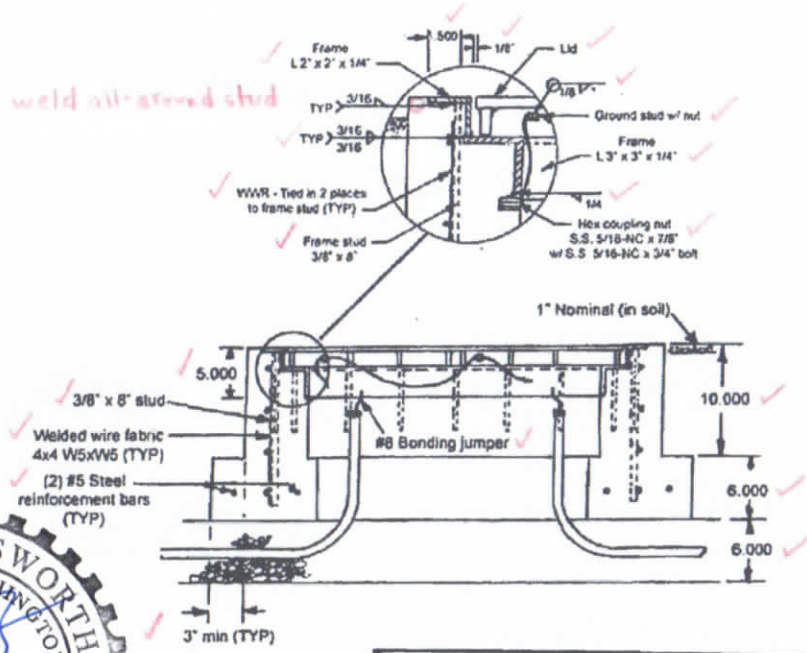


APPROVED AS NOTED
Washington State
Department of Transportation
HQ Traffic Operations Office
DATE October 17, 2007 TAT

ERIK B. AINSWORTH
STATE OF WASHINGTON
38284
4/9/14
REGISTERED
PROFESSIONAL ENGINEER

FOG TITE
INCORPORATED

2/12

# J-11 Type 4 Heavy Duty Box Detail

2/5

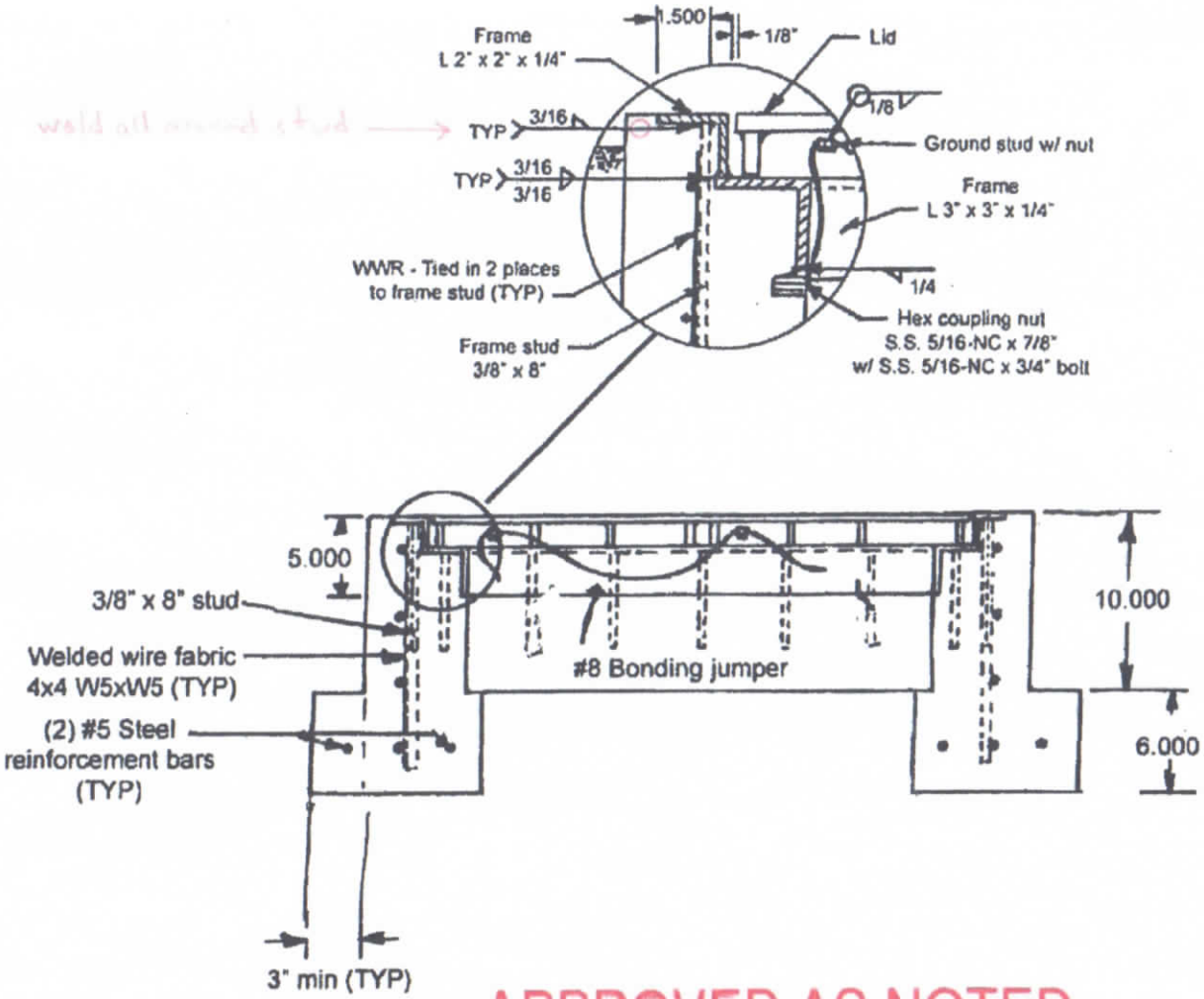


ERIK B. AINSWORTH
STATE OF WASHINGTON
38284
REGISTERED
PROFESSIONAL ENGINEER
4/9/14

APPROVED AS NOTED
Washington State
Department of Transportation
HQ Traffic Operations Office
DATE October 17, 2007 TAT

FOG TITE
INCORPORATED

3/17

# J-11 Type 4 Heavy Duty Frame Detail

3/5

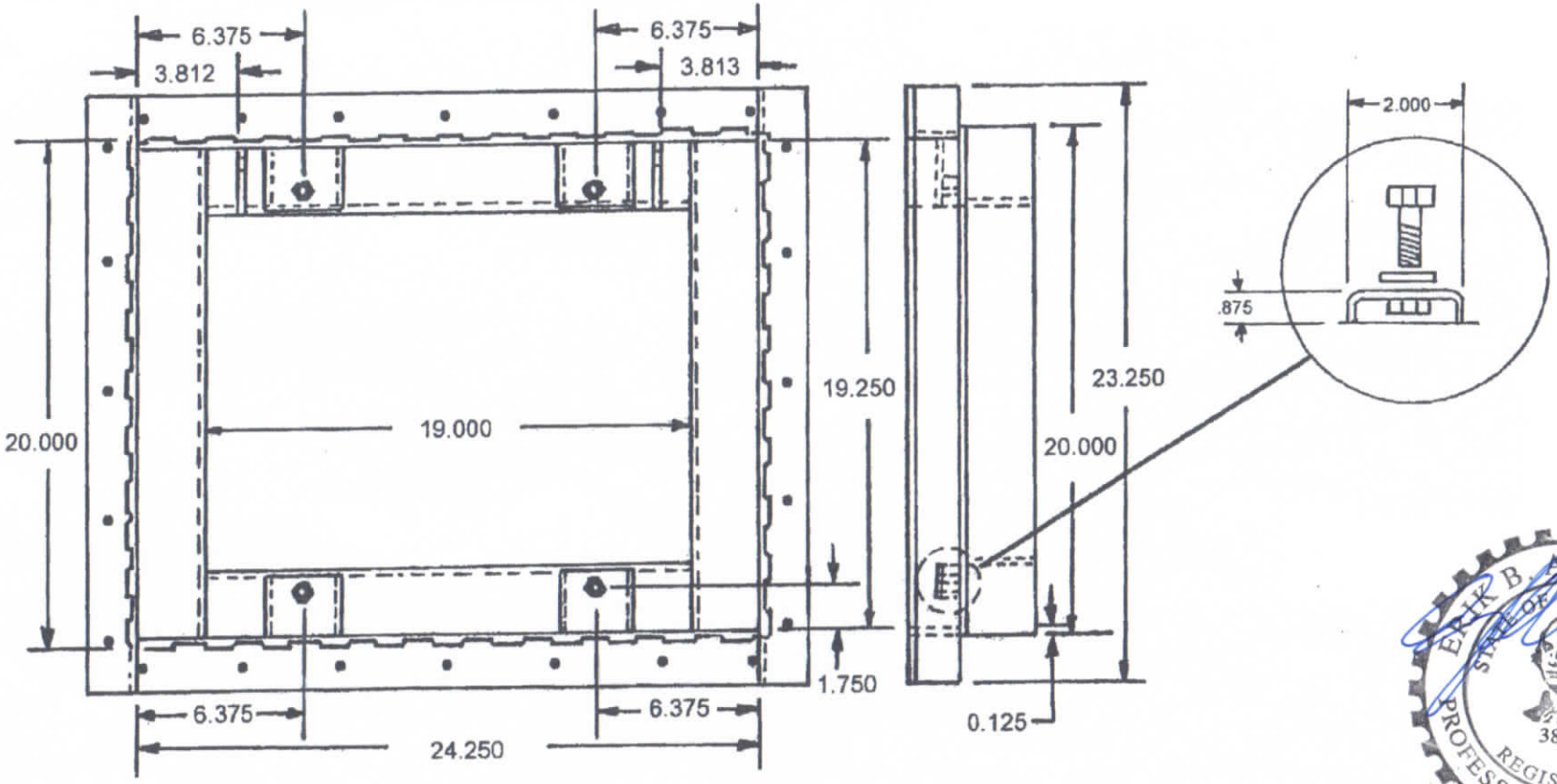


APPROVED
Washington State
Department of Transportation
HQ Traffic Operations Office
DATE October 17, 2007 TAT

FOG TITE
INCORPORATED

# J-11 Type 4 Heavy Duty Lid (Bottom) Detail

4/5

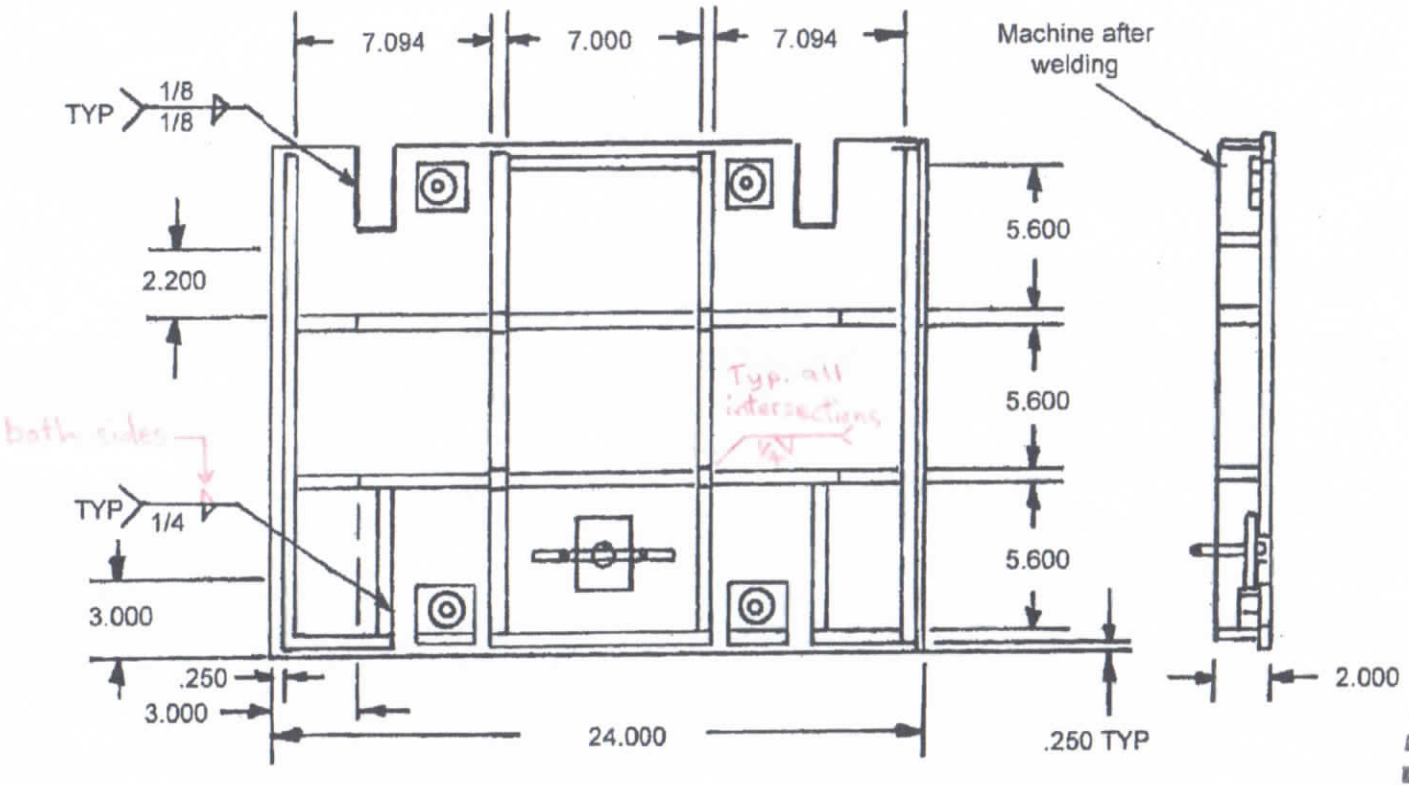


APPROVED AS NOTED
Washington State
Department of Transportation
HQ Traffic Operations Office
DATE October 17, 2007 TAT

FOG TITE INCORPORATED

5/17

# J-11 Type 4 Heavy Duty Lid & Frame (Top) Detail

5/5

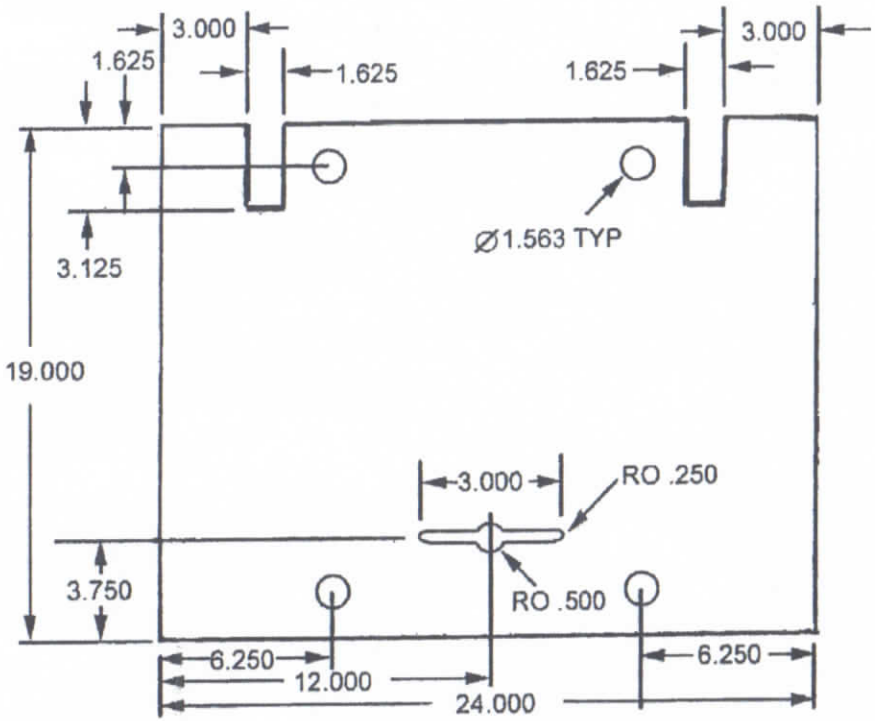


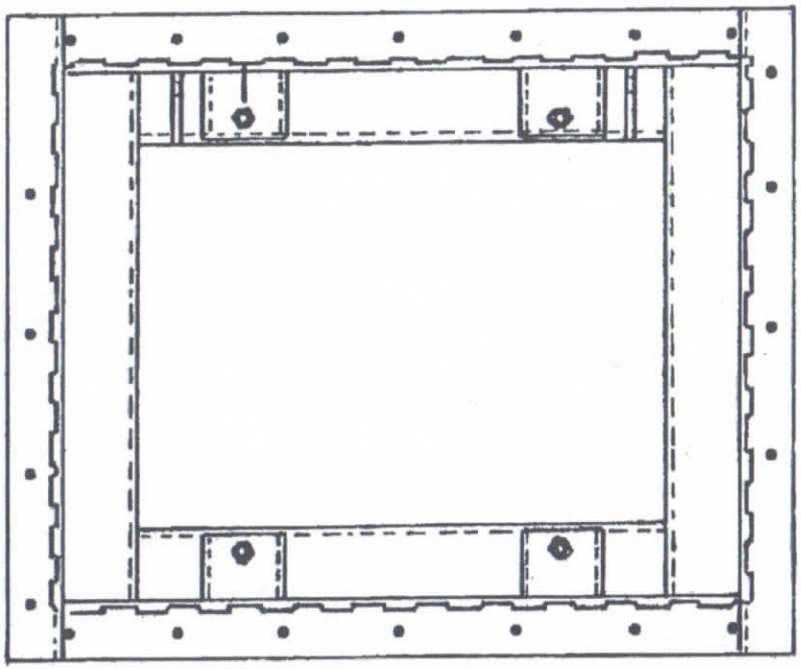

ERIK B. AINSWORTH
STATE OF WASHINGTON
38284
REGISTERED
PROFESSIONAL ENGINEER
4/9/14

APPROVED
Washington State
Department of Transportation
HQ Traffic Operations Office
DATE October 17, 2007 TAT

FOG TITE INCORPORATED

6/17