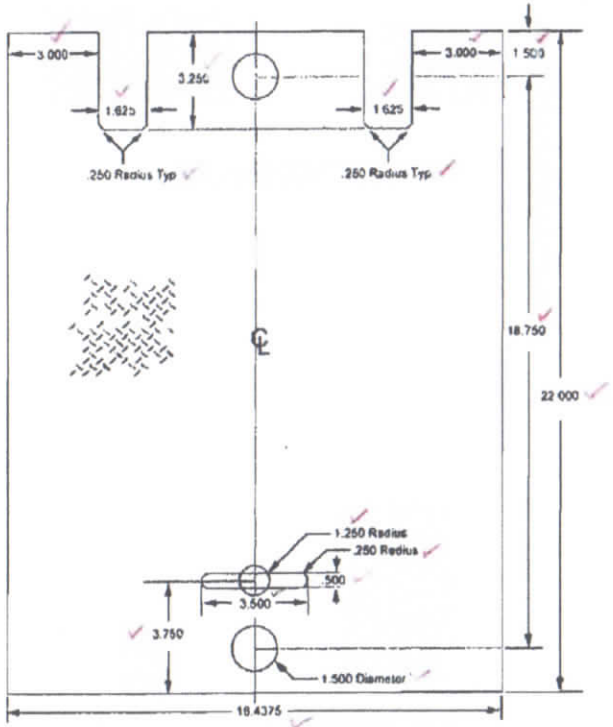

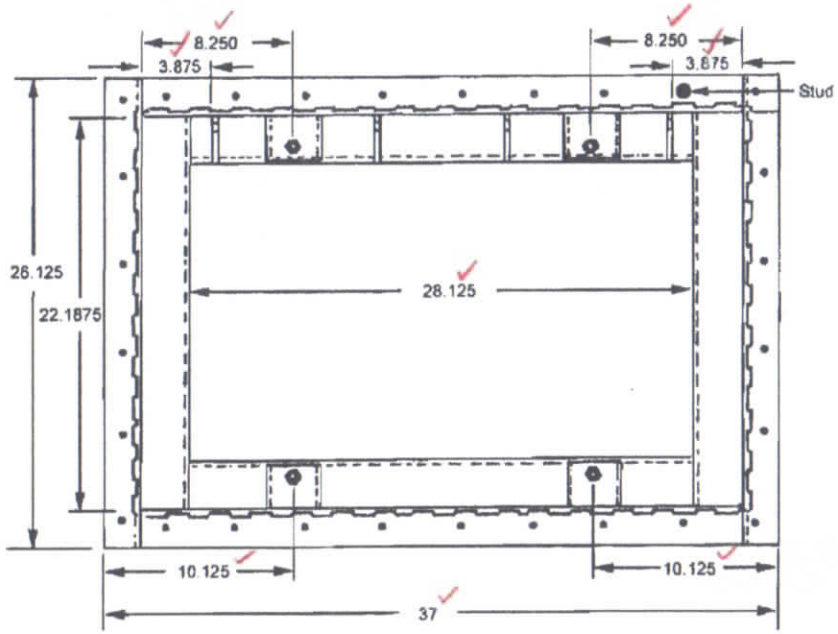

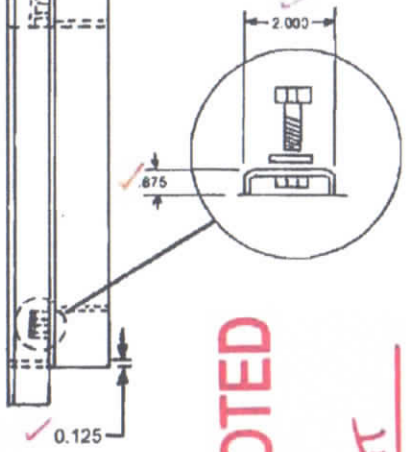

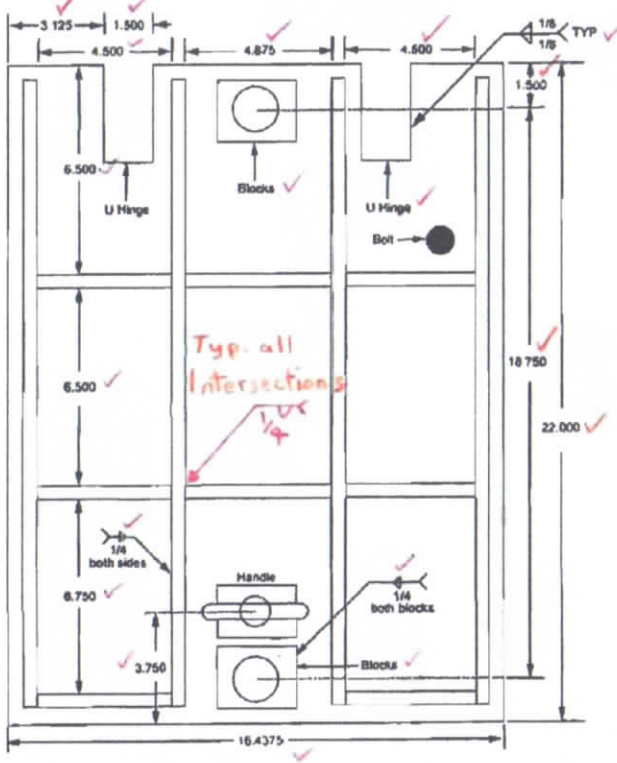

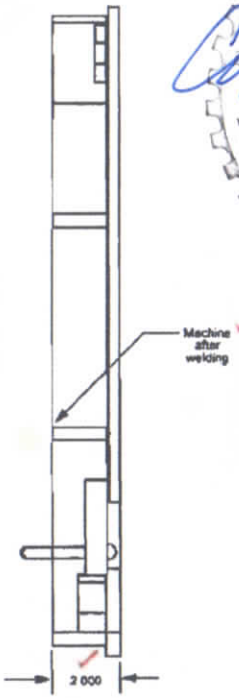

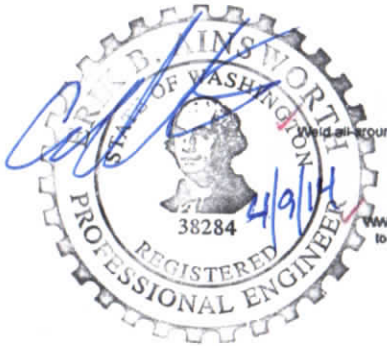

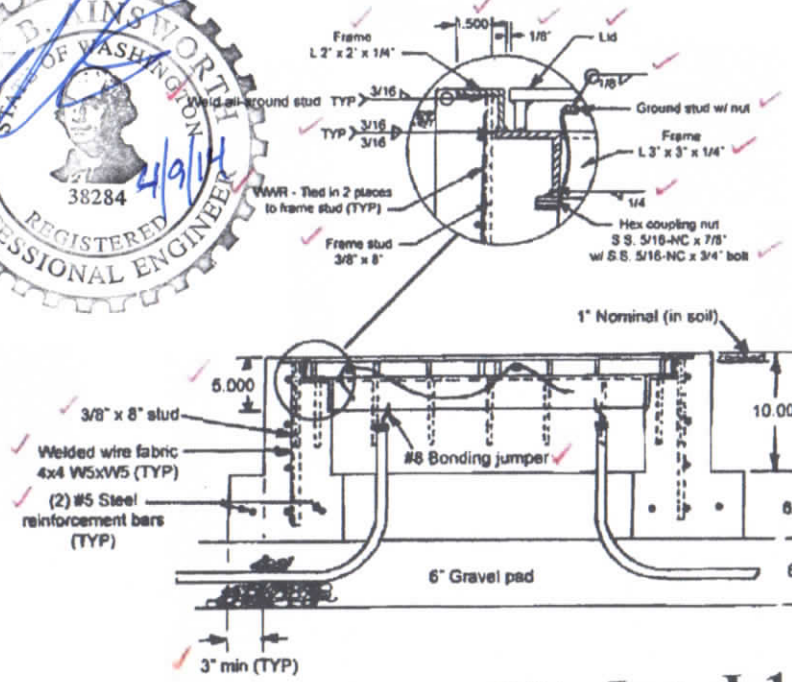

APPROVED AS NOTED
Washington State
Department of Transportation
HQ Traffic Operations Office
DATE May 13, 2008 TAT

Fog Tite Inc. J-11 Type 5

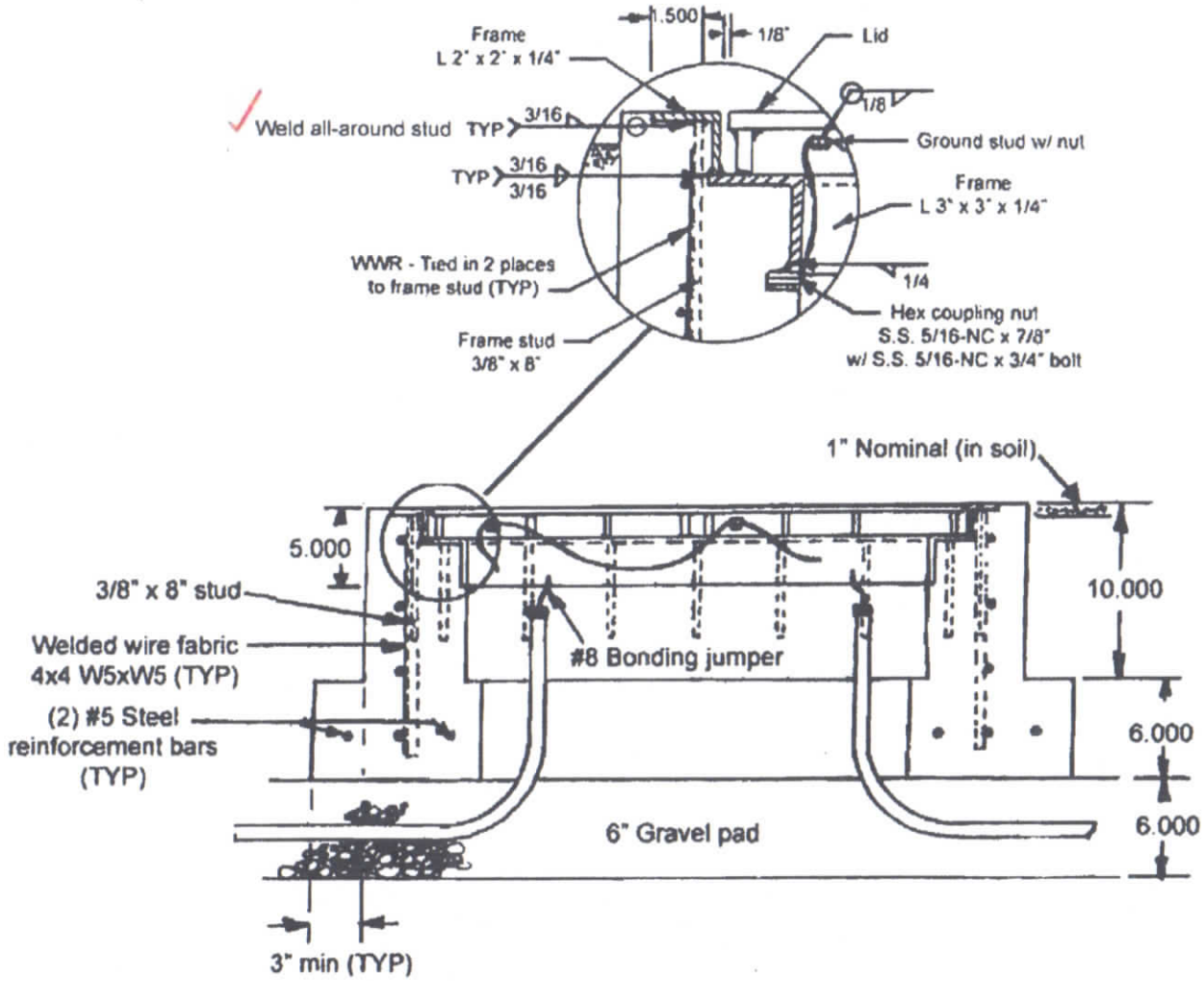

APPROVED
Washington State
Department of Transportation
HQ Traffic Operations Office
DATE May 13, 2008 TAT

Fog Tite Inc. J-11 Type 5

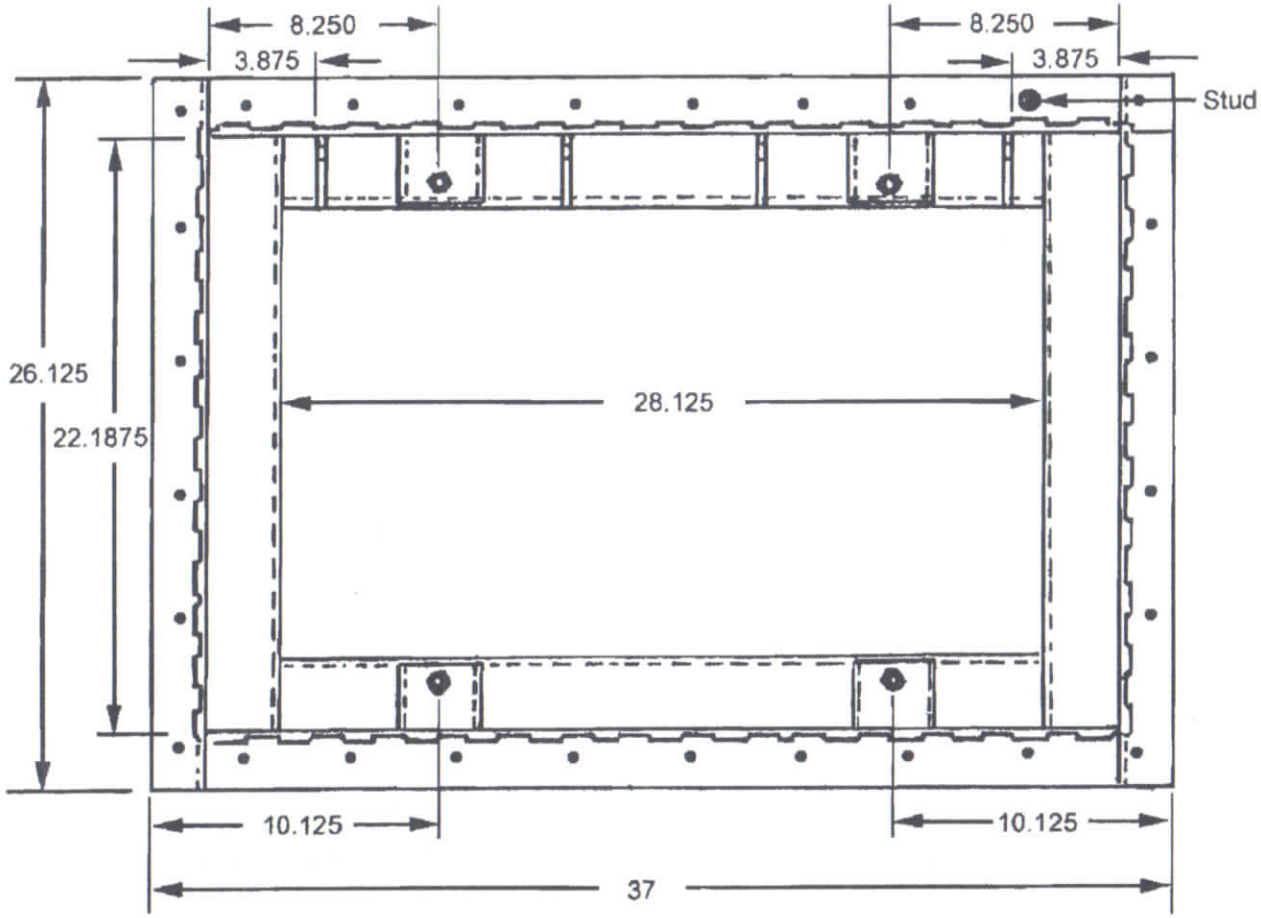

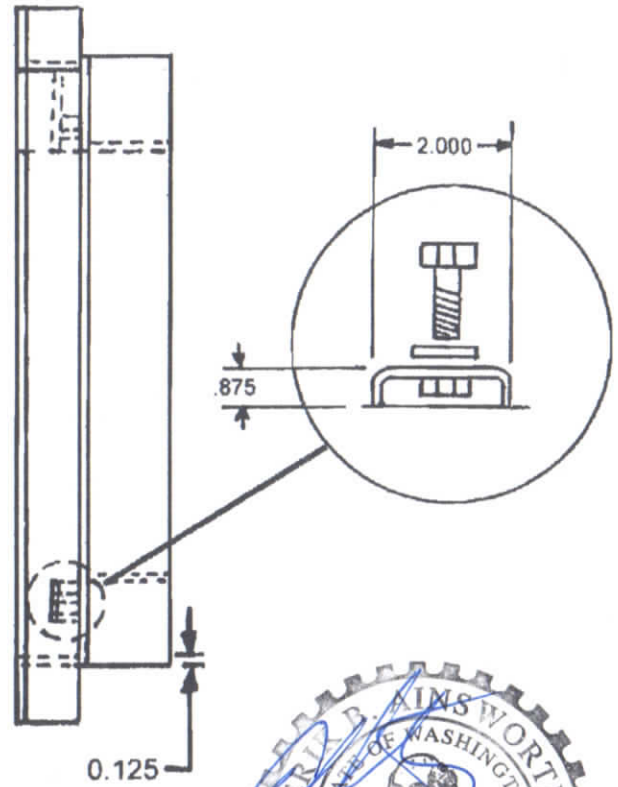

APPROVED
Washington State
Department of Transportation
HQ Traffic Operations Office
DATE May 13, 2008 TAT

ERIK B. AINSWORTH
STATE OF WASHINGTON
38284
REGISTERED
PROFESSIONAL ENGINEER
4/9/14

Fog Tite Inc. J-11 Type 5

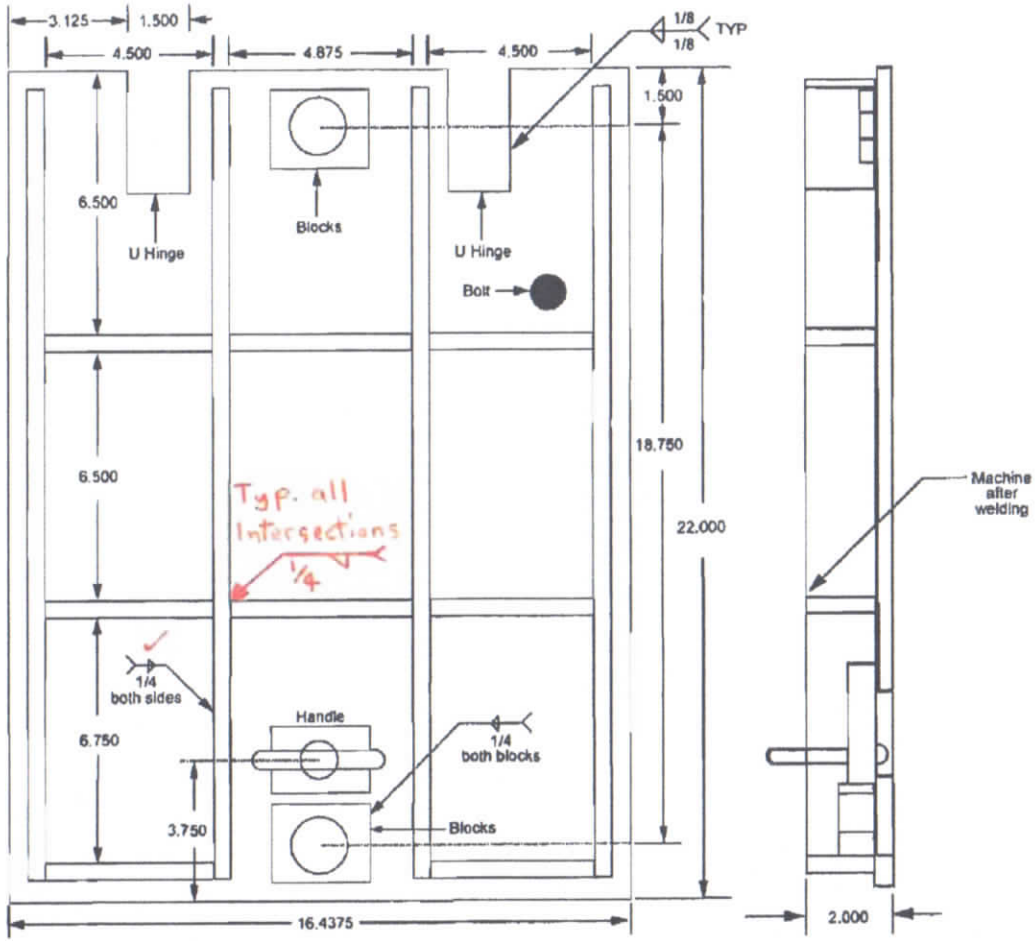

APPROVED AS NOTED
Washington State
Department of Transportation
HQ Traffic Operations Office
DATE May 13, 2008 TAT

Fog Tite Inc. J-11 Type 5

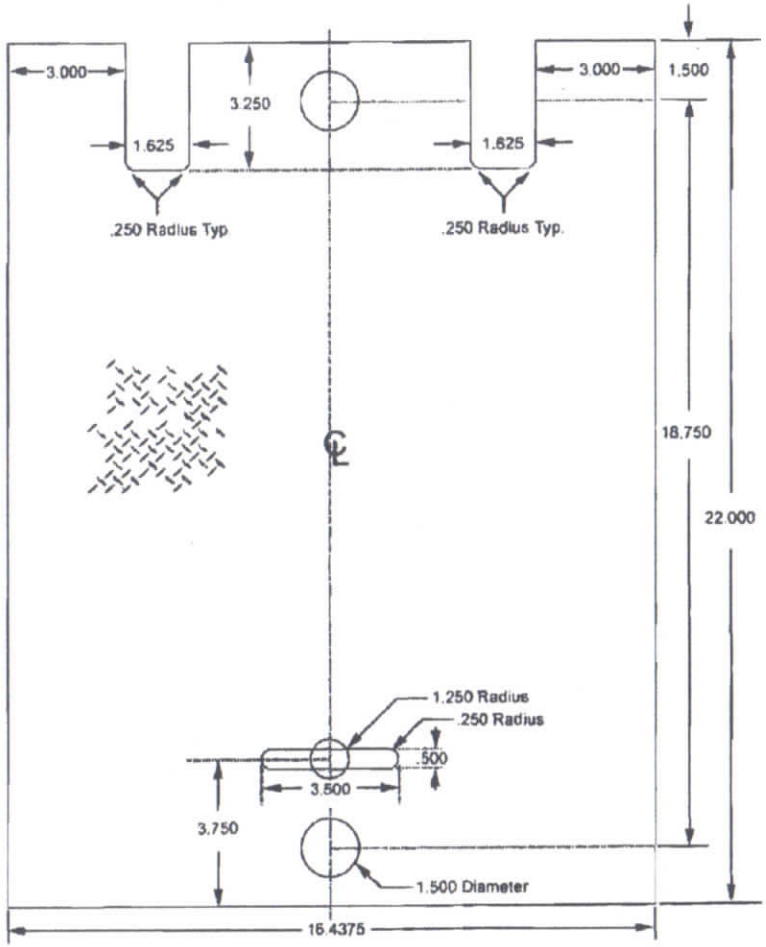

APPROVED
Washington State
Department of Transportation
HQ Traffic Operations Office
DATE May 13, 2008 TAT

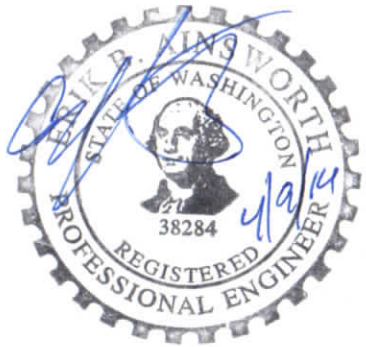

Fog Tite Inc. J-11 Type 5