H² PRE-CAST INC.
CONCRETE PRODUCTS

JUNCTION BOX - TYPE 1

ELECTRIC

CHECK REQUIRED SPECIFICATION	
	STANDARD
	WSDOT / STATE CONTRACT NUMBER _____
	SLIPNOT
	GALVANIZED DIAMOND PLATE
	BLACK

GENERAL NOTES:
LID TO BE PER TRAVIS INDUSTRIES PRODUCT, PART NUMBERS:
700-00001 (DP) - DIAMOND PLATE
700-00031 (SN) - SLIPNOT
FRAME PART #
700-00003 (DP) - DIAMOND PLATE
700-00032 (SN) - SLIPNOT
CONCRETE w/FIBERMESH REINFORCING
f'c=4000 psi @28 days

lid & frame shall be hot-dip galvanized per 9-29.2(1)A

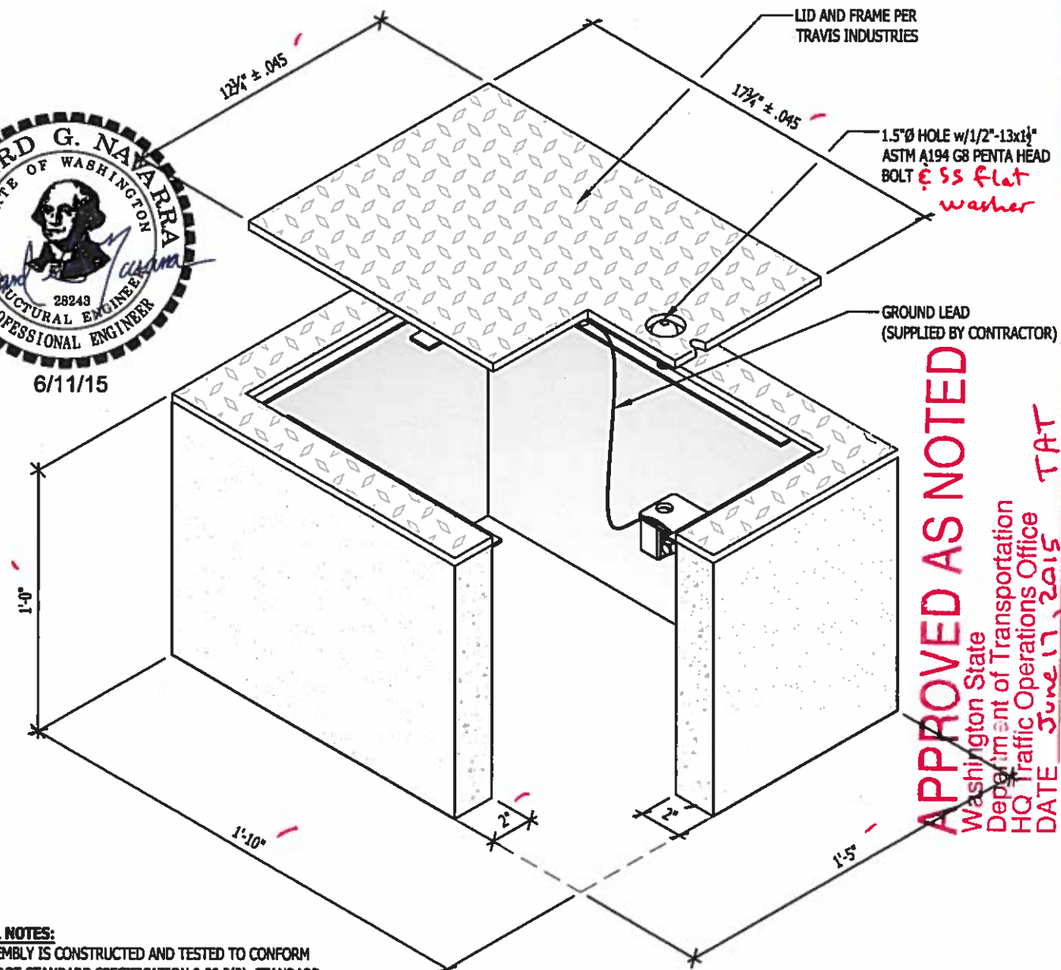

GERARD G. NAVARRA
STATE OF WASHINGTON
28243
STRUCTURAL ENGINEER
PROFESSIONAL ENGINEER
6/11/15

APPROVED AS NOTED
Washington State
Department of Transportation
HQ Traffic Operations Office
DATE June 17, 2015 TAT

GENERAL NOTES:
THIS ASSEMBLY IS CONSTRUCTED AND TESTED TO CONFORM WITH WSDOT STANDARD SPECIFICATION 9-29.2(2), STANDARD DUTY JUNCTION BOXES

H² Pre-Cast Inc.
3835 N. Clemons
East Wenatchee, WA

Phone: (509) 884-6644
Fax: (509) 884-4567
Web: www.h2precast.com

© 2007 H² Pre-Cast Inc.

THE INFORMATION CONTAINED IN THIS DRAWING IS THE SOLE PROPERTY OF H² PRECAST INC. ANY REPRODUCTION IN PART OR WHOLE WITHOUT THE WRITTEN PERMISSION OF FM&M IS PROHIBITED.

This assembly is constructed and tested to conform with WSDOT Standard Specification 9-29.2(2), Standard Duty Junction Boxes.

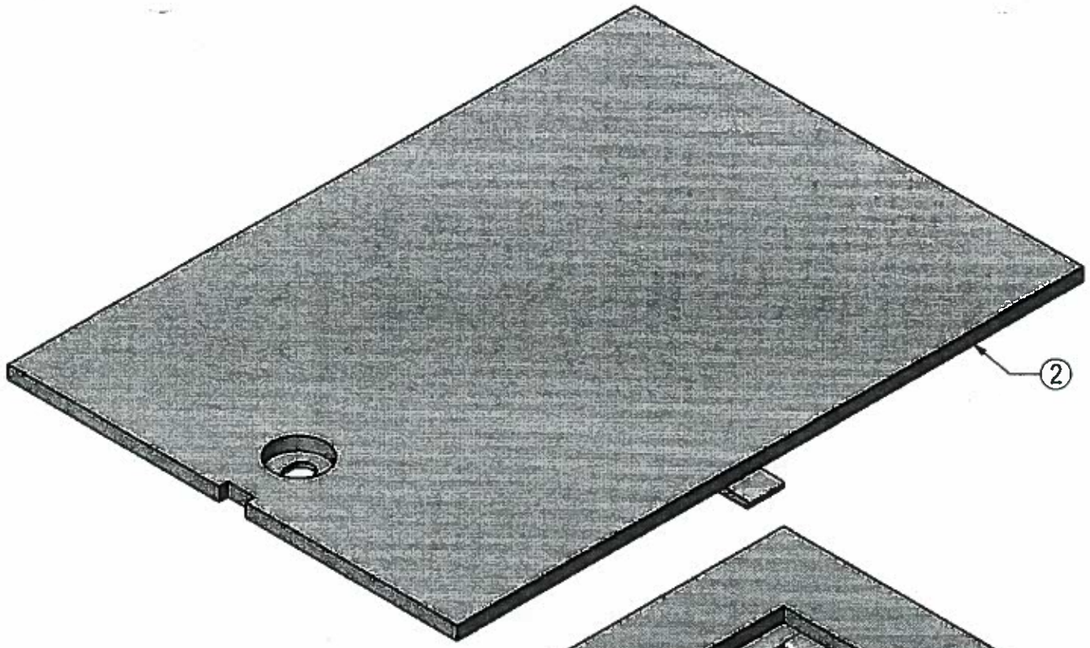

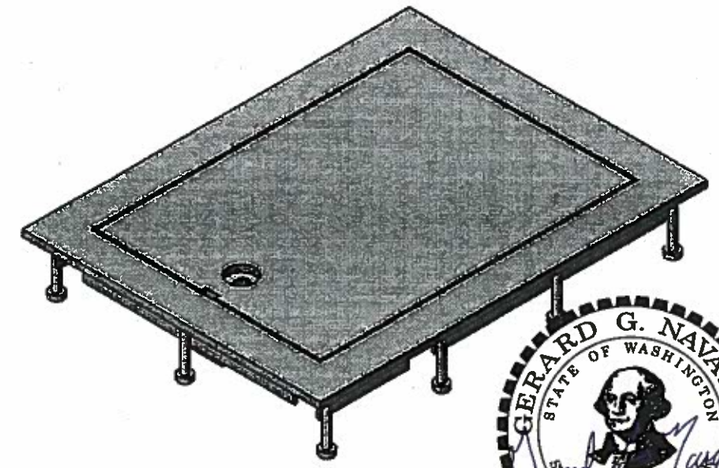

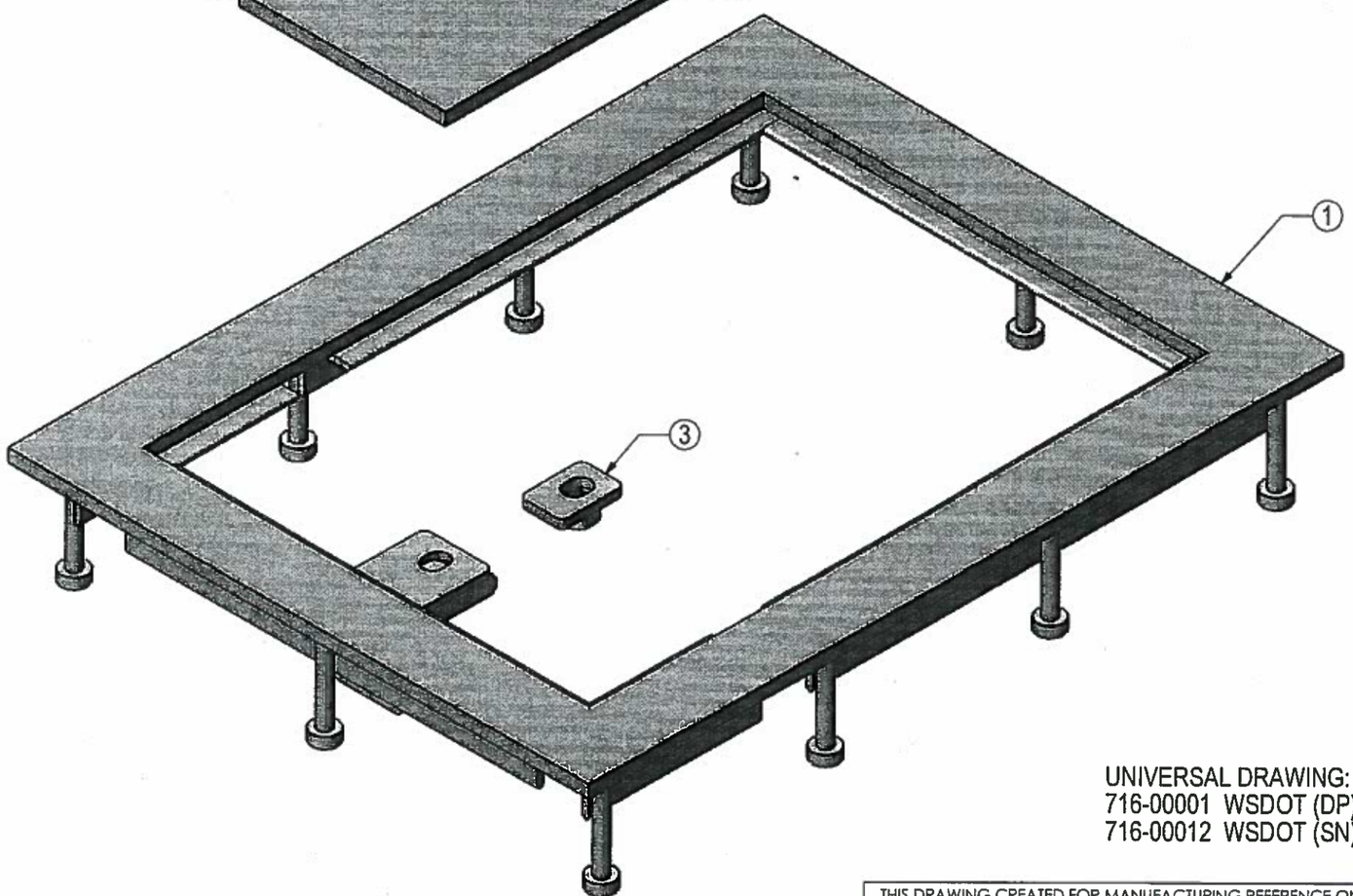

GERARD G. NAVARRA
STATE OF WASHINGTON
28243
STRUCTURAL ENGINEER
PROFESSIONAL ENGINEER
6/11/15

APPROVED
Washington State
Department of Transportation
HQ Traffic Operations Office
DATE June 17, 2015 TAT

#	SKU#	DESCRIPTION	QTY.
3	700-00005	LOCK TAB WELD ASSY	1
2	700-00001 (DP) 700-00031 (SN)	LID WELD ASSY, TYPEI JBOX WSDOT	1
1	700-00003 (DP) 700-00032 (SN)	FRAME WELD ASS'Y, TYPEI JBOX WSDOT	1

PARTS LIST

UNIVERSAL DRAWING:
716-00001 WSDOT (DP)
716-00012 WSDOT (SN)

Prepared for H² PRECAST INC.

TYPEI JBOX WSDOT

THIS DRAWING CREATED FOR MANUFACTURING REFERENCE ONLY AND IS NOT INTENDED TO SUPERCEDE H² PRECAST INC. DRAWINGS OR SPECIFICATIONS OF THE REFERENCED PART.

HOLES ± 0.030
X.XXX ± 0.060
ANGLES ± 1.0°

SIZE A | DRAWN BY: DREW KEIM | PROGRAM NUMBER: | DATE CREATED: 5/22/14 | REV.

SCALE: NONE | CAD FILE: TYPEI JBOX WSDOT | SHEET 1 of 1

THE INFORMATION CONTAINED IN THIS DRAWING IS THE SOLE PROPERTY OF H² PRECAST INC. ANY REPRODUCTION IN PART OR WHOLE WITHOUT THE WRITTEN PERMISSION OF FM&M IS PROHIBITED.

This assembly is constructed and tested to conform with WSDOT Standard Specification 9-29.2(2), Standard Duty Junction Boxes.

REV	DESCRIPTION	DATE	INITIALS
A	MODIFIED LATCH GUIDE & WELDING.	7/14	DK

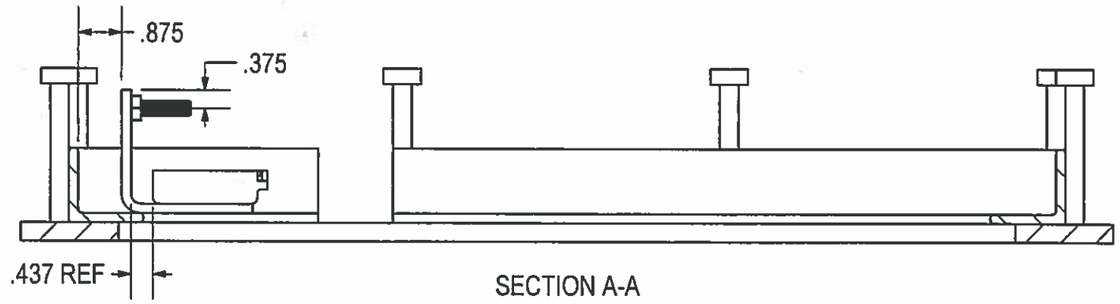

SECTION A-A

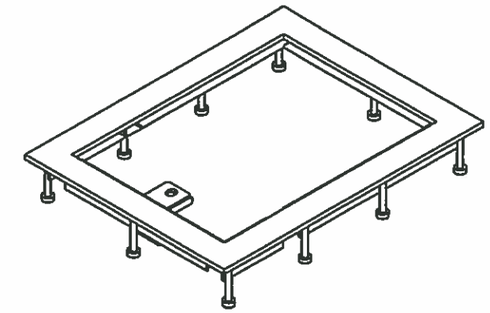

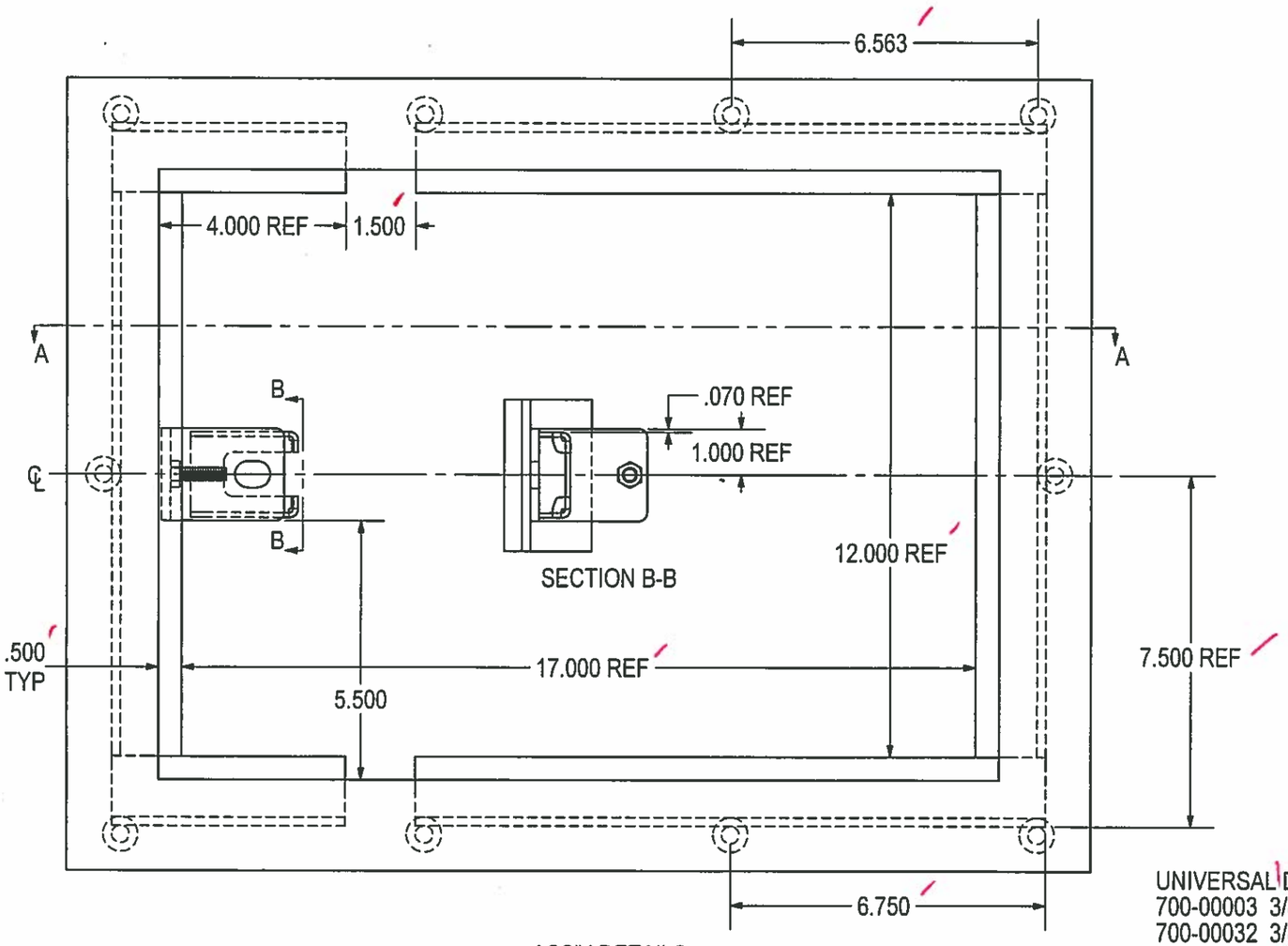

ASS'Y DETAILS

GERARD G. NAVARRA
STATE OF WASHINGTON
28243
STRUCTURAL ENGINEER
PROFESSIONAL ENGINEER
6/11/15

APPROVED
Washington State
Department of Transportation
HQ Traffic Operations Office
DATE June 17, 2015 TAT

UNIVERSAL DRAWING:
700-00003 3/8"DP
700-00032 3/8"SN

THIS DRAWING CREATED FOR MANUFACTURING REFERENCE ONLY AND IS NOT INTENDED TO SUPERCEDE H² PRECAST INC. DRAWINGS OR SPECIFICATIONS OF THE REFERENCED PART.

Prepared for H² PRECAST INC.

FRAME WELD ASS'Y, TYPEI JBOX WSDOT

HOLES ± 0.030	SIZE	DRAWN BY:	PROGRAM NUMBER:	REV.
X.XXX ± 0.060	A	DREW KEIM	DATE CREATED: 4/29/14	A
ANGLES ± 1.0°	SCALE :NONE	CAD FILE: FRAME (A). TI JBOX WSDOT	SHEET 1 of 2	

THE INFORMATION CONTAINED IN THIS DRAWING IS THE SOLE PROPERTY OF H² PRECAST INC. ANY REPRODUCTION IN PART OR WHOLE WITHOUT THE WRITTEN PERMISSION OF FM&M IS PROHIBITED.

This assembly is constructed and tested to conform with WSDOT Standard Specification 9-29.2(2), Standard Duty Junction Boxes.

REV	DESCRIPTION	DATE	INITIALS
A	MODIFIED LATCH GUIDE & WELDING.	7/14	DK

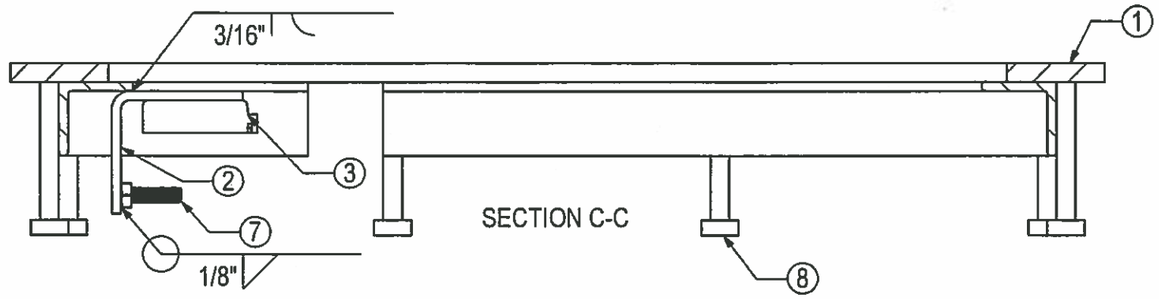

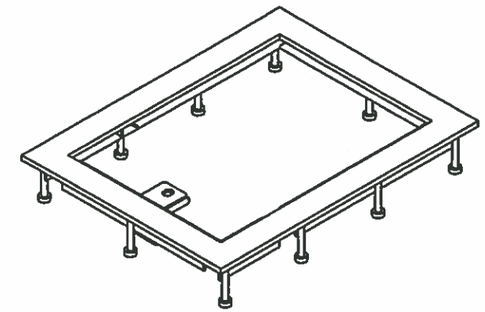

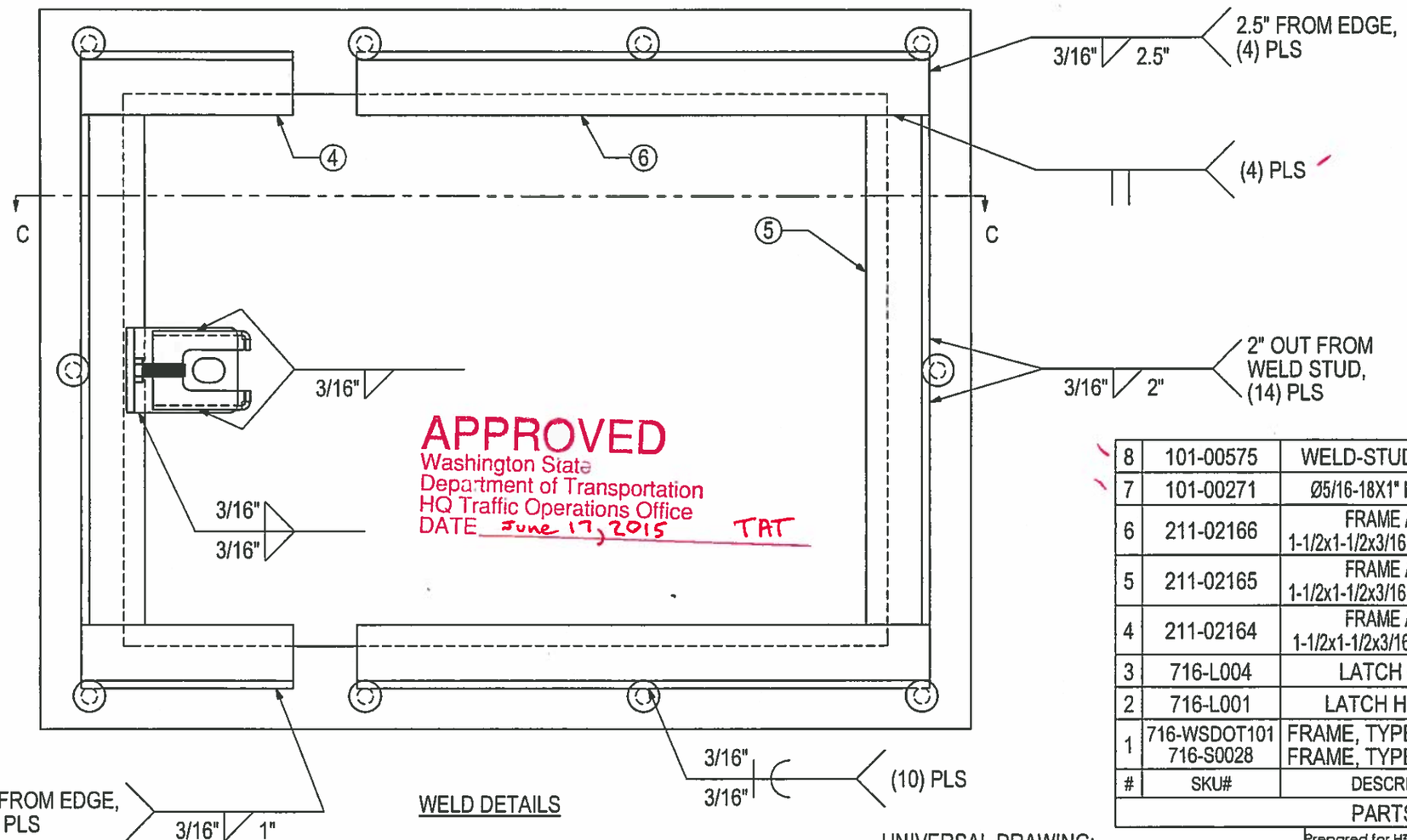

APPROVED
Washington State
Department of Transportation
HQ Traffic Operations Office
DATE June 17, 2015 TAT

GERARD G. NAVARRA
STATE OF WASHINGTON
28243
STRUCTURAL ENGINEER
PROFESSIONAL ENGINEER
6/11/15

#	SKU#	DESCRIPTION	MATERIAL	QTY.
8	101-00575	WELD-STUD, 3/8x3-1/8	C1015	10
7	101-00271	Ø5/16-18X1" HHCS 316SS	316SS	1
6	211-02166	FRAME ANGLE, 1-1/2x1-1/2x3/16 x 13.500 LONG	A36HR	2
5	211-02165	FRAME ANGLE, 1-1/2x1-1/2x3/16 x 12.000 LONG	A36HR	2
4	211-02164	FRAME ANGLE, 1-1/2x1-1/2x3/16 x 5.000 LONG	A36HR	2
3	716-L004	LATCH GUIDE	A36HR	1
2	716-L001	LATCH HOUSING	A36HR	1
1	716-WSDOT101 716-S0028	FRAME, TYPE I J-BOX DP FRAME, TYPE I J-BOX SN	ASTM A786 FP	1

PARTS LIST

UNIVERSAL DRAWING:
700-00003 3/8"DP
700-00032 3/8"SN

Prepared for H² PRECAST INC.

FRAME WELD ASS'Y, TYPEI JBOX WSDOT

THIS DRAWING CREATED FOR MANUFACTURING REFERENCE ONLY AND IS NOT INTENDED TO SUPERCEDE H² PRECAST INC. DRAWINGS OR SPECIFICATIONS OF THE REFERENCED PART.

HOLES ± 0.030
X.XXX ± 0.060
ANGLES ± 1.0°

SIZE A | DRAWN BY: DREW KEIM | PROGRAM NUMBER: | DATE CREATED: 4/29/14 | REV. A

CAD FILE: FRAME (A). TI JBOX WSDOT | SHEET 2 of 2

THE INFORMATION CONTAINED IN THIS DRAWING IS THE SOLE PROPERTY OF H² PRECAST INC. ANY REPRODUCTION IN PART OR WHOLE WITHOUT THE WRITTEN PERMISSION OF FM&M IS PROHIBITED.

This assembly is constructed and tested to conform with WSDOT Standard Specification 9-29.2(2), Standard Duty Junction Boxes.

REV	DESCRIPTION	DATE	INITIALS
A	ADDED CHAMFER NOTE	7/14	DK

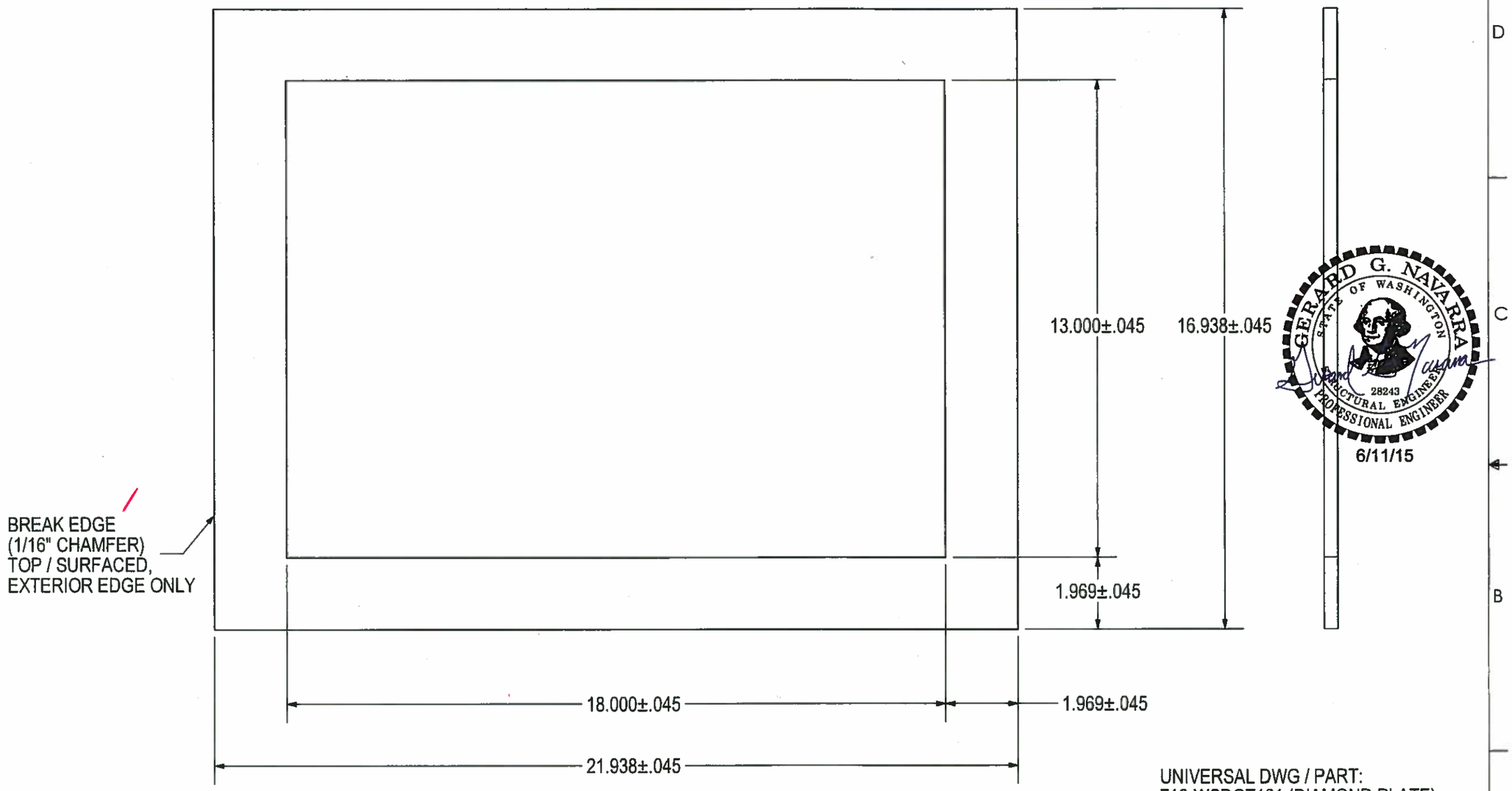

UNIVERSAL DWG / PART:
716-WSDOT101 (DIAMOND PLATE)
WSDOT - TYPE I J-BOX
716-S0028 (SLIPNOT PLATE)
SDOT - TYPE I J-BOX
WSDOT - TYPE I J-BOX

APPROVED
Washington State
Department of Transportation
HQ Traffic Operations Office
DATE June 17, 2015 TAT

3/8 DIAMOND PLATE / SLIPNOT (ASTM A786 FLOOR PLATE)
21.938 X 16.938
(1) REQ'D

THIS DRAWING CREATED FOR MANUFACTURING REFERENCE ONLY AND IS NOT INTENDED TO SUPERCEDE H² PRECAST INC. DRAWINGS OR SPECIFICATIONS OF THE REFERENCED PART.

Prepared for H² PRECAST INC.

FRAME, TYPE I

SIZE	DRAWN BY:	PROGRAM NUMBER:	REV.
A	DREW KEIM	DATE CREATED: 5/31/12	A
SCALE :NONE	CAD FILE: 716-S0028A	SHEET	OF

THE INFORMATION CONTAINED IN THIS DRAWING IS THE SOLE PROPERTY OF H² PRECAST INC. ANY REPRODUCTION IN PART OR WHOLE WITHOUT THE WRITTEN PERMISSION OF FM&M IS PROHIBITED.

This assembly is constructed and tested to conform with WSDOT Standard Specification 9-29.2(2), Standard Duty Junction Boxes.

REV	DESCRIPTION	DATE	INITIALS
A	3/16 THICKNESS WAS 1/4. UPDATED DESCRIPTION.	7/14	DK

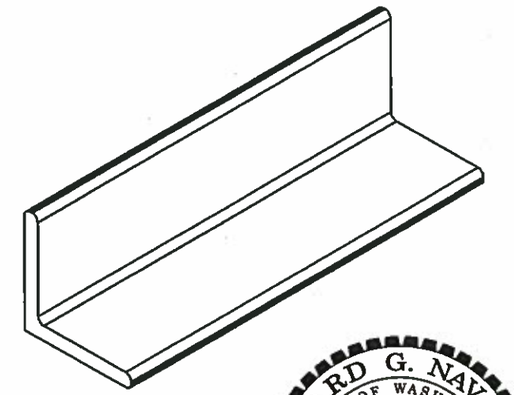

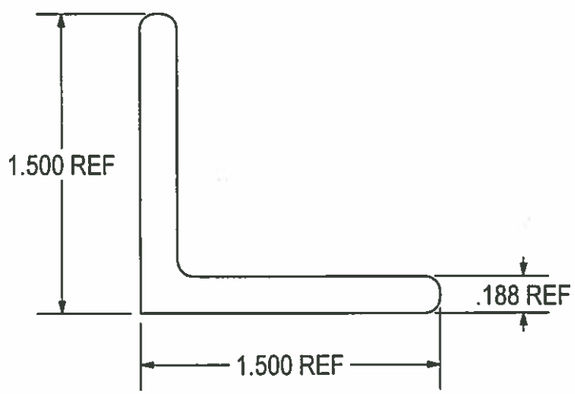

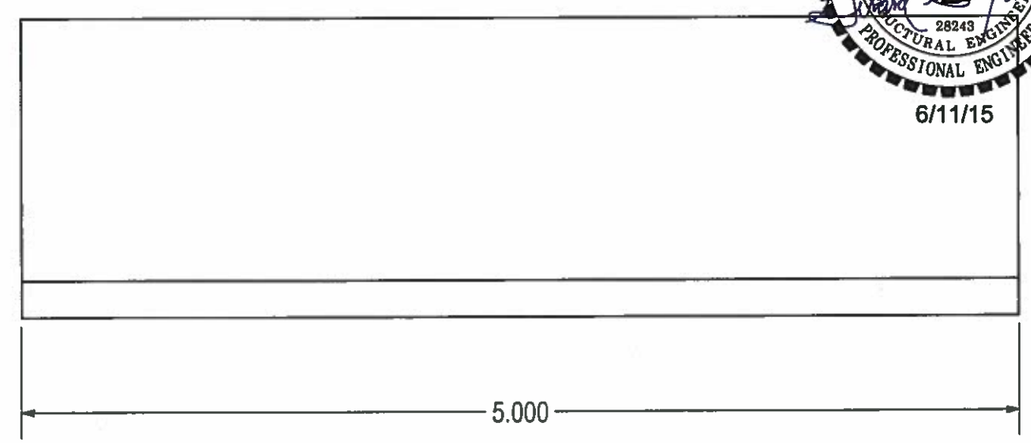

GERARD G. NAVARRA
STATE OF WASHINGTON
28243
STRUCTURAL ENGINEER
PROFESSIONAL ENGINEER
6/11/15

APPROVED
Washington State
Department of Transportation
HQ Traffic Operations Office
DATE June 17, 2015 TAT

ANGLE, 1-1/2 x 1-1/2 x 3/16 X 5.000 LONG
(2) REQ'D

THIS DRAWING CREATED FOR MANUFACTURING REFERENCE ONLY AND IS NOT INTENDED TO SUPERCEDE H² PRECAST INC. DRAWINGS OR SPECIFICATIONS OF THE REFERENCED PART.

Prepared for H² PRECAST INC.

FRAME ANGLE,
1-1/2x1-1/2x3/16 x 5.000 LONG

HOLES ± 0.030 X.XXX ± 0.060 ANGLES ± 1.0°	SIZE A	DRAWN BY: DREW KEIM	PROGRAM NUMBER: 211-02164 DATE CREATED: 5/7/14	REV. A
	SCALE: NONE	CAD FILE 716-F0055A		SHEET 1 of 1

THE INFORMATION CONTAINED IN THIS DRAWING IS THE SOLE PROPERTY OF H² PRECAST INC. ANY REPRODUCTION IN PART OR WHOLE WITHOUT THE WR[illegible] PERMISSION OF FM&M IS PROHIBITED.

This assembly is constructed and tested to conform with WSDOT Standard Specification 9-29.2(2), Standard Duty Junction Boxes.

REV	DESCRIPTION	DATE	INITIALS
A	3/16 THICKNESS WAS 1/4. UPDATED DESCRIPTION.	7/14	DK

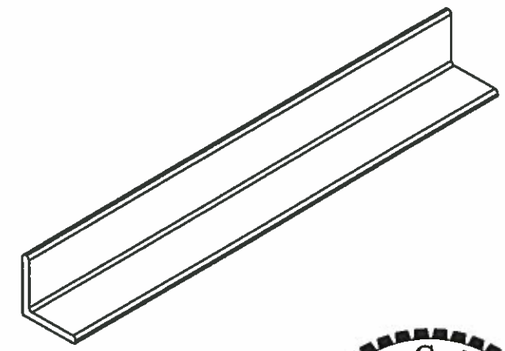

GERARD G. NAVARRA
STATE OF WASHINGTON
28243
STRUCTURAL ENGINEER
PROFESSIONAL ENGINEER
6/11/15

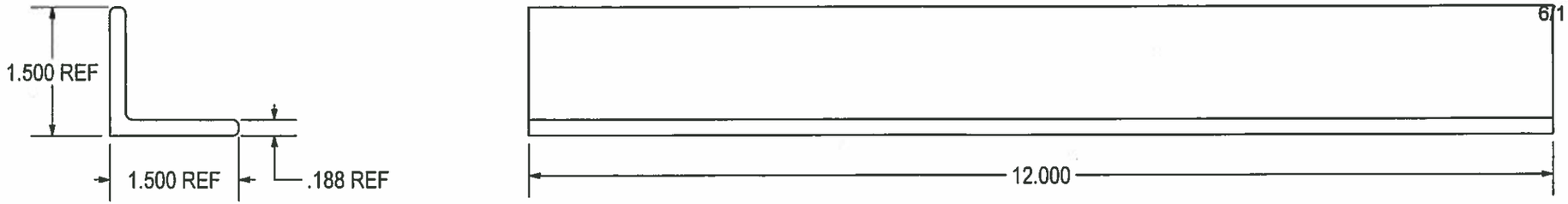

APPROVED
Washington State
Department of Transportation
HQ Traffic Operations Office
DATE June 17, 2015 TAT

ANGLE, 1-1/2 x 1-1/2 x 3/16 X 12.000 LONG
(2) REQ'D

THIS DRAWING CREATED FOR MANUFACTURING REFERENCE ONLY AND IS NOT INTENDED TO SUPERCEDE H² PRECAST INC. DRAWINGS OR SPECIFICATIONS OF THE REFERENCED PART.

Prepared for H² PRECAST INC.

FRAME ANGLE,
1-1/2x1-1/2x3/16 x 12.000 LONG

HOLES ± 0.030 X.XXX ± 0.060 ANGLES ± 1.0°	SIZE A	DRAWN BY: DREW KEIM	PROGRAM NUMBER: 211-02165 DATE CREATED: 5/7/14	REV. A
	SCALE: NONE	CAD FILE: 716-F0053A		SHEET 1 of 1

THE INFORMATION CONTAINED IN THIS DRAWING IS THE SOLE PROPERTY OF H² PRECAST INC. ANY REPRODUCTION IN PART OR WHOLE WITHOUT THE WP[illegible] PERMISSION OF FM&M IS PROHIBITED.

This assembly is constructed and tested to conform with WSDOT Standard Specification 9-29.2(2), Standard Duty Junction Boxes.

REV	DESCRIPTION	DATE	INITIALS
A	3/16 THICKNESS WAS 1/4. UPDATED DESCRIPTION.	7/14	DK

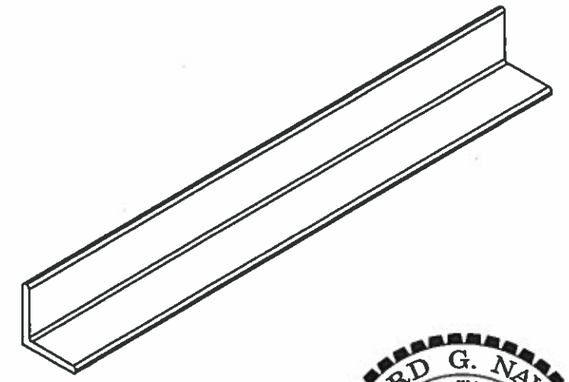

GERARD G. NAVARRA
STATE OF WASHINGTON
28243
STRUCTURAL ENGINEER
PROFESSIONAL ENGINEER

6/11/15

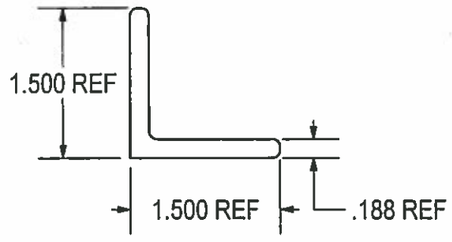

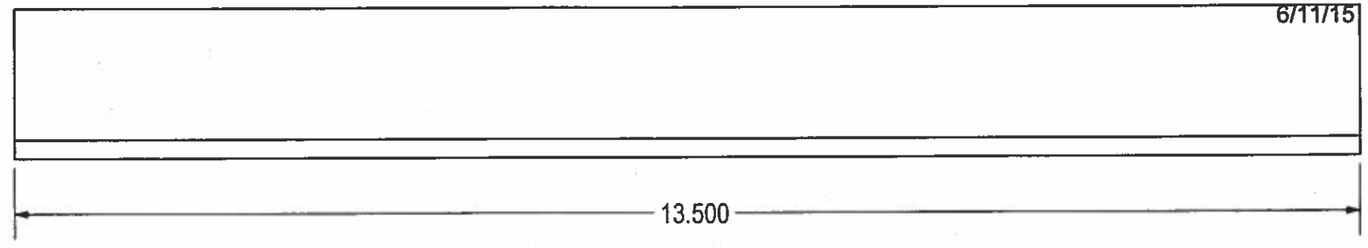

APPROVED AS NOTED
Washington State
Department of Transportation
HQ Traffic Operations Office
DATE June 17, 2015 TAT

3/16

ANGLE, 1-1/2 x 1-1/2 x 13/16 X 13.500 LONG
(2) REQ'D

THIS DRAWING CREATED FOR MANUFACTURING REFERENCE ONLY AND IS NOT INTENDED TO SUPERCEDE H² PRECAST INC. DRAWINGS OR SPECIFICATIONS OF THE REFERENCED PART.

Prepared for H² PRECAST INC.

FRAME ANGLE,
1-1/2x1-1/2x3/16 x 13.500 LONG

HOLES ± 0.030	SIZE	DRAWN BY:	PROGRAM NUMBER:	211-02166	REV.
X.XXX ± 0.060	A	DREW KEIM	DATE CREATED: 5/7/14		A
ANGLES ± 1.0°	SCALE: NONE	CAD FILE: 716-F0054A		SHEET 1 of 1	

THE INFORMATION CONTAINED IN THIS DRAWING IS THE SOLE PROPERTY OF H² PRECAST INC. ANY REPRODUCTION IN PART OR WHOLE WITHOUT THE WRITTEN PERMISSION OF FM&M IS PROHIBITED.

This assembly is constructed and tested to conform with WSDOT Standard Specification 9-29.2(2), Standard Duty Junction Boxes.

REV	DESCRIPTION	DATE	INITIALS
A	ADDED CHAMFER NOTE	7/14	DK

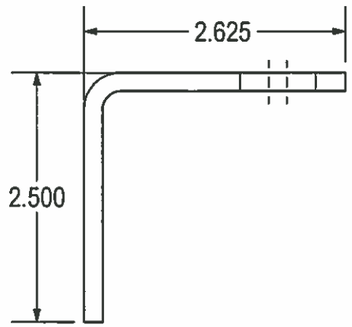

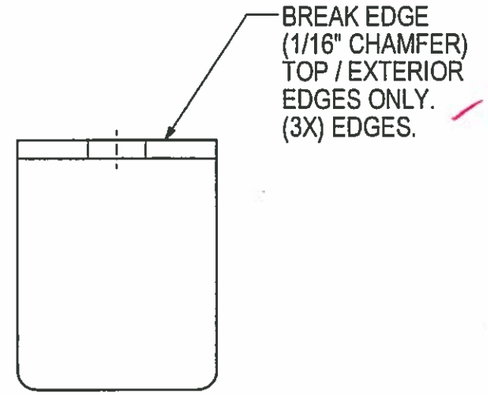

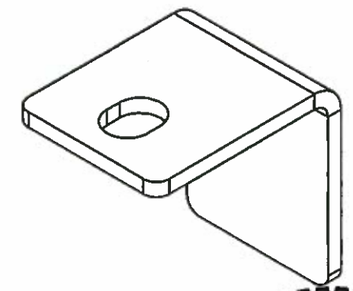

FORMED DETAILS

GERARD G. NAVARRA
STATE OF WASHINGTON
28243
STRUCTURAL ENGINEER
PROFESSIONAL ENGINEER
6/11/15

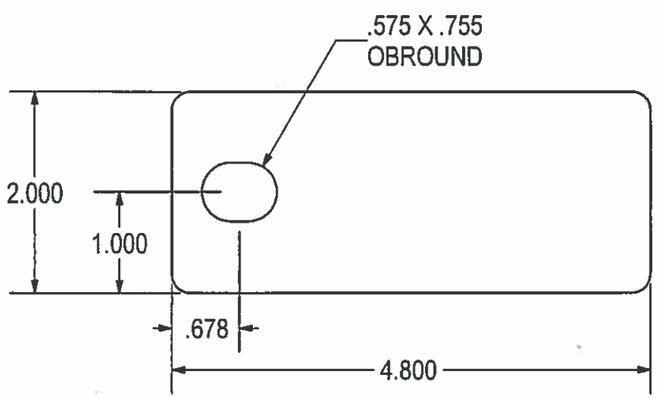

FLAT PATTERN

APPROVED
Washington State
Department of Transportation
HQ Traffic Operations Office
DATE June 17, 2015 TAT

3/16HR - 4.800 X 2.000
X = .325 @ 90° .188 R
(1) REQ'D

THIS DRAWING CREATED FOR MANUFACTURING REFERENCE ONLY AND IS NOT INTENDED TO SUPERCEDE H² PRECAST INC. DRAWINGS OR SPECIFICATIONS OF THE REFERENCED PART.

Prepared for H² PRECAST INC.				
LATCH HOUSING				
HOLES ± 0.030 X.XXX ± 0.060 ANGLES ± 1.0°	SIZE A	DRAWN BY: DREW KEIM	PROGRAM NUMBER: 716-L001 DATE CREATED: 5/21/12	REV. A
	SCALE: NONE	CAD FILE: 716-L001A		SHEET 1 of 1

THE INFORMATION CONTAINED IN THIS DRAWING IS THE SOLE PROPERTY OF H² PRECAST INC. ANY REPRODUCTION IN PART OR WHOLE WITHOUT THE WRITTEN PERMISSION OF FM&M IS PROHIBITED.

This assembly is constructed and tested to conform with WSDOT Standard Specification 9-29.2(2), Standard Duty Junction Boxes.

REV	DESCRIPTION	DATE	INITIALS
A	REDESIGNED, SHORTENED. ADDED SIDE FLANGES.	7/14	DK

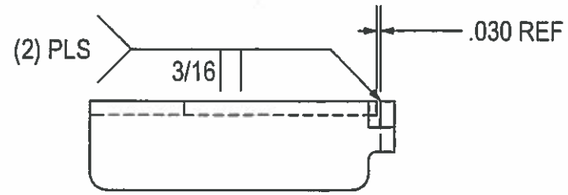

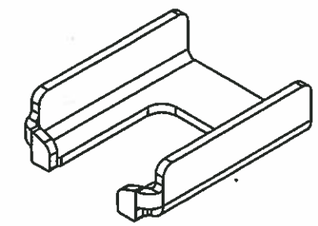

FORMED DETAILS

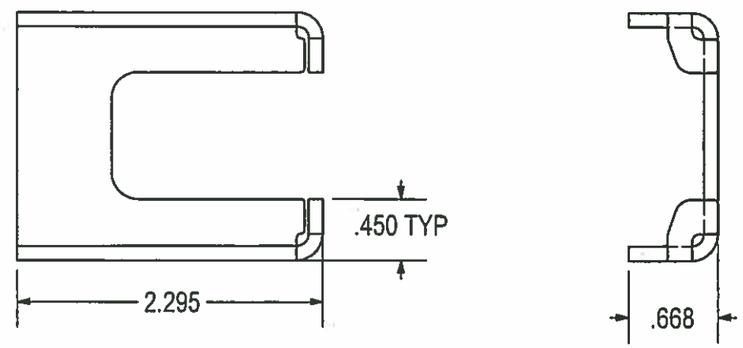

6/11/15

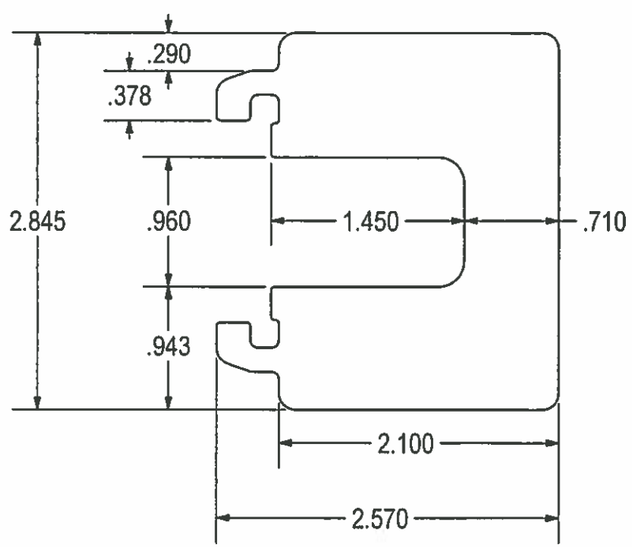

FLAT PATTERN

12 GA HR - 3.095 X 2.570
X = .175 @ 90° .090 R
(1) REQ'D

APPROVED
Washington State
Department of Transportation
HQ Traffic Operations Office
DATE June 17, 2015 TAT

Prepared for H² PRECAST INC.

LATCH GUIDE

THIS DRAWING CREATED FOR MANUFACTURING REFERENCE ONLY AND IS NOT INTENDED TO SUPERCEDE H² PRECAST INC. DRAWINGS OR SPECIFICATIONS OF THE REFERENCED PART.

HOLES ± 0.030 X.XXX ± 0.060 ANGLES ± 1.0°	SIZE A	DRAWN BY: DREW KEIM	PROGRAM NUMBER: DATE CREATED: 5/21/12	716-L004	REV. A
	SCALE: NONE	CAD FILE: 716-L004A		SHEET 1 of 1	

THE INFORMATION CONTAINED IN THIS DRAWING IS THE SOLE PROPERTY OF H² PRECAST INC. ANY REPRODUCTION IN PART OR WHOLE WITHOUT THE WRITTEN PERMISSION OF FM&M IS PROHIBITED.

This assembly is constructed and tested to conform with WSDOT Standard Specification 9-29.2(2), Standard Duty Junction Boxes.

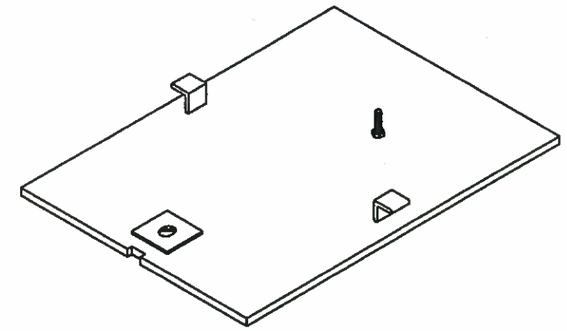

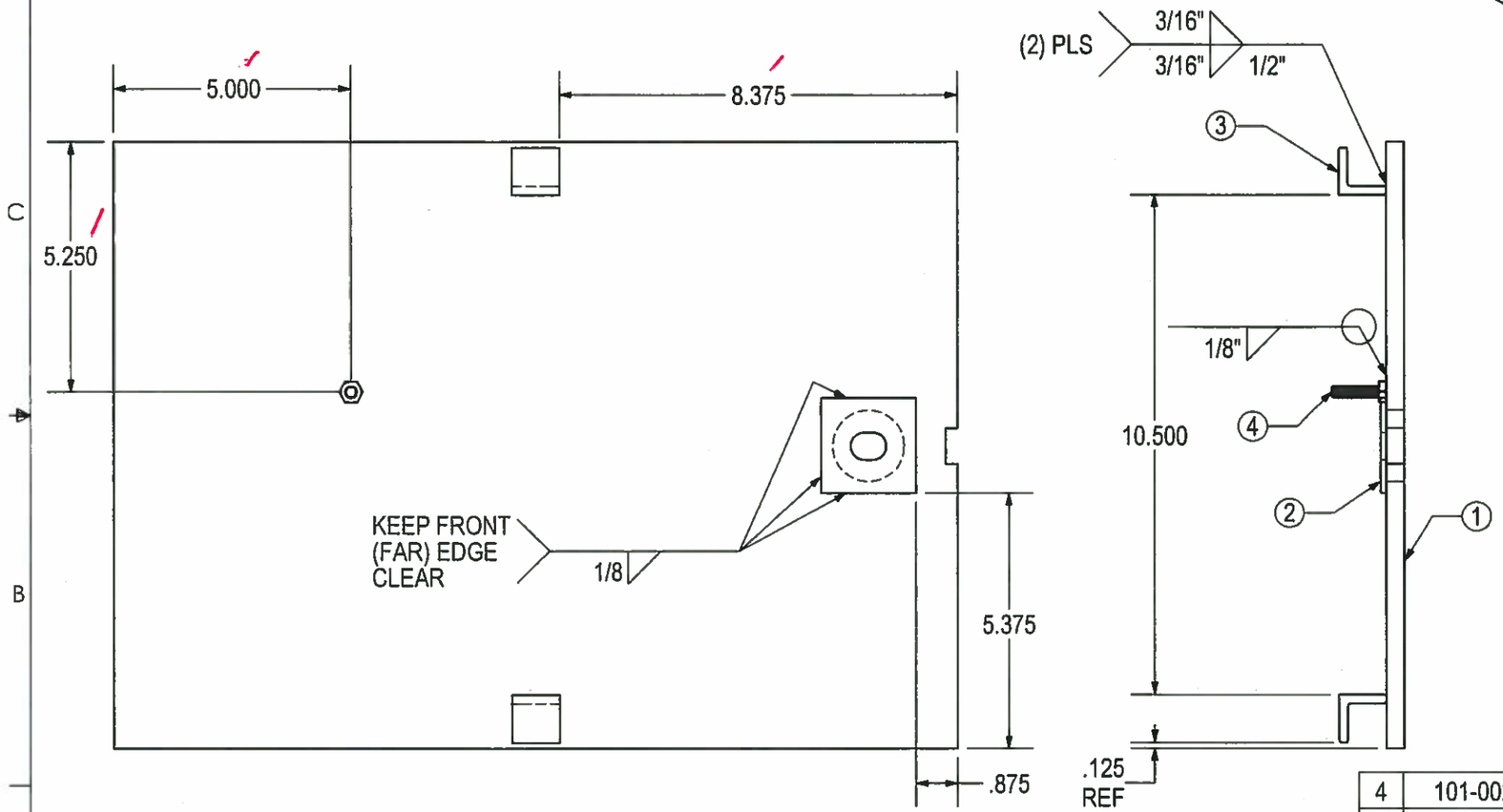

GERARD G. NAVARRA
STATE OF WASHINGTON
28243
STRUCTURAL ENGINEER
PROFESSIONAL ENGINEER
6/11/15

APPROVED
Washington State
Department of Transportation
HQ Traffic Operations Office
DATE June 17, 2015 TAT

#	SKU#	DESCRIPTION	MATERIAL	QTY.
4	101-00272	Ø1/4-20 X 1" HHCS (316SS)	316SS	1
3	211-02163	LID GUIDE / RETAINER	A36HR	2
2	716-L003	LOCK PLATE	A36HR	1
1	716-WSDPT102 716-S0027	LID, TI JBOX WSDOT (DP) LID, TI JBOX WSDOT (SN)	ASTM A786 FP	1

PARTS LIST

UNIVERSAL DRAWING:
700-00001 WSDOT (DP)
700-00031 WSDOT (SN)

Prepared for H² PRECAST INC.

LID WELD ASSY, TYPEI JBOX WSDOT

THIS DRAWING CREATED FOR MANUFACTURING REFERENCE ONLY AND IS NOT INTENDED TO SUPERCEDE H² PRECAST INC. DRAWINGS OR SPECIFICATIONS OF THE REFERENCED PART.

HOLES ± 0.030
X.XXX ± 0.060
ANGLES ± 1.0°

SIZE A | DRAWN BY: DREW KEIM | PROGRAM NUMBER: 700-00001 (DP) 700-00031 (SN) | DATE CREATED: 4/28/14 | REV.

SCALE: NONE | CAD FILE: LID. TI JBOX WSDOT | SHEET 1 of 1

THE INFORMATION CONTAINED IN THIS DRAWING IS THE SOLE PROPERTY OF H² PRECAST INC. ANY REPRODUCTION IN PART OR WHOLE WITHOUT THE WRITTEN PERMISSION OF FM&M IS PROHIBITED.

This assembly is constructed and tested to conform with WSDOT Standard Specification 9-29.2(2), Standard Duty Junction Boxes.

REV	DESCRIPTION	DATE	INITIALS
A	MODIFIED LIFTING NOTCH. 3/4x1/4 RECT WAS 1/2x1/2 OBR.	7/14	DK

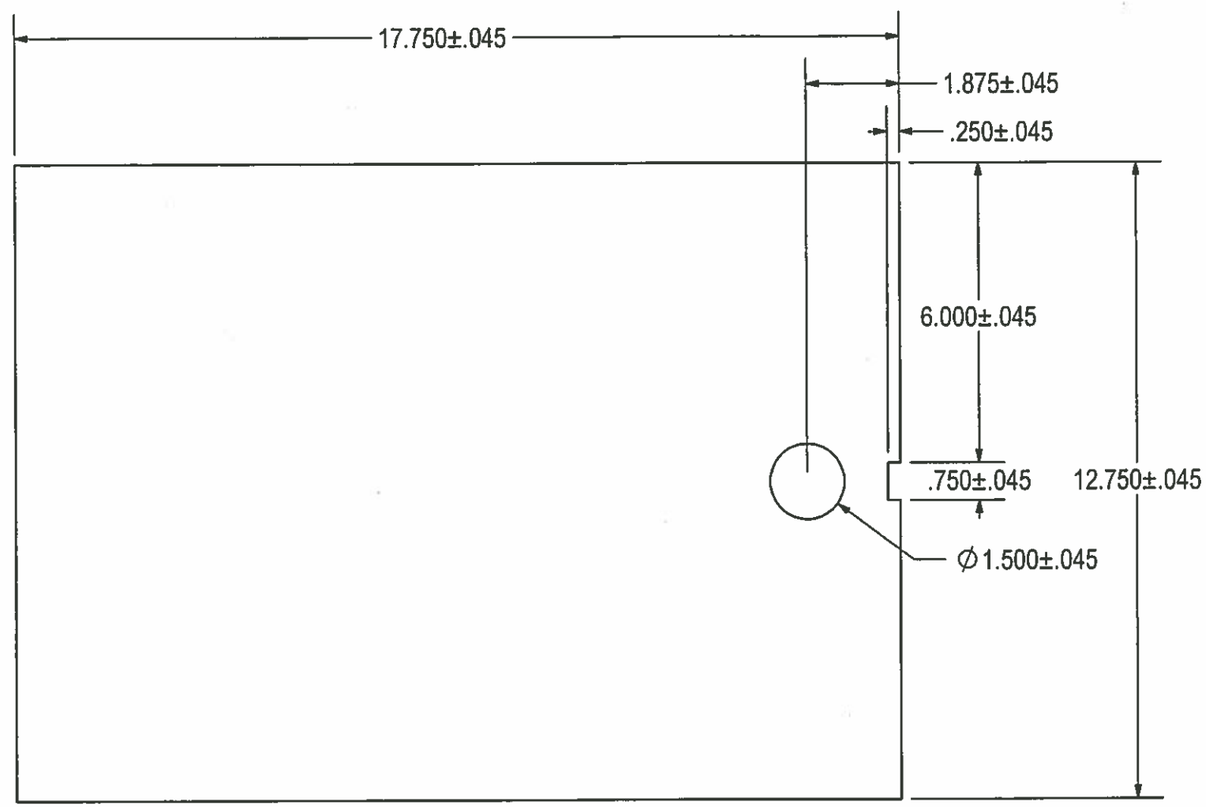

GERARD G. NAVARRA
STATE OF WASHINGTON
28243
STRUCTURAL ENGINEER
PROFESSIONAL ENGINEER
6/11/15

APPROVED
Washington State
Department of Transportation
HQ Traffic Operations Office
DATE June 17, 2015 TAT

3/8 DIAMOND PLATE / SLIPNOT (ASTM A786 FLOOR PLATE)
17.750 X 12.750
(1) REQ'D

UNIVERSAL DWG:
716-WSDOT102 (DP)
716-S0027 (SN)

THIS DRAWING CREATED FOR MANUFACTURING REFERENCE ONLY AND IS NOT INTENDED TO SUPERCEDE H² PRECAST INC. DRAWINGS OR SPECIFICATIONS OF THE REFERENCED PART.

Prepared for H² PRECAST INC.

DOOR W/ LOCK- WSDOT TYPE I J-BOX

SIZE	DRAWN BY:	PROGRAM NUMBER:	REV.
A	DREW KEIM	DATE CREATED: 5/31/12	A
SCALE :NONE	CAD FILE: 716-S0027A	SHEET	OF

THE INFORMATION CONTAINED IN THIS DRAWING IS THE SOLE PROPERTY OF H² PRECAST INC. ANY REPRODUCTION IN PART OR WHOLE WITHOUT THE WRITTEN PERMISSION OF FM&M IS PROHIBITED.

This assembly is constructed and tested to conform with WSDOT Standard Specification 9-29.2(2), Standard Duty Junction Boxes.

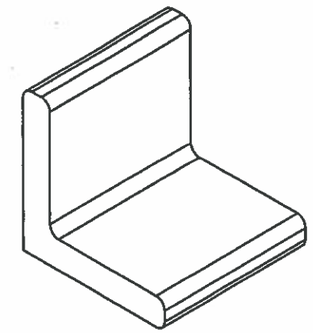

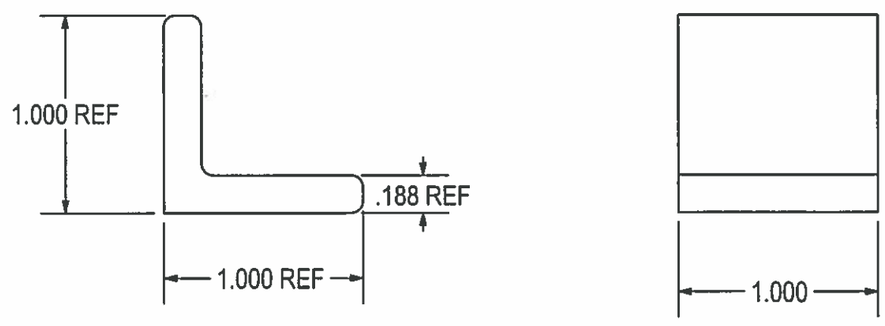

GERARD G. NAVARRA
STATE OF WASHINGTON
28243
STRUCTURAL ENGINEER
PROFESSIONAL ENGINEER
6/11/15

APPROVED
Washington State
Department of Transportation
HQ Traffic Operations Office
DATE June 17, 2015 TAT

ANGLE, 1 x 1 x 3/16 X 1.000 LONG
(2) REQ'D

THIS DRAWING CREATED FOR MANUFACTURING REFERENCE ONLY AND IS NOT INTENDED TO SUPERCEDE H² PRECAST INC. DRAWINGS OR SPECIFICATIONS OF THE REFERENCED PART.

Prepared for H² PRECAST INC.				
LID GUIDE / RETAINER				
HOLES ± 0.030 X.XXX ± 0.060 ANGLES ± 1.0°	SIZE A	DRAWN BY: DREW KEIM	PROGRAM NUMBER: 211-02163 DATE CREATED: 5/7/14	REV.
	SCALE: NONE	CAD FILE: 716-F0056	SHEET 1 of 1	

THE INFORMATION CONTAINED IN THIS DRAWING IS THE SOLE PROPERTY OF H² PRECAST INC. ANY REPRODUCTION IN PART OR WHOLE WITHOUT THE WRITTEN PERMISSION OF FM&M IS PROHIBITED.

This assembly is constructed and tested to conform with WSDOT Standard Specification 9-29.2(2), Standard Duty Junction Boxes.

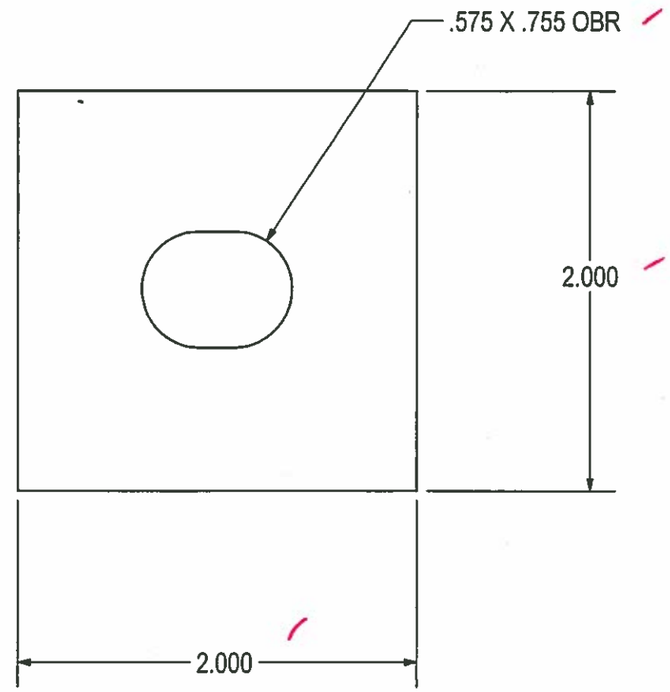

GERARD G. NAVARRA
STATE OF WASHINGTON
28243
STRUCTURAL ENGINEER
PROFESSIONAL ENGINEER
6/11/15

APPROVED
Washington State
Department of Transportation
HQ Traffic Operations Office
DATE June 17, 2015 TAT

1/8 HR - 2.000 X 2.000
(1) REQ'D

THIS DRAWING CREATED FOR MANUFACTURING REFERENCE ONLY AND IS NOT INTENDED TO SUPERCEDE H² PRECAST INC. DRAWINGS OR SPECIFICATIONS OF THE REFERENCED PART.

Prepared for H² PRECAST INC.			
LOCK PLATE			
SIZE A	DRAWN BY: DREW KEIM	PROGRAM NUMBER: 716-L003 DATE CREATED: 5/21/12	REV.
SCALE :NONE	CAD FILE: 716-L003		SHEET 1 of 1

THE INFORMATION CONTAINED IN THIS DRAWING IS THE SOLE PROPERTY OF H² PRECAST INC. ANY REPRODUCTION IN PART OR WHOLE WITHOUT THE WRITTEN PERMISSION OF FM&M IS PROHIBITED.

This assembly is constructed and tested to conform with WSDOT Standard Specification 9-29.2(2), Standard Duty Junction Boxes.

REV	DESCRIPTION	DATE	INITIALS
A	MODIFEID WELD NOTE. ADDED NOTE.	7/14	DK

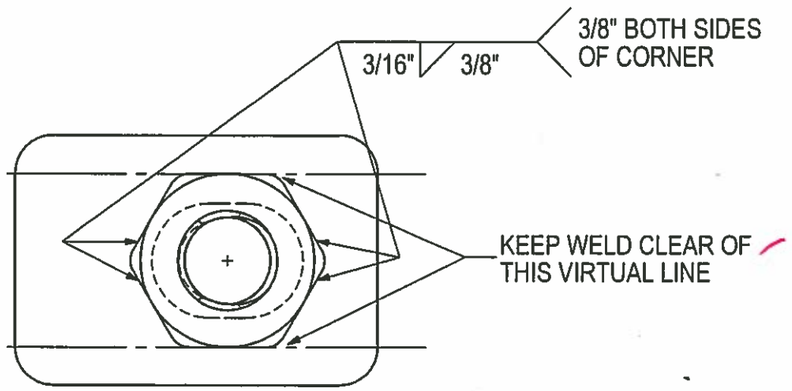

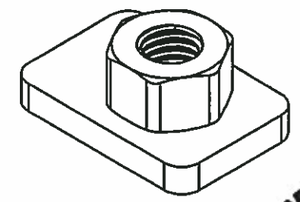

GERARD G. NAVARRA
STATE OF WASHINGTON
28243
STRUCTURAL ENGINEER
PROFESSIONAL ENGINEER
6/11/15

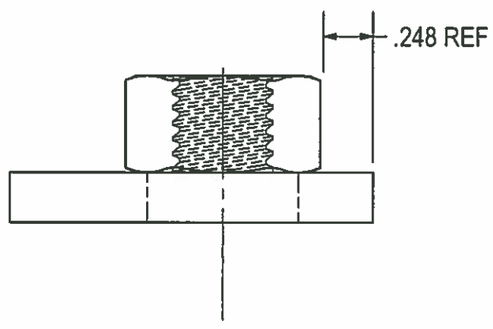

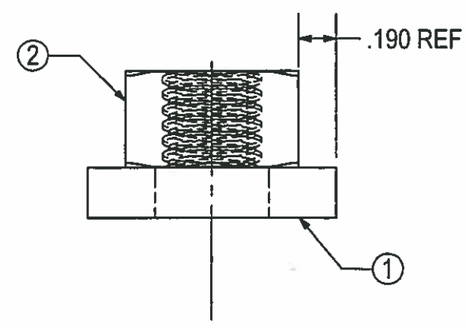

APPROVED
Washington State
Department of Transportation
HQ Traffic Operations Office
DATE June 17, 2015 TAT

#	SKU#	DESCRIPTION	MATERIAL	QTY.
2	101-00047	NUT, HEX(HEAVY) 1/2-13	316SS	1
1	716-L002	LOCK LATCH	A36HR	1

PARTS LIST

Prepared for H² PRECAST INC.

LOCK TAB WELD ASSY

THIS DRAWING CREATED FOR MANUFACTURING REFERENCE ONLY AND IS NOT INTENDED TO SUPERCEDE H² PRECAST INC. DRAWINGS OR SPECIFICATIONS OF THE REFERENCED PART.

HOLES ± 0.030
X.XXX ± 0.060
ANGLES ± 1.0°

SIZE A | DRAWN BY: DREW KEIM | PROGRAM NUMBER: 700-00005 | DATE CREATED: 4/28/14 | REV. A

SCALE: NONE | CAD FILE: 700-00005A | SHEET 1 of 1

THE INFORMATION CONTAINED IN THIS DRAWING IS THE SOLE PROPERTY OF H² PRECAST INC. ANY REPRODUCTION IN PART OR WHOLE WITHOUT THE WRITTEN PERMISSION OF FM&M IS PROHIBITED.

This assembly is constructed and tested to conform with WSDOT Standard Specification 9-29.2(2), Standard Duty Junction Boxes.

REV	DESCRIPTION	DATE	INITIALS
A	1/4" HR WAS 3/8" HR	'14	DK

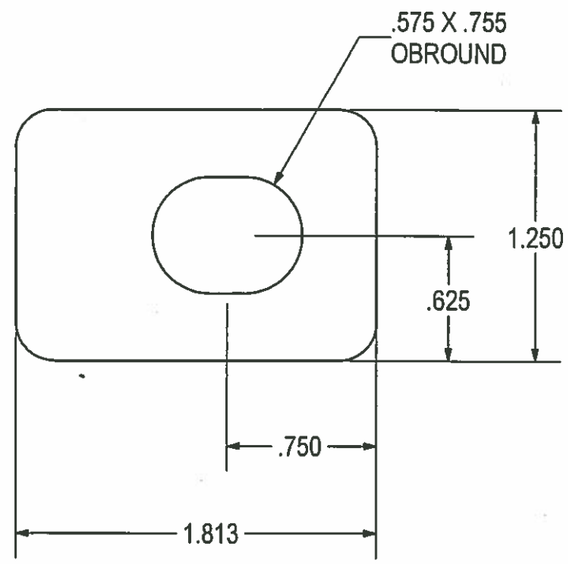

GERARD G. NAVARRA
STATE OF WASHINGTON
28243
STRUCTURAL ENGINEER
PROFESSIONAL ENGINEER
6/11/15

APPROVED
Washington State
Department of Transportation
HQ Traffic Operations Office
DATE June 17, 2015 TAT

1/4 HR - 1.813 X 1.250
(1) REQ'D

THIS DRAWING CREATED FOR MANUFACTURING REFERENCE ONLY AND IS NOT INTENDED TO SUPERCEDE H² PRECAST INC. DRAWINGS OR SPECIFICATIONS OF THE REFERENCED PART.

HOLES ± 0.030
X.XXX ± 0.060
ANGLES ± 1.0°

Prepared for H² PRECAST INC.

LOCK LATCH

SIZE	DRAWN BY:	PROGRAM NUMBER:	716-L002	REV.
A	DREW KEIM	DATE CREATED: 5/21/12		A

SCALE :NONE | CAD FILE: 716-L002A | SHEET 1 of 1