H² PRE-CAST INC.
CONCRETE PRODUCTS

JUNCTION BOX - TYPE 8

ELECTRIC

CHECK REQUIRED SPECIFICATION	
	STANDARD
	WSDOT / STATE CONTRACT NUMBER _____
	SLIPNOT
	GALVANIZED DIAMOND PLATE
	BLACK

GENERAL NOTES:
LID TO BE TRAVIS INDUSTRIES PRODUCT, PART NUMBERS:
716-T802 - DIAMOND PLATE
716S0032 - SLIPNOT
FRAME PART #
716-T801 - DIAMOND PLATE
716-S0031 - SLIPNOT
CONCRETE w/FIBERMESH REINFORCING
f'c=4000 psi @28 days

lid & frame shall be hot-dip galvanized per 9-29.2(1)A

GERARD G. NAVARRA
STATE OF WASHINGTON
28243
STRUCTURAL ENGINEER
PROFESSIONAL ENGINEER
6/11/15

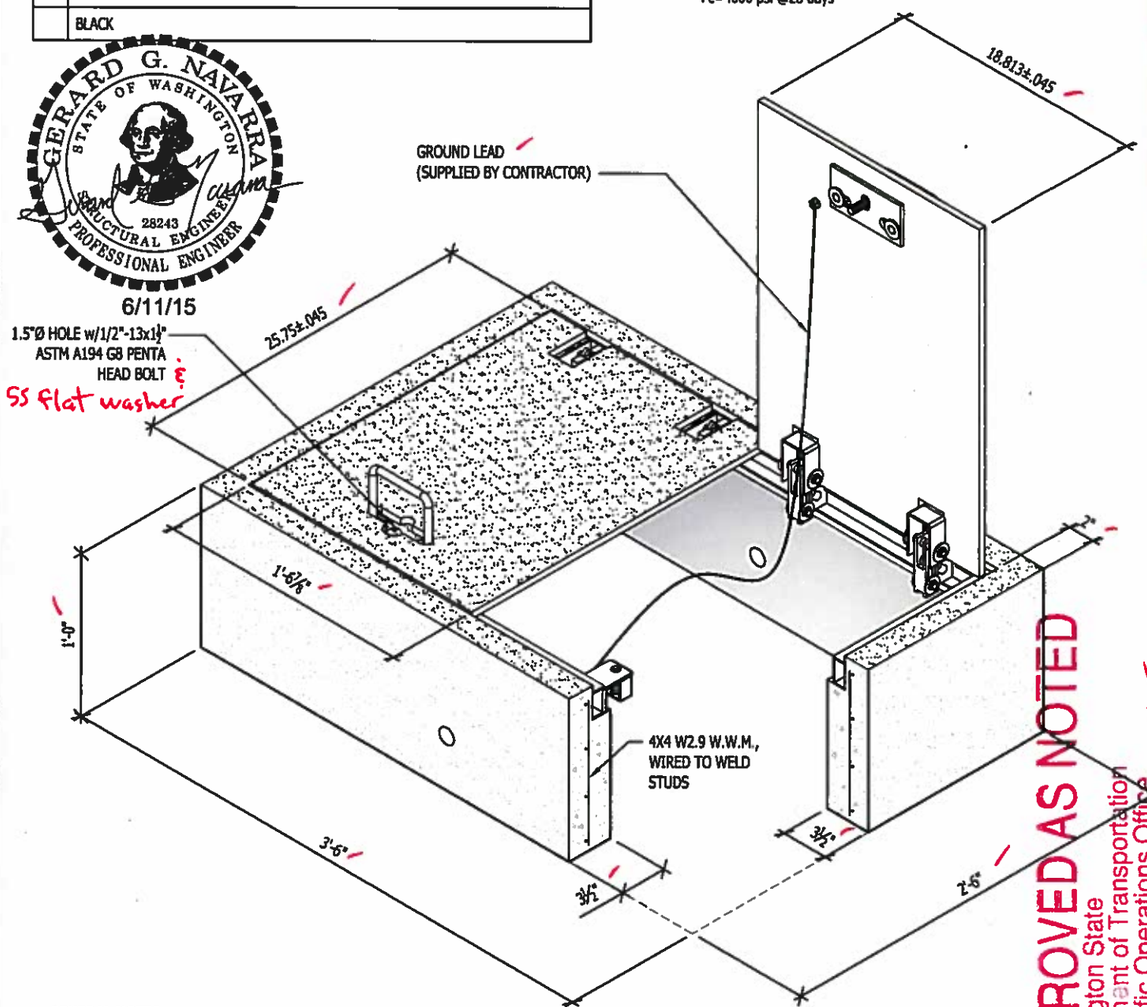

GENERAL NOTES:
THIS ASSEMBLY IS CONSTRUCTED AND TESTED TO CONFORM WITH WSDOT STANDARD SPECIFICATION 9-29.2(2), STANDARD DUTY JUNCTION BOXES

APPROVED AS NOTED
Washington State
Department of Transportation
HQ Traffic Operations Office
DATE June 17, 2015 TAT

H² Pre-Cast Inc.
3835 N. Clemons
East Wenatchee, WA

Phone: (509) 884-6644
Fax: (509) 884-4567
Web: www.h2precast.com

© 2007 H² Pre-Cast Inc.

THE INFORMATION CONTAINED IN THIS DRAWING IS THE SOLE PROPERTY OF H² PRECAST INC. ANY REPRODUCTION IN PART OR WHOLE WITHOUT THE WRITTEN PERMISSION OF FM&M IS PROHIBITED.

This assembly is constructed and tested to conform with WSDOT Standard Specification 9-29.2(2), Standard Duty Junction Boxes.

REV	DESCRIPTION	DATE	INITIALS
A	ADDED PART MAT'L INFO TO BOM.	5/23/14	DK

GERARD G. NAVARRA
STATE OF WASHINGTON
28243
STRUCTURAL ENGINEER
PROFESSIONAL ENGINEER
6/11/15

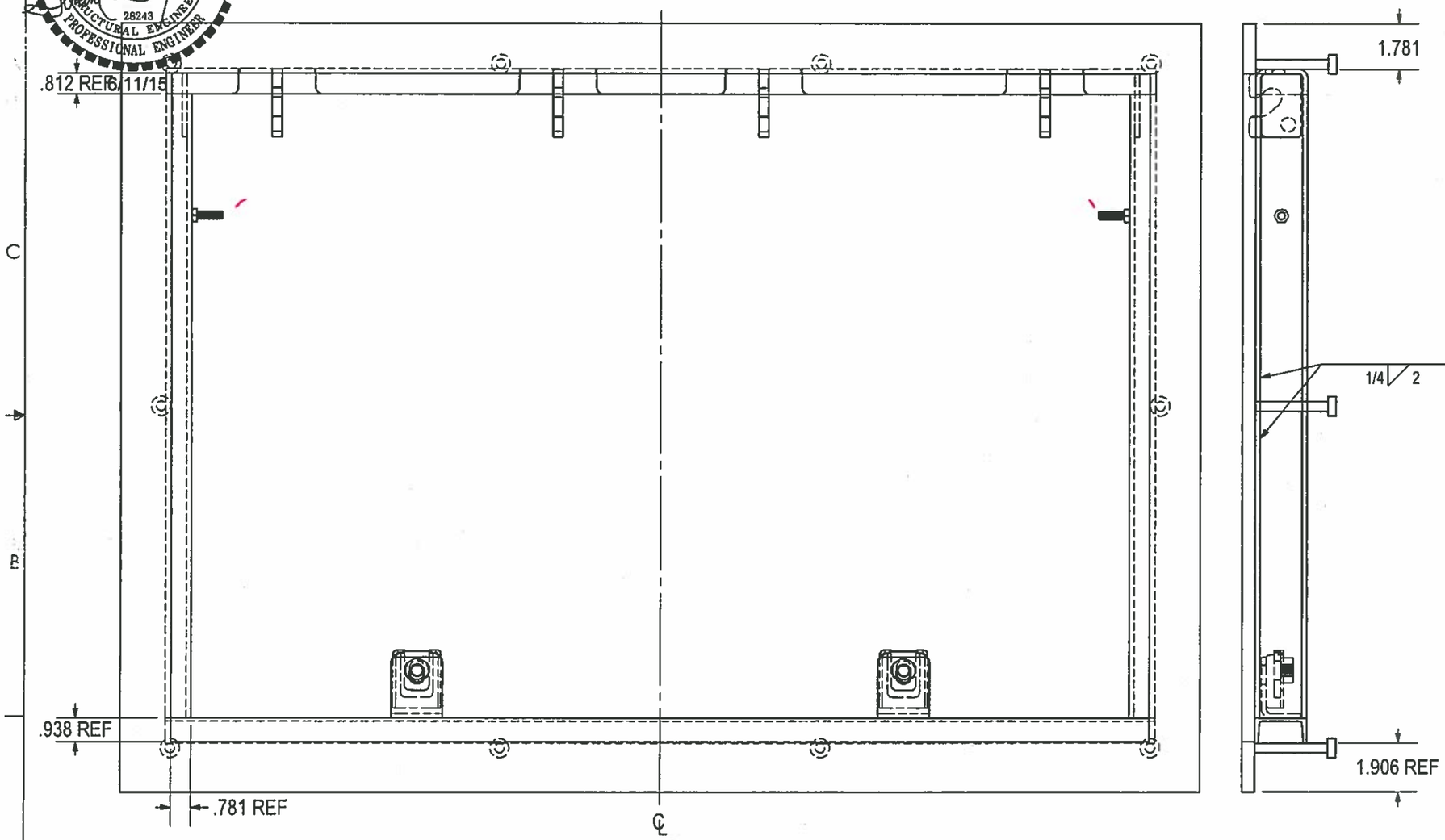

APPROVED
Washington State
Department of Transportation
HQ Traffic Operations Office
DATE June 17, 2018 TAT

TYPE 8 - FRAME POSITION

UNIVERSAL DWG:
716-00006 T8 JBOX (DP)
716-00014 T8 JBOX (SN)

Prepared for H² PRECAST INC.

TYPE 8 JUNCTION BOX

THIS DRAWING CREATED FOR MANUFACTURING REFERENCE ONLY AND IS NOT INTENDED TO SUPERCEDE H² PRECAST INC. DRAWINGS OR SPECIFICATIONS OF THE REFERENCED PART.

HOLES ± 0.030
X.XXX ± 0.060
ANGLES ± 1.0°

SIZE A | DRAWN BY: DREW KEIM | PROGRAM NUMBER: | DATE CREATED: 7/26/12 | REV. A
SCALE :NONE | CAD FILE: TYPE 8 J BOX (A) | SHEET 2 of 2

THE INFORMATION CONTAINED IN THIS DRAWING IS THE SOLE PROPERTY OF H² PRECAST INC. ANY REPRODUCTION IN PART OR WHOLE WITHOUT THE WRITTEN PERMISSION OF FM&M IS PROHIBITED.

This assembly is constructed and tested to conform with WSDOT Standard Specification 9-29.2(2), Standard Duty Junction Boxes.

REV	DESCRIPTION	DATE	INITIALS
A	ADDED PART MAT'L INFO TO BOM. MOD WELD CALLOUTS. MOVED TAB GUIDE.	5/23/14	DK

GERARD G. NAVARRA
STATE OF WASHINGTON
28243
STRUCTURAL ENGINEER
PROFESSIONAL ENGINEER
6/11/15

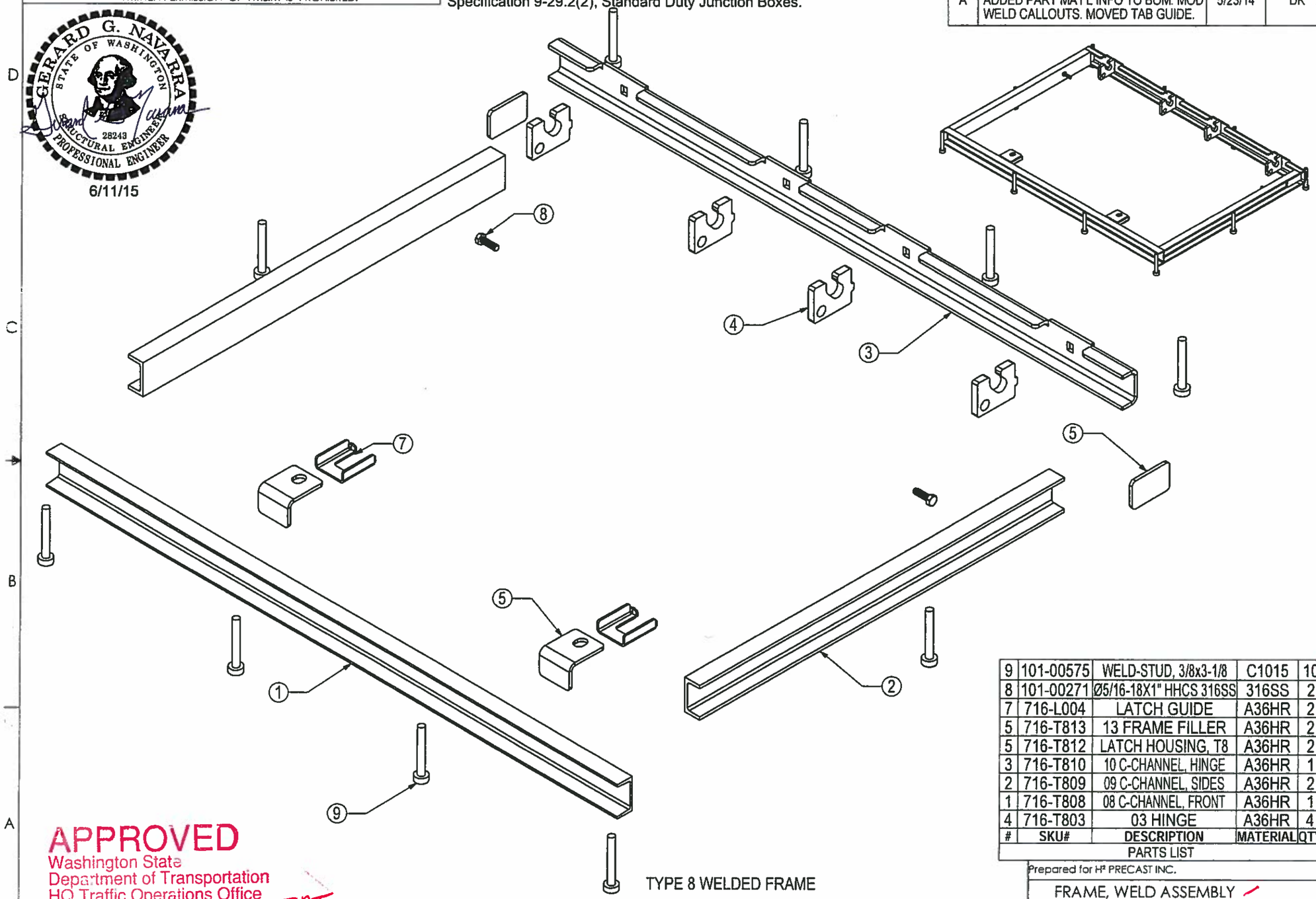

#	SKU#	DESCRIPTION	MATERIAL	QTY
9	101-00575	WELD-STUD, 3/8x3-1/8	C1015	10
8	101-00271	Ø5/16-18X1" HHCS 316SS	316SS	2
7	716-L004	LATCH GUIDE	A36HR	2
5	716-T813	13 FRAME FILLER	A36HR	2
5	716-T812	LATCH HOUSING, T8	A36HR	2
3	716-T810	10 C-CHANNEL, HINGE	A36HR	1
2	716-T809	09 C-CHANNEL, SIDES	A36HR	2
1	716-T808	08 C-CHANNEL, FRONT	A36HR	1
4	716-T803	03 HINGE	A36HR	4

PARTS LIST

APPROVED
Washington State
Department of Transportation
HQ Traffic Operations Office
DATE June 17, 2015 TAT

TYPE 8 WELDED FRAME

THIS DRAWING CREATED FOR MANUFACTURING REFERENCE ONLY AND IS NOT INTENDED TO SUPERCEDE H² PRECAST INC. DRAWINGS OR SPECIFICATIONS OF THE REFERENCED PART.

Prepared for H² PRECAST INC.

FRAME, WELD ASSEMBLY

SIZE	DRAWN BY:	PROGRAM NUMBER:	REV.
A	DREW KEIM	DATE CREATED: 8/27/12	A
SCALE :NONE	CAD FILE: WELDED FRAME (A)	SHEET 1 of 3	

THE INFORMATION CONTAINED IN THIS DRAWING IS THE SOLE PROPERTY OF H² PRECAST INC. ANY REPRODUCTION IN PART OR WHOLE WITHOUT THE WRITTEN PERMISSION OF FM&M IS PROHIBITED.

This assembly is constructed and tested to conform with WSDOT Standard Specification 9-29.2(2), Standard Duty Junction Boxes.

REV	DESCRIPTION	DATE	INITIALS
A	ADDED PART MAT'L INFO TO BOM. MOD WELD CALLOUTS. MOVED TAB GUIDE.	5/23/14	DK

GERARD G. NAVARRA
STATE OF WASHINGTON
28243
STRUCTURAL ENGINEER
PROFESSIONAL ENGINEER
6/11/15

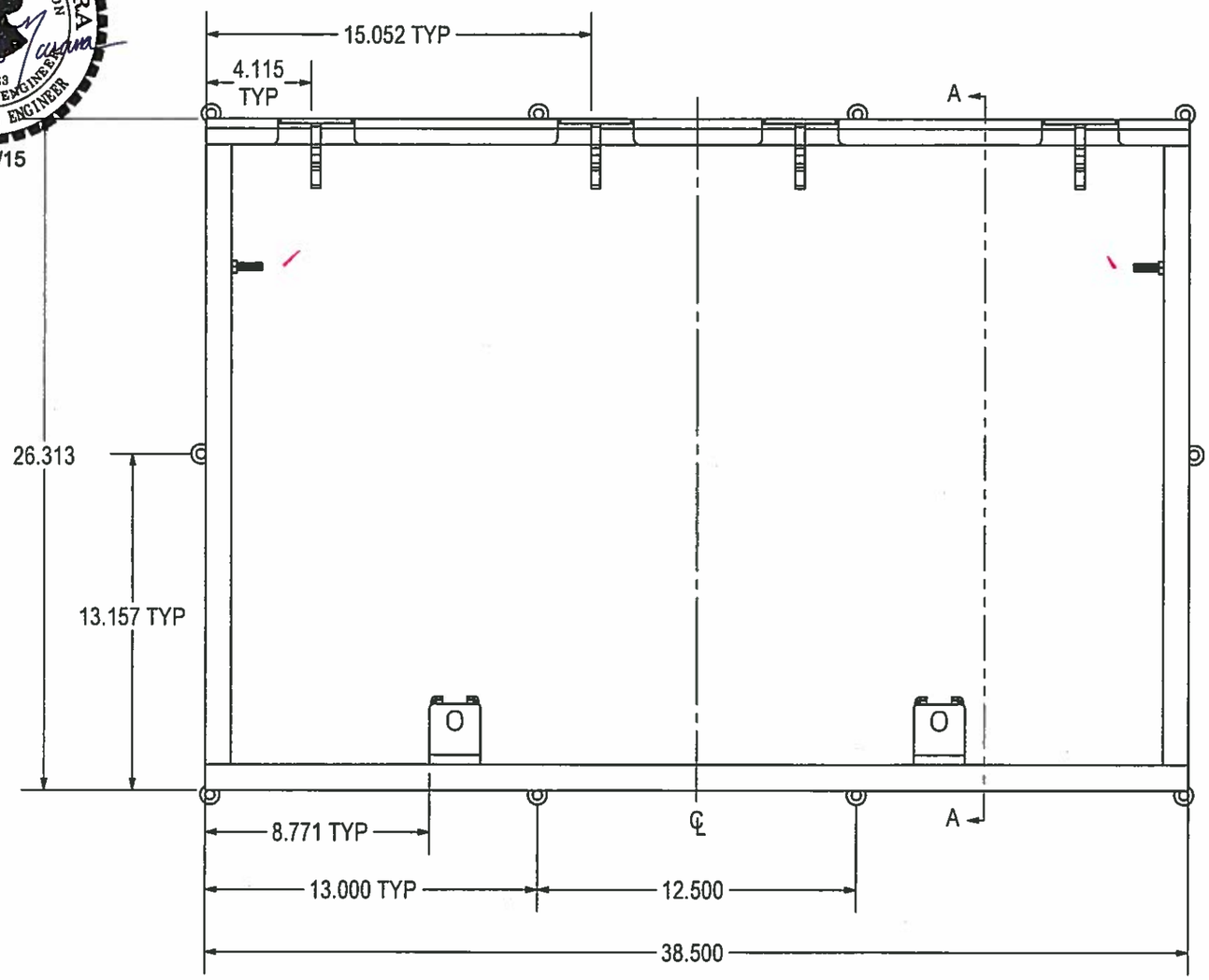

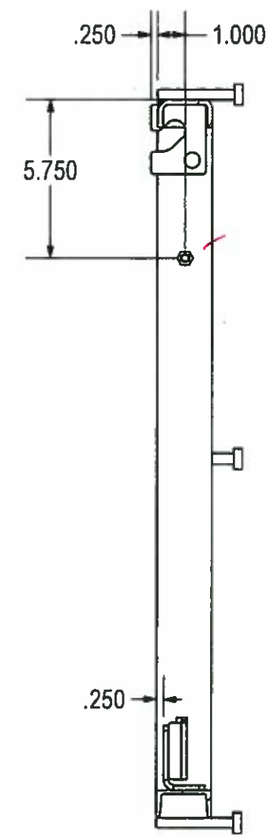

SECTION A-A

TYPE 8 WELDED FRAME

APPROVED
Washington State
Department of Transportation
HQ Traffic Operations Office
DATE June 17, 2015 TAT

THIS DRAWING CREATED FOR MANUFACTURING REFERENCE ONLY AND IS NOT INTENDED TO SUPERCEDE H² PRECAST INC. DRAWINGS OR SPECIFICATIONS OF THE REFERENCED PART.

Prepared for H² PRECAST INC.

FRAME, WELD ASSEMBLY

SIZE	DRAWN BY:	PROGRAM NUMBER:	REV.
A	DREW KEIM	DATE CREATED: 8/27/12	A
SCALE :NONE	CAD FILE: WELDED FRAME (A)	SHEET 2 of 3	

THE INFORMATION CONTAINED IN THIS DRAWING IS THE SOLE PROPERTY OF H² PRECAST INC. ANY REPRODUCTION IN PART OR WHOLE WITHOUT THE WRITTEN PERMISSION OF FM&M IS PROHIBITED.

This assembly is constructed and tested to conform with WSDOT Standard Specification 9-29.2(2), Standard Duty Junction Boxes.

REV	DESCRIPTION	DATE	INITIALS
A	ADDED PART MAT'L INFO TO BOM. MOD WELD CALLOUTS. MOVED TAB GUIDE.	5/23/14	DK

GERARD G. NAVARRA
STATE OF WASHINGTON
28243
STRUCTURAL ENGINEER
PROFESSIONAL ENGINEER
6/11/15

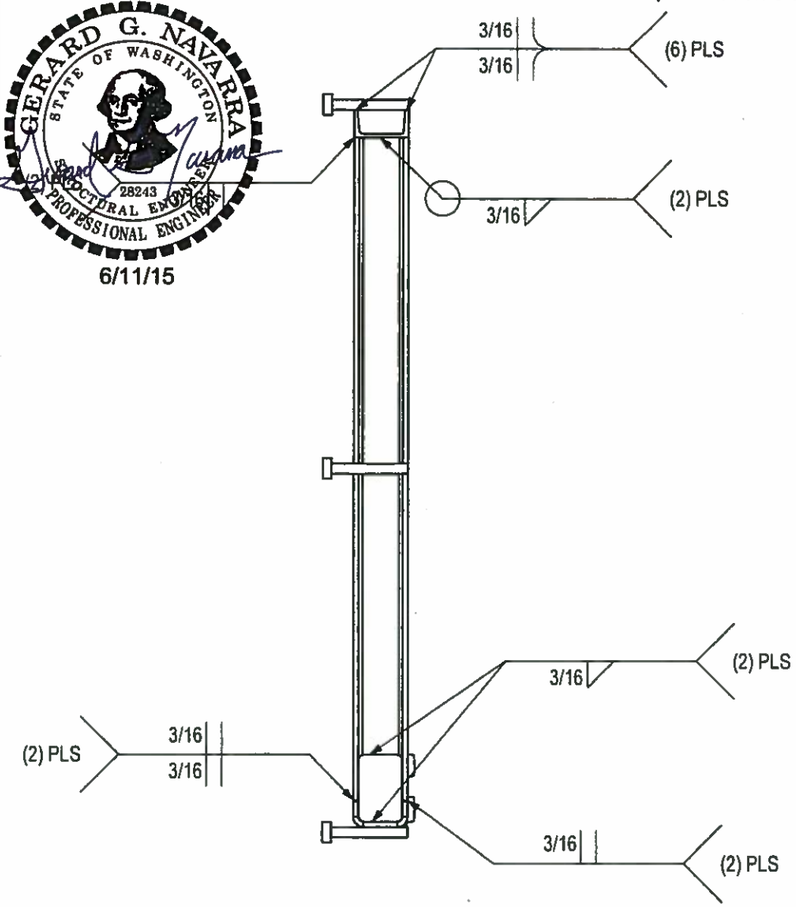

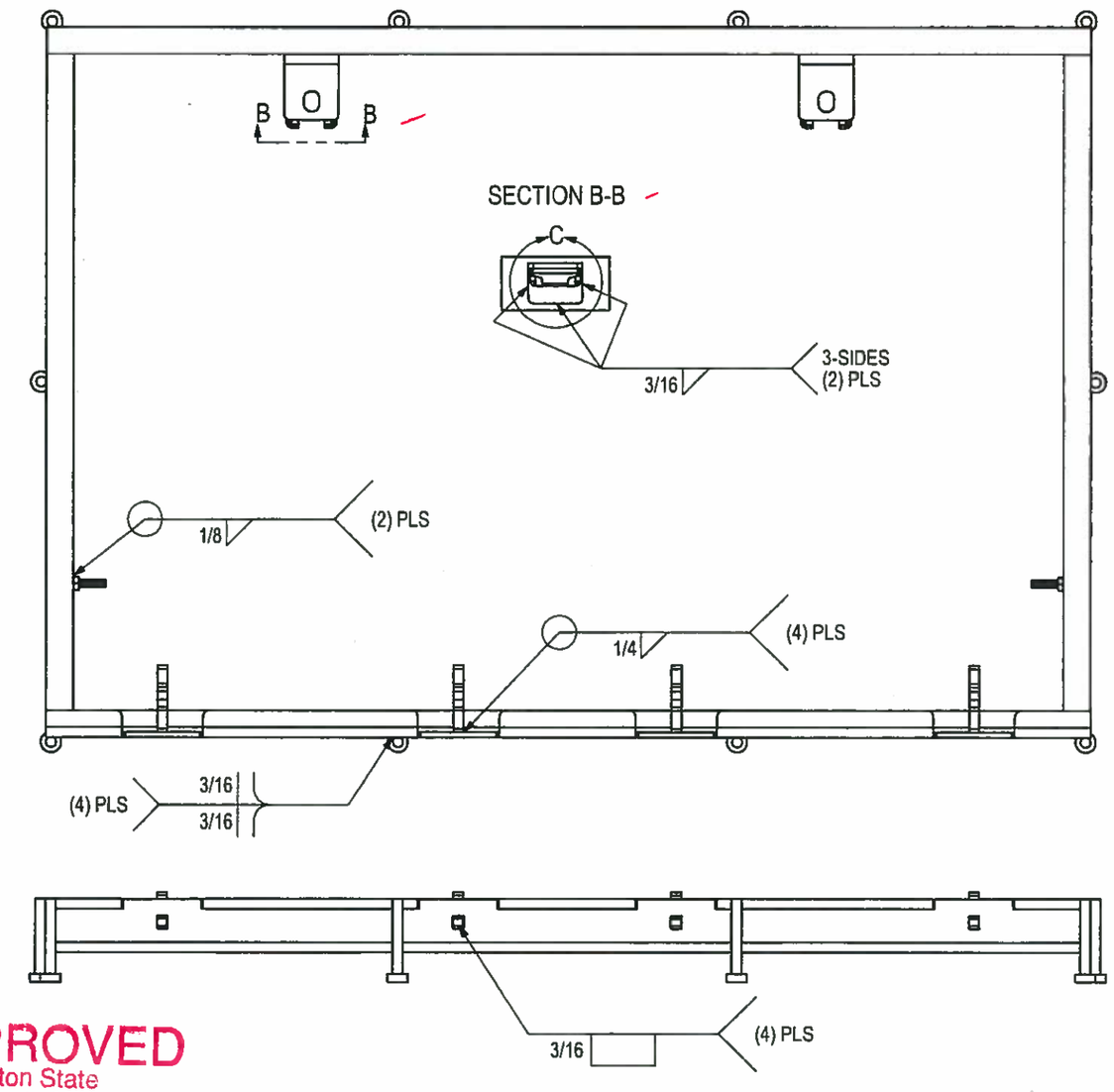

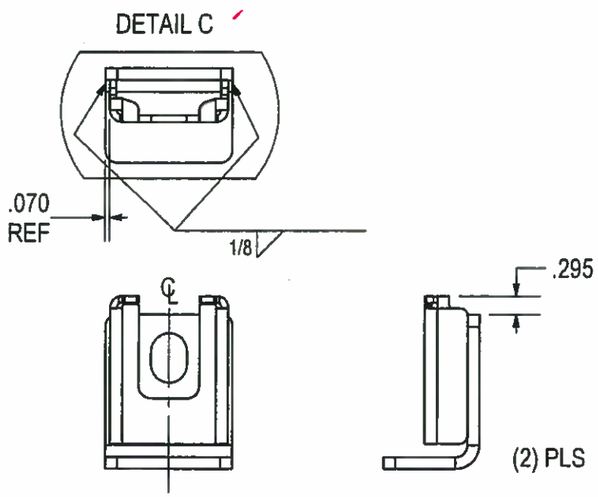

APPROVED
Washington State
Department of Transportation
HQ Traffic Operations Office
DATE June 17, 2015 TAT

TYPE 8 WELDED FRAME - WELD LOCATIONS

THIS DRAWING CREATED FOR MANUFACTURING REFERENCE ONLY AND IS NOT INTENDED TO SUPERCEDE H² PRECAST INC. DRAWINGS OR SPECIFICATIONS OF THE REFERENCED PART.

Prepared for H² PRECAST INC.

FRAME, WELD ASSEMBLY

SIZE	DRAWN BY:	PROGRAM NUMBER:	REV.
A	DREW KEIM	DATE CREATED: 8/27/12	A
SCALE :NONE	CAD FILE: WELDED FRAME (A)	SHEET 3 of 3	

THE INFORMATION CONTAINED IN THIS DRAWING IS THE SOLE PROPERTY OF H² PRECAST INC. ANY REPRODUCTION IN PART OR WHOLE WITHOUT THE WRITTEN PERMISSION OF FM&M IS PROHIBITED.

This assembly is constructed and tested to conform with WSDOT Standard Specification 9-29.2(2), Standard Duty Junction Boxes.

REV	DESCRIPTION	DATE	INITIALS
A	ADDED PART MAT'L INFO TO BOM. MOD WELD CALLOUTS.	5/23/14	DK

GERARD G. NAVARRA
STATE OF WASHINGTON
28243
STRUCTURAL ENGINEER
PROFESSIONAL ENGINEER
6/11/15

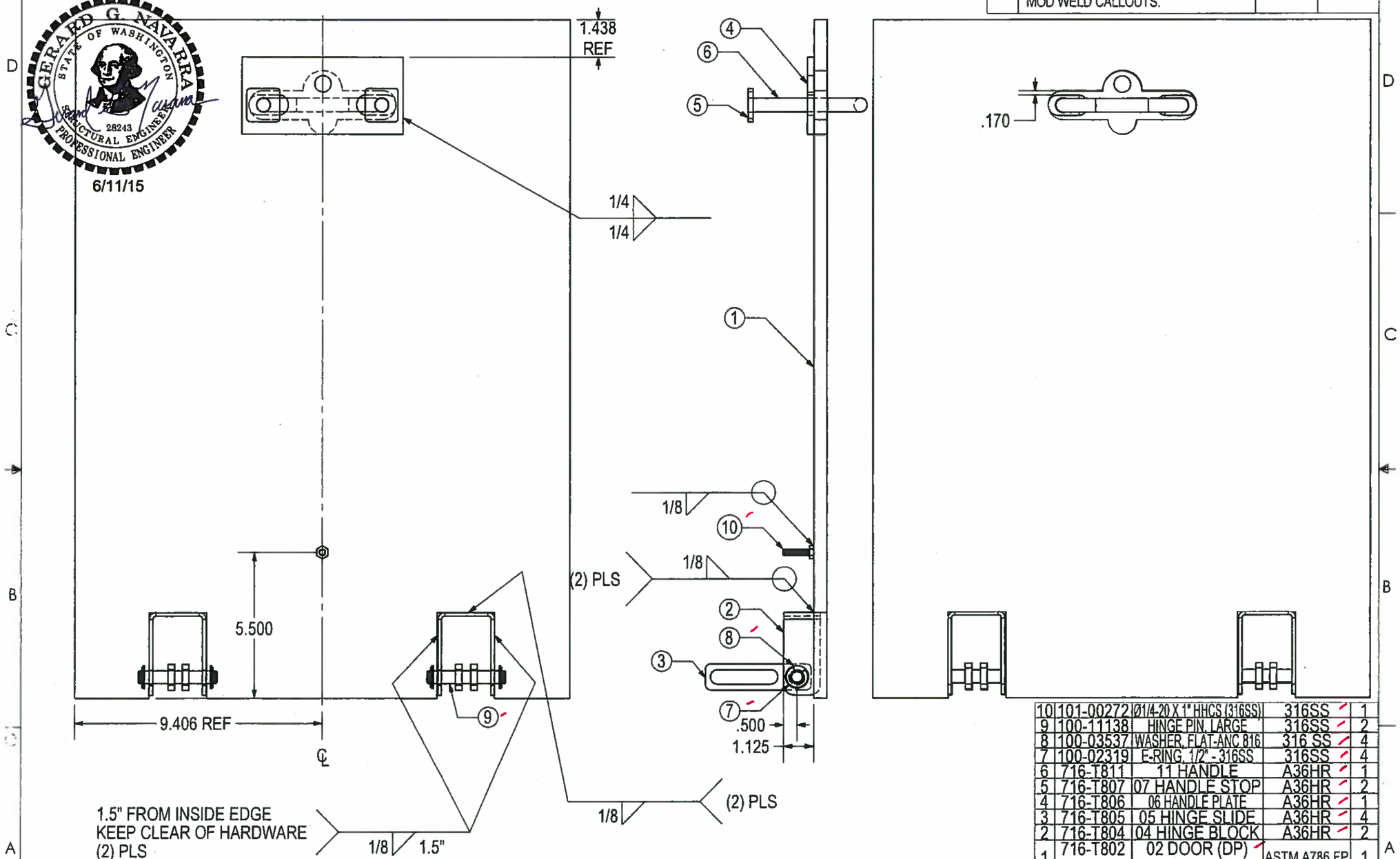

#	SKU#	DESCRIPTION	MATERIAL	QTY
10	101-00272	Ø1/4-20 X 1" HHCS (316SS)	316SS	1
9	100-11138	HINGE PIN, LARGE	316SS	2
8	100-03537	WASHER, FLAT-ANC 816	316 SS	4
7	100-02319	E-RING, 1/2" - 316SS	316SS	4
6	716-T811	11 HANDLE	A36HR	1
5	716-T807	07 HANDLE STOP	A36HR	2
4	716-T806	06 HANDLE PLATE	A36HR	1
3	716-T805	05 HINGE SLIDE	A36HR	4
2	716-T804	04 HINGE BLOCK	A36HR	2
1	716-T802 716-S0032	02 DOOR (DP) 02 DOOR (SN)	ASTM A786 FP	1

PARTS LIST

APPROVED
Washington State
Department of Transportation
HQ Traffic Operations Office
DATE June 17, 2015 TAT

TYPE 8 DOOR WELD ASSY
(2) REQ'D

UNIVERSAL DWG:
700-00018 DP DOOR
700-00036 SN DOOR

THIS DRAWING CREATED FOR MANUFACTURING REFERENCE ONLY AND IS NOT INTENDED TO SUPERCEDE H² PRECAST INC. DRAWINGS OR SPECIFICATIONS OF THE REFERENCED PART.

Prepared for H² PRECAST INC.

DOOR, TYPE 8

SIZE	DRAWN BY:	PROGRAM NUMBER:	REV.
A	DREW KEIM	DATE CREATED: 8/29/12	A

SCALE :NONE | CAD FILE: TYPE 8 DOOR (A) | SHEET 1 of 3

THE INFORMATION CONTAINED IN THIS DRAWING IS THE SOLE PROPERTY OF H² PRECAST INC. ANY REPRODUCTION IN PART OR WHOLE WITHOUT THE WRITTEN PERMISSION OF FM&M IS PROHIBITED.

This assembly is constructed and tested to conform with WSDOT Standard Specification 9-29.2(2), Standard Duty Junction Boxes.

REV	DESCRIPTION	DATE	INITIALS
A	ADDED PART MAT'L INFO TO BOM. MOD WELD CALLOUTS.	5/23/14	DK

GERARD G. NAVARRA
STATE OF WASHINGTON
28243
STRUCTURAL ENGINEER
PROFESSIONAL ENGINEER

6/11/15

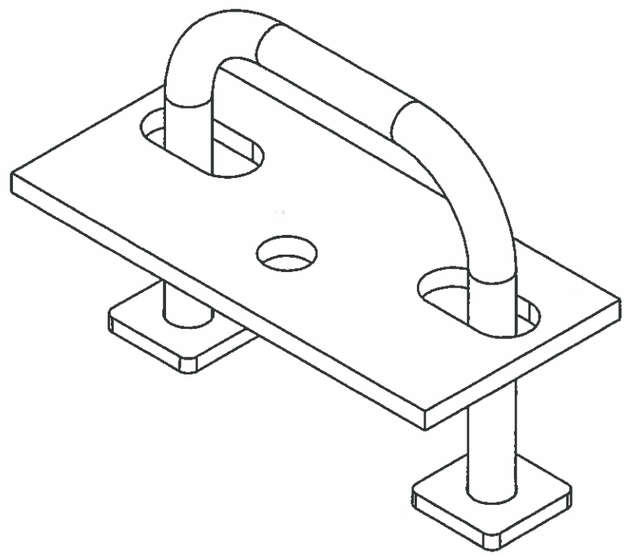

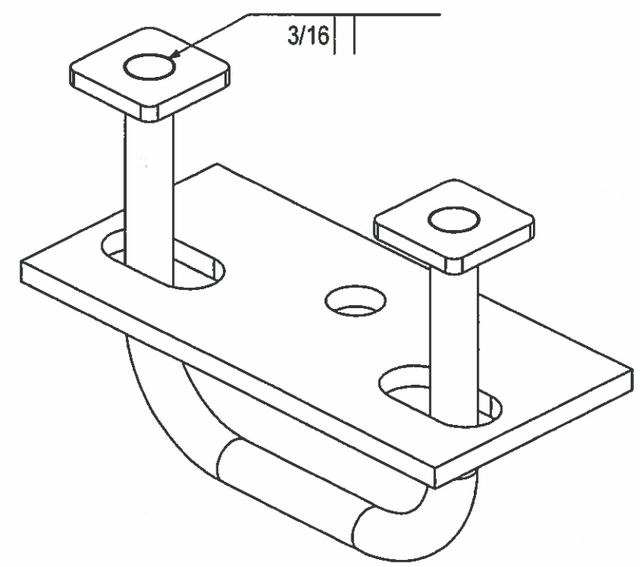

APPROVED
Washington State
Department of Transportation
HQ Traffic Operations Office
DATE June 17, 2015 TAT

TYPE 8 HANDLE WELD ASSY
(2) REQ'D

THIS DRAWING CREATED FOR MANUFACTURING REFERENCE ONLY AND IS NOT INTENDED TO SUPERCEDE H² PRECAST INC. DRAWINGS OR SPECIFICATIONS OF THE REFERENCED PART.

Prepared for H² PRECAST INC.

DOOR, TYPE 8

SIZE	DRAWN BY:	PROGRAM NUMBER:	REV.
A	DREW KEIM	DATE CREATED: 8/29/12	A
SCALE :NONE	CAD FILE: TYPE 8 DOOR (A)	SHEET 2 of 3	

THE INFORMATION CONTAINED IN THIS DRAWING IS THE SOLE PROPERTY OF H² PRECAST INC. ANY REPRODUCTION IN PART OR WHOLE WITHOUT THE WRITTEN PERMISSION OF FM&M IS PROHIBITED.

This assembly is constructed and tested to conform with WSDOT Standard Specification 9-29.2(2), Standard Duty Junction Boxes.

REV	DESCRIPTION	DATE	INITIALS
A	ADDED PART MAT'L INFO TO BOM. MOD WELD CALLOUTS.	5/23/14	DK

GERARD G. NAVARRA
STATE OF WASHINGTON
28243
STRUCTURAL ENGINEER
PROFESSIONAL ENGINEER
6/11/15

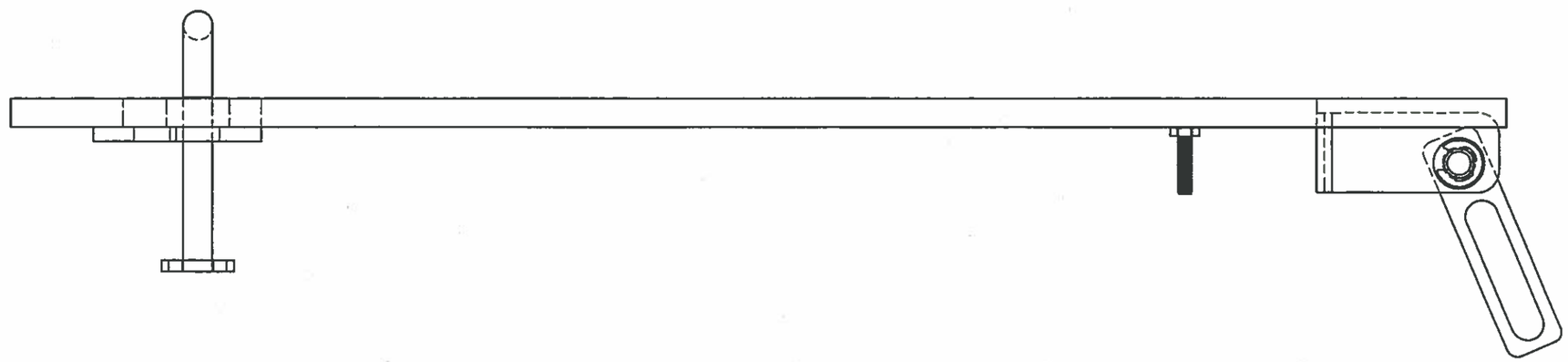

TYPE 8 DOOR ASS'Y - HINGE SLIDE ORIENTATION

APPROVED
Washington State
Department of Transportation
HQ Traffic Operations Office
DATE June 17, 2015 TAT

THIS DRAWING CREATED FOR MANUFACTURING REFERENCE ONLY AND IS NOT INTENDED TO SUPERCEDE H² PRECAST INC. DRAWINGS OR SPECIFICATIONS OF THE REFERENCED PART.

Prepared for H² PRECAST INC.

DOOR, TYPE 8

SIZE	DRAWN BY:	PROGRAM NUMBER:	REV.
A	DREW KEIM	DATE CREATED: 8/29/12	A
SCALE :NONE	CAD FILE: TYPE 8 DOOR (A)	SHEET 3 of 3	

THE INFORMATION CONTAINED IN THIS DRAWING IS THE SOLE PROPERTY OF H² PRECAST INC. ANY REPRODUCTION IN PART OR WHOLE WITHOUT THE WRITTEN PERMISSION OF FM&M IS PROHIBITED.

This assembly is constructed and tested to conform with WSDOT Standard Specification 9-29.2(2), Standard Duty Junction Boxes.

REV	DESCRIPTION	DATE	INITIALS
A	MODIFEID WELD NOTE. ADDED NOTE.	5/17/14	DK

GERARD G. NAVARRA
STATE OF WASHINGTON
28243
STRUCTURAL ENGINEER
PROFESSIONAL ENGINEER
6/11/15

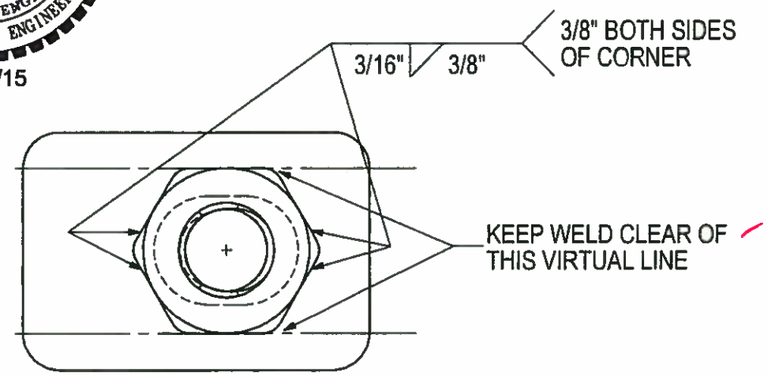

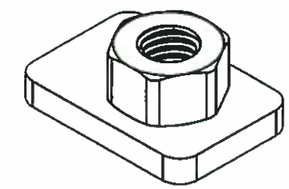

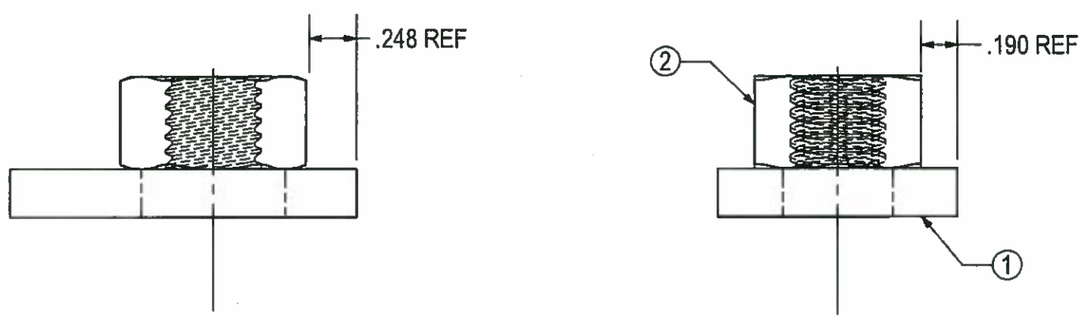

APPROVED
Washington State
Department of Transportation
HQ Traffic Operations Office
DATE June 17, 2015 TAT

#	SKU#	DESCRIPTION	MATERIAL	QTY.
2	101-00047	NUT, HEX(HEAVY) 1/2-13	316SS	1
1	716-L002	LOCK LATCH	A36HR	1

PARTS LIST

Prepared for H² PRECAST INC.

LOCK TAB WELD ASSY

THIS DRAWING CREATED FOR MANUFACTURING REFERENCE ONLY AND IS NOT INTENDED TO SUPERCEDE H² PRECAST INC. DRAWINGS OR SPECIFICATIONS OF THE REFERENCED PART.

HOLES ± 0.030
X.XXX ± 0.060
ANGLES ± 1.0°

SIZE A | DRAWN BY: DREW KEIM | PROGRAM NUMBER: 700-00005 | DATE CREATED: 4/28/14 | REV. A

SCALE :NONE | CAD FILE: 700-00005A | SHEET 1 of 1

THE INFORMATION CONTAINED IN THIS DRAWING IS THE SOLE PROPERTY OF H² PRECAST INC. ANY REPRODUCTION IN PART OR WHOLE WITHOUT THE WRITTEN PERMISSION OF FM&M IS PROHIBITED.

This assembly is constructed and tested to conform with WSDOT Standard Specification 9-29.2(2), Standard Duty Junction Boxes.

GERARD G. NAVARRA
STATE OF WASHINGTON
28243
STRUCTURAL ENGINEER
PROFESSIONAL ENGINEER

6/11/15

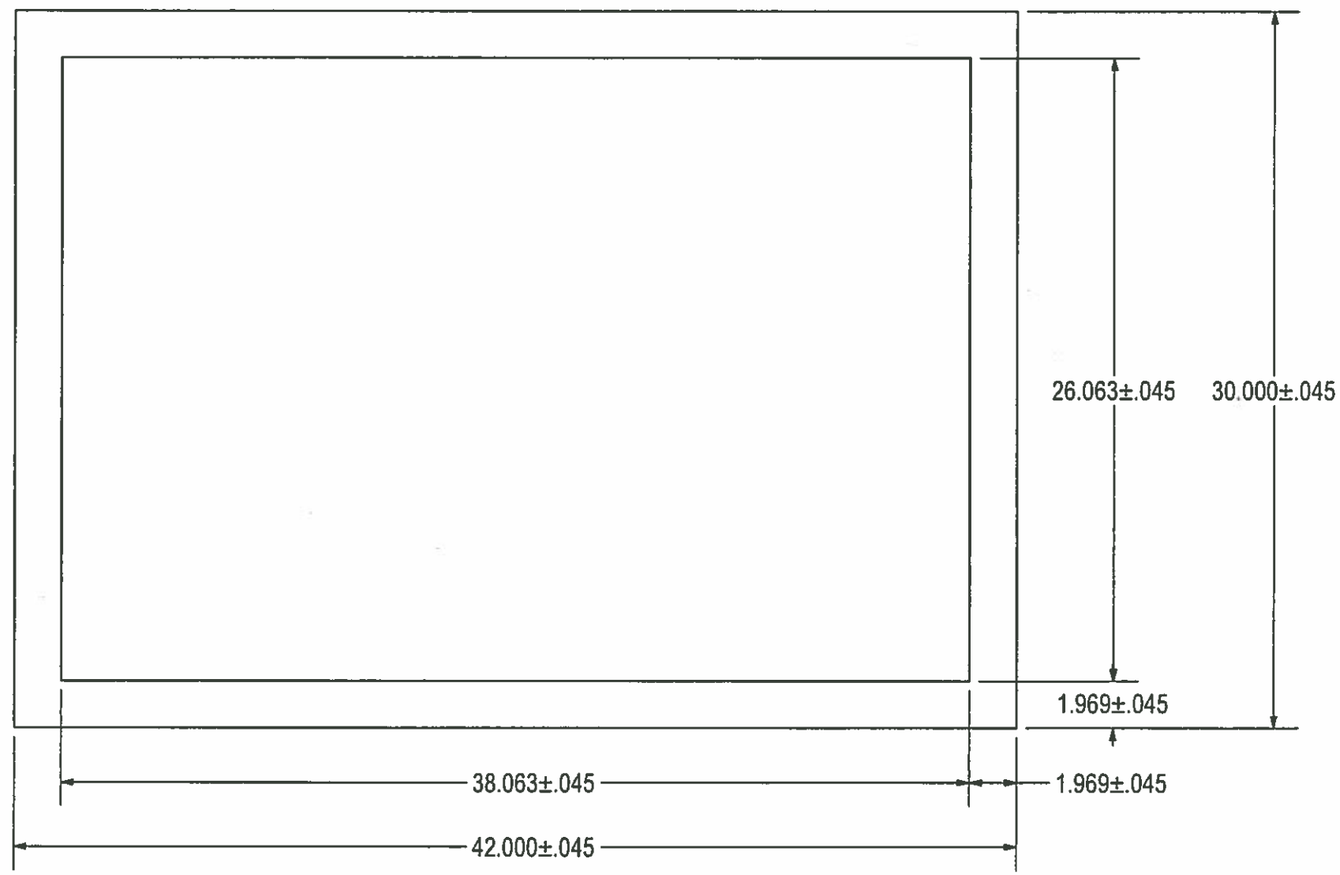

UNIVERSAL DWG:
716-T801 (DIAMOND PLATE)
716-S0031 (SLIPNOT PLATE)

APPROVED
Washington State
Department of Transportation
HQ Traffic Operations Office
DATE June 17, 2015 TAT

1/2 DIAMOND PLATE / SLIPNOT- 42.000 X 30.000

THIS DRAWING CREATED FOR MANUFACTURING REFERENCE ONLY AND IS NOT INTENDED TO SUPERCEDE H² PRECAST INC. DRAWINGS OR SPECIFICATIONS OF THE REFERENCED PART.

Prepared for H² PRECAST INC.

FRAME; TYPE 8 J BOX

SIZE	DRAWN BY:	PROGRAM NUMBER:	REV.
A	DREW KEIM	DATE CREATED: 7/20/12	
SCALE :NONE	CAD FILE: 716-S0031	SHEET 1 of 2	

THE INFORMATION CONTAINED IN THIS DRAWING IS THE SOLE PROPERTY OF H² PRECAST INC. ANY REPRODUCTION IN PART OR WHOLE WITHOUT THE WRITTEN PERMISSION OF FM&M IS PROHIBITED.

This assembly is constructed and tested to conform with WSDOT Standard Specification 9-29.2(2), Standard Duty Junction Boxes.

GERARD G. NAVARRA
STATE OF WASHINGTON
28243
STRUCTURAL ENGINEER
PROFESSIONAL ENGINEER
6/11/15

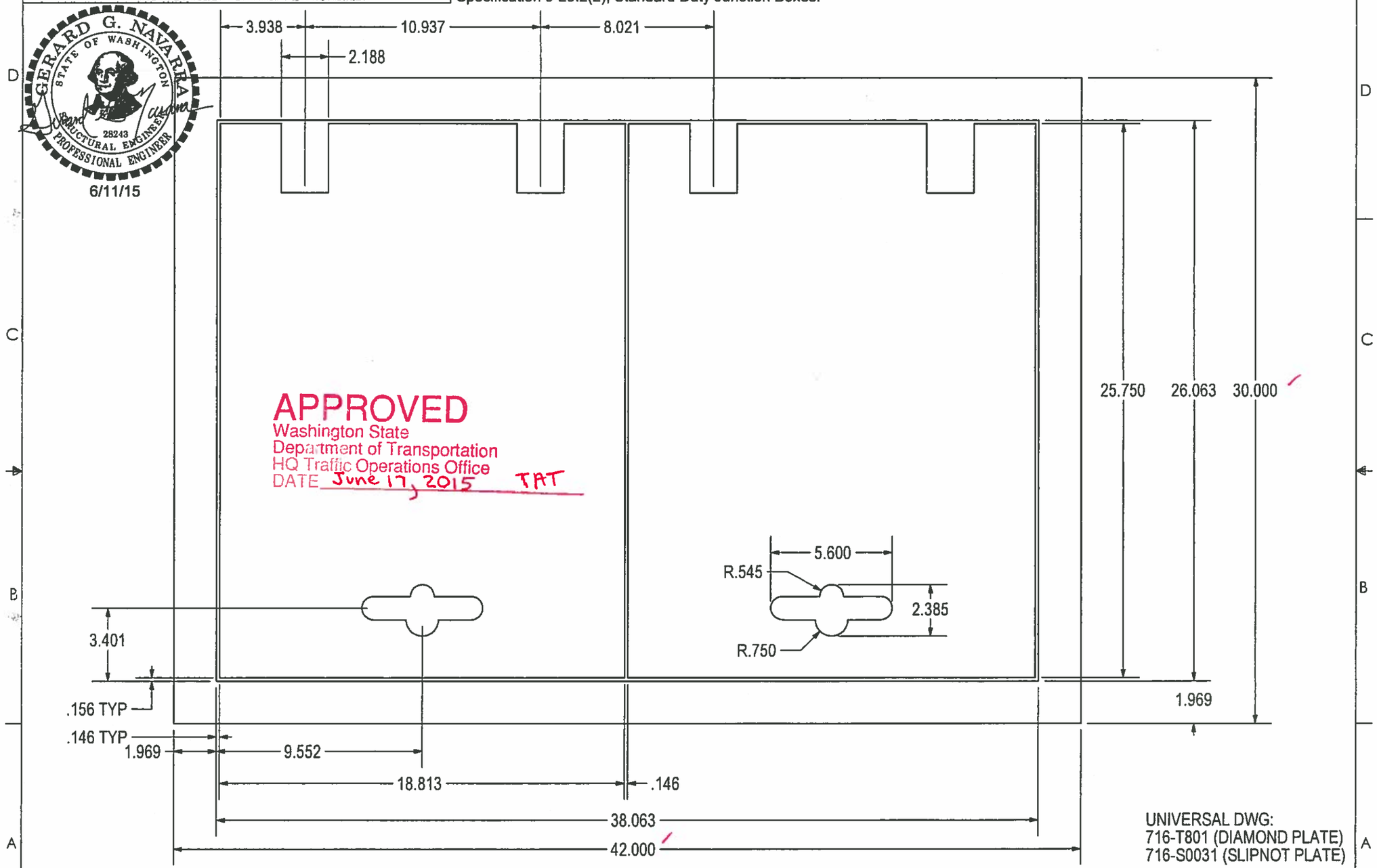

APPROVED
Washington State
Department of Transportation
HQ Traffic Operations Office
DATE June 17, 2015 TAT

UNIVERSAL DWG:
716-T801 (DIAMOND PLATE)
716-S0031 (SLIPNOT PLATE)

TYPE 8 J BOX - FRAME & DOORS, AS CUT

THIS DRAWING CREATED FOR MANUFACTURING REFERENCE ONLY AND IS NOT INTENDED TO SUPERCEDE H² PRECAST INC. DRAWINGS OR SPECIFICATIONS OF THE REFERENCED PART.

Prepared for H² PRECAST INC.			
FRAME; TYPE 8 J BOX			
SIZE A	DRAWN BY: DREW KEIM	PROGRAM NUMBER: DATE CREATED: 7/20/12	REV.
SCALE :NONE	CAD FILE: 716-S0031	SHEET 2 of 2	

THE INFORMATION CONTAINED IN THIS DRAWING IS THE SOLE PROPERTY OF H² PRECAST INC. ANY REPRODUCTION IN PART OR WHOLE WITHOUT THE WRITTEN PERMISSION OF FM&M IS PROHIBITED.

This assembly is constructed and tested to conform with WSDOT Standard Specification 9-29.2(2), Standard Duty Junction Boxes.

GERARD G. NAVARRA
STATE OF WASHINGTON
28243
STRUCTURAL ENGINEER
PROFESSIONAL ENGINEER
6/11/15

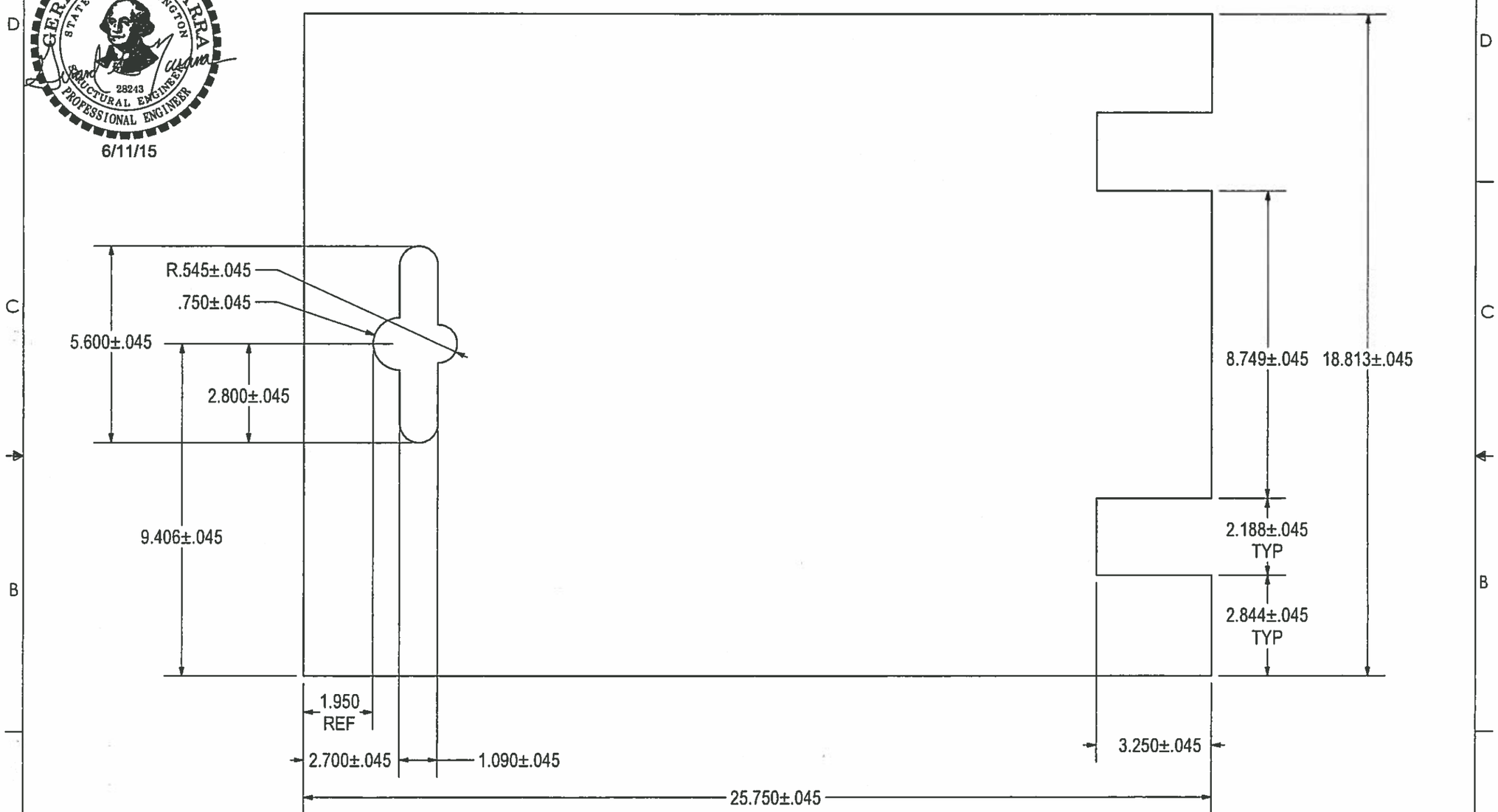

UNIVERSAL DWG:
716-T802 (DIAMOND PLATE)
716-S0032 (SLIPNOT PLATE)

APPROVED
Washington State
Department of Transportation
HQ Traffic Operations Office
DATE June 17, 2015 TAT

1/2 DIAMOND PLATE / SLIPNOT- 25.750 X 18.813
(2) PLS

THIS DRAWING CREATED FOR MANUFACTURING REFERENCE ONLY AND IS NOT INTENDED TO SUPERCEDE H² PRECAST INC. DRAWINGS OR SPECIFICATIONS OF THE REFERENCED PART.

Prepared for H² PRECAST INC.			
DOOR; TYPE 8 J BOX			
SIZE A	DRAWN BY: DREW KEIM	PROGRAM NUMBER: DATE CREATED: 7/20/12	REV.
SCALE :NONE	CAD FILE: 716-S0032	SHEET 1 of 1	

THE INFORMATION CONTAINED IN THIS DRAWING IS THE SOLE PROPERTY OF H² PRECAST INC. ANY REPRODUCTION IN PART OR WHOLE WITHOUT THE WRITTEN PERMISSION OF FM&M IS PROHIBITED.

This assembly is constructed and tested to conform with WSDOT Standard Specification 9-29.2(2), Standard Duty Junction Boxes.

GERARD G. NAVARRA
STATE OF WASHINGTON
28243
STRUCTURAL ENGINEER
PROFESSIONAL ENGINEER
6/11/15

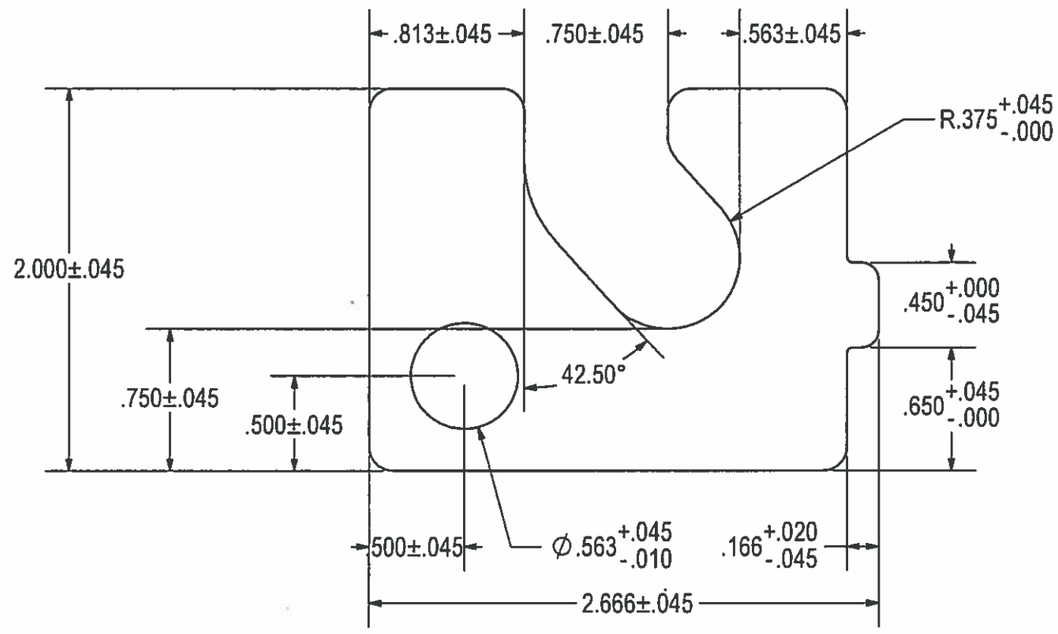

APPROVED
Washington State
Department of Transportation
HQ Traffic Operations Office
DATE June 17, 2015 TAT

3/8 HR - 2.666 X 2.000
(4) REQ'D

THIS DRAWING CREATED FOR MANUFACTURING REFERENCE ONLY AND IS NOT INTENDED TO SUPERCEDE H² PRECAST INC. DRAWINGS OR SPECIFICATIONS OF THE REFERENCED PART.

Prepared for H² PRECAST INC.			
HINGE; TYPE 8 J BOX			
SIZE A	DRAWN BY: DREW KEIM	PROGRAM NUMBER: 716-T803 DATE CREATED: 7/20/12	REV.
SCALE :NONE	CAD FILE: 03 HINGE	SHEET 1 of 1	

THE INFORMATION CONTAINED IN THIS DRAWING IS THE SOLE PROPERTY OF H² PRECAST INC. ANY REPRODUCTION IN PART OR WHOLE WITHOUT THE WRITTEN PERMISSION OF FM&M IS PROHIBITED.

This assembly is constructed and tested to conform with WSDOT Standard Specification 9-29.2(2), Standard Duty Junction Boxes.

GERARD G. NAVARRA
STATE OF WASHINGTON
28243
STRUCTURAL ENGINEER
PROFESSIONAL ENGINEER

6/11/15

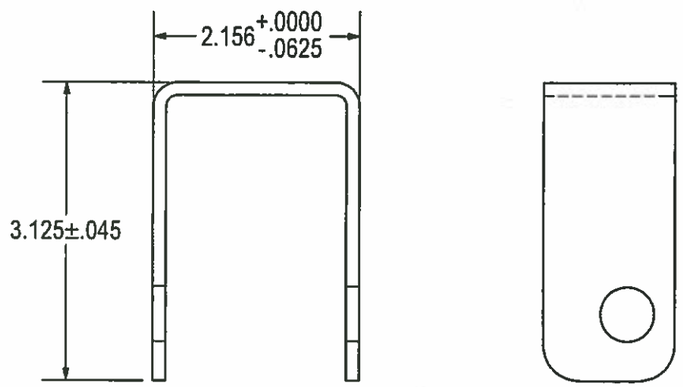

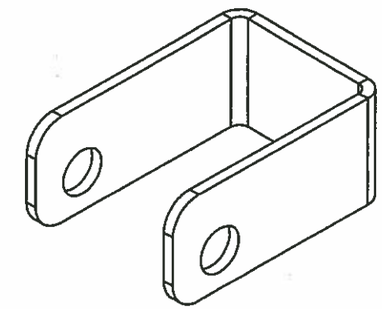

FORMED DETAILS

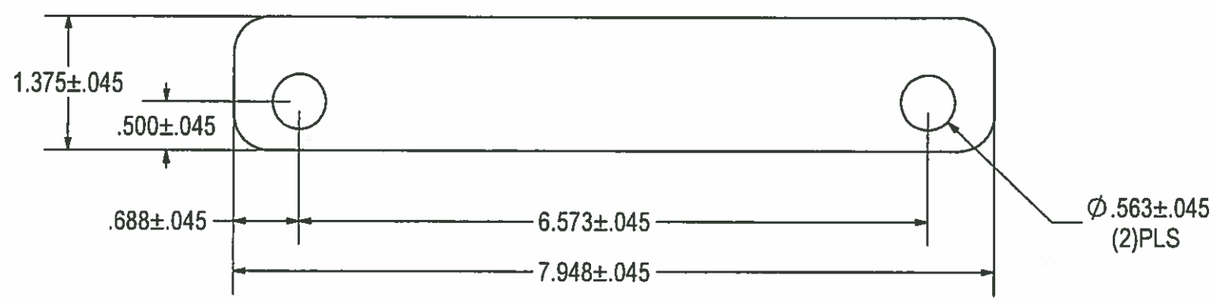

FLAT PATTERN

APPROVED
Washington State
Department of Transportation
HQ Traffic Operations Office
DATE June 17, 2015 TAT

10 GA HR - 7.948 X 1.375
(4) REQ'D
X = .216 @ 90° .125 R

THIS DRAWING CREATED FOR MANUFACTURING REFERENCE ONLY AND IS NOT INTENDED TO SUPERCEDE H² PRECAST INC. DRAWINGS OR SPECIFICATIONS OF THE REFERENCED PART.

Prepared for H² PRECAST INC.			
HINGE BLOCK; TYPE 8 J BOX			
SIZE A	DRAWN BY: DREW KEIM	PROGRAM NUMBER: 716-T804 DATE CREATED: 7/20/12	REV.
SCALE :NONE	CAD FILE: 04 HINGE BLOCK		SHEET 1 of 1

THE INFORMATION CONTAINED IN THIS DRAWING IS THE SOLE PROPERTY OF H² PRECAST INC. ANY REPRODUCTION IN PART OR WHOLE WITHOUT THE WRITTEN PERMISSION OF FM&M IS PROHIBITED.

This assembly is constructed and tested to conform with WSDOT Standard Specification 9-29.2(2), Standard Duty Junction Boxes.

GERARD G. NAVARRA
STATE OF WASHINGTON
28243
STRUCTURAL ENGINEER
PROFESSIONAL ENGINEER

6/11/15

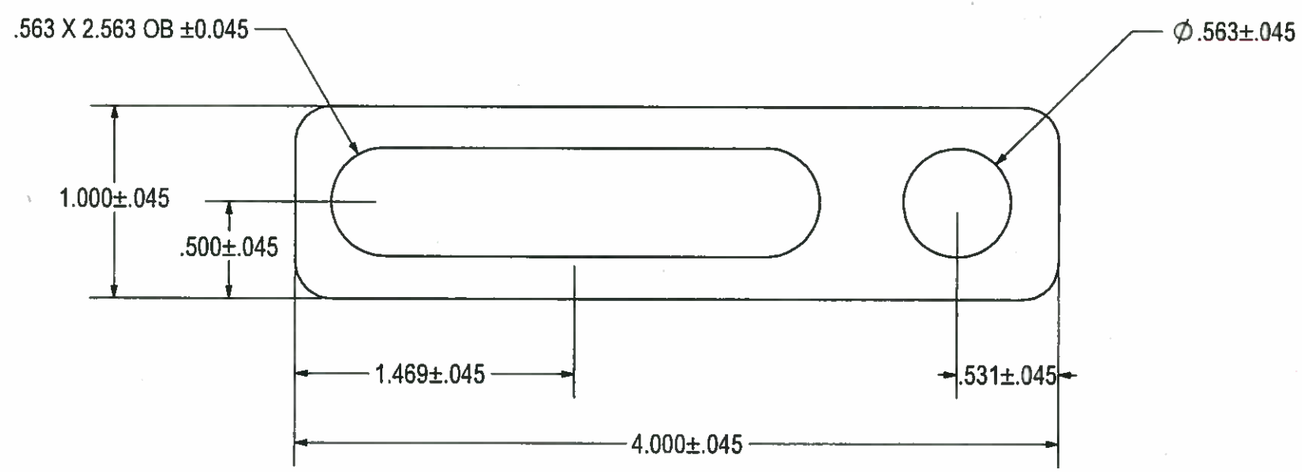

APPROVED
Washington State
Department of Transportation
HQ Traffic Operations Office
DATE June 17, 2015

1/4 HR - 4.000 X 1.000
(8) REQ'D

THIS DRAWING CREATED FOR MANUFACTURING REFERENCE ONLY AND IS NOT INTENDED TO SUPERCEDE H² PRECAST INC. DRAWINGS OR SPECIFICATIONS OF THE REFERENCED PART.

Prepared for H² PRECAST INC.			
HINGE SLIDE; TYPE 8 J BOX			
SIZE A	DRAWN BY: DREW KEIM	PROGRAM NUMBER: 716-T805 DATE CREATED: 7/20/12	REV.
SCALE :NONE	CAD FILE: 05 HINGE SLIDE		SHEET 1 of 1

THE INFORMATION CONTAINED IN THIS DRAWING IS THE SOLE PROPERTY OF H² PRECAST INC. ANY REPRODUCTION IN PART OR WHOLE WITHOUT THE WRITTEN PERMISSION OF FM&M IS PROHIBITED.

This assembly is constructed and tested to conform with WSDOT Standard Specification 9-29.2(2), Standard Duty Junction Boxes.

GERARD G. NAVARRA
STATE OF WASHINGTON
28243
STRUCTURAL ENGINEER
PROFESSIONAL ENGINEER
6/11/15

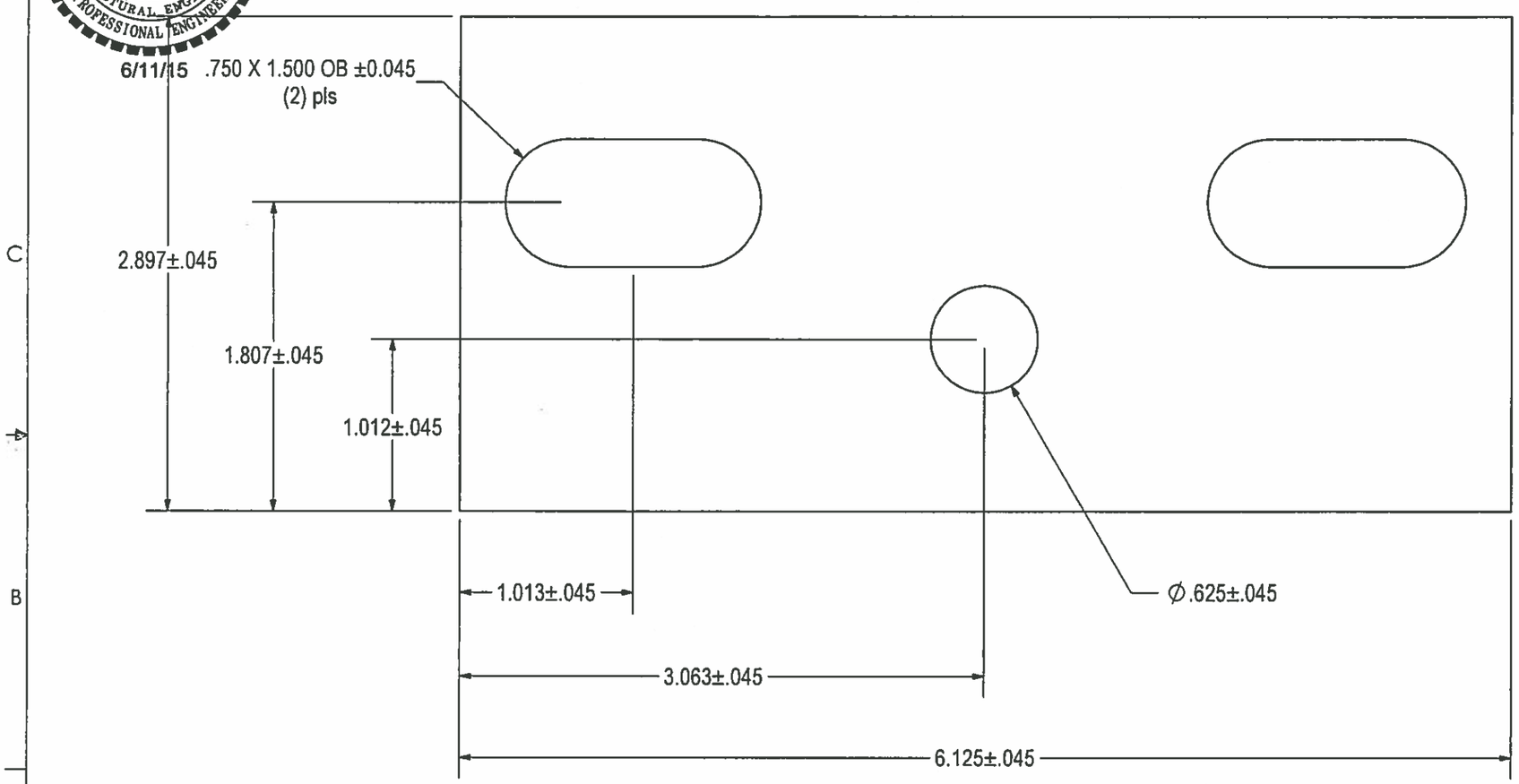

APPROVED
Washington State
Department of Transportation
HQ Traffic Operations Office
DATE June 17, 2015 TAT

1/4 HR - 6.125 X 3.073
(2) REQ'D

THIS DRAWING CREATED FOR MANUFACTURING REFERENCE ONLY AND IS NOT INTENDED TO SUPERCEDE H² PRECAST INC. DRAWINGS OR SPECIFICATIONS OF THE REFERENCED PART.

Prepared for H² PRECAST INC.			
HANDLE PLATE; TYPE 8 J BOX			
SIZE A	DRAWN BY: DREW KEIM	PROGRAM NUMBER: 716-T806 DATE CREATED: 7/20/12	REV.
SCALE: NONE	CAD FILE: 06 HANDLE PLATE		SHEET 1 of 1

THE INFORMATION CONTAINED IN THIS DRAWING IS THE SOLE PROPERTY OF H² PRECAST INC. ANY REPRODUCTION IN PART OR WHOLE WITHOUT THE WRITTEN PERMISSION OF FM&M IS PROHIBITED.

This assembly is constructed and tested to conform with WSDOT Standard Specification 9-29.2(2), Standard Duty Junction Boxes.

GERARD G. NAVARRA
STATE OF WASHINGTON
28243
STRUCTURAL ENGINEER
PROFESSIONAL ENGINEER

6/11/15

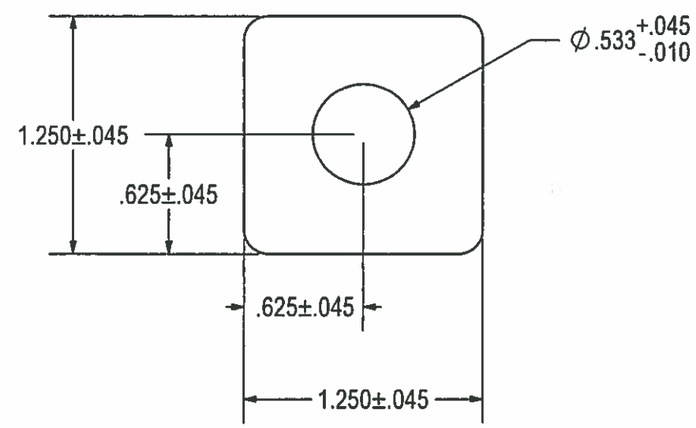

APPROVED
Washington State
Department of Transportation
HQ Traffic Operations Office
DATE June 17, 2015 TAT

3/16 HR - 1.250 X 1.250
(4) PLS

THIS DRAWING CREATED FOR MANUFACTURING REFERENCE ONLY AND IS NOT INTENDED TO SUPERCEDE H² PRECAST INC. DRAWINGS OR SPECIFICATIONS OF THE REFERENCED PART.

Prepared for H² PRECAST INC.			
HANDLE STOP, TYPE 8 J BOX			
SIZE A	DRAWN BY: DREW KEIM	PROGRAM NUMBER: 716-T807 DATE CREATED: 7/20/12	REV.
SCALE :NONE	CAD FILE: 07 HANDLE STOP	SHEET 1 of 1	

THE INFORMATION CONTAINED IN THIS DRAWING IS THE SOLE PROPERTY OF H² PRECAST INC. ANY REPRODUCTION IN PART OR WHOLE WITHOUT THE WRITTEN PERMISSION OF FM&M IS PROHIBITED.

This assembly is constructed and tested to conform with WSDOT Standard Specification 9-29.2(2), Standard Duty Junction Boxes.

GERARD G. NAVARRA
STATE OF WASHINGTON
28243
STRUCTURAL ENGINEER
PROFESSIONAL ENGINEER

6/11/15

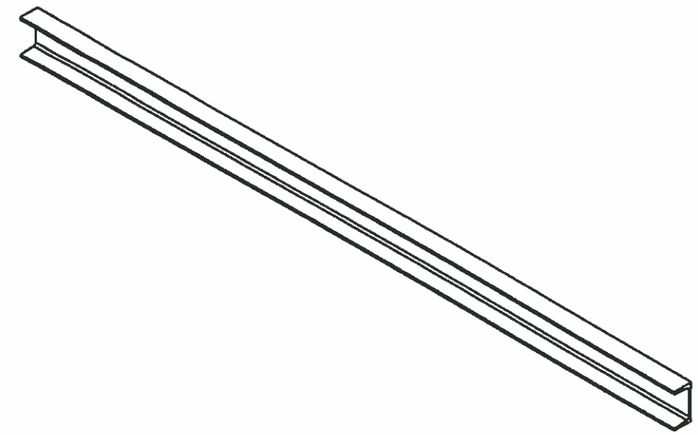

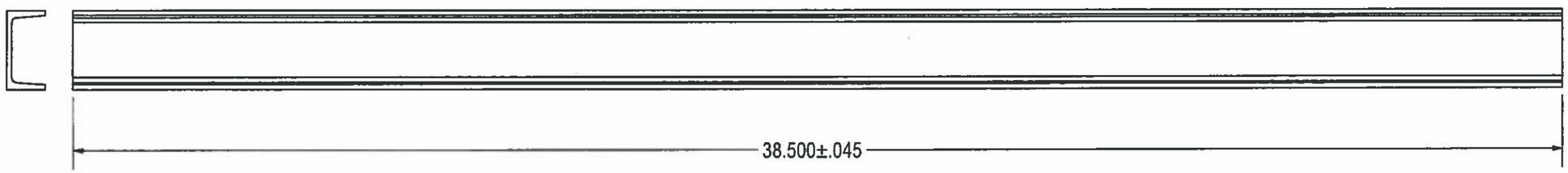

APPROVED
Washington State
Department of Transportation
HQ Traffic Operations Office
DATE June 17, 2015 TAT

CHANNEL, C - 2 x 1 x 3/16 x 38.500 LONG

THIS DRAWING CREATED FOR MANUFACTURING REFERENCE ONLY AND IS NOT INTENDED TO SUPERCEDE H² PRECAST INC. DRAWINGS OR SPECIFICATIONS OF THE REFERENCED PART.

Prepared for H² PRECAST INC.			
C-CHANNEL FRONT; TYPE 8 J BOX			
SIZE A	DRAWN BY: DREW KEIM	PROGRAM NUMBER: 716-T808 DATE CREATED: 7/20/12	REV.
SCALE :NONE	CAD FILE: 08 C-CHANNEL FRONT	SHEET 1 of 1	

THE INFORMATION CONTAINED IN THIS DRAWING IS THE SOLE PROPERTY OF H² PRECAST INC. ANY REPRODUCTION IN PART OR WHOLE WITHOUT THE WRITTEN PERMISSION OF FM&M IS PROHIBITED.

This assembly is constructed and tested to conform with WSDOT Standard Specification 9-29.2(2), Standard Duty Junction Boxes.

GERARD G. NAVARRA
STATE OF WASHINGTON
28243
STRUCTURAL ENGINEER
PROFESSIONAL ENGINEER

6/11/15

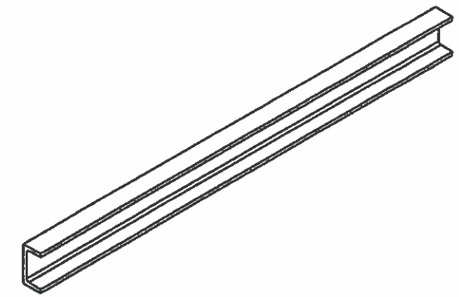

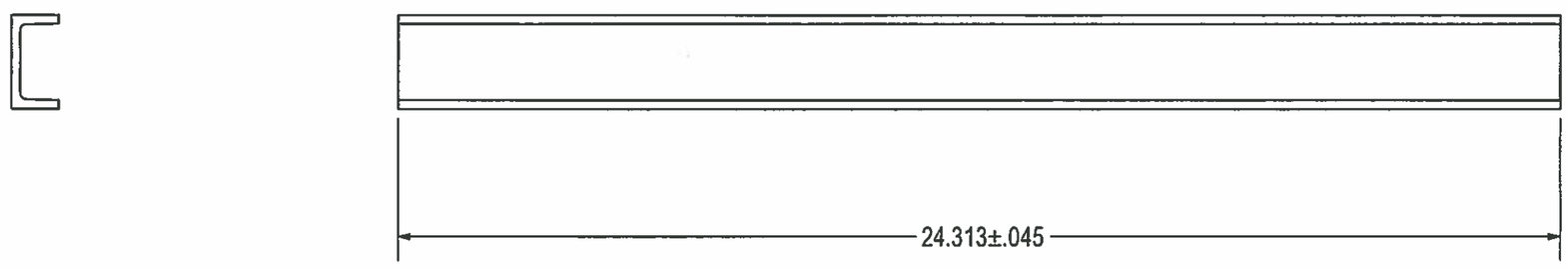

APPROVED
Washington State
Department of Transportation
HQ Traffic Operations Office
DATE June 17, 2015 TAT

CHANNEL, C - 2 x 1 x 3/16 x 24.313 LONG
(2) REQ'D

THIS DRAWING CREATED FOR MANUFACTURING REFERENCE ONLY AND IS NOT INTENDED TO SUPERCEDE H² PRECAST INC. DRAWINGS OR SPECIFICATIONS OF THE REFERENCED PART.

Prepared for H² PRECAST INC.			
C-CHANNEL SIDES; TYPE 8 J BOX			
SIZE A	DRAWN BY: DREW KEIM	PROGRAM NUMBER: 716-T809 DATE CREATED: 7/20/12	REV.
SCALE :NONE	CAD FILE: 09 C-CHANNEL SIDES	SHEET 1 of 1	

THE INFORMATION CONTAINED IN THIS DRAWING IS THE SOLE PROPERTY OF H² PRECAST INC. ANY REPRODUCTION IN PART OR WHOLE WITHOUT THE WRITTEN PERMISSION OF FM&M IS PROHIBITED.

This assembly is constructed and tested to conform with WSDOT Standard Specification 9-29.2(2), Standard Duty Junction Boxes.

GERARD G. NAVARRA
STATE OF WASHINGTON
28243
STRUCTURAL ENGINEER
PROFESSIONAL ENGINEER
6/11/15

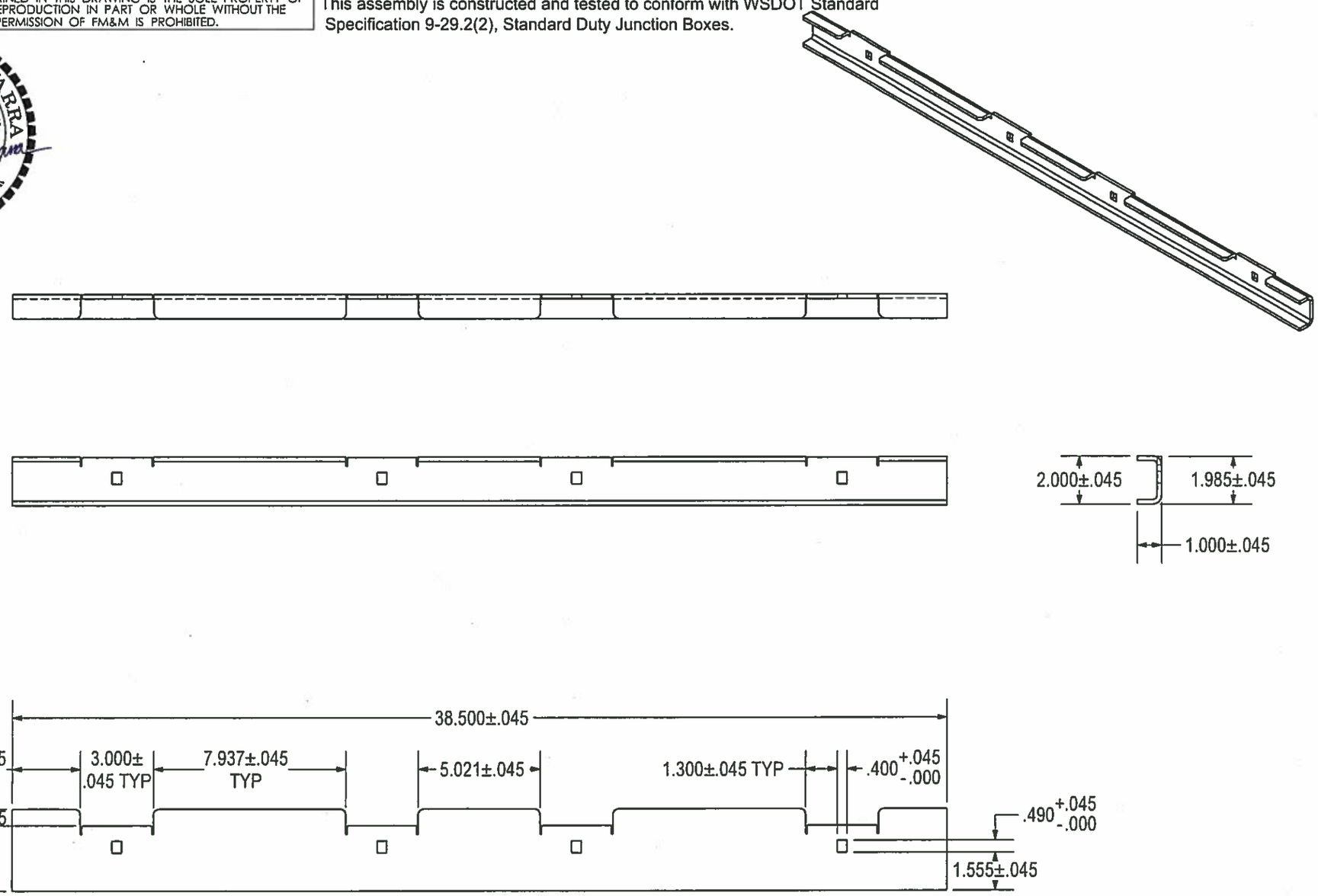

APPROVED
Washington State
Department of Transportation
HQ Traffic Operations Office
DATE June 17, 2015 TAT

3/16 HR - 38.500 X 3.351
x = .325 @ 90° .188 R

THIS DRAWING CREATED FOR MANUFACTURING REFERENCE ONLY AND IS NOT INTENDED TO SUPERCEDE H² PRECAST INC. DRAWINGS OR SPECIFICATIONS OF THE REFERENCED PART.

Prepared for H² PRECAST INC.			
C-CHANNEL HINGE; TYPE 8 J BOX			
SIZE A	DRAWN BY: DREW KEIM	PROGRAM NUMBER: 716-T810 DATE CREATED: 7/20/12	REV.
SCALE :NONE	CAD FILE: 10 C-CHANNEL HINGE	SHEET 1 of 1	

THE INFORMATION CONTAINED IN THIS DRAWING IS THE SOLE PROPERTY OF H² PRECAST INC. ANY REPRODUCTION IN PART OR WHOLE WITHOUT THE WRITTEN PERMISSION OF FM&M IS PROHIBITED.

This assembly is constructed and tested to conform with WSDOT Standard Specification 9-29.2(2), Standard Duty Junction Boxes.

GERARD G. NAVARRA
STATE OF WASHINGTON
28243
STRUCTURAL ENGINEER
PROFESSIONAL ENGINEER
6/11/15

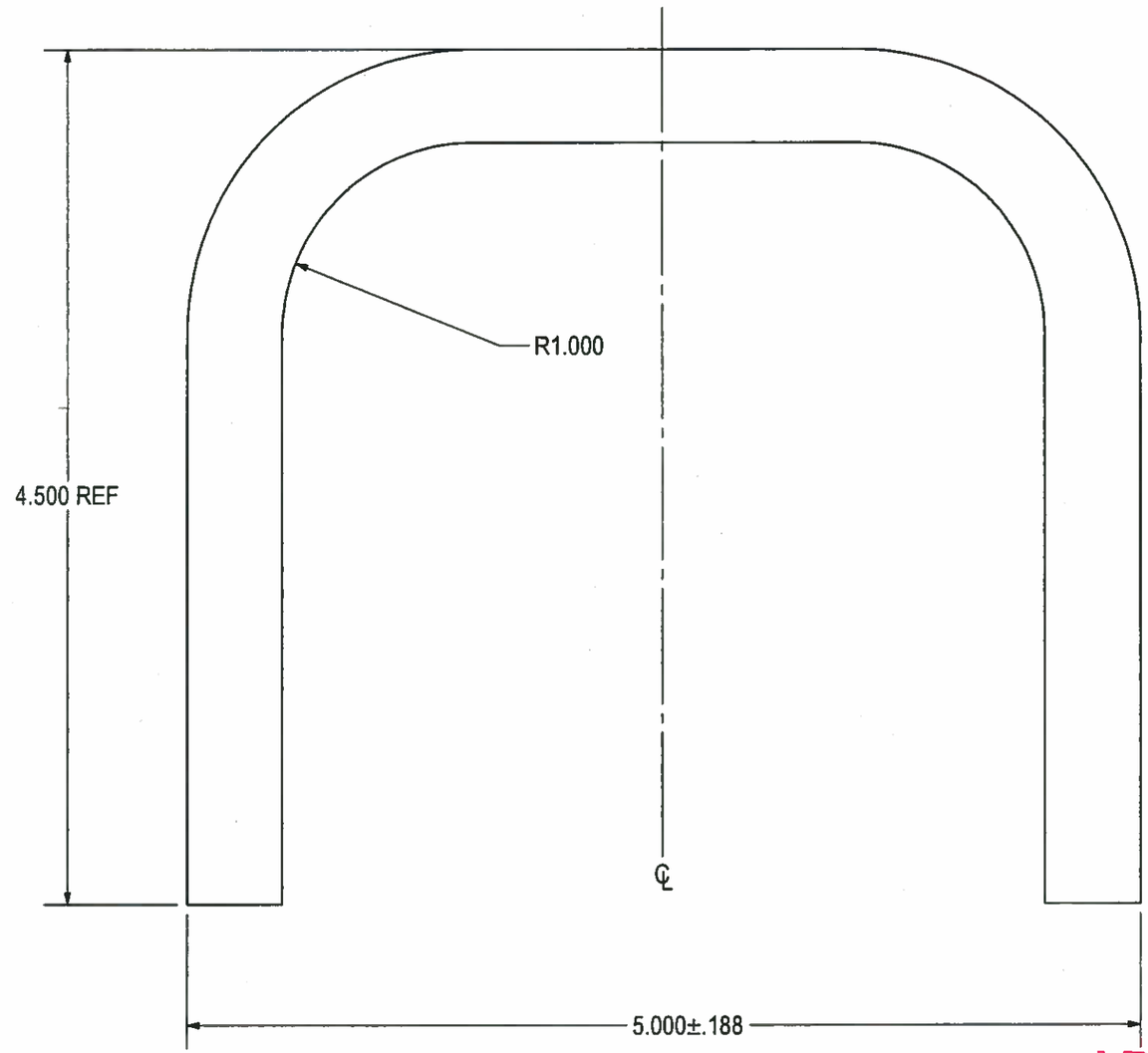

APPROVED
Washington State
Department of Transportation
HQ Traffic Operations Office
DATE June 17, 2015 TAT

1/2 ROUND ROD - 12.000" LONG
(2) PLS

THIS DRAWING CREATED FOR MANUFACTURING REFERENCE ONLY AND IS NOT INTENDED TO SUPERCEDE H² PRECAST INC. DRAWINGS OR SPECIFICATIONS OF THE REFERENCED PART.

Prepared for H² PRECAST INC.			
HANDLE; TYPE 8 J BOX			
SIZE A	DRAWN BY: DREW KEIM	PROGRAM NUMBER: 716-T811 DATE CREATED: 7/23/12	REV.
SCALE :NONE	CAD FILE: 11 HANDLE	SHEET 1 of 1	

THE INFORMATION CONTAINED IN THIS DRAWING IS THE SOLE PROPERTY OF H² PRECAST INC. ANY REPRODUCTION IN PART OR WHOLE WITHOUT THE WRITTEN PERMISSION OF FM&M IS PROHIBITED.

This assembly is constructed and tested to conform with WSDOT Standard Specification 9-29.2(2), Standard Duty Junction Boxes.

REV	DESCRIPTION	DATE	INITIALS
A	ADDED CHAMFER NOTE	6/10/14	DK

GERARD G. NAVARRA
STATE OF WASHINGTON
28243
STRUCTURAL ENGINEER
PROFESSIONAL ENGINEER
6/11/15

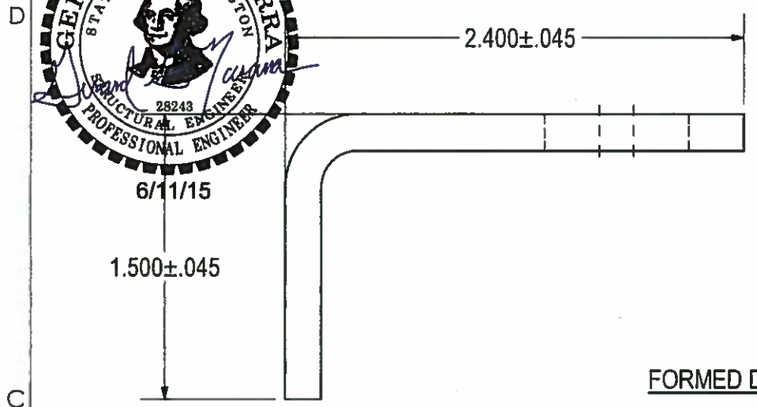

FORMED DETAILS

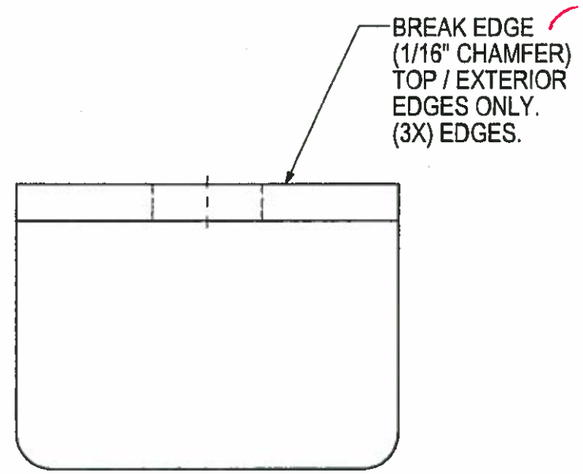

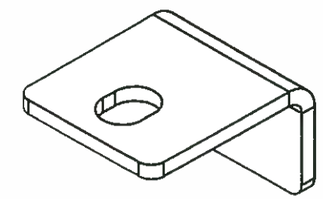

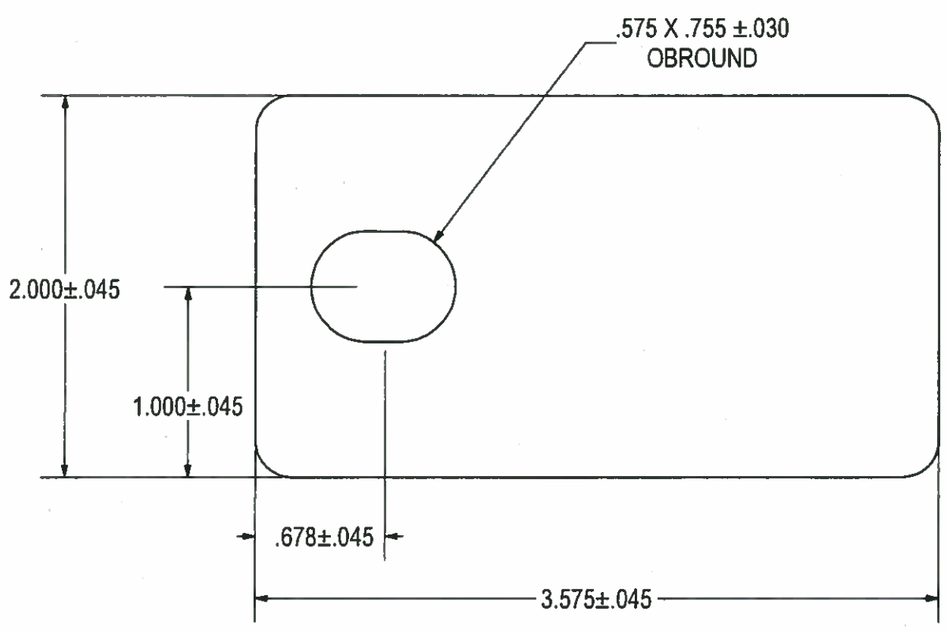

FLAT PATTERN

APPROVED
Washington State
Department of Transportation
HQ Traffic Operations Office
DATE June 17, 2015 TAT

3/16HR - 3.575 X 2.000
X = .325 @ 90° .188 R

THIS DRAWING CREATED FOR MANUFACTURING REFERENCE ONLY AND IS NOT INTENDED TO SUPERCEDE H² PRECAST INC. DRAWINGS OR SPECIFICATIONS OF THE REFERENCED PART.

Prepared for H² PRECAST INC.

LATCH HOUSING, TYPE 8 J BOX

SIZE	DRAWN BY:	PROGRAM NUMBER:	REV.
A	DREW KEIM	DATE CREATED: 8/21/12 716-T812	A
SCALE :NONE	CAD FILE: 12 LATCH HOUSING, T8	SHEET 1 of 1	

THE INFORMATION CONTAINED IN THIS DRAWING IS THE SOLE PROPERTY OF H² PRECAST INC. ANY REPRODUCTION IN PART OR WHOLE WITHOUT THE WRITTEN PERMISSION OF FM&M IS PROHIBITED.

This assembly is constructed and tested to conform with WSDOT Standard Specification 9-29.2(2), Standard Duty Junction Boxes.

GERARD G. NAVARRA
STATE OF WASHINGTON
28243
STRUCTURAL ENGINEER
PROFESSIONAL ENGINEER
6/11/15

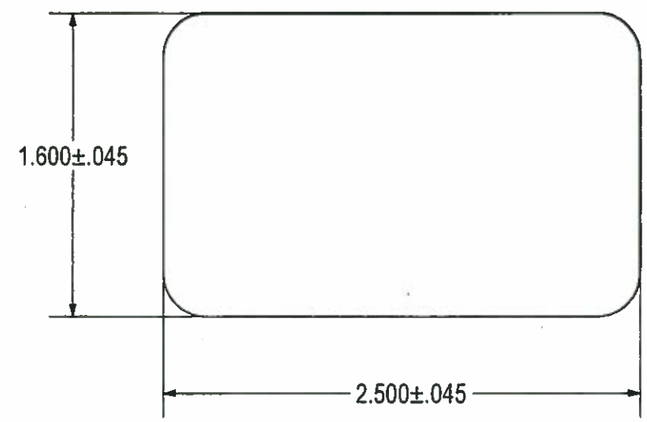

APPROVED
Washington State
Department of Transportation
HQ Traffic Operations Office
DATE June 17, 2015 TAT

3/16 HR - 2.500 x 1.600
(2) PLS

THIS DRAWING CREATED FOR MANUFACTURING REFERENCE ONLY AND IS NOT INTENDED TO SUPERCEDE H² PRECAST INC. DRAWINGS OR SPECIFICATIONS OF THE REFERENCED PART.

Prepared for H² PRECAST INC.			
FRAME FILLER; TYPE 8 J BOX			
SIZE A	DRAWN BY: DREW KEIM	PROGRAM NUMBER: DATE CREATED: 8/1/12	716-T813	REV.
SCALE :NONE	CAD FILE: 13 FRAME FILLER		SHEET 1 of 1

THE INFORMATION CONTAINED IN THIS DRAWING IS THE SOLE PROPERTY OF H² PRECAST INC. ANY REPRODUCTION IN PART OR WHOLE WITHOUT THE WRITTEN PERMISSION OF FM&M IS PROHIBITED.

This assembly is constructed and tested to conform with WSDOT Standard Specification 9-29.2(2), Standard Duty Junction Boxes.

REV	DESCRIPTION	DATE	INITIALS
A	1/4" HR WAS 3/8" HR	6/5/14	DK

GERARD G. NAVARRA
STATE OF WASHINGTON
28243
STRUCTURAL ENGINEER
PROFESSIONAL ENGINEER

6/11/15

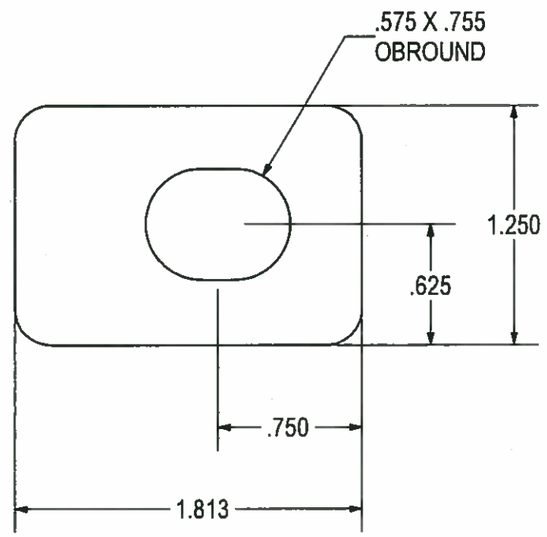

APPROVED
Washington State
Department of Transportation
HQ Traffic Operations Office
DATE June 17, 2015 TAT

1/4 HR - 1.813 X 1.250
(1) REQ'D

THIS DRAWING CREATED FOR MANUFACTURING REFERENCE ONLY AND IS NOT INTENDED TO SUPERCEDE H² PRECAST INC. DRAWINGS OR SPECIFICATIONS OF THE REFERENCED PART.

Prepared for H² PRECAST INC.

LOCK LATCH

HOLES ± 0.030	SIZE	DRAWN BY:	PROGRAM NUMBER:	716-L002	REV.
X.XXX ± 0.060	A	DREW KEIM	DATE CREATED: 5/21/12		A
ANGLES ± 1.0°	SCALE :NONE	CAD FILE: 716-L002A		SHEET 1 of 1	

THE INFORMATION CONTAINED IN THIS DRAWING IS THE SOLE PROPERTY OF H² PRECAST INC. ANY REPRODUCTION IN PART OR WHOLE WITHOUT THE WRITTEN PERMISSION OF FM&M IS PROHIBITED.

This assembly is constructed and tested to conform with WSDOT Standard Specification 9-29.2(2), Standard Duty Junction Boxes.

REV	DESCRIPTION	DATE	INITIALS
A	REDESIGNED. SHORTENED. ADDED SIDE FLANGES.	6/10/14	DK

GERARD G. NAVARRA
STATE OF WASHINGTON
28243
STRUCTURAL ENGINEER
PROFESSIONAL ENGINEER
6/11/15

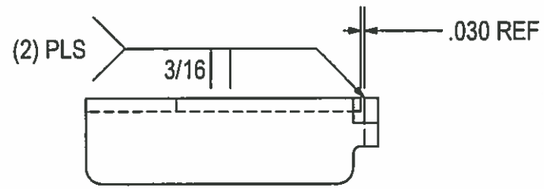

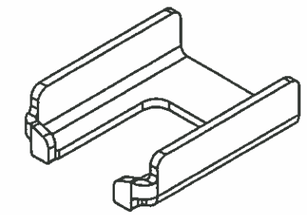

FORMED DETAILS

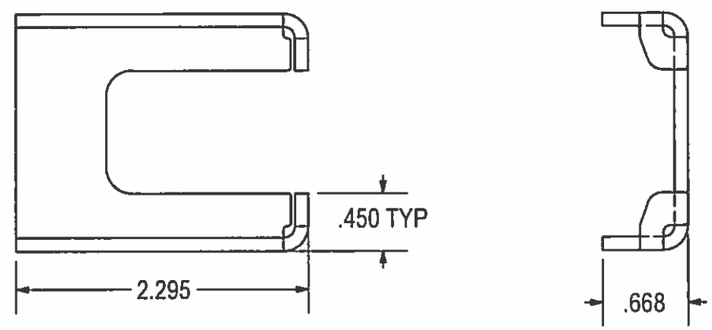

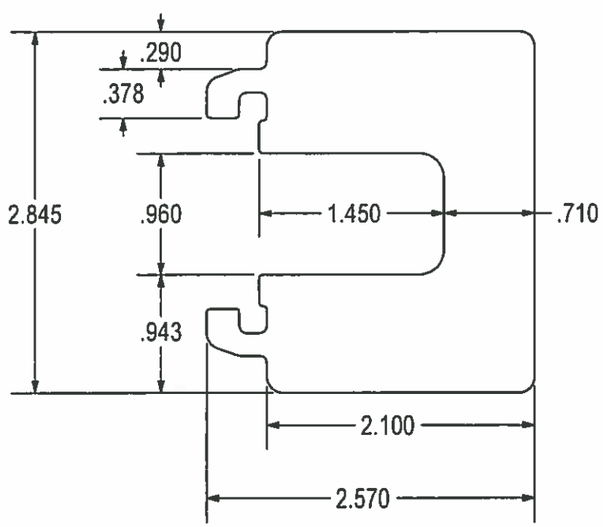

FLAT PATTERN

12 GA HR - 3.095 X 2.570
X = .175 @ 90° .090 R
(1) REQ'D

APPROVED
Washington State
Department of Transportation
HQ Traffic Operations Office
DATE June 17, 2015 TAT

Prepared for H² PRECAST INC.

LATCH GUIDE

THIS DRAWING CREATED FOR MANUFACTURING REFERENCE ONLY AND IS NOT INTENDED TO SUPERCEDE H² PRECAST INC. DRAWINGS OR SPECIFICATIONS OF THE REFERENCED PART.

HOLES ± 0.030
X.XXX ± 0.060
ANGLES ± 1.0°

SIZE	DRAWN BY:	PROGRAM NUMBER:	716-L004	REV.
A	DREW KEIM	DATE CREATED: 5/21/12		A
SCALE: NONE	CAD FILE: 716-L004A		SHEET 1 of 1	

THE INFORMATION CONTAINED IN THIS DRAWING IS THE SOLE PROPERTY OF H² PRECAST INC. ANY REPRODUCTION IN PART OR WHOLE WITHOUT THE WRITTEN PERMISSION OF FM&M IS PROHIBITED.

This assembly is constructed and tested to conform with WSDOT Standard Specification 9-29.2(2), Standard Duty Junction Boxes.

GERARD G. NAVARRA
STATE OF WASHINGTON
28243
STRUCTURAL ENGINEER
PROFESSIONAL ENGINEER

6/11/15

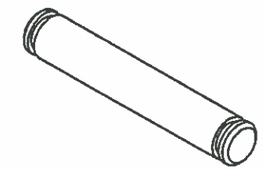

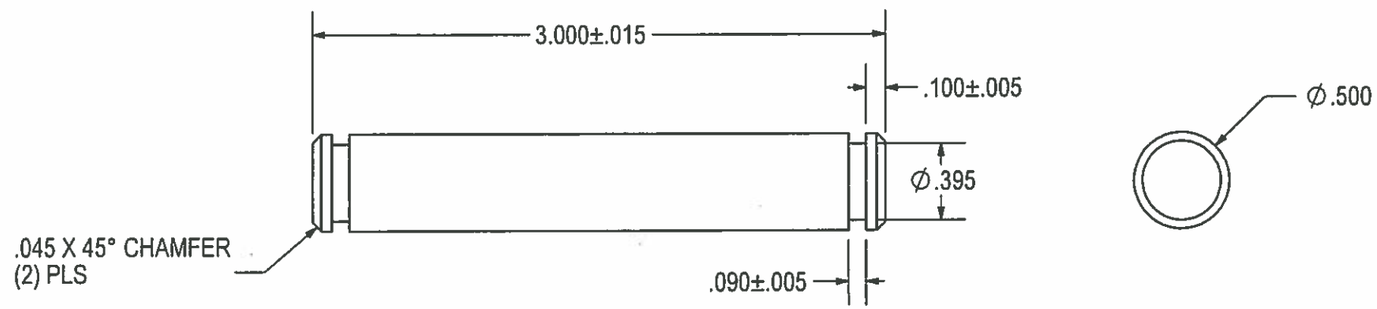

APPROVED
Washington State
Department of Transportation
HQ Traffic Operations Office
DATE June 17, 2015 TAT

1/2 RB 316 SS - 3.000 LONG
(4) REQ'D

THIS DRAWING CREATED FOR MANUFACTURING REFERENCE ONLY AND IS NOT INTENDED TO SUPERCEDE H² PRECAST INC. DRAWINGS OR SPECIFICATIONS OF THE REFERENCED PART.

Prepared for H² PRECAST INC.				
HINGE PIN, LARGE				
HOLES ± 0.030 X.XXX ± 0.060 ANGLES ± 1.0°	SIZE A	DRAWN BY: DREW KEIM	PROGRAM NUMBER: 100-11138 DATE CREATED: 9/10/12	REV.
	SCALE :NONE	CAD FILE: 100-11138	SHEET 1 of 1	

THE INFORMATION CONTAINED IN THIS DRAWING IS THE SOLE PROPERTY OF H² PRECAST INC. ANY REPRODUCTION IN PART OR WHOLE WITHOUT THE WRITTEN PERMISSION OF FM&M IS PROHIBITED.

This assembly is constructed and tested to conform with WSDOT Standard Specification 9-29.2(2), Standard Duty Junction Boxes.

GERARD G. NAVARRA
STATE OF WASHINGTON
28243
STRUCTURAL ENGINEER
PROFESSIONAL ENGINEER

6/11/15

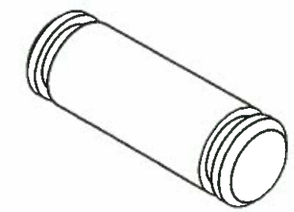

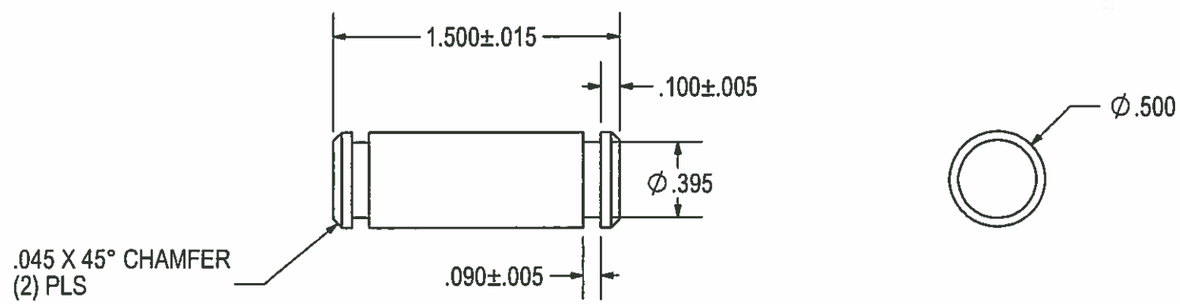

APPROVED
Washington State
Department of Transportation
HQ Traffic Operations Office
DATE June 17, 2015 TAT

1/2 RB 316 SS - 1.500 LONG
(4) REQ'D

THIS DRAWING CREATED FOR MANUFACTURING REFERENCE ONLY AND IS NOT INTENDED TO SUPERCEDE H² PRECAST INC. DRAWINGS OR SPECIFICATIONS OF THE REFERENCED PART.

Prepared for H² PRECAST INC.			
HINGE PIN, SM			
SIZE A	DRAWN BY: DREW KEIM	PROGRAM NUMBER: 100-11139 DATE CREATED: 9/10/12	REV.
SCALE :NONE	CAD FILE: 100-11139		SHEET 1 of 1