Speed : 55 M P H
A D T : 3500
Distance to Hazard : 31'

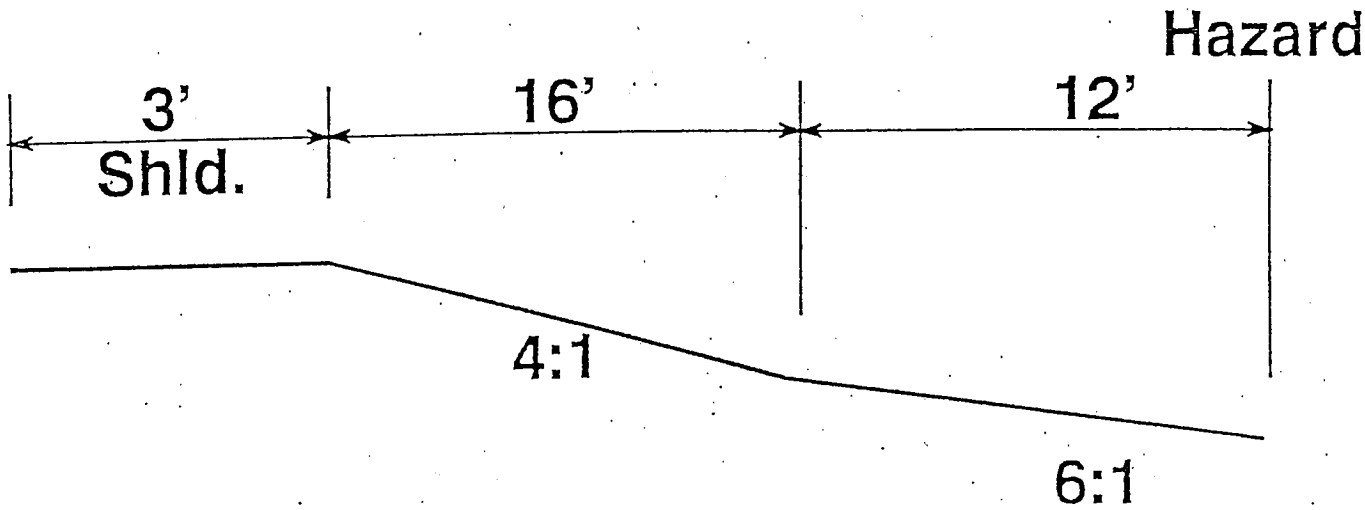

$$\frac{16}{4} + \frac{12}{6} = 4 + 2 = 6.0$$

$$\frac{28'}{6.0} = 4.67$$ Average Slope = 5:1

CZ = 29' : Hazard outside of clear zone.

c:\dgn\djg\distance.doc slide.000 5

Speed : 55 M P H
A D T : 3500
Distance to Hazard : 26'

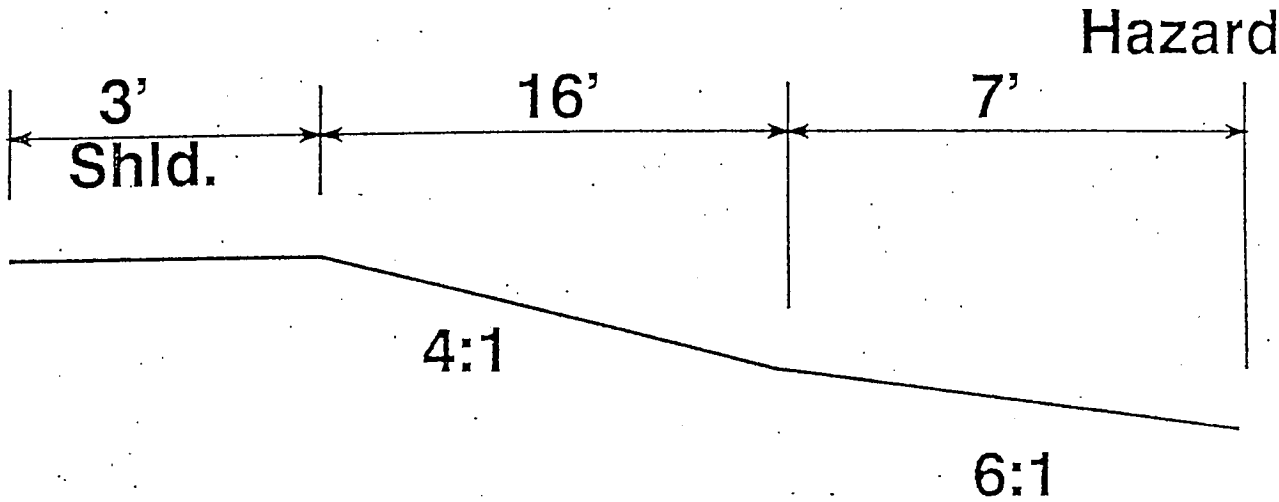

$$\frac{16}{4} + \frac{7}{6} = 4 + 1.17 = 5.17$$

$$\frac{23'}{5.17} = 4.45 \qquad \text{Average Slope} = 4:1$$

CZ = 34' : Hazard inside of clear zone.

b:\larryh\ja\dist.doc\local agency slide.000 3