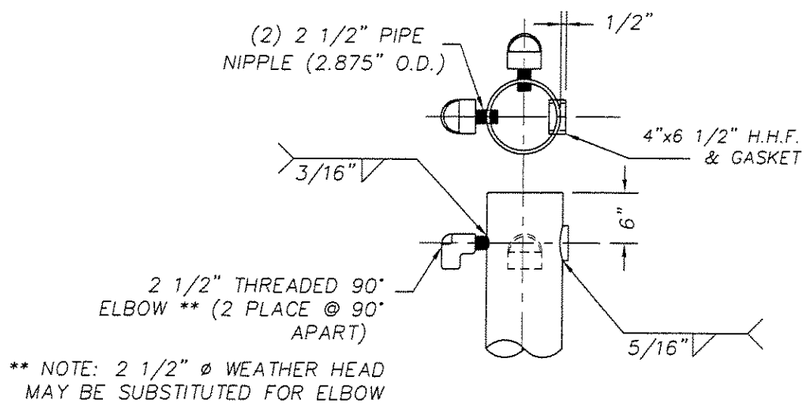

WIRE INLET DETAIL

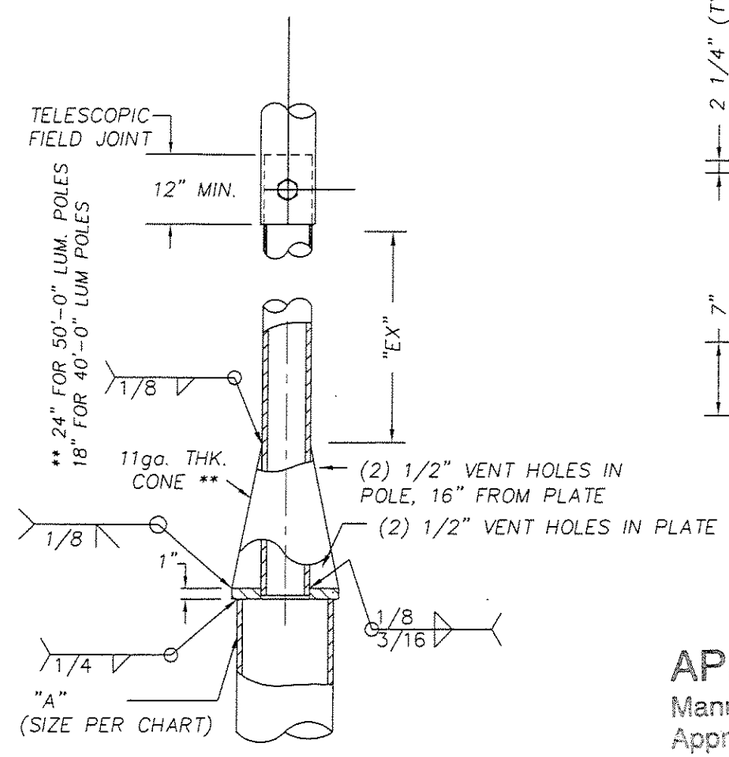

CONE DETAIL

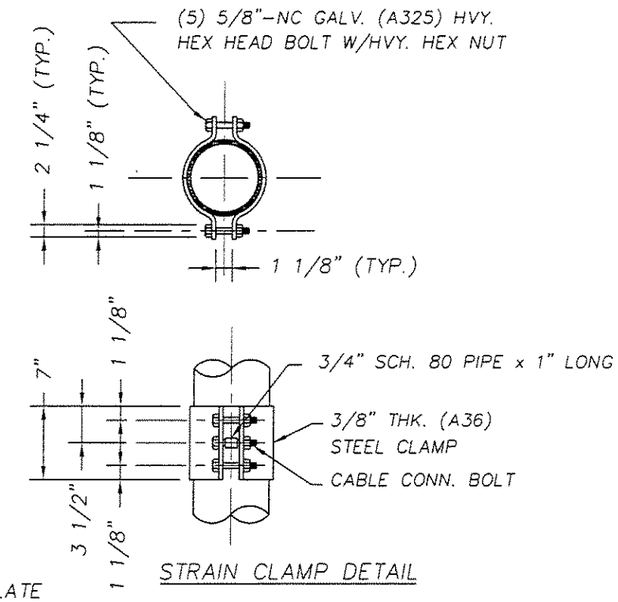

STRAIN CLAMP DETAIL

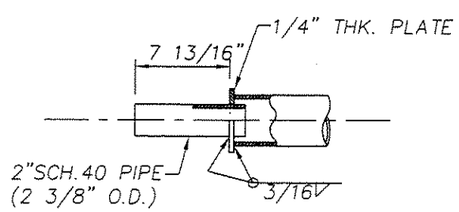

LUMINAIRE TENON DETAIL

APPROVED
Manufacturer's Pole Plan
Approved For Listing As A
Pre-Approved Drawing
WSDOT Bridge & Structures Office
By GB Date 4/6/2004

STATE OF OHIO
JOHN M. FRITZ
E-62406
REGISTERED
PROFESSIONAL ENGINEER
4/5/04

REVISIONS	STRAIN POLE STANDARDS TYPE V, AND TYPE 1 ARM WASHINGTON STATE	
	LOF ---- ENG.REF.# ---- REQ.# 0332-06-95 S.O.# ---- CAD# 0408D95	
	Union Metal CORPORATION	R08
	DRAWN TN DATE 2/1/83 CHECKED SMP	DRAWING NO. EA-10225 SHT 2 OF 2

ORIGINAL