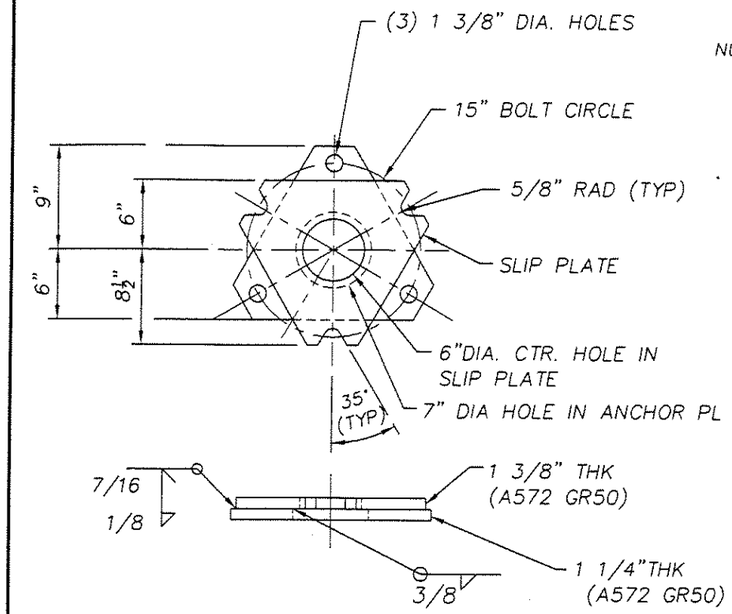

SLIP/ANCHOR BASE ASSEMBLY

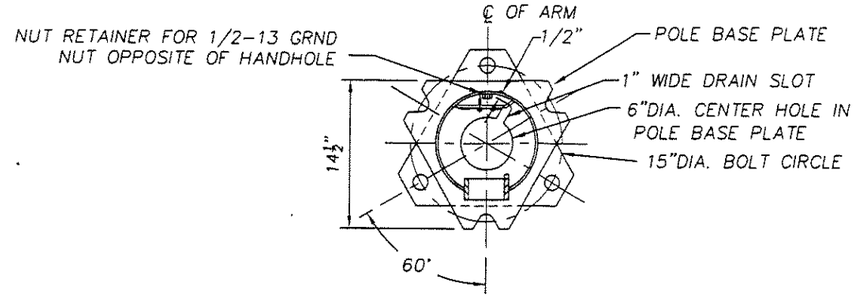

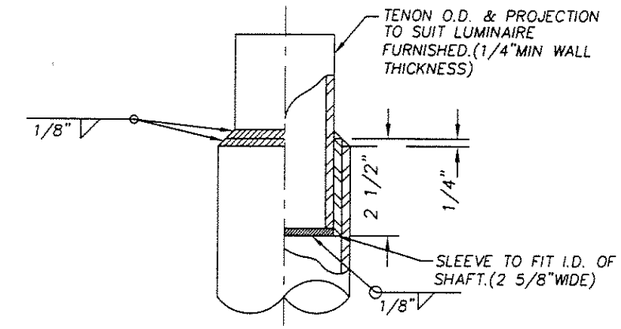

TENON TOP FOR DES.71035-Y41

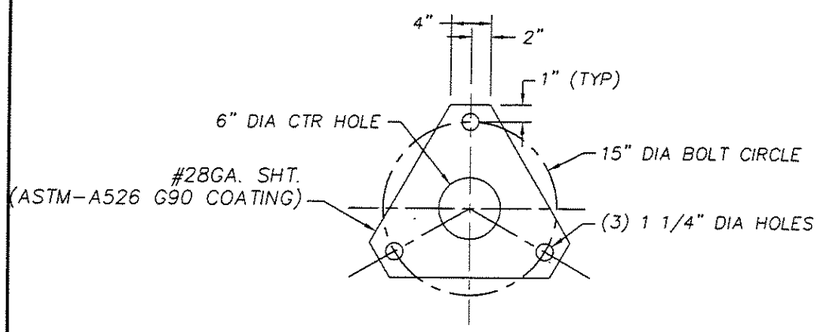

KEEPER PLATE DETAIL

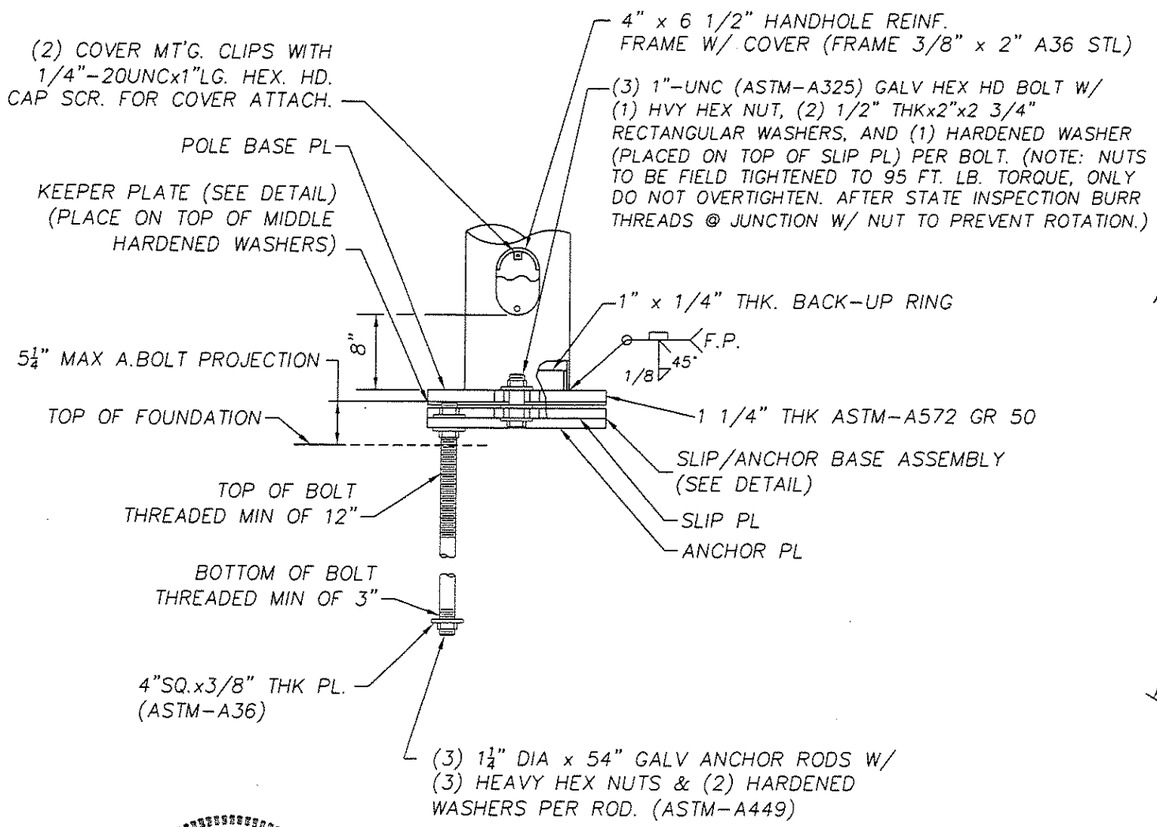

VIEW A-A

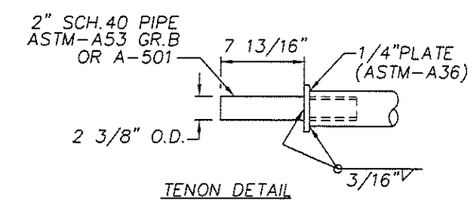

TENON DETAIL

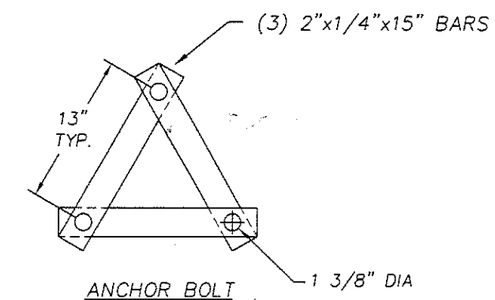

ANCHOR BOLT TEMPLATE DETAIL
(TWO SETS REQ'D PER POLE UNFINISHED)
(LOCATE 6" FROM TOP & ABOVE SQ. WASHERS@ BOTTOM)

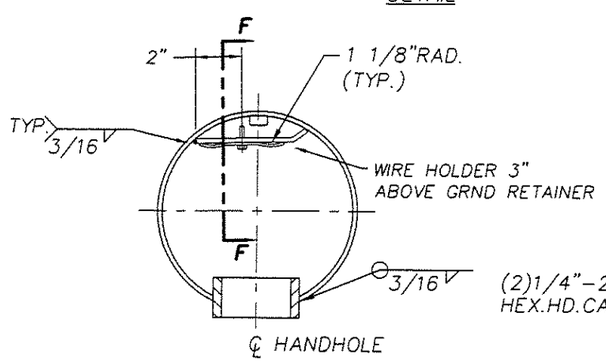

CONDUCTOR ATTACHMENT

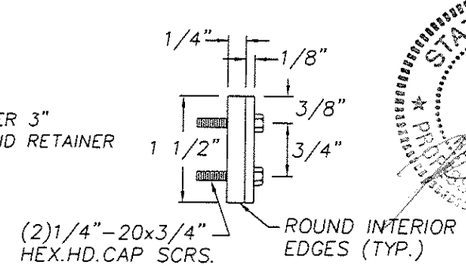

SECTION "F-F"

STATE OF OHIO
JOHN M. FRITZ
E-62406
PROFESSIONAL ENGINEER
4/15/04

APPROVED
Manufacturer's Pole Plan
Approved For Listing As A
Pre-Approved Drawing
WSDOT Bridge & Structures Office
By GB Date 4/6/2004

REVISIONS

40' NOM. STEEL POLE W/ SINGLE & TWIN DAVIT TYPE 1 ARM
WASHINGTON DOT

LOF ____ ENG.REF.# 71035-B7 R20
REQ.# ____ S.O.# ____ CAD# ____

Union Metal CORPORATION

R02

DRAWN LCV
DATE 10/10/03
CHECKED GXC

DRAWING NO. 71035-B39
SHEET 2 OF 2

ORIGINAL