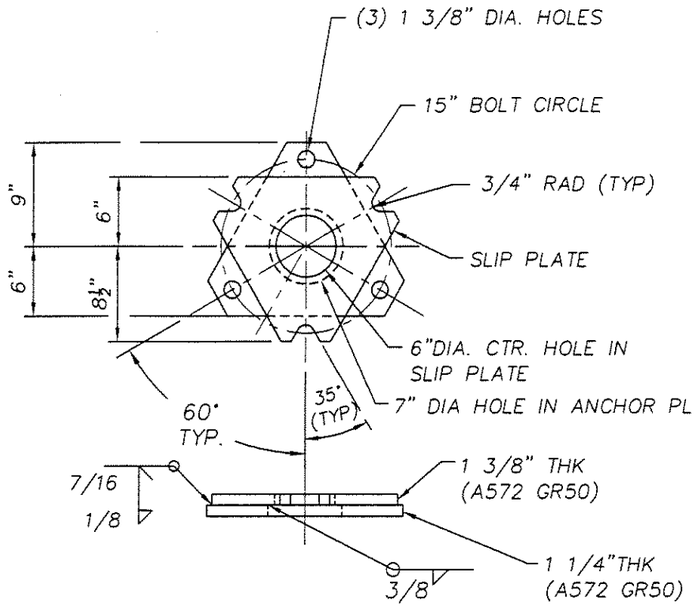

SLIP/ANCHOR BASE ASSEMBLY

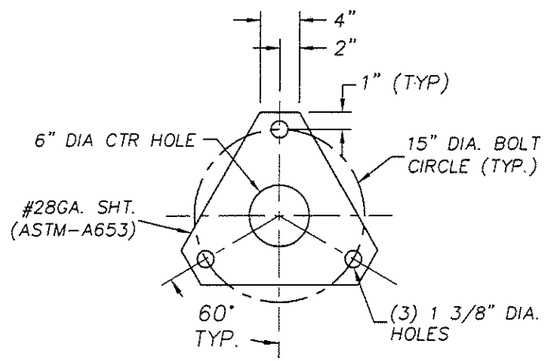

KEEPER PLATE DETAIL

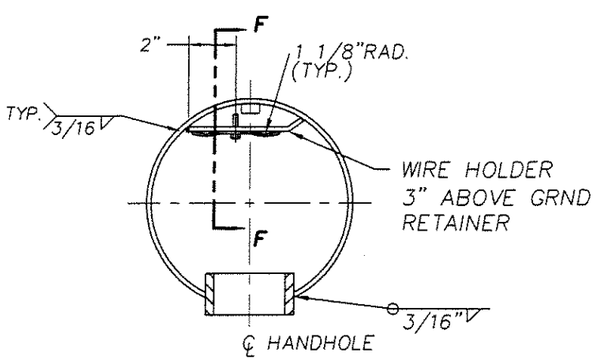

CONDUCTOR ATTACHMENT

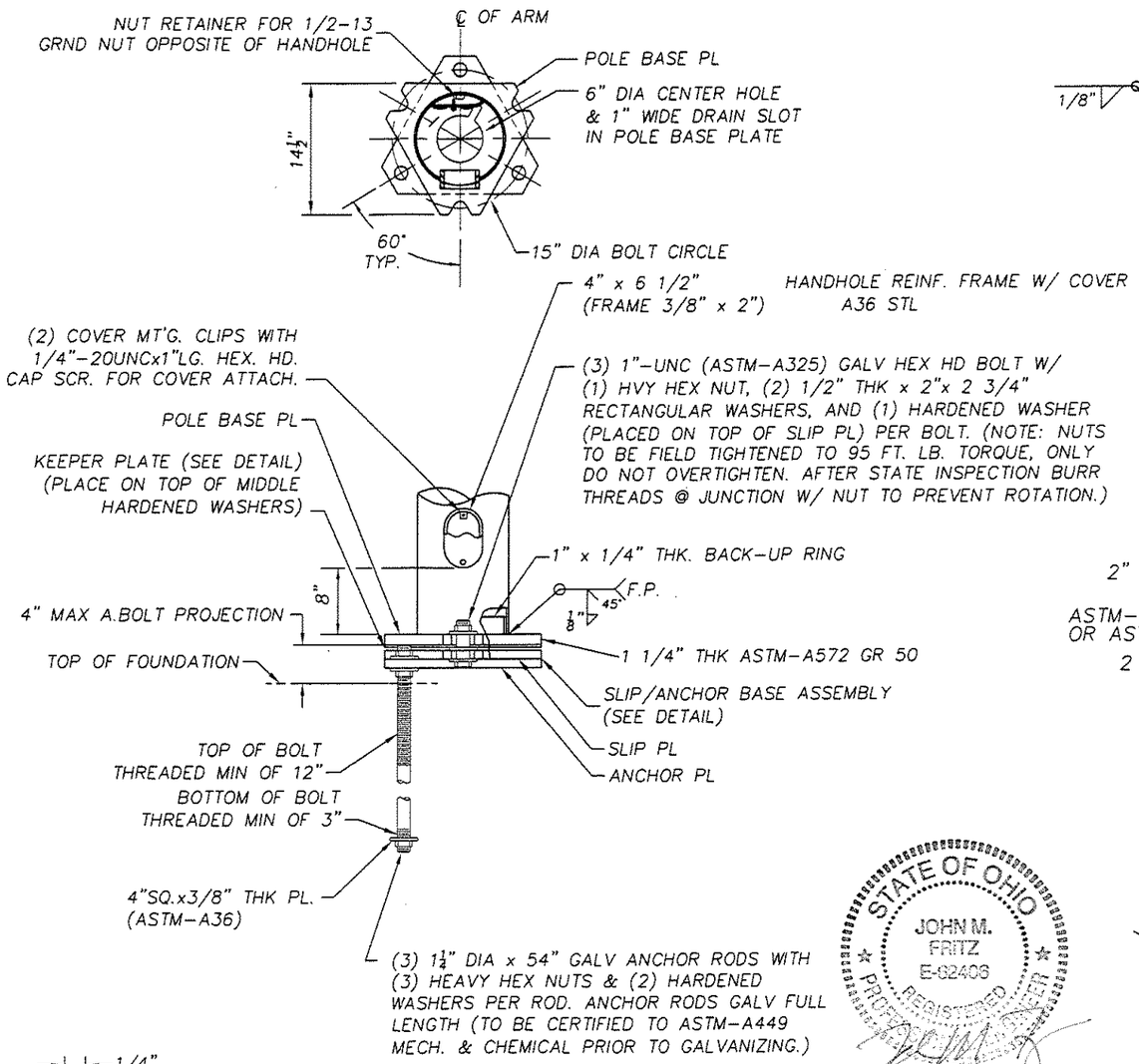

VIEW A-A

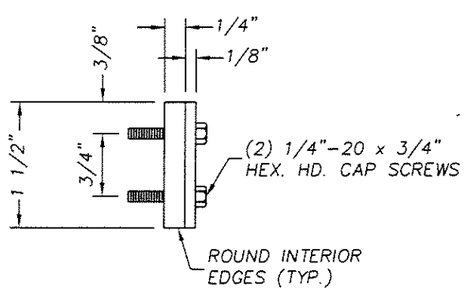

SECTION F-F

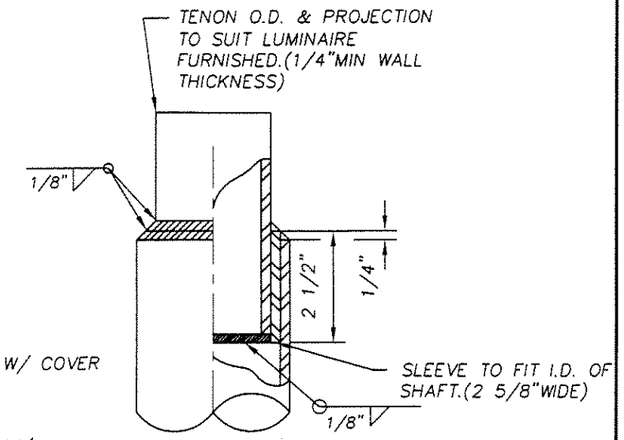

TENON TOP FOR DES.71035-B38-Y1

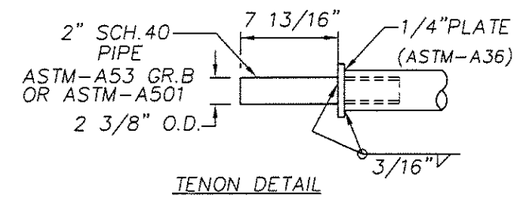

TENON DETAIL

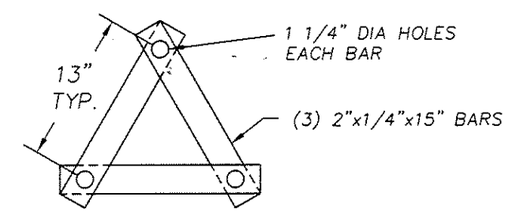

ANCHOR BOLT TEMPLATE DETAIL

(TWO SETS REQ'D PER POLE, UNFINISHED)

LOCATE 6" FROM TOP & ABOVE SQ. WASHERS @ BOTTOM

STATE OF OHIO
JOHN M. FRITZ
E-62406
REGISTERED PROFESSIONAL ENGINEER
4/15/04

APPROVED
~~Manufacturer's Pole Plan~~
Approved For Listing As A
Pre-Approved Drawing
~~WSDOT Bridge & Structures Office~~
By GB Date 4/6/2004

REVISIONS

50' NOM. STEEL POLE W/ SINGLE & TWIN DAVIT TYPE I ARM
WASHINGTON DOT

LOF ---- ENG.REF.# 71035-B6 R16
REQ.# _____ S.O.# ---- CAD# _____

Union Metal CORPORATION R02

DRAWN LCV
DATE 10/9/03
CHECKED CXC

DRAWING NO. 71035-B38
SHT. 2 OF 2

ORIGINAL