NOTES:

1. SEE STANDARD PLAN C-8 FOR DETAILS AND DIMENSIONS NOT SHOWN.
2. ALL PINS SHALL HAVE 18" MIN. PENETRATION INTO GROUND.
3. PLANE #1 (SEE SURFACE GEOMETRY DETAIL) BEGINS ALONG THE UPPER ANGLE OF THE TYPE 2 TRAFFIC BARRIER SHAPE (A,B), AND TRAVELS THROUGH THE STRUCTURE TO THE CENTER OF THE FOOTING (C,D).
4. FACET #2 (SEE SURFACE GEOMETRY DETAIL) BEGINS ALONG THE LOWER ANGLE OF THE TYPE 2 TRAFFIC BARRIER SHAPE (W,X), AND TWISTS TO HORIZONTAL AT THE FRONT OF THE STRUCTURE (Y,Z).

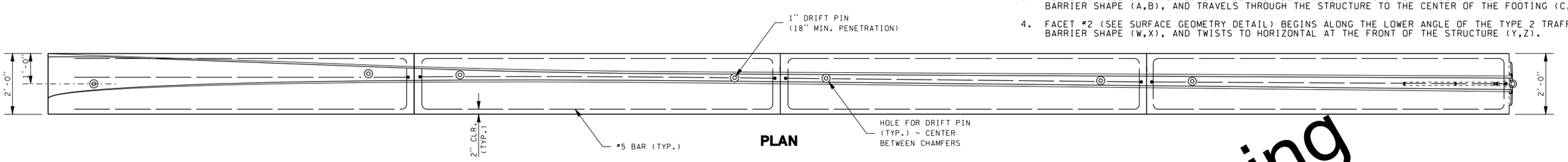

PLAN

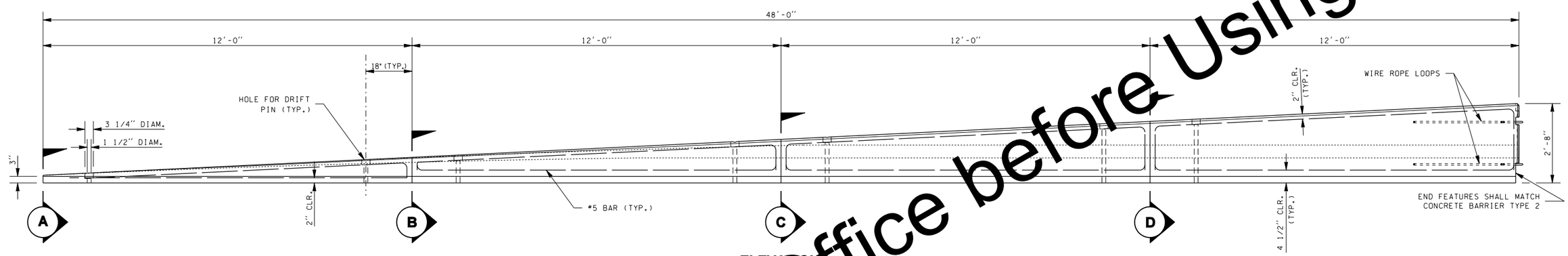

ELEVATION

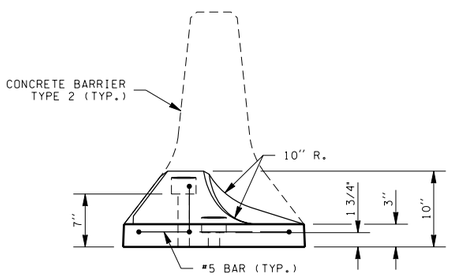

SECTION A

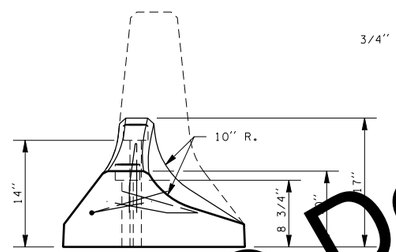

SECTION B

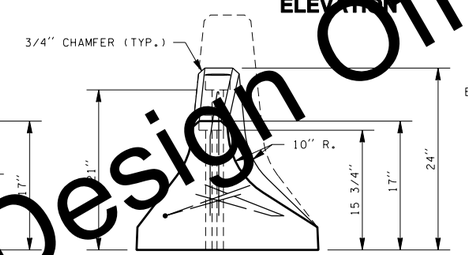

SECTION C

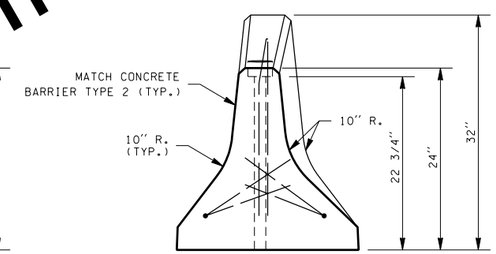

SECTION D

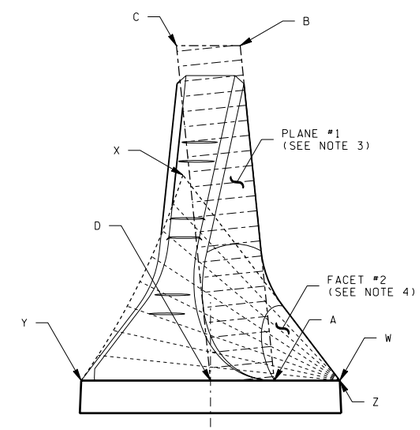

SURFACE GEOMETRY DETAIL

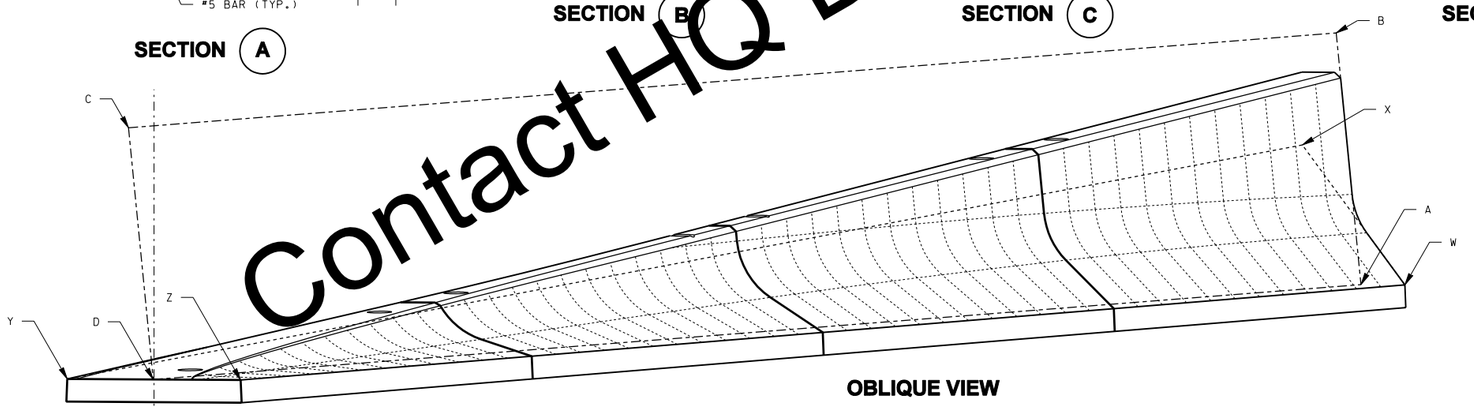

OBLIQUE VIEW

LOW SPEED CONCRETE BARRIER TERMINAL

Contact HQ Design Office before Using

FILE NAME	TB-4.DGN									PLOT1
TIME	01:11:09 PM				REGION NO.	STATE	FED.AID PROJ.NO.		Washington State Department of Transportation	
DATE	06/22/2005				10	WASH				
PLOTTED BY	sujkam				JOB NUMBER					SHEET
DESIGNED BY										OF
ENTERED BY										
CHECKED BY					CONTRACT NO.		LOCATION NO.			SHEETS
PROJ. ENGR.										
REGIONAL ADM.		REVISION	DATE	BY				DATE P.E. STAMP BOX	DATE P.E. STAMP BOX	