APPROVED
Manufacturer's Pole Plan
Approved For Listing As A
Pre-Approved Drawing
WSDOT Bridge & Structures Office
By GB Date 6-20-2011

REV.	DESCRIPTION	BY	DATE
1A	UPDATED PER MARKUPS BY G. BEDI 08-11-08	DRK	08-13-08
1B	CHANGED "AFB" TO 6.5" BOTH POLES, CHANGED TAPER.	DRK	08-28-08
1C	REMOVED TAPER FROM TABLE	DRK	09-17-08
1D	CHANGED ANCHOR BOLT PER NEW STANDARD	CMK	04-19-10

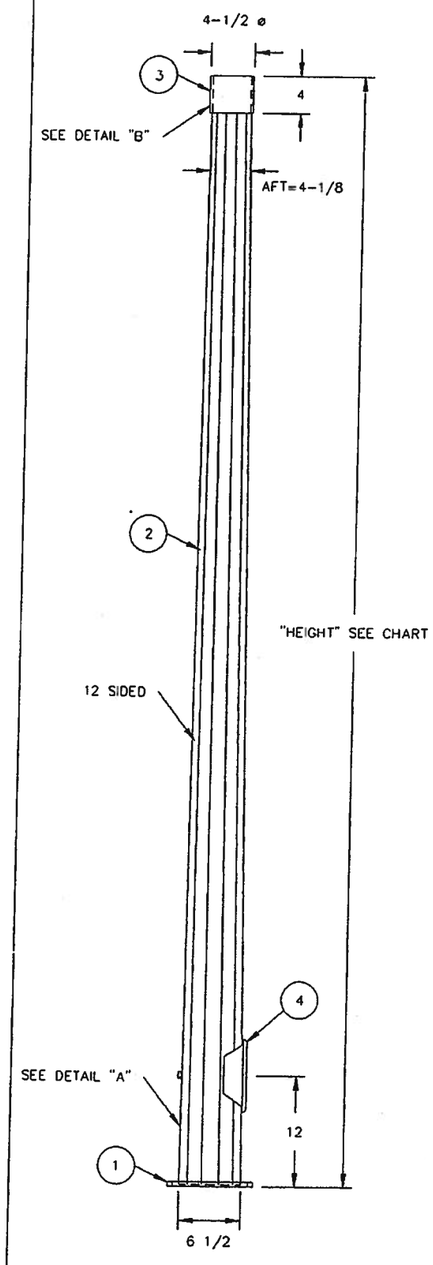

POLE ASSEMBLY
SCALE: 3/4"=1'-0"

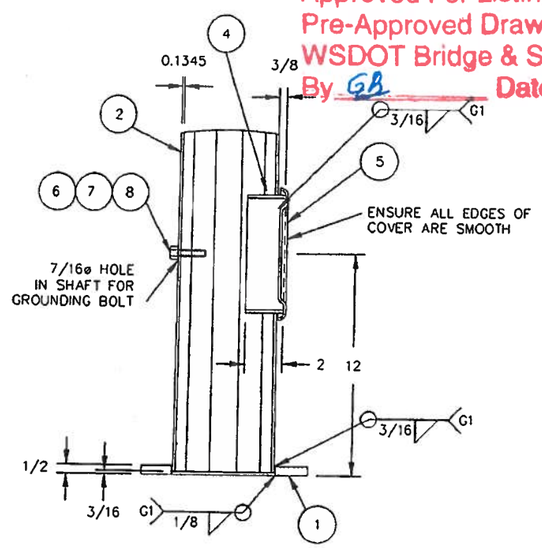

DETAIL "A"
SCALE: 1-1/2"=1'-0"

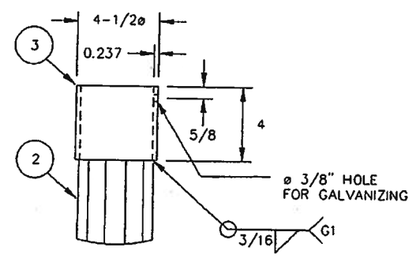

DETAIL "B"
SCALE: 1-1/2"=1'-0"

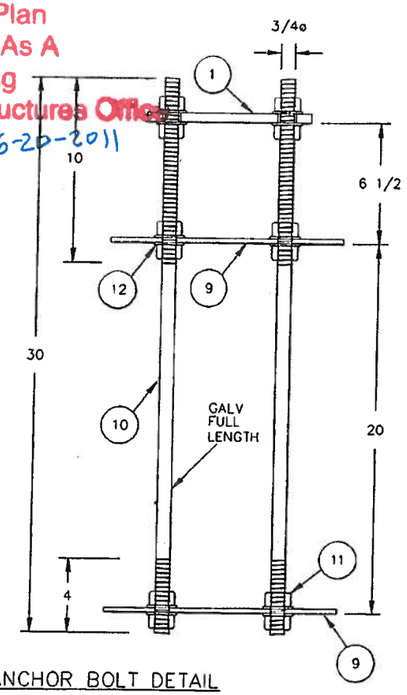

ANCHOR BOLT DETAIL
SCALE: 1-1/2"=1'-0"
*** 4 REQUIRED PER POLE

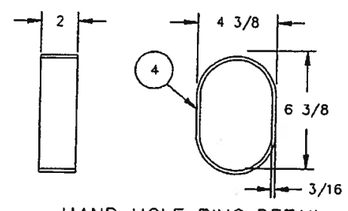

HAND HOLE RING DETAIL
230-RG-F02
SCALE: 1-1/2"=1'-0"

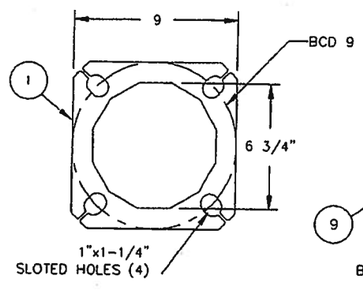

BASE PLATE DETAIL
SCALE: 1-1/2"=1'-0"

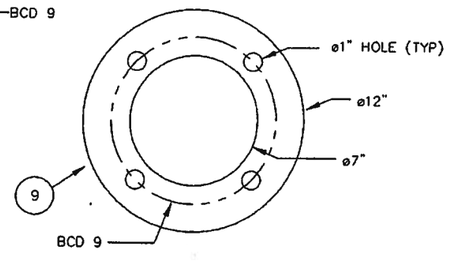

ANCHOR PLATE DETAIL
SCALE: 1-1/2"=1'-0"

BILL OF MATERIALS FOR POLE

#	QTY	PART NUMBER	DESCRIPTION	MATERIAL
1	1	SEE CHART	BASE PLATE, 9" SQ., 1/2" THICK	A572 GR.50
2	1	SEE CHART	12 SIDED SHAFT, 10GA THICK, AFT=4-1/8", SEE CHART	A1011 GR.50
3	1	240-TN-4.0-001	TENON, 4" SCH.40 PIPE, 4-1/2" OD, LENGTH 4"	A53 GR.B
4	1	230-RG-F02	HAND HOLE RING, 4-3/8" x 6-3/8" x 2", 3/16" THICK	ASTM A36
5	1	230-CO-F01	HAND HOLE COVER, 10GA THICK OR OPTIONAL ALUMINUM 6061.	A1011-50 or A36
6	4	154-FWN-S011	3/8" FLAT WASHER NARROW	18-8 SS
7	1	151-HRS-0.375-10	3/8"-16 HEX HEAD REGULAR BOLT, LEGTH 1-1/2", FULL THREAD	18-8 SS
8	2	153-HRN-S005	3/8"-16 HEX REGULAR NUT	18-8 SS
9	2	APS-PP-AP	1/4" THK ANCHOR PLATE	A572 GR.50
10	4		ø3/4"-10 X 30" DOUBLE-END STUD ANCHOR BOLT	F1554 GR.36
11	24		ø 3/4-10 HEAVY HEX NUT	A563 GRADE DH
12	24		ø3/4" DIAM FLAT WASHER	ASTM F463

PEDESTRIAN POLES

TYPE OF POLE	POLE HEIGHT	PART #	POLE WEIGHT	BASE PLATE PART #	SHAFT	
					PART #	LENGTH
TYPE PS	8 FT	9005-12-0001	65 Lbs	211-12-00003	200-12-00053	7' 7-13/16
TYPE I	10 FT	9005-12-0002	80 Lbs	211-12-00004	200-12-00054	9' 7-13/16

DESIGN CRITERIA:
2009 AASHTO STANDARD SPECIFICATIONS FOR STRUCTURAL SUPPORTS FOR HIGHWAY SIGNS, LUMINAIRIES AND TRAFFIC SIGNALS. DESIGN WIND SPEED 90mph.
WELDING:
WELDING OF STRUCTURES MUST BE IN ACCORDANCE WITH THE LATEST EDITION OF THE AWS STRUCTURAL WELDING CODE D1.1 STEEL. LONGITUDINAL SEAM WELD IS 60% MIN PENETRATION EXCEPT FOR 6 INCHES FROM END OF SECTION BASE PLATE IT IS 100% PENETRATION.
FINISH:
ALL COMPONENTS TO BE HOT DIP GALVANIZED AS PER ASTM A123/A153.
MISC:
ALL TAPERED TUBES ARE 8, & 12 SIDED OR ROUND.
*AFB-ACROSS THE FLATS AT THE BASE OF THE SHAFT. AFT-ACROSS THE FLATS AT THE TOP OF THE SHAFT
**0.1345" NOMINAL THICKNESS, 0.1265" MINIMUM THICKNESS.

THOMAS S. LACEY
STATE OF WASHINGTON
42082
REGISTERED
PROFESSIONAL ENGINEER
EXPIRES 11-17-12

TYPE PS & TYPE I PEDESTRIAN POLES STATE OF WASHINGTON

REVISION:	1D
SHEET SIZE:	B
APPROVED BY:	DAB
SCALE:	AS SHOWN
DATE:	07-24-08
DRAWN:	DRK
SHEET:	1 OF 1

American Pole Structures LLC.
Sedro Woolley, WA
PH: 360-855-0737 FX: 360-855-1692

WS-PP-03