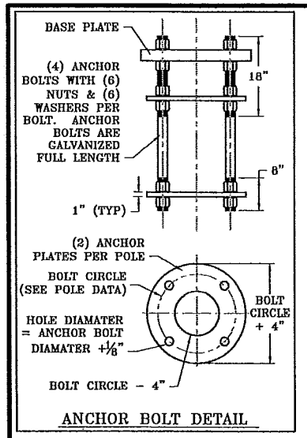

ANCHOR BOLT DETAIL

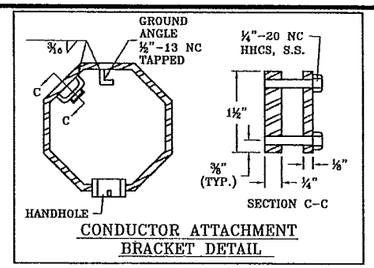

CONDUCTOR ATTACHMENT BRACKET DETAIL

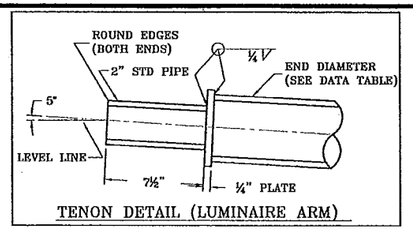

TENON DETAIL (LUMINAIRE ARM)

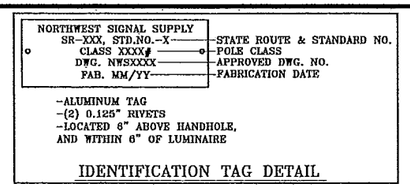

IDENTIFICATION TAG DETAIL

POLE DATA

ITEM	POLE CLASS (RESULTANT HORIZONTAL TENSION)						
	1900#	2700#	3700#	4600#	5600#	6300#	7200#
POLE GAGE	.25	.25	.25	.3125	.3125	.3125	.3125
BASE PLATE WIDTH	15"	15"	17"	18"	18"	20"	20"
ANCHOR BOLT CIRCLE	16"	16"	19"	20"	20"	22"	22"
POLE BASE DIA	10"	12"	14"	14"	15"	16"	17"
BASE PLATE THICKNESS	1 3/4"	2"	2 1/2"	2 1/2"	2 3/4"	2 3/4"	3"
ANCHOR BOLT SIZE	1"x36"	1 1/4"x60"	1 3/8"x60"	1 1/2"x60"	1 1/2"x60"	1 3/4"x66"	1 3/4"x66"

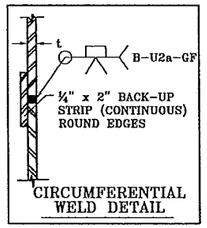

CIRCUMFERENTIAL WELD DETAIL

LUMINAIRE ARM DATA

ARM LENGTH (FT)	BASE DIAMETER (IN)	END DIAMETER (IN)	THICKNESS (IN)	TOTAL LENGTH (FT)
6	5.75	4	.188	11.5
8	5.75	3.75	.188	13.5
10	5.75	3.5	.188	15.5
12	5.75	3.25	.188	17.5
14	5.75	3	.188	19.5
16	5.75	2.75	.188	21.5

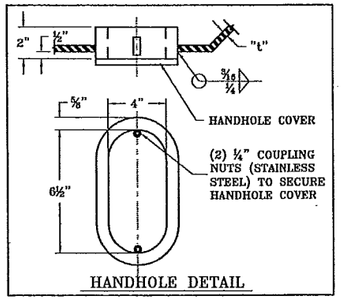

HANDHOLE DETAIL

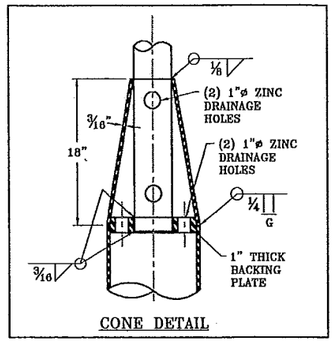

CONE DETAIL

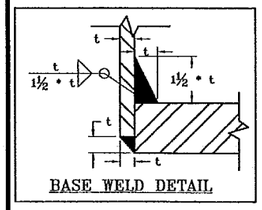

BASE WELD DETAIL

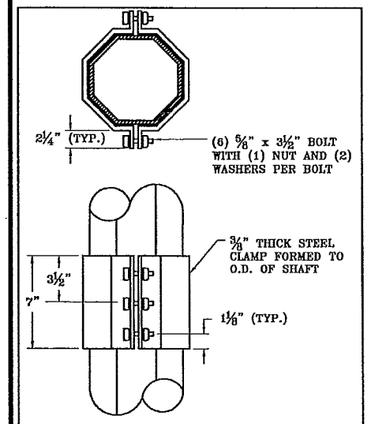

STRAIN CLAMP DETAIL

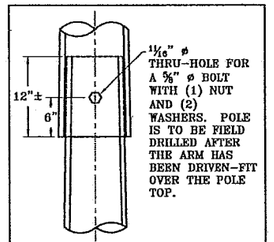

SLIP-FIT DETAIL

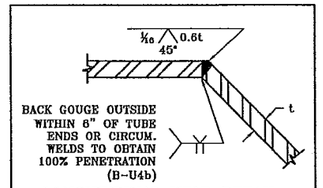

LONGITUDINAL WELD DETAIL

TWO PER TUBE, @ 180 DEGREES

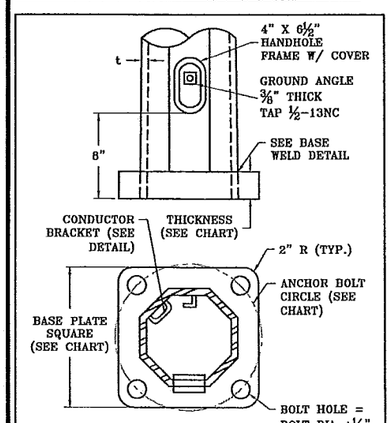

POLE BASE DETAIL

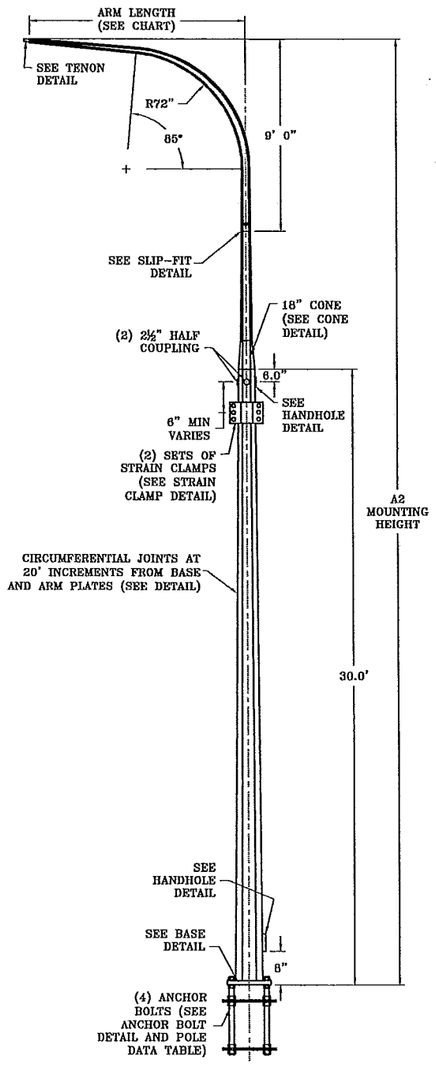

TYPE V

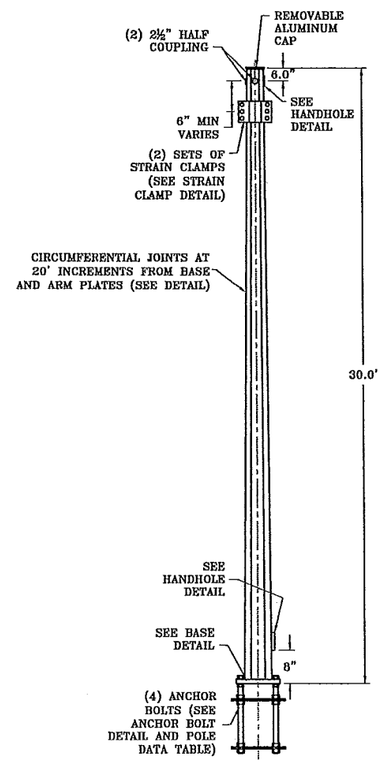

TYPE IV

APPROVED

Manufacturer's Pole Plan Approved For Listing As A Pre-Approved Drawing
WSDOT Bridge & Structures Office
By GB **Date** 8/6/2008

POLE SCHEDULE

INTERSECTION:

POLE #	CLASS	A2	LUM. LEN.

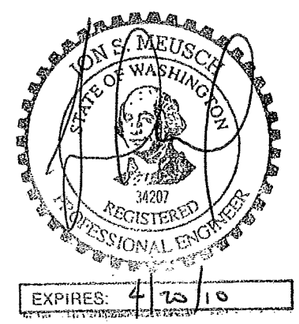

NOTES:

DESIGN CRITERIA
2001 AASHTO STANDARD SPECIFICATIONS FOR STRUCTURAL SUPPORTS FOR HIGHWAY SIGNS, LUMINAIRES, AND TRAFFIC SIGNALS.
-90 MPH 3 SECOND GUST
-50 YEAR DESIGN LIFE/RECURRENCE INTERVAL

GENERAL
-POLE AND MAST ARMS SHALL BE OCTAGONAL IN CROSS SECTION. POLE SHAFT SHALL HAVE TAPER OF 0.14 IN/FT.
-FABRICATION SHALL CONFORM TO 2001 AASHTO STANDARD SPECIFICATIONS FOR STRUCTURAL SUPPORTS FOR HIGHWAY SIGNS, LUMINAIRES, AND TRAFFIC SIGNALS AND AWS D1.1 STRUCTURAL STEEL WELDING CODE.

MATERIALS
-ALL STEEL IN TUBES, BASE PLATES, FLANGE PLATES, GUSSET PLATES & HANDHOLE FRAMES SHALL CONFORM TO ASTM A572 GR50.
-ANCHOR BOLTS SHALL CONFORM TO ASTM F1554 GR 105, NUTS SHALL CONFORM TO ASTM A563 GR DH HEAVY HEX, WASHERS SHALL CONFORM TO ASTM F436 TYPE I.
-ANCHOR PLATE SHALL CONFORM TO ASTM A36.
-CONNECTION BOLTS SHALL CONFORM TO ASTM A325, NUTS SHALL CONFORM TO ASTM A563 GR DH HEAVY HEX, WASHERS SHALL CONFORM TO ASTM F436 TYPE I.
-GALVANIZING SHALL CONFORM TO ASTM A123 & A153.
-HANDHOLE COVERS SHALL CONFORM TO ASTM A1011 GR50.
-ALL PIPE TENONS AND WIRE GUIDES SHALL CONFORM TO ASTM A53 GR B.
-FASTENERS LESS THEN 1/2" IN DIAMETER SHALL BE STAINLESS STEEL OR BRASS.
-POLE CAPS SHALL BE CAST ALUMINUM.

NO.	REVISION	DATE
1	NEW BOARDER, MINOR DESIGN CHANGES	6/08

NORTHWEST SIGNAL SUPPLY, INC
12965 SW Herman Rd. - Tualatin, OR 97062
PH: 503-635-4351, FX: 503-635-4341
www.nwsignal.com

WSDOT TYPE IV & V STRAIN POLE STANDARD WITH TYPE I LUMINAIRE ARM

DESIGNED BY	DATE	CHECKED BY	DATE
D. EMSLIE	6/18/08	J. MEUSCH	6/27/08

DRAWING NUMBER
NWS3520
SHEET 1 OF 1
JOB NUMBER