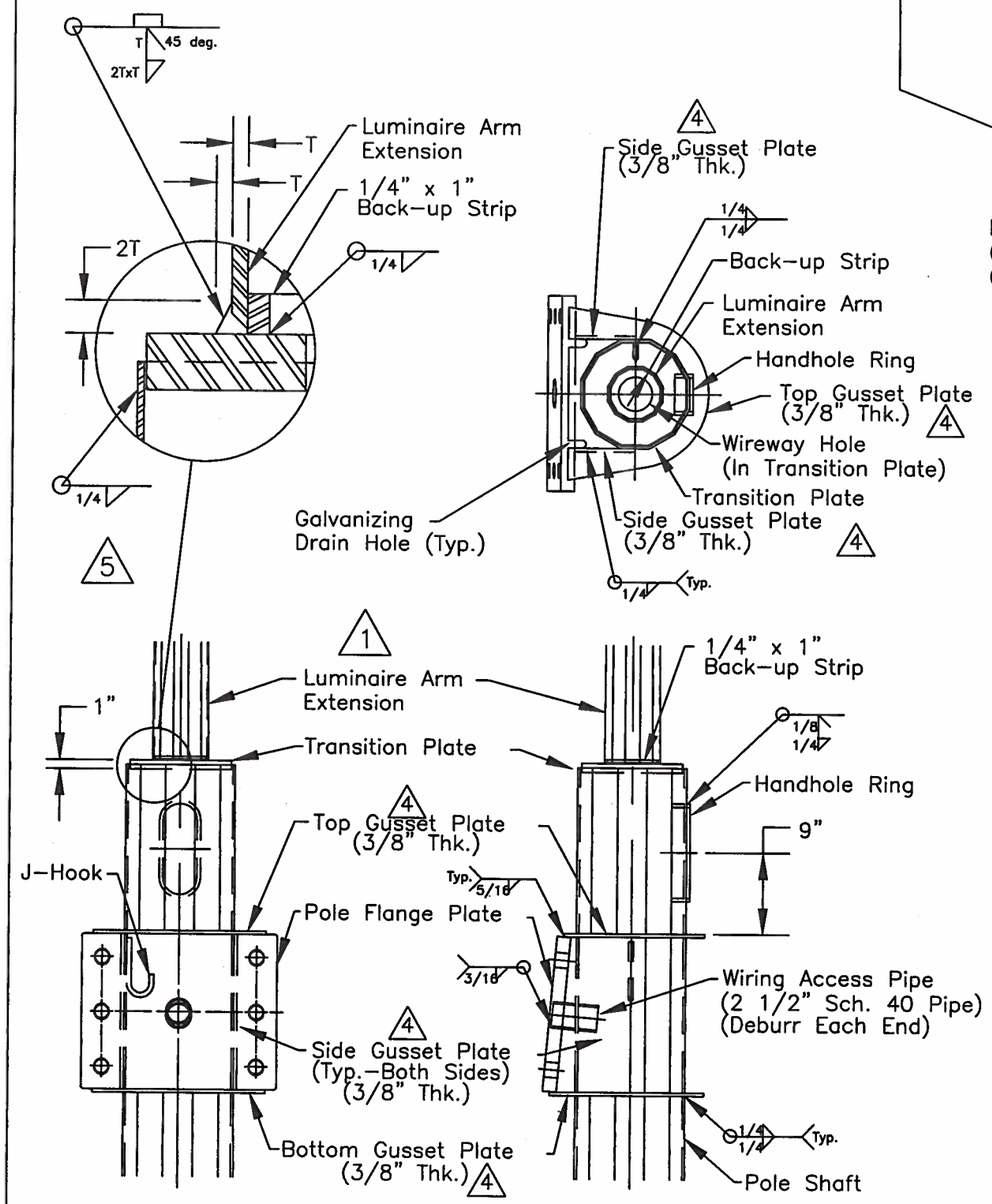

Type III Mast Head Detail

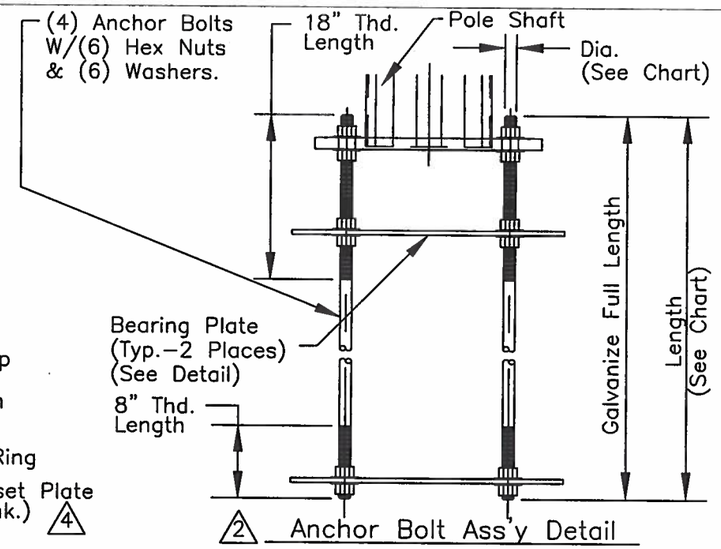

2 Anchor Bolt Ass'y Detail

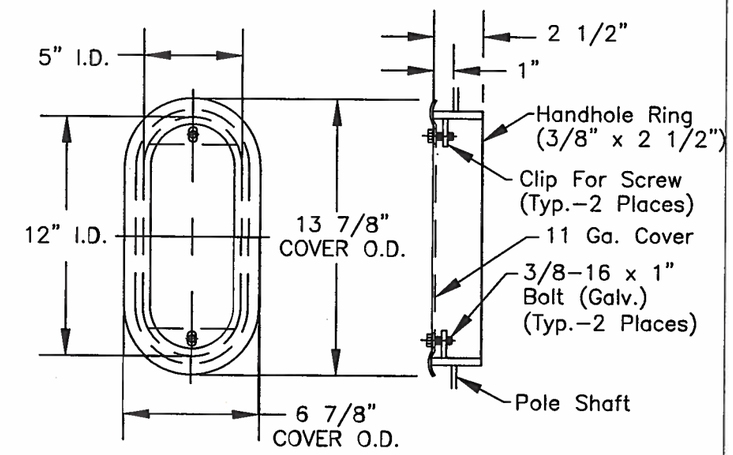

Handhole Ring Ass'y Detail 4

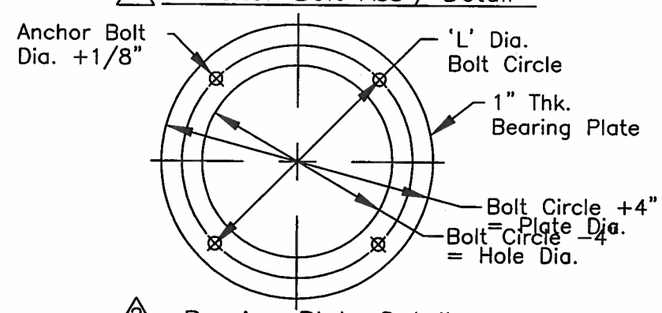

2 Bearing Plate Detail

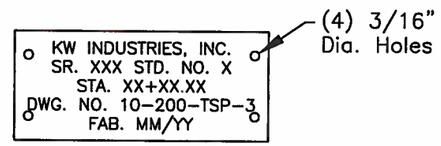

Identification Tag Detail

Material-14 Ga. Aluminum
Secure With (4) 1/8"
Stainless Steel Rivets. 2
Letters To Be Stamped or Etched.
Minimum Letter Size-3/16".

APPROVED
Manufacturer's Pole Plan
Approved For Listing As A
Pre-Approved Drawing
WSDOT Bridge & Structures Office
By GB Date 9-8-2011

REV:	DESCRIPTION:	BY:	DATE:
5	REVISED PER MARKUPS ON ERF# 8512	IF	3/23/2011
4	REVISED PER RETURNED MARKED-UP SUBMITTAL DRAWINGS.	JHG	11/17/2009
3	CHANGED REVISION NUMBER TO MATCH REVISION NUMBER ON SHT. 1 OF 3 PER WASHINGTON D.O.T. REQUEST.	JHG	11/5/2009
2	REVISED PER RETURNED MARKED-UP SUBMITTAL DRAWINGS.	JHG	8/24/2009
1	REVISED AS REQ'D. CHANGED LUMINAIRE ARM EXTENSION SHAFT MOUNTING TYPE FROM TELESCOPE MOUNTING TO BUTT-WELD MOUNTING W/BACK-UP STRIP.	JHG	2/19/2009

KW
909 INDUSTRIAL BLVD. •SUGAR LAND, TEXAS 77478

STATE OF WASHINGTON
TYPE III-T TRAFFIC SIGNAL STRUCTURES

SHT. 3 OF 3

DRAWN BY:	DATE:	DRAWING NO.:	REV:
JHG	1/26/2009	10-200-TSP-3	5
APPROVED BY:	DATE:		

THOMAS S. LACH
STATE OF WASHINGTON
42082
REGISTERED PROFESSIONAL ENGINEER
5-25-11
EXPIRES 11-17-12