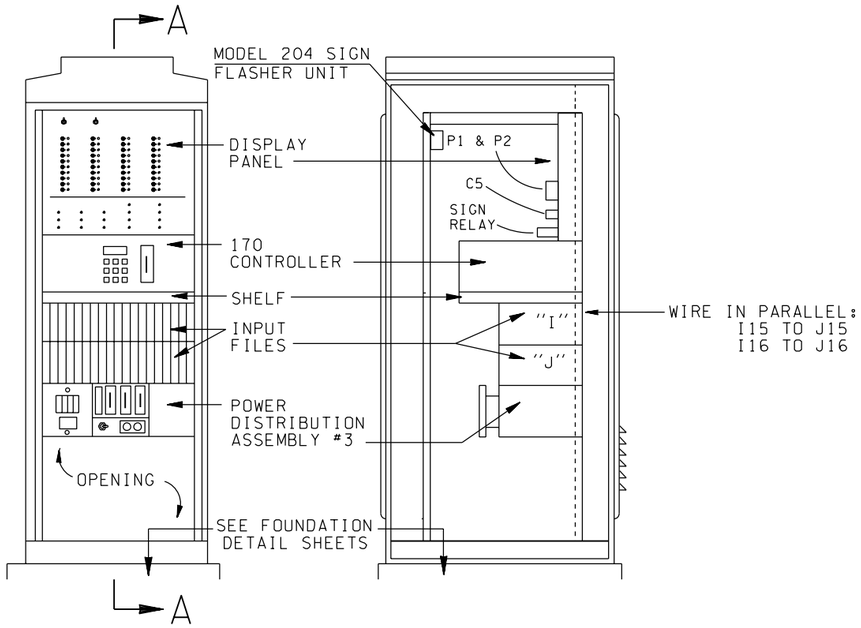

FRONT VIEW

SECTION A-A

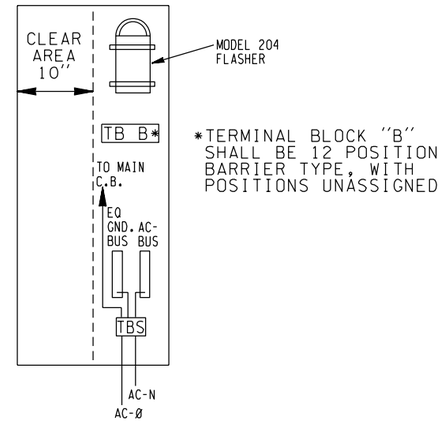

SERVICE PANEL DETAIL

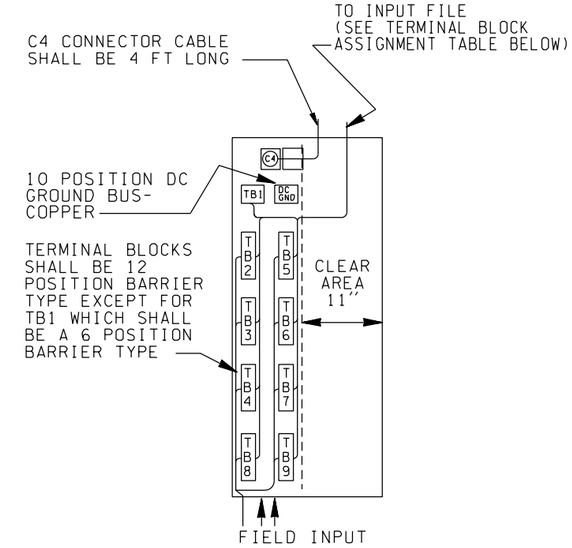

INPUT PANEL DETAIL

INPUT PANEL TERMINAL BLOCK ASSIGNMENT TABLE

POSITION	A	B	POSITION	A	B	POSITION	A	B	POSITION	A	B
TB1 1	T3-1	C4	TB4 1	FIELD DET*	I7D	TB6 1	FIELD DET*	I13D	TB8 1	FIELD DET*	J5D
TB1 2	TB1 1	C5,I15-1	TB4 2	#13	I7E	TB6 2	#25	I13E	TB8 2	#37	J5E
TB1 3	TB1 2	C6	TB4 3	FIELD DET*	I7J	TB6 3	FIELD DET*	I13J	TB8 3	FIELD DET*	J5J
TB1 4	N/A	N/A	TB4 4	#14	I7K	TB6 4	#26	I13K	TB8 4	#38	J5K
TB1 5	N/A	N/A	TB4 5	FIELD DET*	I8D	TB6 5	FIELD DET*	I14D	TB8 5	FIELD DET*	J6D
TB1 6	N/A	N/A	TB4 6	#15	I8E	TB6 6	#27	I14E	TB8 6	#39	J6E
TB2 1	FIELD DET*	I1D	TB4 7	FIELD DET*	I8J	TB6 7	FIELD DET*	I14J	TB8 7	FIELD DET*	J6J
TB2 2	#1	I1E	TB4 8	#16	I8K	TB6 8	#28	I14K	TB8 8	#40	J6K
TB2 3	FIELD DET*	I1J	TB4 9	FIELD DET*	I9D	TB6 9	FIELD DET*	J1D	TB8 9	N/A	N/A
TB2 4	#2	I1K	TB4 10	#17	I9E	TB6 10	#29	J1E	TB8 10	N/A	N/A
TB2 5	FIELD DET*	I2D	TB4 11	FIELD DET*	I9J	TB6 11	FIELD DET*	J1J	TB8 11	N/A	N/A
TB2 6	#3	I2E	TB4 12	#18	I9K	TB6 12	#30	J1K	TB8 12	N/A	N/A
TB2 7	FIELD DET*	I2J	TB5 1	FIELD DET*	I10D	TB7 1	FIELD DET*	J2D	TB9 1	AUDIO IN	C2-A
TB2 8	#4	I2K	TB5 2	#19	I10E	TB7 2	#31	J2E	TB9 2	(FROM CENTRAL)	C2-B
TB2 9	FIELD DET*	I3D	TB5 3	FIELD DET*	I10J	TB7 3	FIELD DET*	J2J	TB9 3	AUDIO OUT	C2-C
TB2 10	#5	I3E	TB5 4	#20	I10K	TB7 4	#32	J2K	TB9 4	(TO CENTRAL)	C2-E
TB2 11	FIELD DET*	I3J	TB5 5	FIELD DET*	I11D	TB7 5	FIELD DET*	J3D	TB9 5	N/A	N/A
TB2 12	#6	I3K	TB5 6	#21	I11E	TB7 6	#33	J3E	TB9 6	N/A	N/A
TB3 1	FIELD DET*	I4D	TB5 7	FIELD DET*	I11J	TB7 7	FIELD DET*	J3J	TB9 7	N/A	N/A
TB3 2	#7	I4E	TB5 8	#22	I11K	TB7 8	#34	J3K	TB9 8	N/A	N/A
TB3 3	FIELD DET*	I4J	TB5 9	FIELD DET*	I12D	TB7 9	FIELD DET*	J4D	TB9 9	N/A	N/A
TB3 4	#8	I4K	TB5 10	#23	I12E	TB7 10	#35	J4E	TB9 10	N/A	N/A
TB3 5	FIELD DET*	I5D	TB5 11	FIELD DET*	I12J	TB7 11	FIELD DET*	J4J	TB9 11	N/A	N/A
TB3 6	#9	I5E	TB5 12	#24	I12K	TB7 12	#36	J4K	TB9 12	N/A	N/A
TB3 7	FIELD DET*	I5J									
TB3 8	#10	I5K									
TB3 9	FIELD DET*	I6D									
TB3 10	#11	I6E									
TB3 11	FIELD DET*	I6J									
TB3 12	#12	I6K									

LEGEND

- TH THERMOSTAT
- CIRCUIT BREAKER
- R RECEPTACLE
- RELAY COIL
- S SIGN RELAY COIL
- T TRANSFER RELAY COM.
- RELAY, CONTACT N.C.
- RELAY, CONTACT N.O.
- SURGE PROTECTION
- SWITCH
- SWITCH, N.C.
- DC GROUND
- EQUIPMENT GROUND
- TR TRANSFER RELAY
- SR SIGN RELAY

CABINET ONE LINE DIAGRAM - POWER

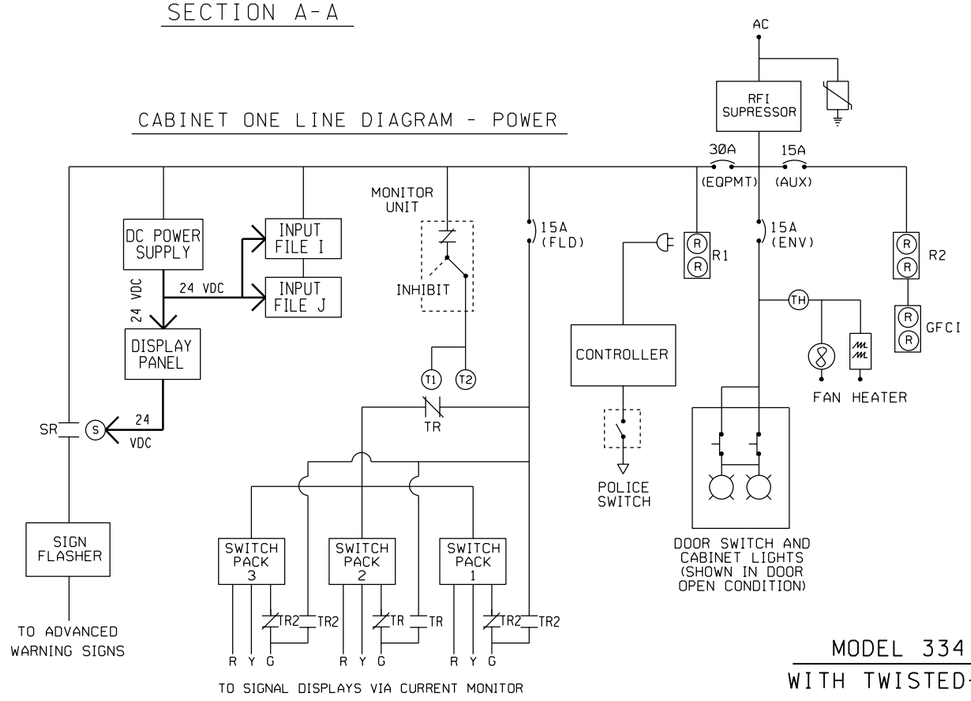

INPUT FILE (REAR VIEW)

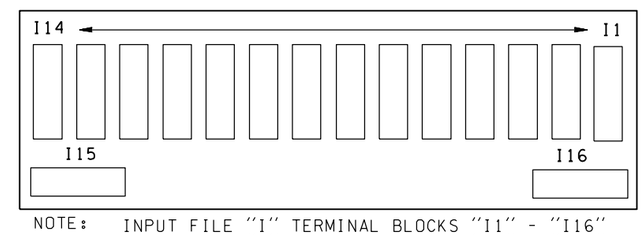

NOTE: INPUT FILE "I" TERMINAL BLOCKS "I1" - "I16"
INPUT FILE "J" TERMINAL BLOCKS "J1" - "J16"

MODEL 334 CABINET DETAILS
WITH TWISTED-PAIR COMMUNICATION

SHEET 1 OF 3

MASTER DETAIL REVISED 08/09/06

T:\414124\ITS\master detail_ Expanded Levels\Datastation-1.dgn

TIME	11:07:12 AM
DATE	9/10/2012
PLOTTED BY	mostagh
DESIGNED BY	
ENTERED BY	
CHECKED BY	
PROJ. ENGR.	
REGIONAL ADM.	

REVISION | DATE | BY

REGION NO. 10 | STATE WASH | FED.AID PROJ.NO.

JOB NUMBER

CONTRACT NO. | LOCATION NO.

P.E. STAMP BOX DATE

P.E. STAMP BOX DATE

Washington State Department of Transportation

Plot 1

SHEET OF SHEETS

CONNECTOR C1P AND C1S

PIN	CONNECT TO	FUNCTION	PIN	CONNECT TO	FUNCTION	PIN	CONNECT TO	FUNCTION	PIN	CONNECT TO	FUNCTION
1	DC GRD	DC GROUND	27	NC	NA	53	DP 55	DET 15	79	DP 77/C4-6	DET37/CM1G
2	C6-1	SWPK1-RED	28	NC	NA	54	DP 56	DET 16	80	DP 78/C4-7	DET38/CM3R
3	C6-2	SWPK1-GRN	29	NC	NA	55	DP 57	DET 17	81	DP 79/C4-8	DET39/CM3Y
4	C6-3	SWPK2-RED	30	NC	NA	56	DP 58	DET 18	82	DP 80/C4-9	DET40/CM3G
5	C6-4	SWPK2-YEL	31	NC	NA	57	DP 59	DET 19	83	C5-1	DP REMOTE
6	C6-5	SWPK2-GRN	32	NC	NA	58	DP 60	DET 20	84	C5-2	NA
7	C6-6	SWPK3-RED	33	NC	NA	59	DP 61	DET 21	85	C5-3	DP TRAFFIC
8	C6-7	SWPK3-YEL	34	NC	NA	60	DP 62	DET 22	86	C5-4	DP CLOCK
9	C6-8	SWPK3-GRN	35	NC	NA	61	DP 63	DET 23	87	C5-5	DP TELEMETRY
10	NC	NA	36	NC	NA	62	DP 64	DET 24	88	C5-6	DP ECHO
11	NC	NA	37	C6-9	SWPK1-YEL	63	C4-1	CM2-RED	89	C5-7	DP CONFLICT
12	NC	NA	38	NC	NA	64	C4-2	CM2-YEL	90	C5-8	DP DET FAILED
13	NC	NA	39	DP 41	DET 1	65	C4-3	CM2-GRN	91	C5-9	DP RED L1
14	I15-4	INPUT GND	40	DP 42	DET 2	66	PC-3	POLICE CONTROL	92	DC GND	OUTPUT GND
15	NC	NA	41	DP 43	DET 3	67	DP 65	DET 25	93	C5-10	SIGN-AUTO/DP METER
16	NC	NA	42	DP 44	DET 4	68	DP 66	DET 26	94	C5-11	DP RED L2
17	NC	NA	43	DP 45	DET 5	69	DP 67	DET 27	95	C5-12	DP YEL L2
18	NC	NA	44	DP 46	DET 6	70	DP 68	DET 28	96	C5-13	DP GRN L2
19	NC	NA	45	DP 47	DET 7	71	DP 69	DET 29	97	C5-14	DP YEL L1
20	NC	NA	46	DP 48	DET 8	72	DP 70	DET 30	98	C5-15	DP GRN L1
21	NC	NA	47	DP 49	DET 9	73	DP 71	DET 31	99	C5-16	DP RED L3
22	NC	NA	48	DP 50	DET 10	74	DP 72	DET 32	100	C5-17	DEP YEL L3
23	NC	NA	49	DP 51	DET 11	75	DP 73	DET 33	101	C5-18	DP GRN L3
24	NC	NA	50	DP 52	DET 12	76	DP 74	DET 34	102	I15-3	DET RESET
25	NC	NA	51	DP 53	DET 13	77	DP 75/C4-4	DET35/CM1R	103	C6-10	WATCHDOG
26	NC	NA	52	DP 54	DET 14	78	DP 76/C4-5	DET36/CM1Y	104	DC GND	INPUT GND

P1 CONNECTOR - FEMALE
INPUT FILE TO DISPLAY PANEL

P1 PIN#	CONNECTION	FUNCTION
1	DP1	DET. 1
2	DP2	DET. 2
3	DP3	DET. 3
4	DP4	DET. 4
5	DP5	DET. 5
6	DP6	DET. 6
7	DP7	DET. 7
8	DP8	DET. 8
9	DP9	DET. 9
10	DP10	DET.10
11	DP11	DET.11
12	DP12	DET.12
13	DP13	DET.13
14	DP14	DET.14
15	DP15	DET.15
16	DP16	DET.16
17	DP17	DET.17
18	DP18	DET.18
19	DP19	DET.19
20	DP20	DET.20
21	DP21	DET.21
22	DP22	DET.22
23	DP23	DET.23
24	DP24	DET.24
25	DP25	DET.25
26	DP26	DET.26
27	DP27	DET.27
28	DP28	DET.28
29	DP29	DET.29
30	DP30	DET.30
31	DP31	DET.31
32	DP32	DET.32
33	DP33	DET.33
34	DP34	DET.34
35	DP35	DET.35
36	DP36	DET.36
37	DP37	DET.37
38	DP38	DET.38
39	DP39	DET.39
40	DP40	DET.40
41	NC	NA
42	NC	NA
43	NC	NA
44	NC	NA
45	NC	NA
46	NC	NA
47	NC	NA
48	NC	NA
49	+24 VDC	POWER
50	LOGIC GND	GROUND

P2 CONNECTOR - MALE
DISPLAY PANEL TO C1

P2 PIN#	CONNECTION	FUNCTION
1	DP41	DET. 1
2	DP42	DET. 2
3	DP43	DET. 3
4	DP44	DET. 4
5	DP45	DET. 5
6	DP46	DET. 6
7	DP47	DET. 7
8	DP48	DET. 8
9	DP49	DET. 9
10	DP50	DET.10
11	DP51	DET.11
12	DP52	DET.12
13	DP53	DET.13
14	DP54	DET.14
15	DP55	DET.15
16	DP56	DET.16
17	DP57	DET.17
18	DP58	DET.18
19	DP59	DET.19
20	DP60	DET.20
21	DP61	DET.21
22	DP62	DET.22
23	DP63	DET.23
24	DP64	DET.24
25	DP65	DET.25
26	DP66	DET.26
27	DP67	DET.27
28	DP68	DET.28
29	DP69	DET.29
30	DP70	DET.30
31	DP71	DET.31
32	DP72	DET.32
33	DP73	DET.33
34	DP74	DET.34
35	DP75	DET.35
36	DP76	DET.36
37	DP77	DET.37
38	DP78	DET.38
39	DP79	DET.39
40	DP80	DET.40
41	NC	NA
42	NC	NA
43	NC	NA
44	NC	NA
45	NC	NA
46	NC	NA
47	NC	NA
48	NC	NA
49	NC	NA
50	NC	NA

SIGN SWITCH

CONNECT TO	FUNCTION
C5-23	DC GND
SR-7	SR COIL
C5-10	AUTO METER

SHOWN IN AUTOMATIC MODE

NOTE: SIGN SWITCH SHALL BE 3-POSITION STATIONARY TYPE WITH 10 A CONTACT RATING.

POLICE CONTROL SWITCH

CONNECT TO	FUNCTION
NC	NA
DC GND	DC GND
C1-66	POLICE CTRL

SHOWN IN ON MODE

NOTE: POLICE CONTROL SWITCH SHALL BE 2-POSITION STATIONARY TYPE WITH 10 A CONTACT RATING.

MODEL 204 FLASHER

CONNECT TO	FUNCTION		CONNECT TO	FUNCTION
T1-6	LOAD CIRCUIT # 2	8 7	T1-5	LOAD CIRCUIT # 1
AC -	AC NEUTRAL	10 9	GND	EARTH GROUND
NC	NO CONNECTION	12 11	T1-1	AC LINE

SIGN RELAY

CONNECT TO	FUNCTION	CONNECT TO	FUNCTION
SS-2	SIGN CONTROL	NC	NA
NC	NA	NC	NA
T2-7	AC+	T1-3	SIGN OFF FIELD
C5-24	+24 VDC	T1-1	SIGN ON FIELD

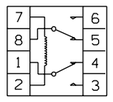

SHOWN DE-ENERGIZED (NOT METERING)

NOTE: RELAY SHALL OPERATE ON GROUND OUTPUT FROM 170 CONTROLLER. RELAY COIL SHALL DRAW LESS THAN 75 MILLIAMPERES.

RELAY SHALL BE DPDT AS SHOWN AND HAVE CONTACT RATING NOT LESS THAN 10 AMPS CONTINUOUS DUTY.

AC WIRING FROM SIGN RELAY TO PDA SHALL BE 14 AWG.

KEY TO ABBREVIATIONS

CB = CIRCUIT BREAKER
CM = CURRENT MONITOR
DP = DISPLAY PANEL
MU = MONITOR UNIT
NA = NOT ASSIGNED
NC = NOT CONNECTED
PC = POLICE CONTROL SWITCH
SR = SIGN RELAY
SS = SIGN SWITCH
SWPK = SWITCH PACK
TR = TRANSFER RELAY

C4 CONNECTOR (TO CURRENT MONITOR)

PIN	CONNECTION	FUNCTION
1	C1-63	CM2-RED
2	C1-64	CM2-YEL
3	C1-65	CM2-GRN
4	C1-77	CM1-RED
5	C1-78	CM1-YEL
6	C1-79	CM1-GRN
7	C1-80	CM3-RED
8	C1-81	CM3-YEL
9	C1-82	CM3-GRN
10	C1-36	NA
11	NC	NA
12	NC	NA
13	NC	NA
14	NC	NA
15	NC	NA
16	NC	NA
17	C1-70	NA
18	C1-71	NA
19	C1-72	NA
20	NC	NA
21	C5-19	NA
22	C5-20	NA
23	DC GND	DC GROUND
24	TB1-1B	+24 VDC

C5 CONNECTOR (TO DISPLAY PANEL)

PIN	CONNECTION	FUNCTION
1	C1-83	DP -REMOTE
2	C1-84	DP -NA
3	C1-85	DP -STANDBY TRAFFIC
4	C1-86	DP -STANDBY CLOCK
5	C1-87	DP -TELEMETRY
6	C1-88	DP -ECHO
7	C1-89	DP -CONFLICT
8	C1-90	DP -DET. FAILED
9	C1-91	DP -RED LANE 1
10	C1-93	DP -METERING, SS-3
11	C1-94	DP -RED LANE 2
12	C1-95	DP -YELLOW LANE 2
13	C1-96	DP -GREEN LANE 2
14	C1-97	DP -YELLOW LANE 1
15	C1-98	DP -GREEN LANE 1
16	C1-99	DP -RED LANE 3
17	C1-100	DP -YELLOW LANE 3
18	C1-101	DP -GREEN LANE 3
19	NC	NA
20	NC	NA
21	NC	NA
22	NC	NA
23	DC GND	SS-1
24	TB1-2B	+24 VDC

C6 CONNECTOR (TO PDA)

PIN	CONNECTION	FUNCTION
1	C1-2	SWPK1-RED
2	C1-3	SWPK1-GRN
3	C1-4	SWPK2-RED
4	C1-5	SWPK2-YEL
5	C1-6	SWPK2-GRN
6	C1-7	SWPK3-RED
7	C1-8	SWPK3-YEL
8	C1-9	SWPK3-GRN
9	C1-37	SWPK1-YEL
10	C1-103	WATCHDOG MU
11	NC	NA
12	NC	NA
13	NC	NA
14	NC	NA
15	NC	NA
16	NC	NA
17	NC	NA
18	NC	NA
19	NC	NA
20	NC	NA
21	NC	NA
22	NC	NA
23	DC GND	DC GROUND
24	TB1-3B	+24 VDC

SHEET 2 OF 3

MODEL 334 CABINET DETAILS
WITH TWISTED-PAIR COMMUNICATION

MASTER DETAIL REVISED 08/09/06

FILE NAME	T:\414124\ITS\master detail_ Expanded Levels\Datastation-1.dgn					
TIME	11:07:12 AM				REGION NO. 10	STATE WASH	FED.AID PROJ.NO.
DATE	9/10/2012					
PLOTTED BY	mostagh				JOB NUMBER	
DESIGNED BY						
ENTERED BY						
CHECKED BY					CONTRACT NO.	LOCATION NO.
PROJ. ENGR.						
REGIONAL ADM.		REVISION	DATE	BY		

P.E. STAMP BOX DATE

P.E. STAMP BOX DATE

Washington State Department of Transportation

Plot 2

SHEET OF SHEETS

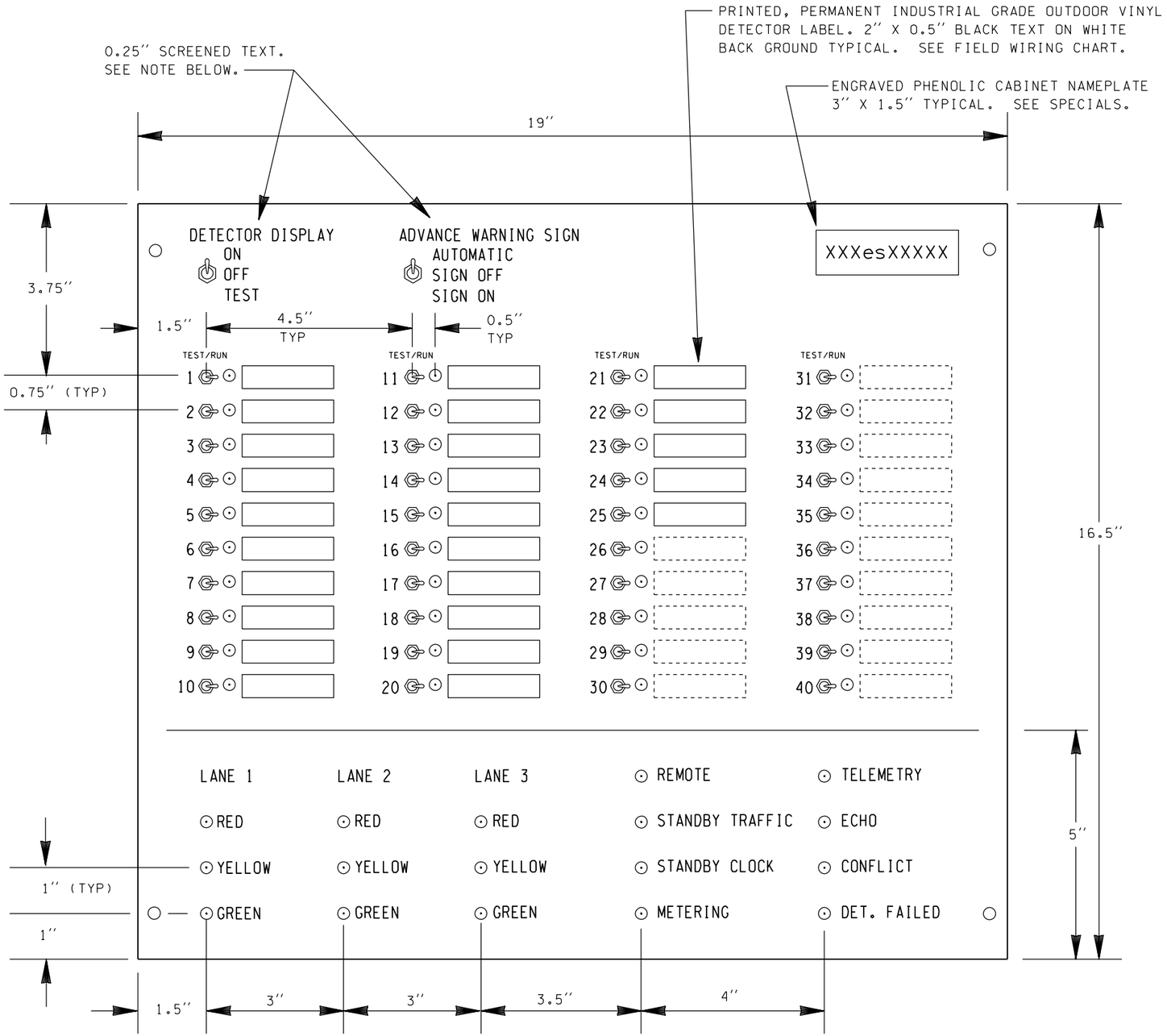

UNLESS OTHERWISE NOTED, ALL TEXT SHALL BE SCREENED DIRECTLY ON THE PANEL. TEXT SHALL BE 0.25" MINIMUM.

SHEET 3 OF 3

DISPLAY PANEL

NO SCALE

POWER DISTRIBUTION ASSEMBLY (PDA) #3

(REAR VIEW)

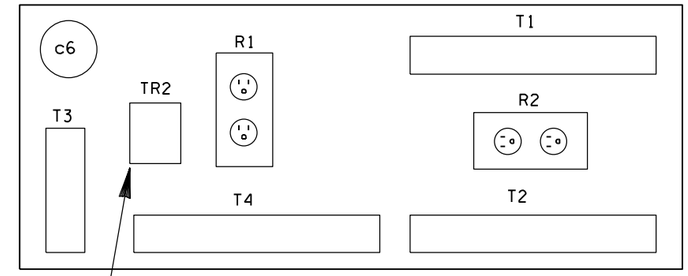

INSTALL MODEL 430 TRANSFER RELAY. WIRE AS SHOWN BELOW.

PDA #3 MODIFICATIONS

CONNECT:			FUNCTION
T2-8	TO	T4-6	TR OUTPUT TO FIELD GRN 2
T2-6	TO	MU-3	ENERGIZE TR WHEN MU IS NORMAL
T1-1, T1-2	TO	SR-3	FIELD OUTPUT - SIGN ON
T1-3, T1-4	TO	SR-4	FIELD OUTPUT - SIGN OFF

ADD TRANSFER RELAY #2 AS SHOWN.

TRANSFER RELAY

(FRONT PANEL OF PDA #3)

CONNECT TO	FUNCTION		CONNECT TO	FUNCTION
SWPK1-1	AC+ SUPPLY	7 / 8	SWPK2-7	GRN-2
CB 3	AC+	5 / 6	T4-6	GRN OUTPUT
NC	NA	3 / 4	TR-5	AC+
T2-6	MU-OK	1 / 2	T2-2	AC-

RC

SHOWN DE-ENERGIZED
ENERGIZED BY MONITOR UNIT NORMAL

TRANSFER RELAY #2

(MODEL 430)

CONNECT TO	FUNCTION		CONNECT TO	FUNCTION
SWPK3-7	GRN-3	7 / 8	SWPK1-7	GRN-1
T4-3	GRN OUTPUT	5 / 6	T4-9	GRN OUTPUT
CB3	AC+	3 / 4	TR2-3	AC+
T2-6	MU-OK	1 / 2	T2-2	AC-

RC

SHOWN DE-ENERGIZED
ENERGIZED BY MONITOR UNIT NORMAL

MASTER DETAIL REVISED 09/16/09

FILE NAME	T:\414124\ITS\master detail_ Expanded Levels\Datastation-1.dgn					
TIME	11:07:13 AM			REGION NO. 10	STATE WASH	FED.AID PROJ.NO.
DATE	9/10/2012					
PLOTTED BY	mostagh			JOB NUMBER		
DESIGNED BY						
ENTERED BY						
CHECKED BY				CONTRACT NO.		LOCATION NO.
PROJ. ENGR.						
REGIONAL ADM.		REVISION	DATE	BY		

P.E. STAMP BOX DATE

P.E. STAMP BOX DATE

Washington State Department of Transportation

Plot 3

SHEET OF SHEETS

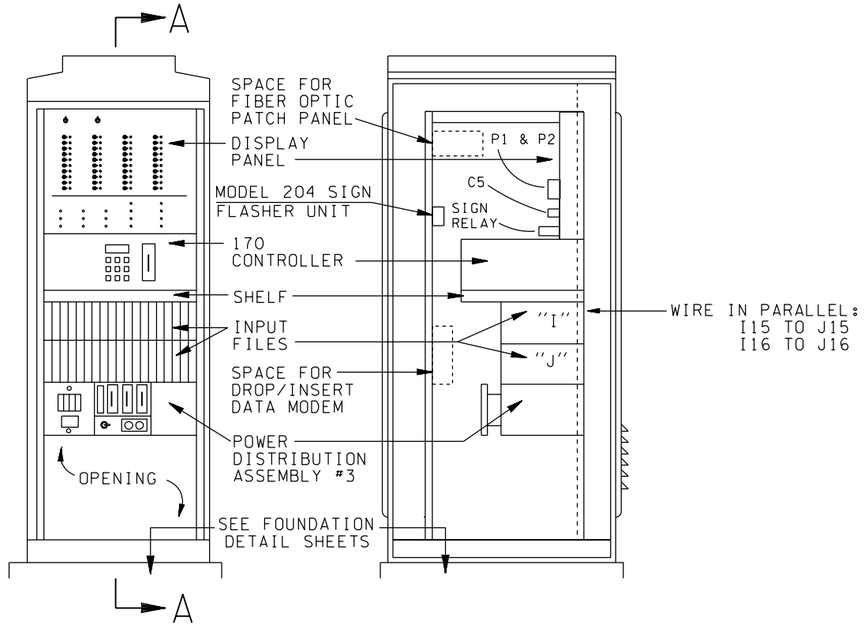

FRONT VIEW

SECTION A-A

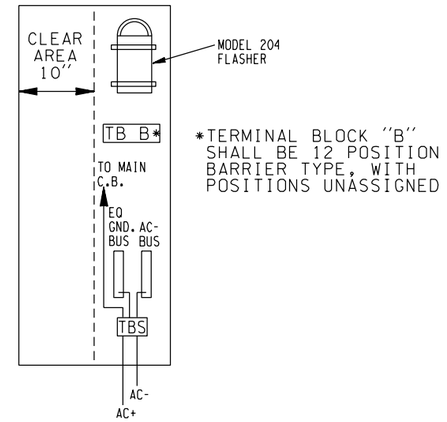

SERVICE PANEL DETAIL

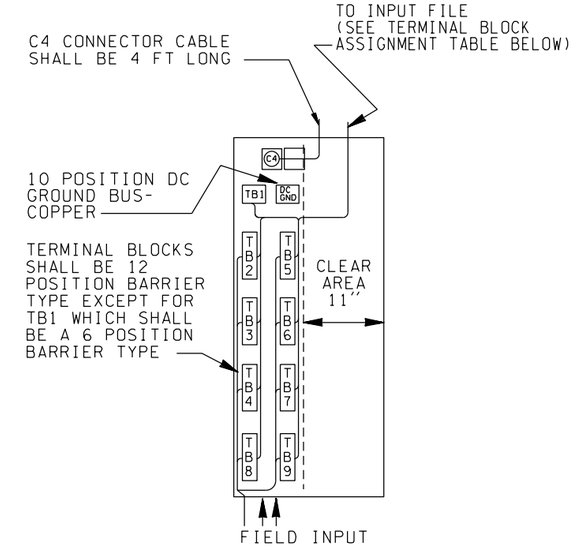

INPUT PANEL DETAIL

INPUT PANEL TERMINAL BLOCK ASSIGNMENT TABLE

POSITION	A	B	POSITION	A	B	POSITION	A	B	POSITION	A	B
TB1 1	T3-1	C4	TB4 1	FIELD DET*	I7D	TB6 1	FIELD DET*	I13D	TB8 1	FIELD DET*	J5D
TB1 2	TB1 1	C5,I15-1	TB4 2	#13	I7E	TB6 2	#25	I13E	TB8 2	#37	J5E
TB1 3	TB1 2	C6	TB4 3	FIELD DET*	I7J	TB6 3	FIELD DET*	I13J	TB8 3	FIELD DET*	J5J
TB1 4	N/A	N/A	TB4 4	#14	I7K	TB6 4	#26	I13K	TB8 4	#38	J5K
TB1 5	N/A	N/A	TB4 5	FIELD DET*	I8D	TB6 5	FIELD DET*	I14D	TB8 5	FIELD DET*	J6D
TB1 6	N/A	N/A	TB4 6	#15	I8E	TB6 6	#27	I14E	TB8 6	#39	J6E
TB2 1	FIELD DET*	I1D	TB4 7	FIELD DET*	I8J	TB6 7	FIELD DET*	I14J	TB8 7	FIELD DET*	J6J
TB2 2	#1	I1E	TB4 8	#16	I8K	TB6 8	#28	I14K	TB8 8	#40	J6K
TB2 3	FIELD DET*	I1J	TB4 9	FIELD DET*	I9D	TB6 9	FIELD DET*	J1D	TB8 9	N/A	N/A
TB2 4	#2	I1K	TB4 10	#17	I9E	TB6 10	#29	J1E	TB8 10	N/A	N/A
TB2 5	FIELD DET*	I2D	TB4 11	FIELD DET*	I9J	TB6 11	FIELD DET*	J1J	TB8 11	N/A	N/A
TB2 6	#3	I2E	TB4 12	#18	I9K	TB6 12	#30	J1K	TB8 12	N/A	N/A
TB2 7	FIELD DET*	I2J	TB5 1	FIELD DET*	I10D	TB7 1	FIELD DET*	J2D	TB9 1	N/A	N/A
TB2 8	#4	I2K	TB5 2	#19	I10E	TB7 2	#31	J2E	TB9 2	N/A	N/A
TB2 9	FIELD DET*	I3D	TB5 3	FIELD DET*	I10J	TB7 3	FIELD DET*	J2J	TB9 3	N/A	N/A
TB2 10	#5	I3E	TB5 4	#20	I10K	TB7 4	#32	J2K	TB9 4	N/A	N/A
TB2 11	FIELD DET*	I3J	TB5 5	FIELD DET*	I11D	TB7 5	FIELD DET*	J3D	TB9 5	N/A	N/A
TB2 12	#6	I3K	TB5 6	#21	I11E	TB7 6	#33	J3E	TB9 6	N/A	N/A
TB3 1	FIELD DET*	I4D	TB5 7	FIELD DET*	I11J	TB7 7	FIELD DET*	J3J	TB9 7	N/A	N/A
TB3 2	#7	I4E	TB5 8	#22	I11K	TB7 8	#34	J3K	TB9 8	N/A	N/A
TB3 3	FIELD DET*	I4J	TB5 9	FIELD DET*	I12D	TB7 9	FIELD DET*	J4D	TB9 9	N/A	N/A
TB3 4	#8	I4K	TB5 10	#23	I12E	TB7 10	#35	J4E	TB9 10	N/A	N/A
TB3 5	FIELD DET*	I5D	TB5 11	FIELD DET*	I12J	TB7 11	FIELD DET*	J4J	TB9 11	N/A	N/A
TB3 6	#9	I5E	TB5 12	#24	I12K	TB7 12	#36	J4K	TB9 12	N/A	N/A
TB3 7	FIELD DET*	I5J									
TB3 8	#10	I5K									
TB3 9	FIELD DET*	I6D									
TB3 10	#11	I6E									
TB3 11	FIELD DET*	I6J									
TB3 12	#12	I6K									

LEGEND

- TH THERMOSTAT
- CIRCUIT BREAKER
- R RECEPTACLE
- RELAY COIL
- S SIGN RELAY COIL
- T TRANSFER RELAY COM.
- RELAY, CONTACT N.C.
- RELAY, CONTACT N.O.
- SURGE PROTECTION
- SWITCH
- SWITCH, N.C.
- DC GROUND
- EQUIPMENT GROUND
- TR TRANSFER RELAY
- SR SIGN RELAY

SHEET 1 OF 3

CABINET ONE LINE DIAGRAM - POWER

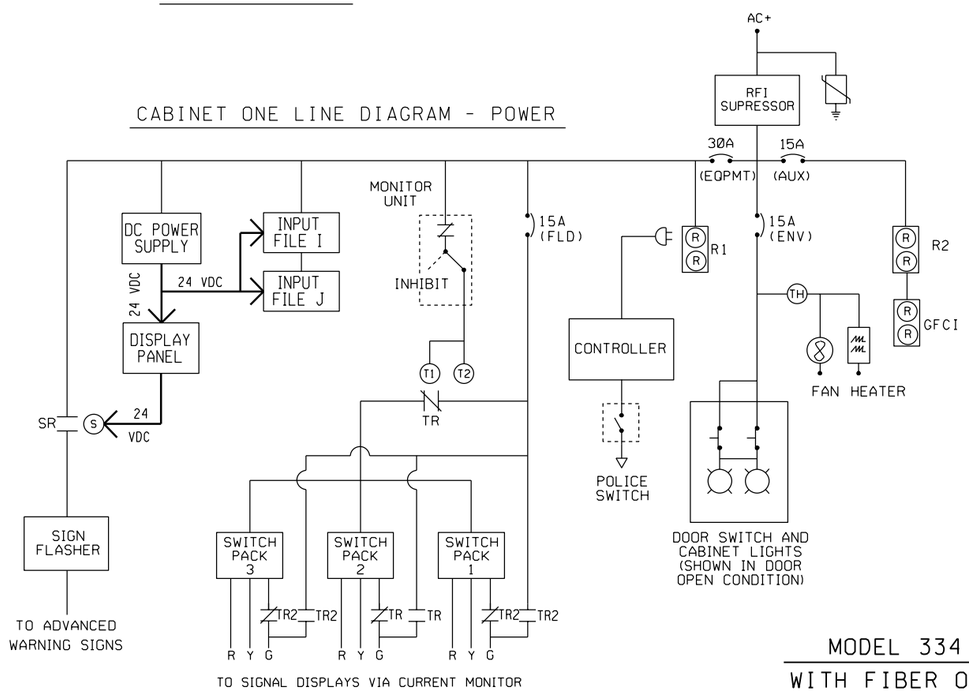

INPUT FILE (REAR VIEW)

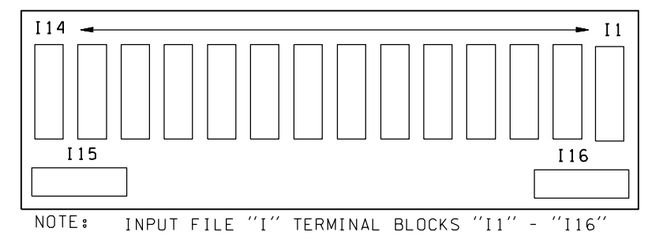

NOTE: INPUT FILE "I" TERMINAL BLOCKS "I1" - "I16"
INPUT FILE "J" TERMINAL BLOCKS "J1" - "J16"

MODEL 334 CABINET DETAILS
WITH FIBER OPTIC COMMUNICATION

MASTER DETAIL REVISED 08/09/12

FILE NAME	T:\414124\ITS\master detail_ Expanded Levels\Datastation-1.dgn						
TIME	11:07:14 AM						
DATE	9/10/2012						
PLOTTED BY	mostagh						
DESIGNED BY							
ENTERED BY							
CHECKED BY							
PROJ. ENGR.							
REGIONAL ADM.		REVISION	DATE	BY			

REGION NO. 10 | STATE WASH | FED.AID PROJ.NO.
JOB NUMBER
CONTRACT NO. | LOCATION NO.

P.E. STAMP BOX DATE

P.E. STAMP BOX DATE

Washington State Department of Transportation

Plot 4

SHEET OF SHEETS

MASTER DETAIL REVISED 02/07/12

CONNECTOR C1P AND C1S

PIN	CONNECT TO	FUNCTION	PIN	CONNECT TO	FUNCTION	PIN	CONNECT TO	FUNCTION	PIN	CONNECT TO	FUNCTION
1	DC GRD	DC GROUND	27	NC	NA	53	DP 55	DET 15	79	DP 77/C4-6	DET37/CM1G
2	C6-1	SWPK1-RED	28	NC	NA	54	DP 56	DET 16	80	DP 78/C4-7	DET38/CM3R
3	C6-2	SWPK1-GRN	29	NC	NA	55	DP 57	DET 17	81	DP 79/C4-8	DET39/CM3Y
4	C6-3	SWPK2-RED	30	NC	NA	56	DP 58	DET 18	82	DP 80/C4-9	DET40/CM3G
5	C6-4	SWPK2-YEL	31	NC	NA	57	DP 59	DET 19	83	C5-1	DP REMOTE
6	C6-5	SWPK2-GRN	32	NC	NA	58	DP 60	DET 20	84	C5-2	NA
7	C6-6	SWPK3-RED	33	NC	NA	59	DP 61	DET 21	85	C5-3	DP TRAFFIC
8	C6-7	SWPK3-YEL	34	NC	NA	60	DP 62	DET 22	86	C5-4	DP CLOCK
9	C6-8	SWPK3-GRN	35	NC	NA	61	DP 63	DET 23	87	C5-5	DP TELEMETRY
10	NC	NA	36	NC	NA	62	DP 64	DET 24	88	C5-6	DP ECHO
11	NC	NA	37	C6-9	SWPK1-YEL	63	C4-1	CM2-RED	89	C5-7	DP CONFLICT
12	NC	NA	38	NC	NA	64	C4-2	CM2-YEL	90	C5-8	DP DET FAILED
13	NC	NA	39	DP 41	DET 1	65	C4-3	CM2-GRN	91	C5-9	DP RED L1
14	I15-4	INPUT GND	40	DP 42	DET 2	66	PC-3	POLICE CONTROL	92	DC GND	OUTPUT GND
15	NC	NA	41	DP 43	DET 3	67	DP 65	DET 25	93	C5-10	SIGN-AUTO/DP METER
16	NC	NA	42	DP 44	DET 4	68	DP 66	DET 26	94	C5-11	DP RED L2
17	NC	NA	43	DP 45	DET 5	69	DP 67	DET 27	95	C5-12	DP YEL L2
18	NC	NA	44	DP 46	DET 6	70	DP 68	DET 28	96	C5-13	DP GRN L2
19	NC	NA	45	DP 47	DET 7	71	DP 69	DET 29	97	C5-14	DP YEL L1
20	NC	NA	46	DP 48	DET 8	72	DP 70	DET 30	98	C5-15	DP GRN L1
21	NC	NA	47	DP 49	DET 9	73	DP 71	DET 31	99	C5-16	DP RED L3
22	NC	NA	48	DP 50	DET 10	74	DP 72	DET 32	100	C5-17	DEP YEL L3
23	NC	NA	49	DP 51	DET 11	75	DP 73	DET 33	101	C5-18	DP GRN L3
24	NC	NA	50	DP 52	DET 12	76	DP 74	DET 34	102	I15-3	DET RESET
25	NC	NA	51	DP 53	DET 13	77	DP 75/C4-4	DET35/CM1R	103	C6-10	WATCHDOG
26	NC	NA	52	DP 54	DET 14	78	DP 76/C4-5	DET36/CM1Y	104	DC GND	INPUT GND

P1 CONNECTOR - FEMALE INPUT FILE TO DISPLAY PANEL

P1 PIN#	CONNECTION	FUNCTION
1	DP1	DET. 1
2	DP2	DET. 2
3	DP3	DET. 3
4	DP4	DET. 4
5	DP5	DET. 5
6	DP6	DET. 6
7	DP7	DET. 7
8	DP8	DET. 8
9	DP9	DET. 9
10	DP10	DET.10
11	DP11	DET.11
12	DP12	DET.12
13	DP13	DET.13
14	DP14	DET.14
15	DP15	DET.15
16	DP16	DET.16
17	DP17	DET.17
18	DP18	DET.18
19	DP19	DET.19
20	DP20	DET.20
21	DP21	DET.21
22	DP22	DET.22
23	DP23	DET.23
24	DP24	DET.24
25	DP25	DET.25
26	DP26	DET.26
27	DP27	DET.27
28	DP28	DET.28
29	DP29	DET.29
30	DP30	DET.30
31	DP31	DET.31
32	DP32	DET.32
33	DP33	DET.33
34	DP34	DET.34
35	DP35	DET.35
36	DP36	DET.36
37	DP37	DET.37
38	DP38	DET.38
39	DP39	DET.39
40	DP40	DET.40
41	NC	NA
42	NC	NA
43	NC	NA
44	NC	NA
45	NC	NA
46	NC	NA
47	NC	NA
48	NC	NA
49	+24 VDC	POWER
50	LOGIC GND	GROUND

P2 CONNECTOR - MALE DISPLAY PANEL TO C1

P2 PIN#	CONNECTION	FUNCTION
1	DP41	DET. 1
2	DP42	DET. 2
3	DP43	DET. 3
4	DP44	DET. 4
5	DP45	DET. 5
6	DP46	DET. 6
7	DP47	DET. 7
8	DP48	DET. 8
9	DP49	DET. 9
10	DP50	DET.10
11	DP51	DET.11
12	DP52	DET.12
13	DP53	DET.13
14	DP54	DET.14
15	DP55	DET.15
16	DP56	DET.16
17	DP57	DET.17
18	DP58	DET.18
19	DP59	DET.19
20	DP60	DET.20
21	DP61	DET.21
22	DP62	DET.22
23	DP63	DET.23
24	DP64	DET.24
25	DP65	DET.25
26	DP66	DET.26
27	DP67	DET.27
28	DP68	DET.28
29	DP69	DET.29
30	DP70	DET.30
31	DP71	DET.31
32	DP72	DET.32
33	DP73	DET.33
34	DP74	DET.34
35	DP75	DET.35
36	DP76	DET.36
37	DP77	DET.37
38	DP78	DET.38
39	DP79	DET.39
40	DP80	DET.40
41	NC	NA
42	NC	NA
43	NC	NA
44	NC	NA
45	NC	NA
46	NC	NA
47	NC	NA
48	NC	NA
49	NC	NA
50	NC	NA

SIGN SWITCH

CONNECT TO	FUNCTION
C5-23	DC GND
SR-7	SR COIL
C5-10	AUTO METER

SHOWN IN AUTOMATIC MODE

NOTE: SIGN SWITCH SHALL BE 3-POSITION STATIONARY TYPE WITH 10 A CONTACT RATING.

KEY TO ABBREVIATIONS

CB = CIRCUIT BREAKER
CM = CURRENT MONITOR
DP = DISPLAY PANEL
MU = MONITOR UNIT
NA = NOT ASSIGNED
NC = NOT CONNECTED
PC = POLICE CONTROL SWITCH
SR = SIGN RELAY
SS = SIGN SWITCH
SWPK = SWITCH PACK
TR = TRANSFER RELAY

C2 CONNECTOR TO TERMINAL SERVER

C2 PIN	RMC30	RS910
K	Rx	3
L	Tx	2
N	Com	5
D		
H		
M		

MODEL 204 FLASHER

CONNECT TO	FUNCTION		CONNECT TO	FUNCTION
T1-6	LOAD CIRCUIT # 2	8 7	T1-5	LOAD CIRCUIT # 1
AC -	AC NEUTRAL	10 9	GND	EARTH GROUND
NC	NO CONNECTION	12 11	T1-1	AC LINE

SIGN RELAY

CONNECT TO	FUNCTION	CONNECT TO	FUNCTION
SS-2	SIGN CONTROL	NC	NA
NC	NA	NC	NA
T2-7	AC+	T1-3	SIGN OFF FIELD
C5-24	+24 VDC	T1-1	SIGN ON FIELD

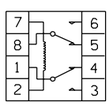

SHOWN DE-ENERGIZED (NOT METERING)

NOTE: RELAY SHALL OPERATE ON GROUND OUTPUT FROM 170 CONTROLLER. RELAY COIL SHALL DRAW LESS THAN 75 MILLIAMPERES.

RELAY SHALL BE DPDT AS SHOWN AND HAVE CONTACT RATING NOT LESS THAN 10 AMPS CONTINUOUS DUTY.

AC WIRING FROM SIGN RELAY TO PDA SHALL BE 14 AWG.

POLICE CONTROL SWITCH

CONNECT TO	FUNCTION
NC	NA
DC GND	DC GND
C1-66	POLICE CTRL

SHOWN IN ON MODE

NOTE: POLICE CONTROL SWITCH SHALL BE 2-POSITION STATIONARY TYPE WITH 10 A CONTACT RATING.

C4 CONNECTOR (TO CURRENT MONITOR)

PIN	CONNECTION	FUNCTION
1	C1-63	CM2-RED
2	C1-64	CM2-YEL
3	C1-65	CM2-GRN
4	C1-77	CM1-RED
5	C1-78	CM1-YEL
6	C1-79	CM1-GRN
7	C1-80	CM3-RED
8	C1-81	CM3-YEL
9	C1-82	CM3-GRN
10	C1-36	NA
11	NC	NA
12	NC	NA
13	NC	NA
14	NC	NA
15	NC	NA
16	NC	NA
17	C1-70	NA
18	C1-71	NA
19	C1-72	NA
20	NC	NA
21	C5-19	NA
22	C5-20	NA
23	DC GND	DC GROUND
24	TB1-1B	+24 VDC

C5 CONNECTOR (TO DISPLAY PANEL)

PIN	CONNECTION	FUNCTION
1	C1-83	DP -REMOTE
2	C1-84	DP -NA
3	C1-85	DP -STANDBY TRAFFIC
4	C1-86	DP -STANDBY CLOCK
5	C1-87	DP -TELEMETRY
6	C1-88	DP -ECHO
7	C1-89	DP -CONFLICT
8	C1-90	DP -DET. FAILED
9	C1-91	DP -RED LANE 1
10	C1-93	DP -METERING, SS-3
11	C1-94	DP -RED LANE 2
12	C1-95	DP -YELLOW LANE 2
13	C1-96	DP -GREEN LANE 2
14	C1-97	DP -YELLOW LANE 1
15	C1-98	DP -GREEN LANE 1
16	C1-99	DP -RED LANE 3
17	C1-100	DP -YELLOW LANE 3
18	C1-101	DP -GREEN LANE 3
19	NC	NA
20	NC	NA
21	NC	NA
22	NC	NA
23	DC GND	SS-1
24	TB1-2B	+24 VDC

C6 CONNECTOR (TO PDA)

PIN	CONNECTION	FUNCTION
1	C1-2	SWPK1-RED
2	C1-3	SWPK1-GRN
3	C1-4	SWPK2-RED
4	C1-5	SWPK2-YEL
5	C1-6	SWPK2-GRN
6	C1-7	SWPK3-RED
7	C1-8	SWPK3-YEL
8	C1-9	SWPK3-GRN
9	C1-37	SWPK1-YEL
10	C1-103	WATCHDOG MU
11	NC	NA
12	NC	NA
13	NC	NA
14	NC	NA
15	NC	NA
16	NC	NA
17	NC	NA
18	NC	NA
19	NC	NA
20	NC	NA
21	NC	NA
22	NC	NA
23	DC GND	DC GROUND
24	TB1-3B	+24 VDC

SHEET 2 OF 3

MODEL 334 CABINET DETAILS
WITH FIBER OPTIC COMMUNICATION

FILE NAME	T:\414124\ITS\master detail_ Expanded Levels\Datastation-1.dgn
TIME	11:07:15 AM
DATE	9/10/2012
PLOTTED BY	mostagh
DESIGNED BY	
ENTERED BY	
CHECKED BY	
PROJ. ENGR.	
REGIONAL ADM.	

REVISION | DATE | BY

REGION NO. 10 | STATE WASH | FED.AID PROJ.NO.

JOB NUMBER

CONTRACT NO. | LOCATION NO.

P.E. STAMP BOX DATE

P.E. STAMP BOX DATE

Washington State Department of Transportation

Plot 5

SHEET OF SHEETS