Washington State Department of Transportation

SR 520 Bridge Replacement and HOV Program

STATE ROUTE 520

LETTER OF TRANSMITTAL

To:	Margaret Kucharski / Julia Mizuhata	**Contract & Task Order:**	Y-9761 IH
From:	Larry Kyle	**File Code:**	Y-9761 IH 4.1f
Date:	March 8, 2016	**LOT #:**	1921
Copies To:	WSDOT Document Control Project Files		

These are:

- ☐ Per Your Request
- ☐ For Your Information
- ☒ For Your Acceptance
- ☐ For Your Files
- ☐ For Your Review and Comment

Sent Via:

- ☐ U.S. Mail
- ☐ Ground Service
- ☐ Express Overnight
- ☒ E-mail
- ☐ Courier
- ☐ Hand Deliver / Pick up via inter-office WSDOT courier

We are transmitting the following materials:

Y-9761 IH 4.1f Up to Twenty (20) Individual Permit Modifications or Updates – Corps Permit Modification

Comments:

Please find the above document(s) enclosed. We are submitting the *Up to Twenty (20) Individual Permit Modifications or Updates – Corps Permit Modification* in accordance with Contract Y-9761, Task Order IH Deliverable 4.1f.

If you have questions please contact Scott White at (425) 345-7685.

Program Engineering Manager

3-9-2016
Date

Wells Fargo Building
999 Third Ave., Suite 2200
Seattle, WA 98104
Phone: 206-770-3500
Fax: 206-770-3569

Washington State
Department of Transportation

SR 520 Bridge Replacement and HOV Program
999 3rd Avenue, Ste. 2200, MS: NB82-99
Seattle, WA 98104
206-770-3500 / Fax: 206-770-3569
TTY: 1-800-833-6388
www.wsdot.wa.gov

March 8, 2016 LTR - 2664

Rebecca McAndrew
Seattle District, Corps of Engineers
CENWS-OD-RG
P.O. Box 3755
Seattle, WA 98124-3755

Re: SR 520 I-5 to Medina: Bridge Replacement and HOV Project – Request for DA Permit Modification

Dear Ms. McAndrew:

The Washington State Department of Transportation (WSDOT) is submitting revised permit plans and supporting documentation for the SR 520 I-5 to Medina Bridge Replacement and HOV Project (Project). In submitting this information, WSDOT is requesting a revision for the Department of the Army Permit Reference No. NWS-2008-1246 from the Seattle District, Corps of Engineers as necessary to authorize activities associated with the demolition of the existing floating bridge and approach spans.

The new floating bridge is scheduled to open this spring 2016 and demolition of the existing floating span, the east approach span, and the eastern terminus of the west approach span will commence soon thereafter. The enclosed Endangered Species Act (ESA) Re-initiation memorandum (November 2015) provides detailed information regarding the proposed demolition activities. WSDOT and the Federal Highway Administration has completed the re-initiation of formal consultation on the demolition activities as of February 19, 2016.

Though the demolition plan is generally within the scope of that described in the original JARPA submittal, WSDOT and its contractor have identified additional temporary impact to the lakebed that requires Corps authorization. The temporary impact would be generated by temporary sidecasting of native lakebed material from around the base of the existing bridge columns to allow column shearing 2 feet below the mudline per HPA permit conditions. Once the columns are removed, the sidecast lakebed material would be returned to its original location. This activity is described in detail in Section 1.2.1.2 of the ESA memo (and Attachment 1) and shown on Sheet 5 of 25 of the revised permit plans.

If you have any questions regarding the application or project please contact me at 425-345-7685 or whites@consultant.wsdot.wa.gov.

Sincerely,

Scott White
Regulatory Compliance Manager
SR 520 Bridge Replacement and HOV Program

Enclosures: Revised JARPA Drawings (dated February 17, 2016)
SR 520, I-5 to Medina: Bridge Replacement and HOV Project; Floating Bridge and Landings and West Approach Bridge Project Updates; ESA Reinitiation Memorandum (dated November 2015)

cc: WSDOT Document Control

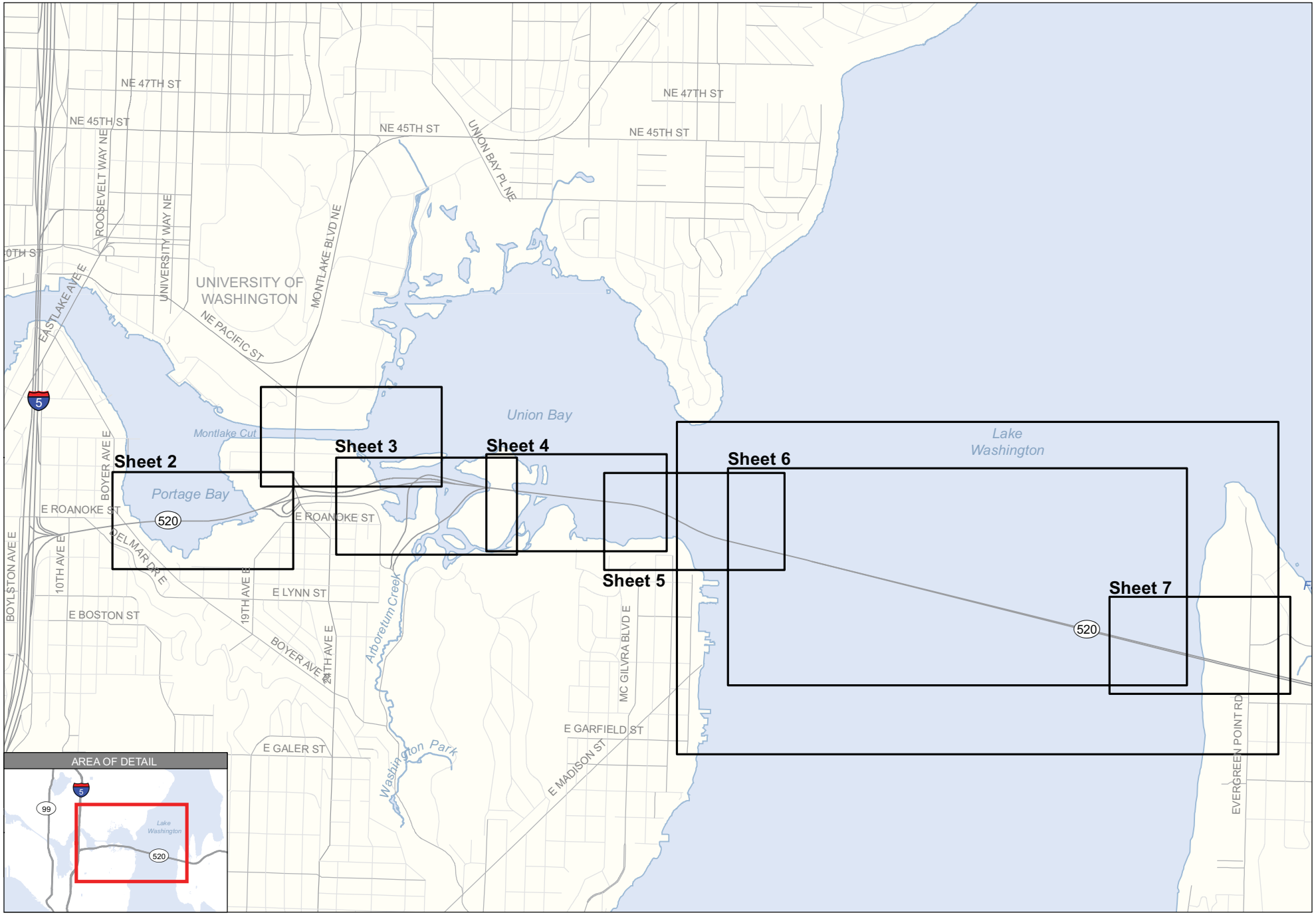

SR520 - I-5 TO MEDINA
I-5 to Medina: Bridge Replacement and HOV Project

Washington State Department of Transportation

PERMIT DRAWINGS

PURPOSE: To improve mobility for people and goods across Lake Washington within the SR 520 corridor in a manner that is safe, reliable, and cost-effective, while mitigating impacts on affected neighborhoods and the environment.
REFERENCE: NWS-2008-1246
APPLICANT: WSDOT

IN: Wetlands, Streams, and Lake WA
AT: Cities of Seattle and Medina
COUNTY: King **STATE:** WA
SECTION: 22 **TOWNSHIP:** 25N
RANGE: 04E
LATITUDE: 47.64
LONGITUDE: -122.28
DATE: February 17, 2016

N W E S

0 1,000 2,000
Feet
HORIZONTAL DATUM: nad 83/91
VERTICAL DATUM: COE - 1919

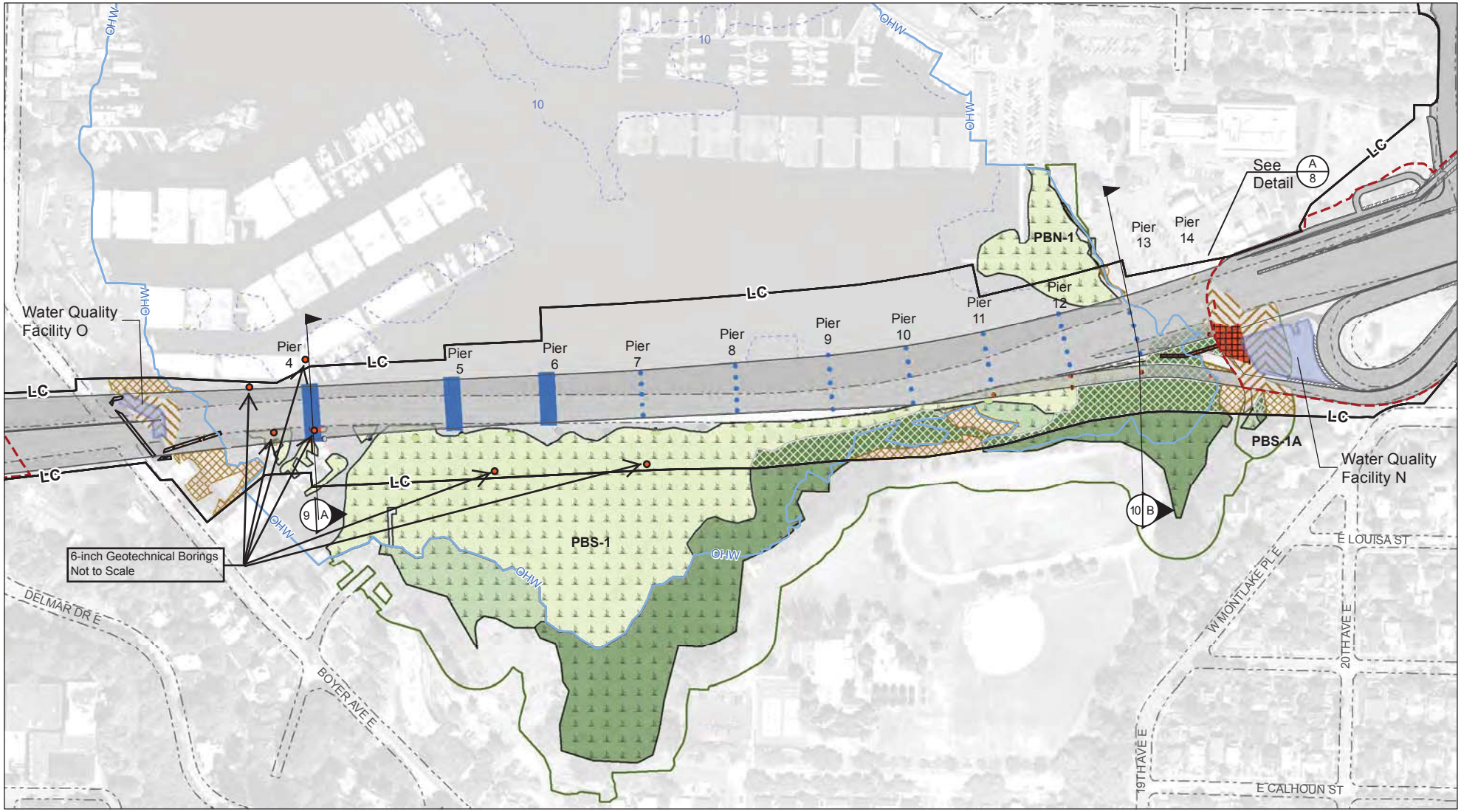

Proposed Edge of Pavement
Water Quality Facility
Drainage Pipe, Outfall, Ditch
Proposed Cut/Fill Line
Retaining Wall
LC Limits of Construction

Anchor and Cable
OHW Ordinary High Water Mark (21.85')
5-ft Bathymetry
Existing Edge of Pavement

Wetland Class
Aquatic Bed
Emergent
Forest/Shrub
Wetland Buffer

Impact Type
Permanent Wetland Impact
Permanent Lakebed Impact
Permanent Buffer Impact
Temporary Wetland Clearing
Temporary Buffer Clearing
Temporary Lakebed Impact
Temporary Wetland Fill

Impact Table (acre)

PBS-1 Total	PBS-1A Total	BRIDGE PIERS
0.13		
		0.34
0.31	0.04	
1.25	0.02	
0.65	0.08	
		0.01
0.03		

SR520 - I-5 TO MEDINA
I-5 to Medina: Bridge Replacement and HOV Project
Washington State Department of Transportation

PERMIT DRAWINGS
PURPOSE: To improve mobility for people and goods across Lake Washington within the SR 520 corridor in a manner that is safe, reliable, and cost-effective, while mitigating impacts on affected neighborhoods and the environment.
REFERENCE: NWS-2008-1246
APPLICANT: WSDOT

IN: Wetlands, Streams, and Lake WA
AT: Cities of Seattle and Medina
COUNTY: King **STATE:** WA
DATE: February 17, 2016

N W E S

0 100 200 300 400 500
Feet

HORIZONTAL DATUM: nad 83/91
VERTICAL DATUM: COE - 1919

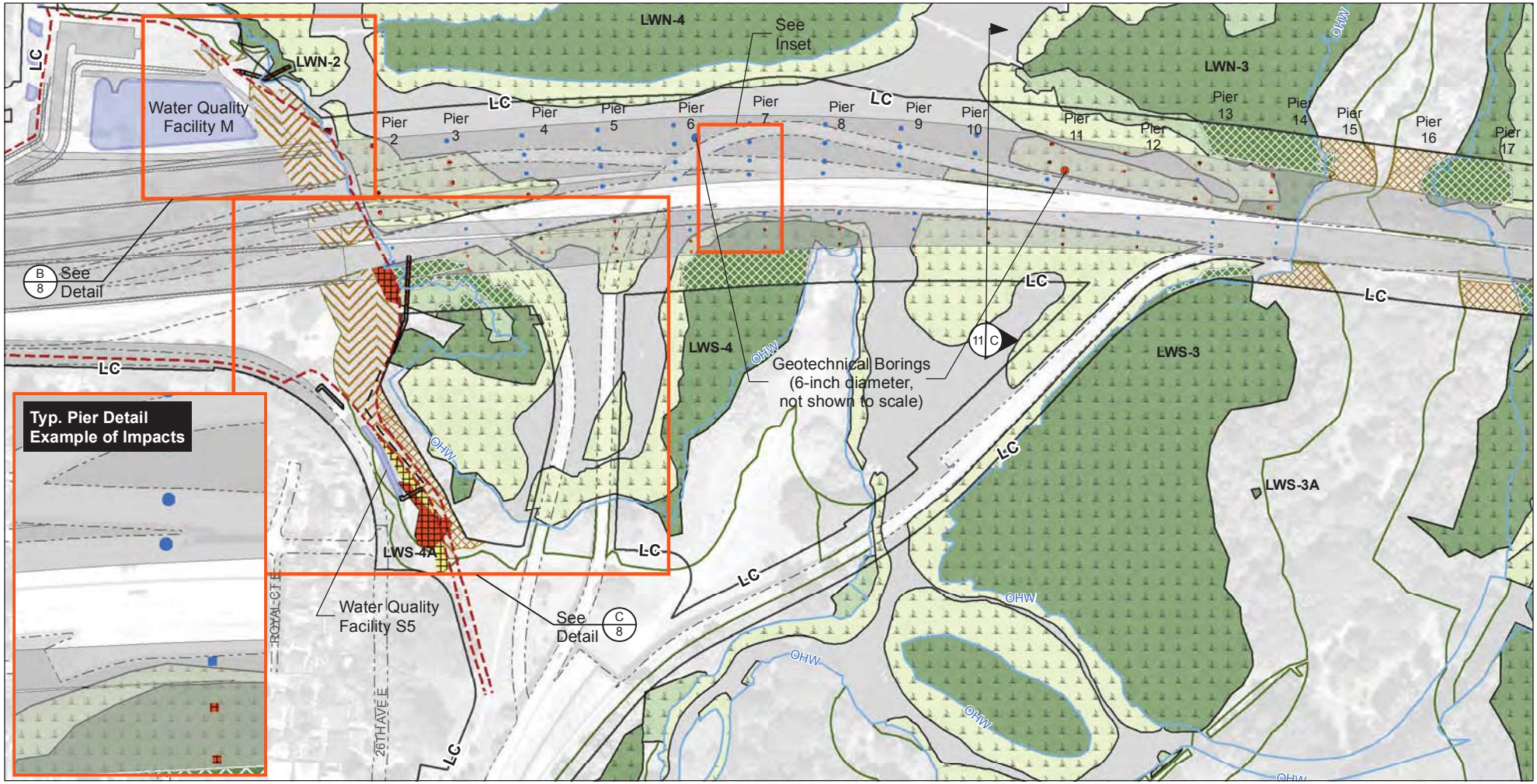

Proposed Edge of Pavement
Water QualityStormwater Facility
Drainage Pipe, Outfall, Ditch
Proposed Cut/Fill Line
Retaining Wall
Limits of Construction

Ordinary High Water Mark (18.57')
5-ft Bathymetry
Existing Edge of Pavement

Wetland Class

Aquatic Bed
Emergent
Forest/Shrub
Wetland Buffer

Impact Type

Permanent Wetland Impact
Permanent Lakebed Impact
Permanent Buffer Impact
Temporary Wetland Clearing
Temporary Buffer Clearing
Temporary Lakebed Impact
Temporary Wetland Fill
Temporary Buffer Fill

Impact Table (acre)

LWN-2 Total	LWN-3 Total	LWS-3 Total	LWS-4 Total	LWS-4A Total	PIER 2-14
0.01	0.01	0.03	0.09	0.11	
					0.11
0.29	0.00	0.00	1.21	0.01	
0.00	0.38	0.55	0.60	0.00	
0.09	0.156	0.18	0.40	0.10	

SR520 - I-5 TO MEDINA
I-5 to Medina: Bridge Replacement and HOV Project
Washington State Department of Transportation

PERMIT DRAWINGS
PURPOSE: To improve mobility for people and goods across Lake Washington within the SR 520 corridor in a manner that is safe, reliable, and cost-effective, while mitigating impacts on affected neighborhoods and the environment.
REFERENCE: NWS-2008-1246
APPLICANT: WSDOT

IN: Wetlands, Streams, and Lake WA
AT: Cities of Seattle and Medina
COUNTY: King **STATE:** WA
DATE: February 17, 2016

N W E S

0 100 200 300 400 500
Feet

HORIZONTAL DATUM: nad 83/91
VERTICAL DATUM: COE - 1919

Sheet 3 of 25

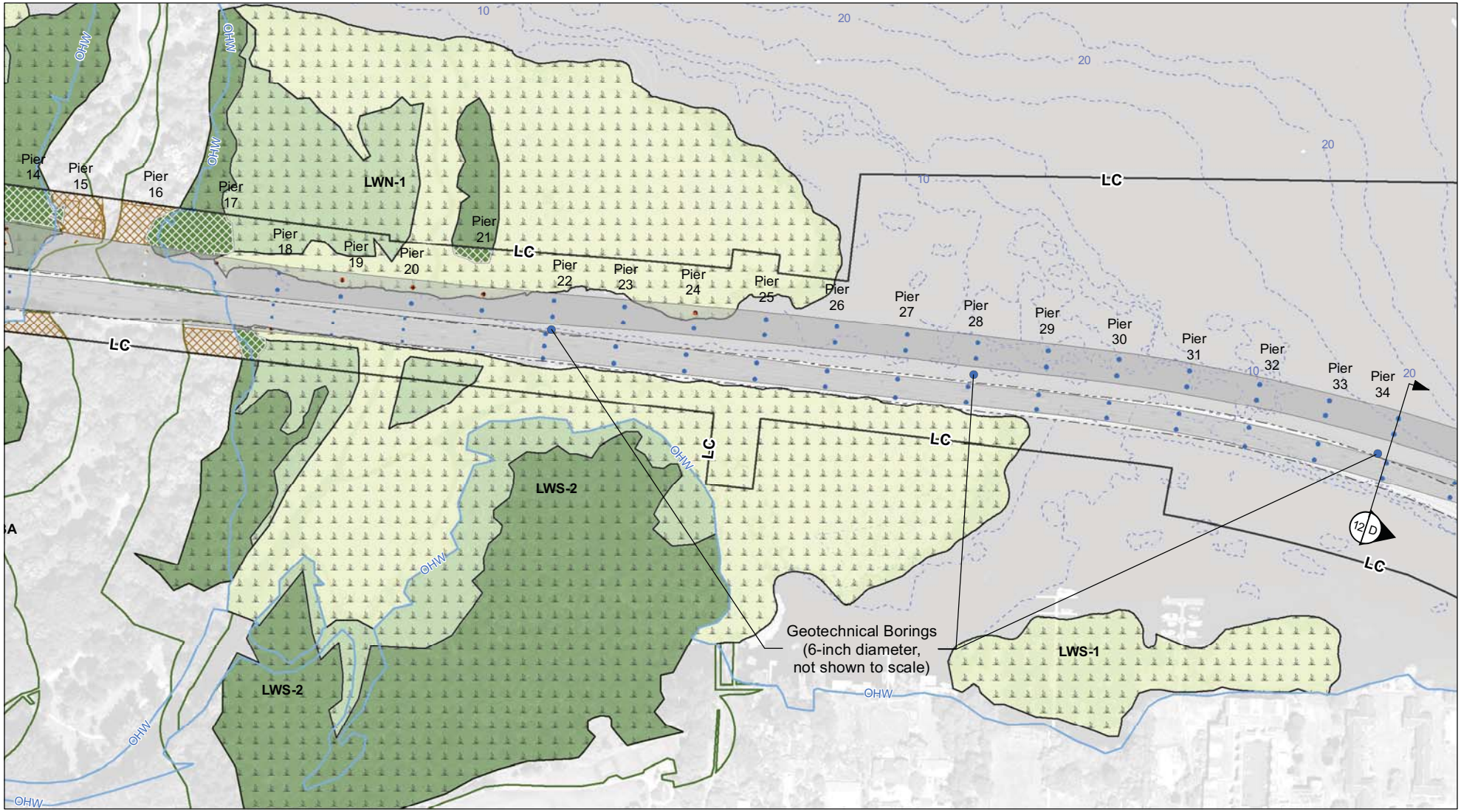

Proposed Edge of Pavement	Ordinary High Water Mark (18.57')	Wetland Class	Impact Type
Water Quality Stormwater Facility	5-ft Bathymetry	Aquatic Bed	Permanent Wetland Impact
Drainage Pipe, Outfall, Ditch	Existing Edge of Pavement	Emergent	Permanent Lakebed Impact
Proposed Cut/Fill Line		Forest/Shrub	Permanent Buffer Impact
Retaining Wall		Wetland Buffer	Temporary Wetland Clearing
Limits of Construction			Temporary Buffer Clearing
			Temporary Lakebed Impact

Impact Table (acre)

LWN-1 Total	LWS-2 Total	PIER 17 - 42
0.01	0.001	
		0.13
0.004	0.001	
0.32	0.06	
0.21	0.14	

SR520 - I-5 TO MEDINA
I-5 to Medina: Bridge Replacement and HOV Project
Washington State Department of Transportation

PERMIT DRAWINGS
PURPOSE: To improve mobility for people and goods across Lake Washington within the SR 520 corridor in a manner that is safe, reliable, and cost-effective, while mitigating impacts on affected neighborhoods and the environment.
REFERENCE: NWS-2008-1246
APPLICANT: WSDOT

IN: Wetlands, Streams, and Lake WA
AT: Cities of Seattle and Medina
COUNTY: King **STATE:** WA
DATE: February 17, 2016

N W E S

0 100 200 300 400 500
Feet

HORIZONTAL DATUM: nad 83/91
VERTICAL DATUM: COE - 1919

Sheet 4 of 25

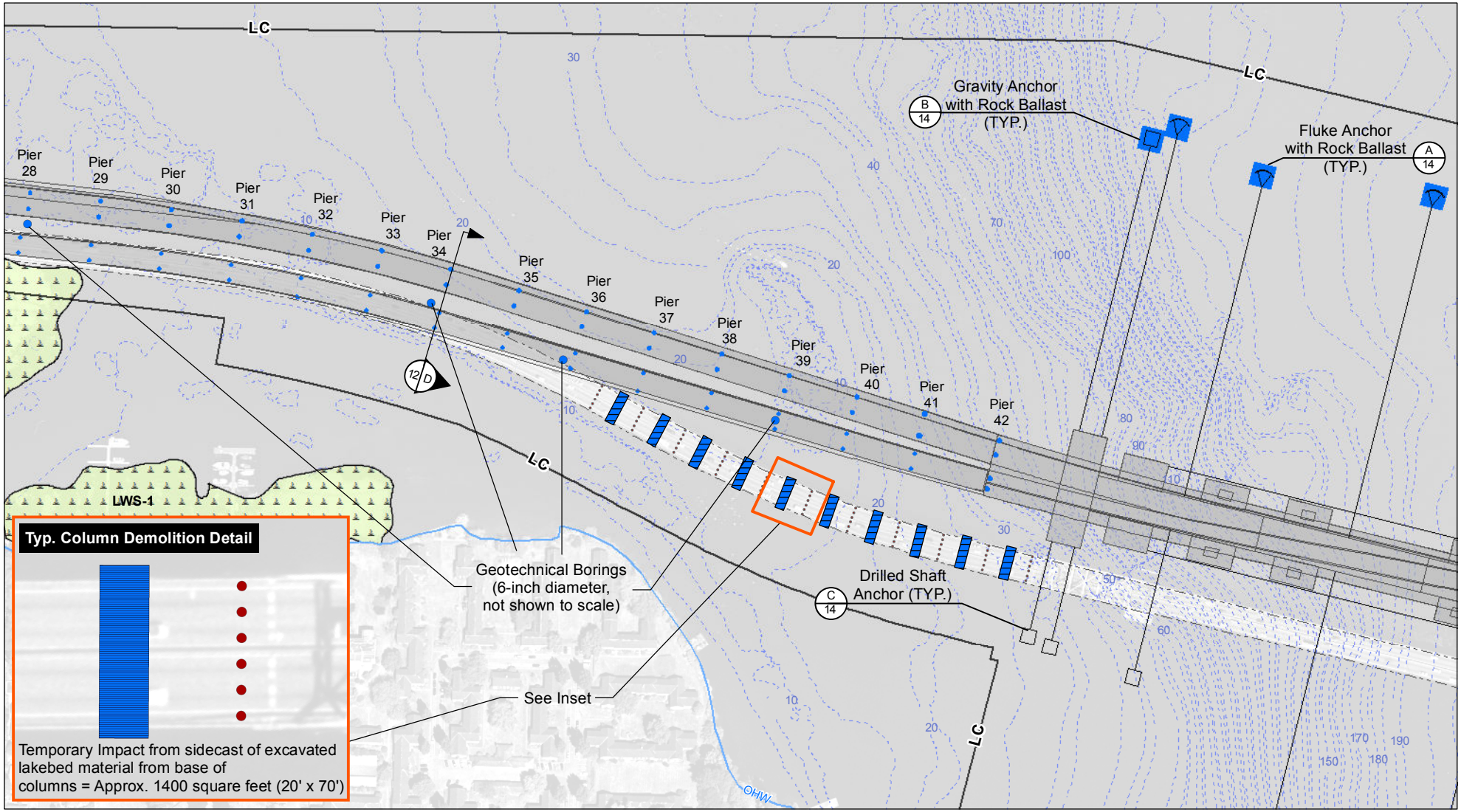

Proposed Edge of Pavement
Water Quality Stormwater Facility
Drainage Pipe, Outfall, Ditch
Proposed Cut/Fill Line
Retaining Wall
Limits of Construction

Anchor and Cable
Ordinary High Water Mark (18.57')
5-ft Bathymetry
Existing Edge of Pavement

Wetland Class
Aquatic Bed
Emergent
Forest/Shrub
Wetland Buffer

Impact Type
Permanent Wetland Impact
Permanent Lakebed Impact
Permanent Buffer Impact
Temporary Wetland Clearing
Temporary Buffer Clearing
Temporary Lakebed Impact

Impact Table (acre)

PIERS 17 - 42	ANCHORS	COLUMN DEMO
0.13	6.1	
		0.35

SR520 - I-5 TO MEDINA
I-5 to Medina: Bridge Replacement and HOV Project
Washington State Department of Transportation

PERMIT DRAWINGS
PURPOSE: To improve mobility for people and goods across Lake Washington within the SR 520 corridor in a manner that is safe, reliable, and cost-effective, while mitigating impacts on affected neighborhoods and the environment.
REFERENCE: NWS-2008-1246
APPLICANT: WSDOT

IN: Wetlands, Streams, and Lake WA
AT: Cities of Seattle and Medina
COUNTY: King **STATE:** WA
DATE: February 17, 2016

N W E S

0 100 200 300 400 500
Feet

HORIZONTAL DATUM: nad 83/91
VERTICAL DATUM: COE - 1919

Sheet 5 of 25

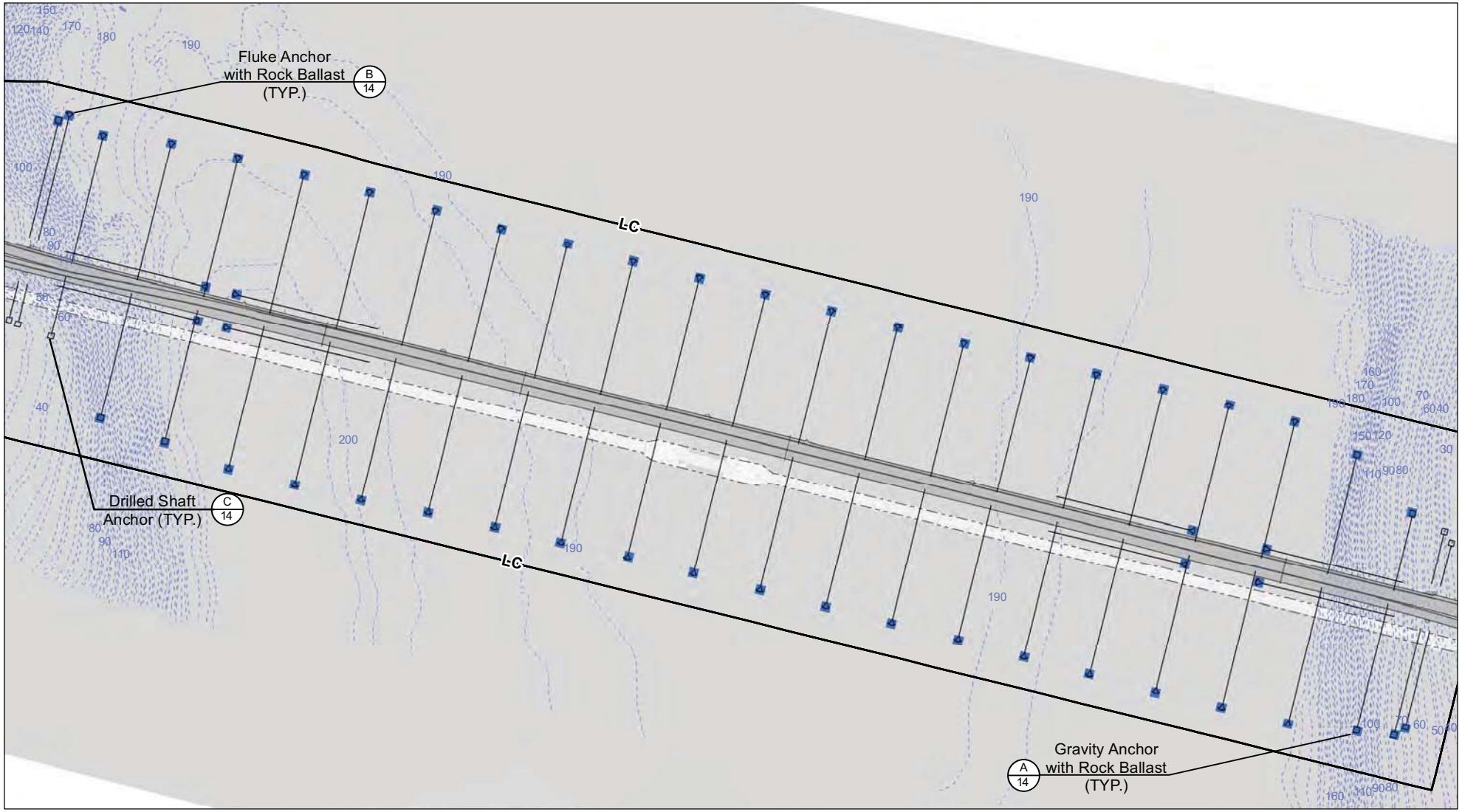

Proposed Edge of Pavement
Water Quality Stormwater Facility
Drainage Pipe, Outfall, Ditch
LC Limits of Construction
Anchor and Cable

OHW Ordinary High Water Mark (21.85')
10-ft Bathymetry
Existing Edge of Pavement

Wetland Class
Aquatic Bed
Emergent
Forest/Shrub
Wetland Buffer

Impact Type
Permanent Wetland Impact
Permanent Lakebed Impact
Permanent Buffer Impact
Temporary Wetland Clearing
Temporary Buffer Clearing
Temporary Fill

Impact Table (acre) ANCHORS
6.1

0 500 1,000
Feet

SR520 - I-5 TO MEDINA
I-5 to Medina: Bridge Replacement and HOV Project

Washington State Department of Transportation

PERMIT DRAWINGS

PURPOSE: To improve mobility for people and goods across Lake Washington within the SR 520 corridor in a manner that is safe, reliable, and cost-effective, while mitigating impacts on affected neighborhoods and the environment.
REFERENCE: NWS-2008-1246
APPLICANT: WSDOT

IN: Wetlands, Streams, and Lake WA
AT: Cities of Seattle and Medina
COUNTY: King **STATE:** WA **DATE:** February 17, 2016

N W E S

HORIZONTAL DATUM: nad 83/91
VERTICAL DATUM: COE - 1919

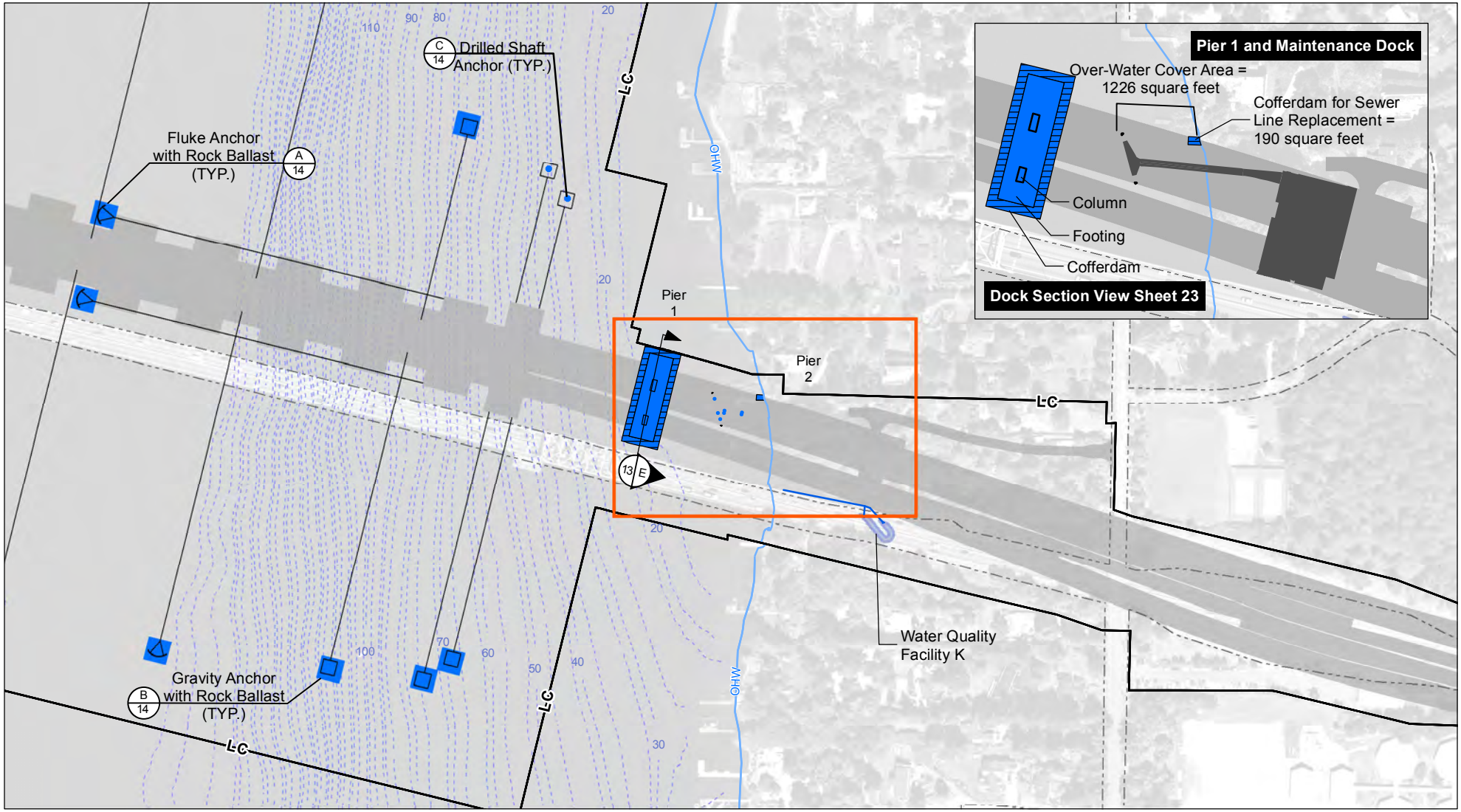

Proposed Edge of Pavement	Anchor and Cable	**Wetland Class**	**Impact Type**
Water Quality Stormwater Facility	OHW Ordinary High Water Mark (21.85')	Aquatic Bed	Permanent Wetland Impact
Proposed Stormwater Sewer Pipe	5-ft Bathymetry	Emergent	Permanent Lakebed Impact
Proposed Cut/Fill Line	Existing Edge of Pavement	Forest/Shrub	Permanent Buffer Impact
Retaining Wall		Wetland Buffer	Temporary Wetland Clearing
L-C Limits of Construction			Temporary Buffer Clearing
			Temporary Lakebed Impact

Impact Table (acre)

ANCHORS	PIER 1	DOCK PILES	SEWER LINE COFFERDAM
6.1	0.22	113 (SF)	
	0.16		190 (SF)

SR520 - I-5 TO MEDINA
I-5 to Medina: Bridge Replacement and HOV Project

Washington State Department of Transportation

PERMIT DRAWINGS

PURPOSE: To improve mobility for people and goods across Lake Washington within the SR 520 corridor in a manner that is safe, reliable, and cost-effective, while mitigating impacts on affected neighborhoods and the environment.
REFERENCE: NWS-2008-1246
APPLICANT: WSDOT

IN: Wetlands, Streams, and Lake WA
AT: Cities of Seattle and Medina
COUNTY: King **STATE:** WA
DATE: February 17, 2016

N W E S

0 100 200 300 400 500
Feet

HORIZONTAL DATUM: nad 83/91
VERTICAL DATUM: COE - 1919

Sheet 7 of 25

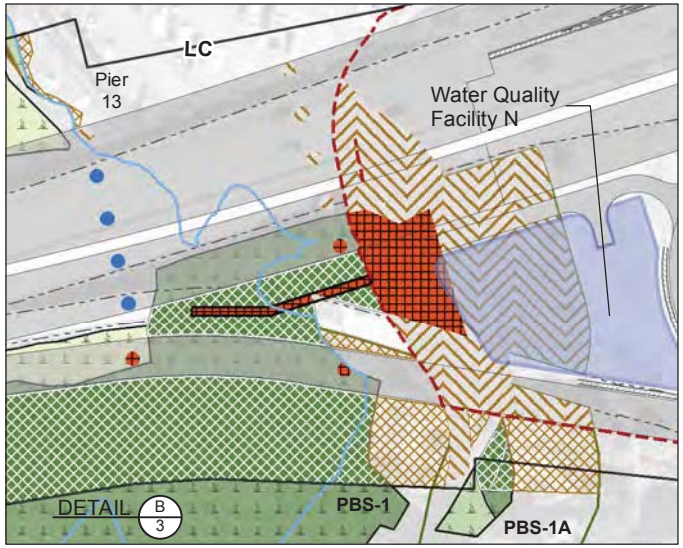

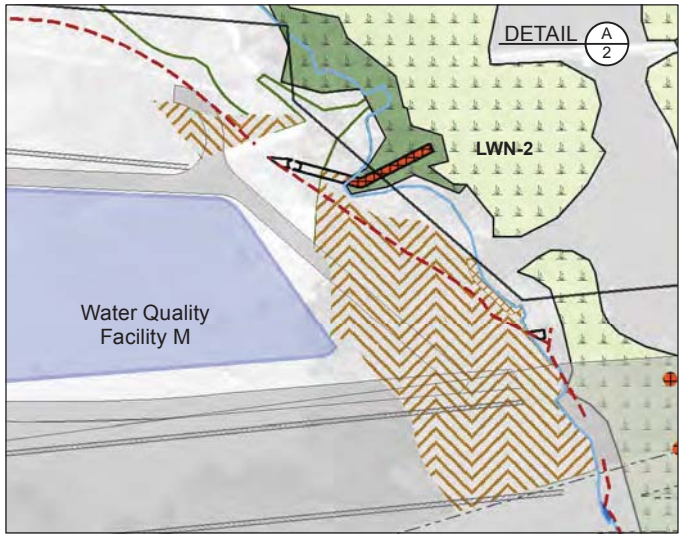

		Wetland Class	Impact Type	
Proposed Edge of Pavement	Anchor and Cable	Aquatic Bed	Permanent Wetland Impact	Temporary Wetland Fill
Water Quality Stormwater Facility	Ordinary High Water Mark (18.57')	Emergent	Permanent Lakebed Impact	Temporary Buffer Fill
Drainage Pipe, Outfall, Ditch	5-ft Bathymetry	Forest/Shrub	Permanent Buffer Impact	
Proposed Cut/Fill Line	Existing Edge of Pavement	Wetland Buffer	Temporary Wetland Clearing	
Retaining Wall			Temporary Buffer Clearing	
Limits of Construction			Temporary Lakebed Impact	

SR520 - I-5 TO MEDINA
I-5 to Medina: Bridge Replacement and HOV Project

Washington State Department of Transportation

PERMIT DRAWINGS

PURPOSE: To improve mobility for people and goods across Lake Washington within the SR 520 corridor in a manner that is safe, reliable, and cost-effective, while mitigating impacts on affected neighborhoods and the environment.
REFERENCE: NWS-2008-1246
APPLICANT: WSDOT

IN: Wetlands, Streams, and Lake WA
AT: Cities of Seattle and Medina
COUNTY: King **STATE:** WA
DATE: February 17, 2016

N W E S

0 100 200
Feet

HORIZONTAL DATUM: nad 83/91
VERTICAL DATUM: COE - 1919

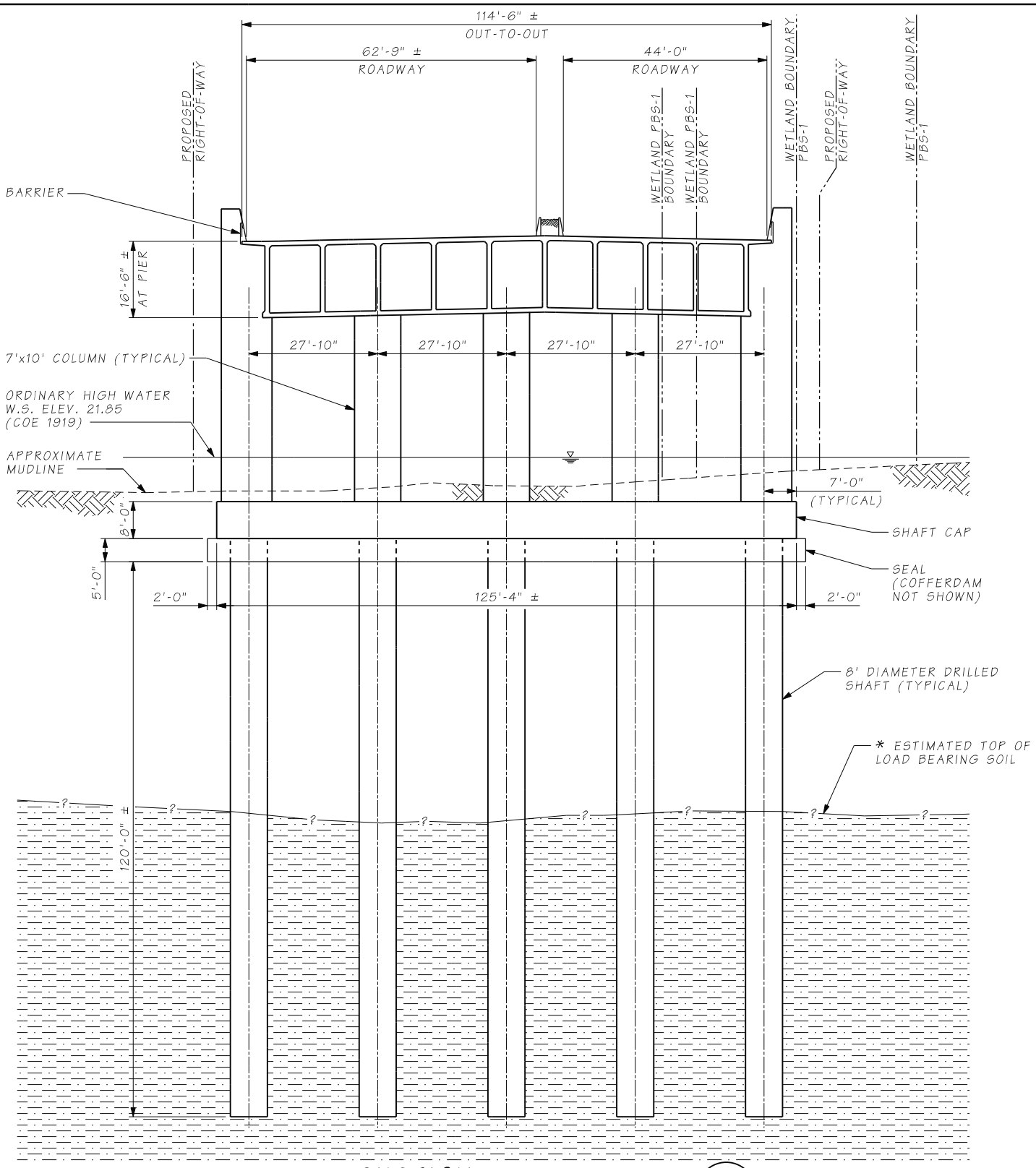

SECTION A/2

SECTION SHOWN NEAR CL PBB STA. 30+70

* THE SUBSURFACE SOIL PROFILE IS BASED ON INFORMATION OBTAINED FROM PRELIMINARY GEOTECHNICAL INVESTIGATIONS. THE LOCATIONS OF THE SUBSURFACE SOIL LAYERS HAVE BEEN ESTIMATED FROM HISTORICAL BORING LOG INFORMATION AND A SINGLE NEW BORING IN PORTAGE BAY. ADDITIONAL GEOTECHNICAL INVESTIGATIONS CURRENTLY UNDERWAY WILL REFINE THESE ESTIMATES.

SR520 – I-5 TO MEDINA **I-5 to Medina: Bridge Replacement and HOV Project** **Washington State Department of Transportation**	**PERMIT DRAWINGS** **PURPOSE:** To improve mobility for people and goods across Lake Washington within the SR 520 corridor in a manner that is safe, reliable, and cost-effective, while mitigating impacts on affected neighborhoods and the environment. **REFERENCE:** NWS-2008-1246 **APPLICANT: WSDOT**	**IN:** Wetlands, Streams, and Lake WA **AT:** Cities of Seattle and Medina **COUNTY:** King **STATE:** WA **DATE:** February 17, 2016	**HORIZONTAL DATUM:** NAD 83/91 **VERTICAL DATUM:** COE - 1919 **SHEET 9 OF 25**

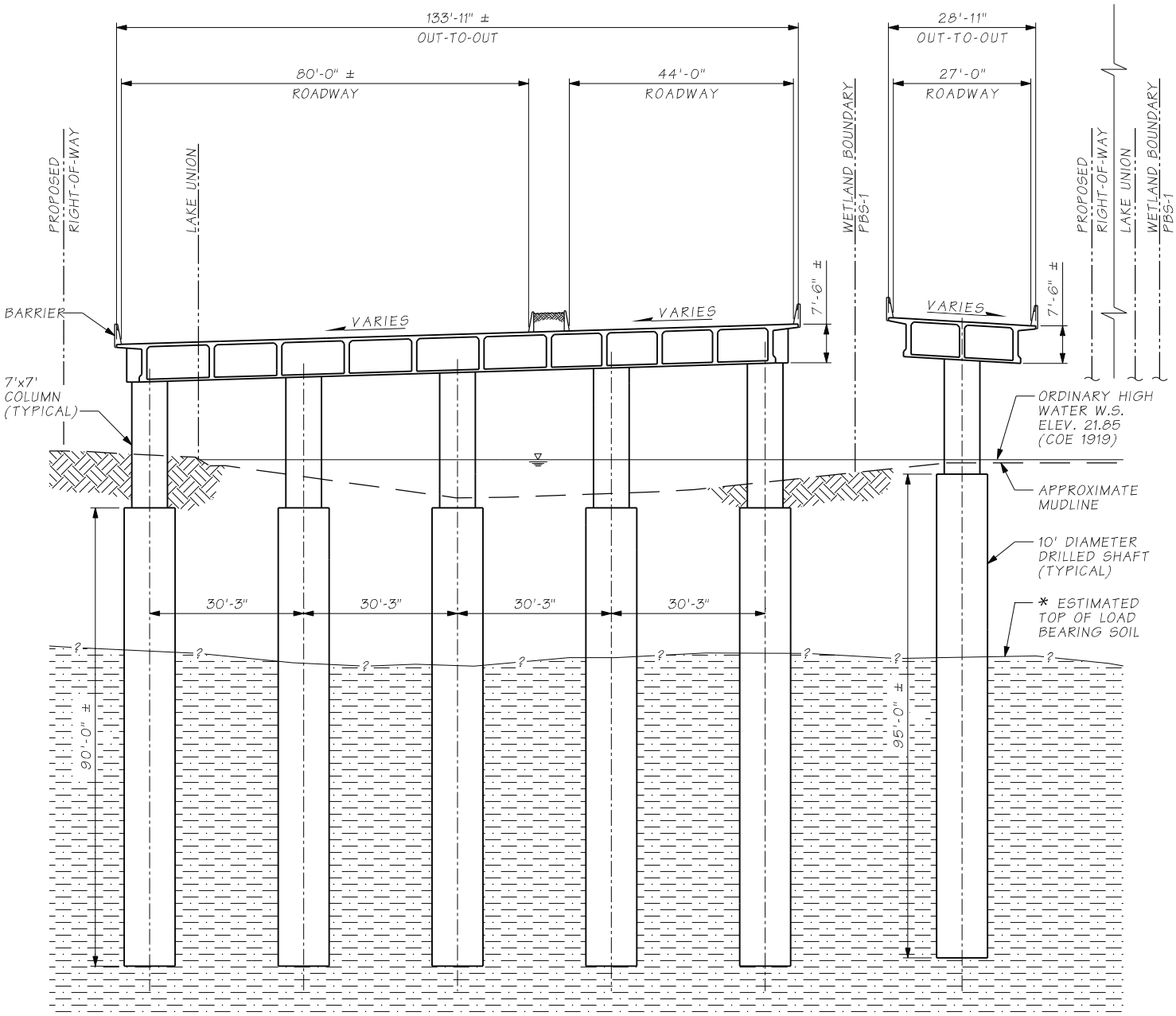

SECTION B/2

SECTION SHOWN NEAR CL PBB STA. 48+24

* THE SUBSURFACE SOIL PROFILE IS BASED ON INFORMATION OBTAINED FROM PRELIMINARY GEOTECHNICAL INVESTIGATIONS. THE LOCATIONS OF THE SUBSURFACE SOIL LAYERS HAVE BEEN ESTIMATED FROM HISTORICAL BORING LOG INFORMATION AND A SINGLE NEW BORING IN PORTAGE BAY. ADDITIONAL GEOTECHNICAL INVESTIGATIONS CURRENTLY UNDERWAY WILL REFINE THESE ESTIMATES.

SR520 – I-5 TO MEDINA **I-5 to Medina: Bridge Replacement and HOV Project** **Washington State Department of Transportation**	**PERMIT DRAWINGS** **PURPOSE:** To improve mobility for people and goods across Lake Washington within the SR 520 corridor in a manner that is safe, reliable, and cost-effective, while mitigating impacts on affected neighborhoods and the environment. **REFERENCE:** NWS-2008-1246 **APPLICANT: WSDOT**	**IN:** Wetlands, Streams, and Lake WA **AT:** Cities of Seattle and Medina **COUNTY:** King **STATE:** WA **DATE:** February 17, 2016	**HORIZONTAL DATUM:** NAD 83/91 **VERTICAL DATUM:** COE - 1919 **SHEET 10 OF 25**

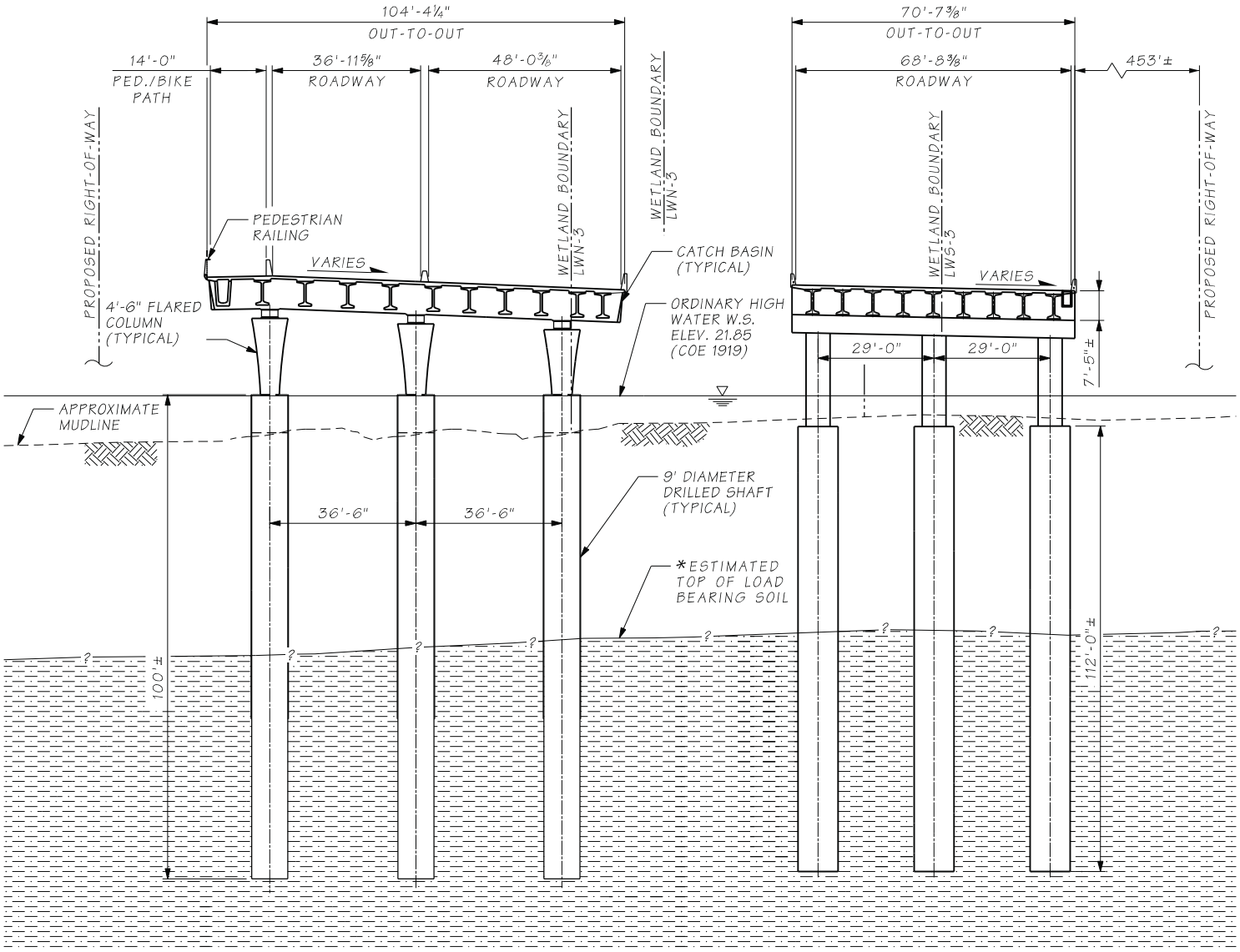

SECTION C / 3

SECTION SHOWN NEAR MR STA. 82+54

* THE SUBSURFACE SOIL PROFILE IS BASED ON INFORMATION OBTAINED FROM PRELIMINARY GEOTECHNICAL INVESTIGATIONS. THE LOCATIONS OF THE SUBSURFACE SOIL LAYERS HAVE BEEN ESTIMATED FROM HISTORICAL BORING LOGS AND NEW BORING INFORMATION IN THE WEST APPROACH BRIDGE AREA. ADDITIONAL GEOTECHNICAL INVESTIGATIONS CURRENTLY UNDERWAY WILL REFINE THESE ESTIMATES.

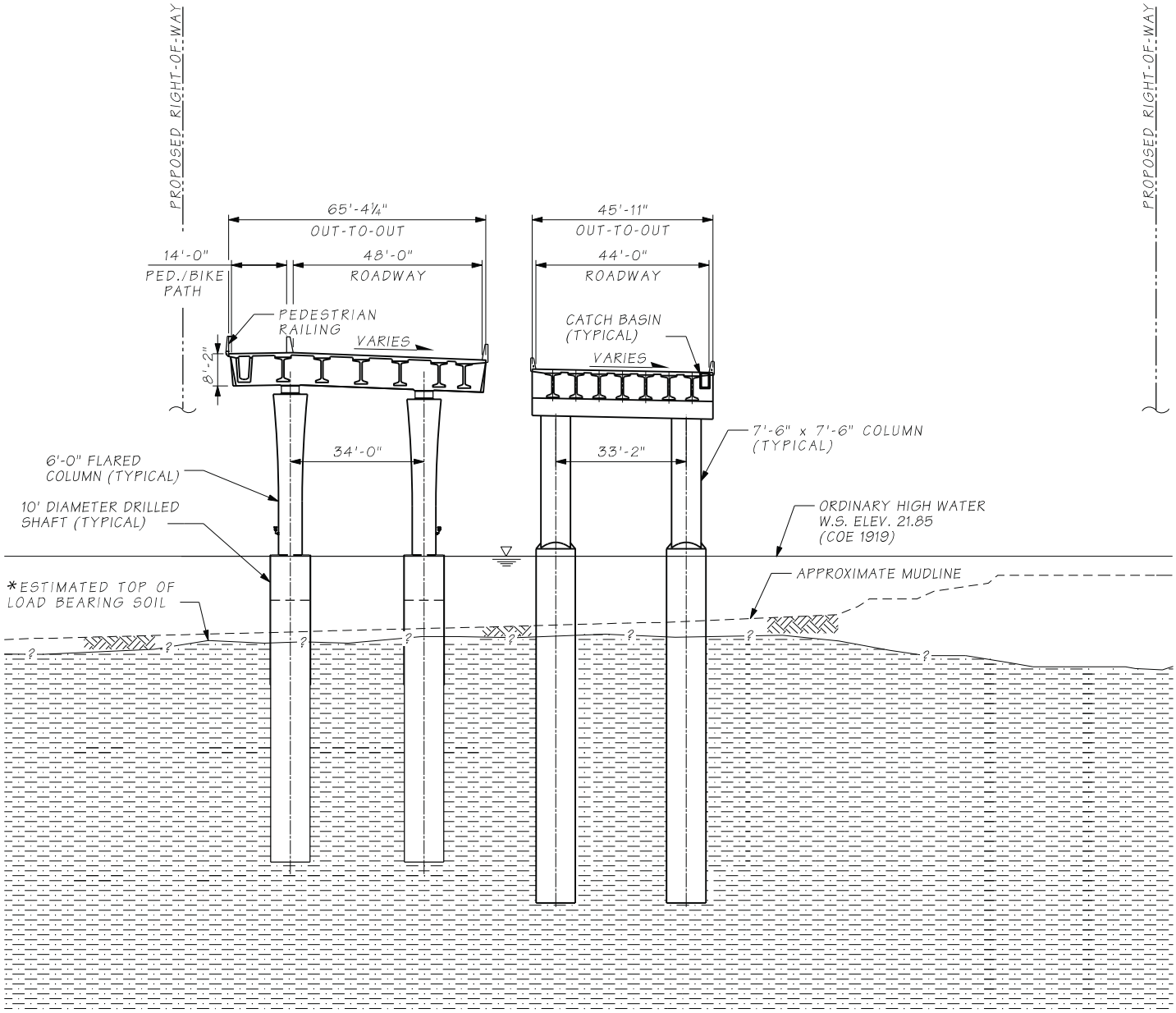

SECTION D

SECTION SHOWN NEAR MR STA. 117+71 — 4,5

* THE SUBSURFACE SOIL PROFILE IS BASED ON INFORMATION OBTAINED FROM PRELIMINARY GEOTECHNICAL INVESTIGATIONS. THE LOCATIONS OF THE SUBSURFACE SOIL LAYERS HAVE BEEN ESTIMATED FROM HISTORICAL BORING LOGS AND NEW BORING INFORMATION IN THE WEST APPROACH BRIDGE AREA. ADDITIONAL GEOTECHNICAL INVESTIGATIONS CURRENTLY UNDERWAY WILL REFINE THESE ESTIMATES.

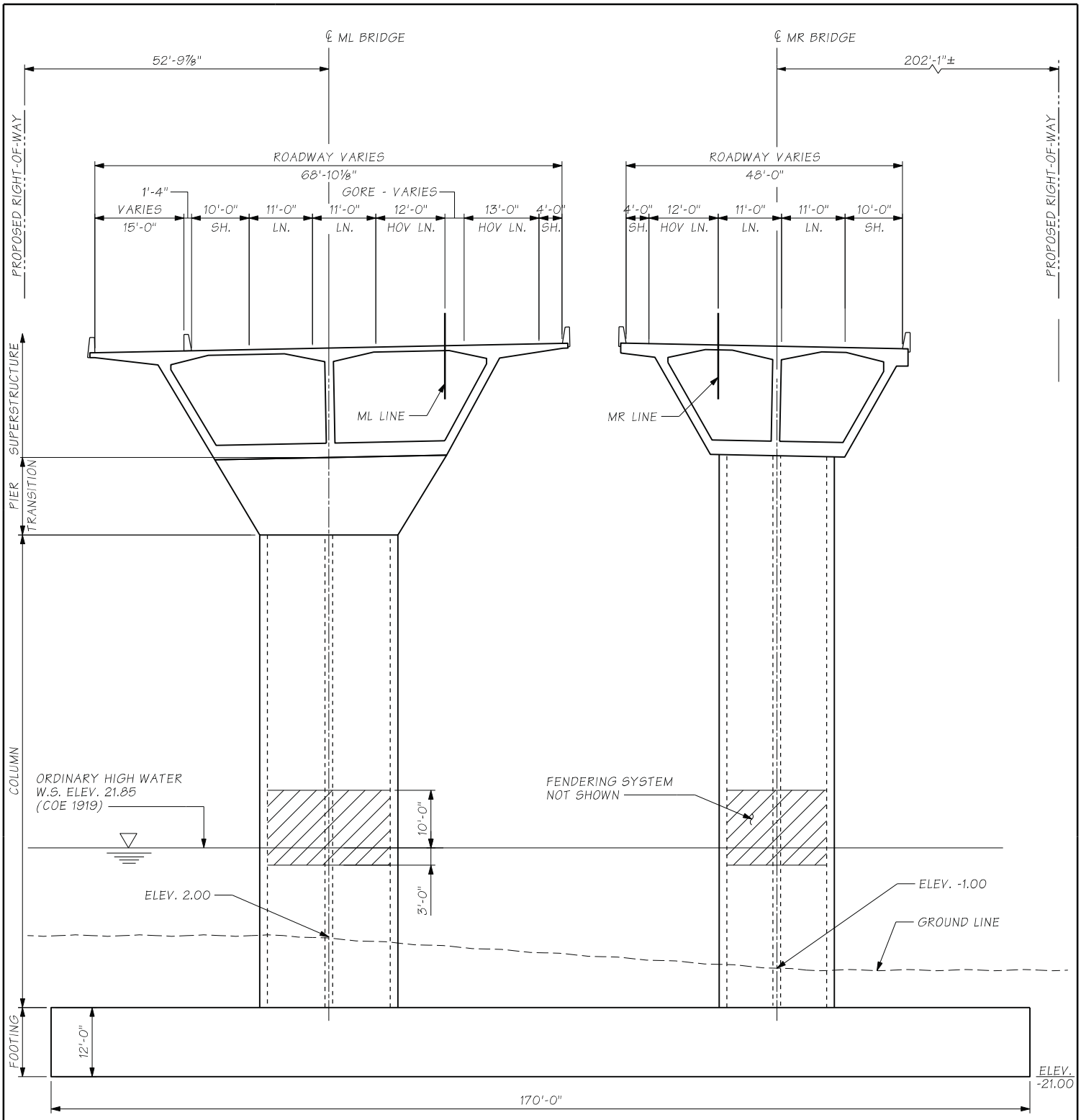

SECTION E 7

SECTION SHOWN AT ML/MR 217+88

SR520 – I-5 TO MEDINA **I-5 to Medina: Bridge Replacement and HOV Project** **Washington State Department of Transportation**	**PERMIT DRAWINGS** **PURPOSE:** To improve mobility for people and goods across Lake Washington within the SR 520 corridor in a manner that is safe, reliable, and cost-effective, while mitigating impacts on affected neighborhoods and the environment. **REFERENCE:** NWS-2008-1246 **APPLICANT: WSDOT**	**IN:** Wetlands, Streams, and Lake WA **AT:** Cities of Seattle and Medina **COUNTY:** King **STATE:** WA **DATE:** February 17, 2016	**HORIZONTAL DATUM:** NAD 83/91 **VERTICAL DATUM:** COE - 1919 **SHEET 13 OF 25**

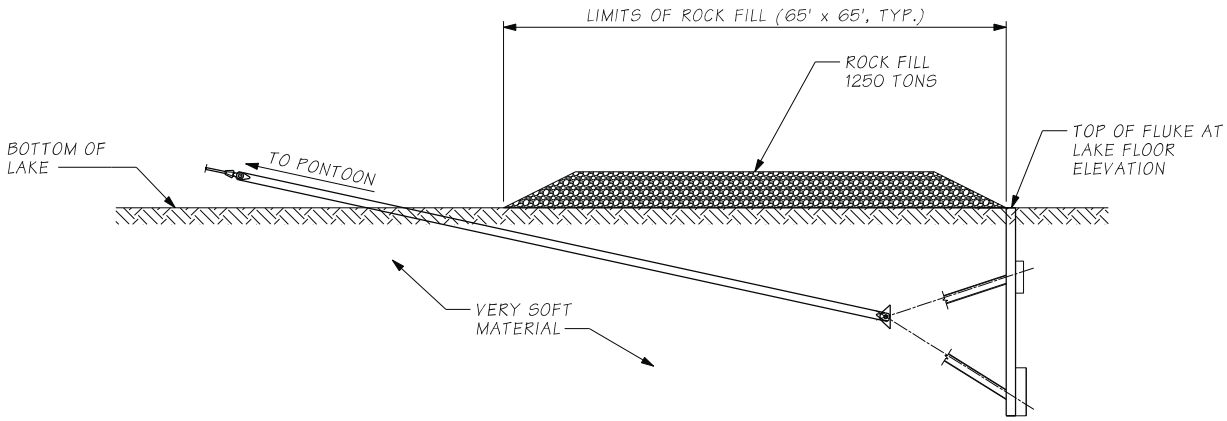

FLUKE ANCHOR

NOT TO SCALE

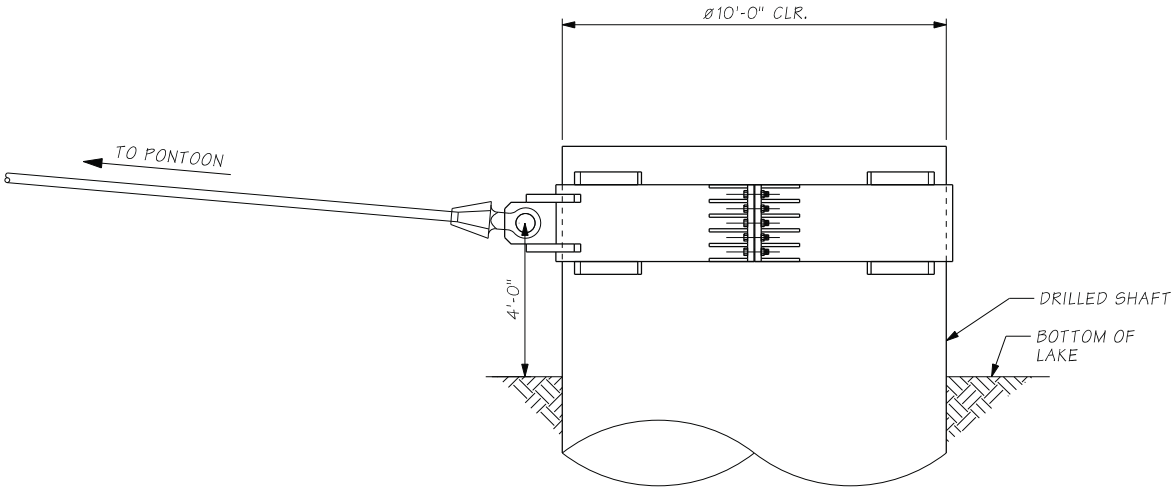

DRILLED SHAFT ANCHOR

NOT TO SCALE

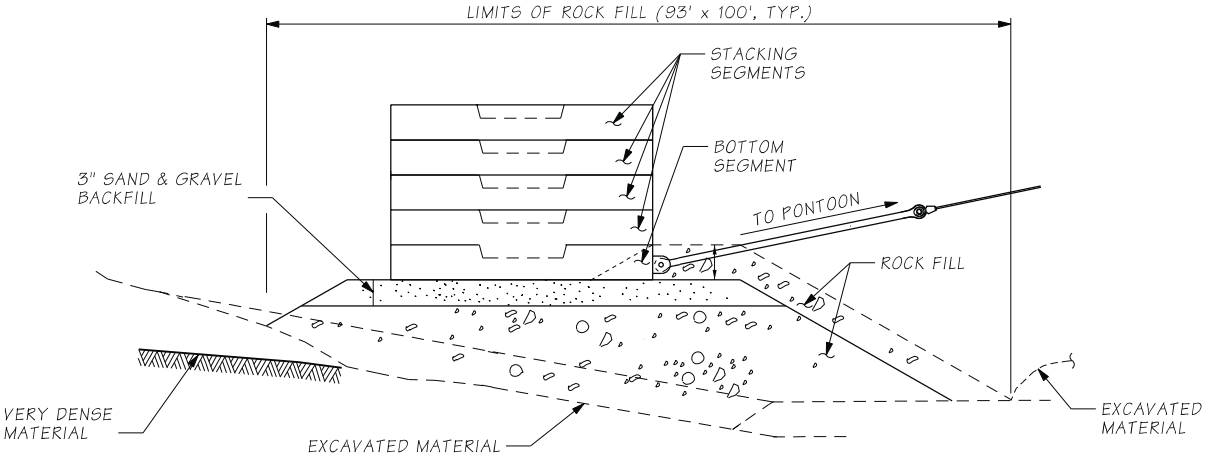

GRAVITY ANCHOR

NOT TO SCALE

SR520 – I-5 TO MEDINA **I-5 to Medina: Bridge Replacement and HOV Project** **Washington State Department of Transportation**	**PERMIT DRAWINGS** **PURPOSE:** To improve mobility for people and goods across Lake Washington within the SR 520 corridor in a manner that is safe, reliable, and cost-effective, while mitigating impacts on affected neighborhoods and the environment. **REFERENCE:** NWS-2008-1246 **APPLICANT: WSDOT**	**IN:** Wetlands, Streams, and Lake WA **AT:** Cities of Seattle and Medina **COUNTY:** King **STATE:** WA **DATE:** February 17, 2016	**HORIZONTAL DATUM:** NAD 83/91 **VERTICAL DATUM:** COE - 1919 **SHEET 14 OF 25**

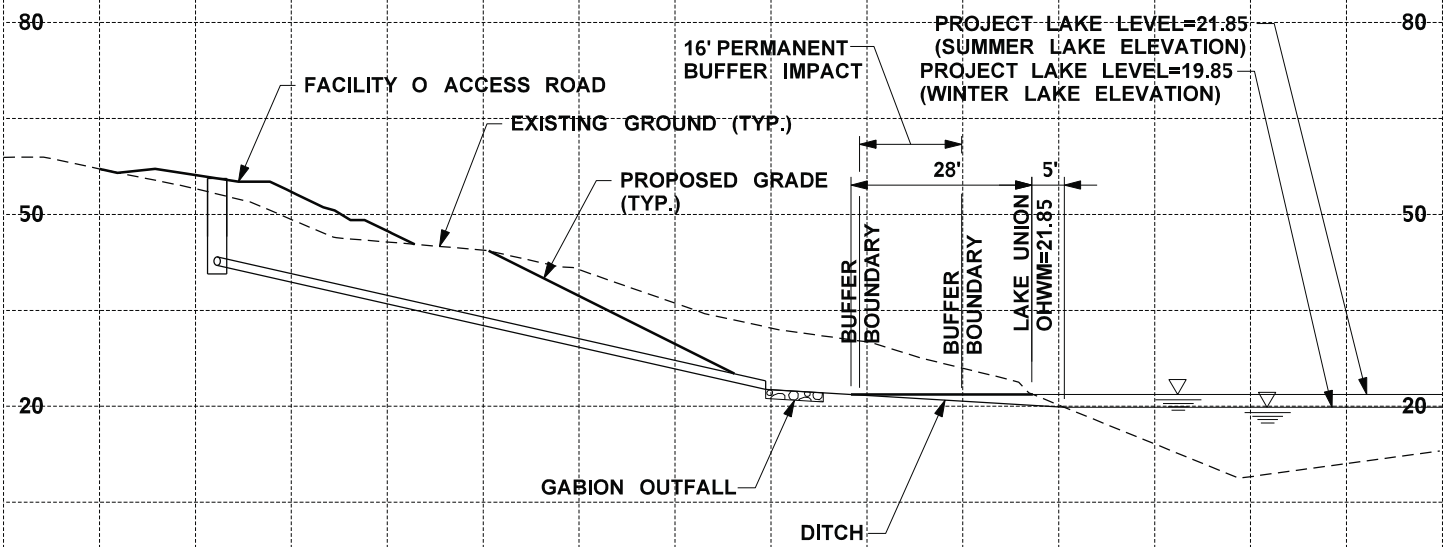

FACILITY O OUTFALL

SHEET 2 OF 24

SCALE:
HORIZ: 1"=30'
VERT: 1"=30'

SR520 – I–5 TO MEDINA I–5 to Medina: Bridge Replacement and HOV Project Washington State Department of Transportation	**PERMIT DRAWINGS** **PURPOSE:** To improve mobility for people and goods across Lake Washington within the SR 520 corridor in a manner that is safe, reliable, and cost-effective, while mitigating impacts on affected neighborhoods and the environment. **REFERENCE:** NWS-2008-1246 **APPLICANT:** WSDOT	**IN:** Wetlands, Streams, and Lake WA **AT:** Cities of Seattle and Medina **COUNTY:** King **STATE:** WA **DATE:** February 17, 2016	0 15 30 Feet **HORIZONTAL DATUM:** NAD 83/91 **VERTICAL DATUM:** COE - 1919 **SHEET 15 OF 25**

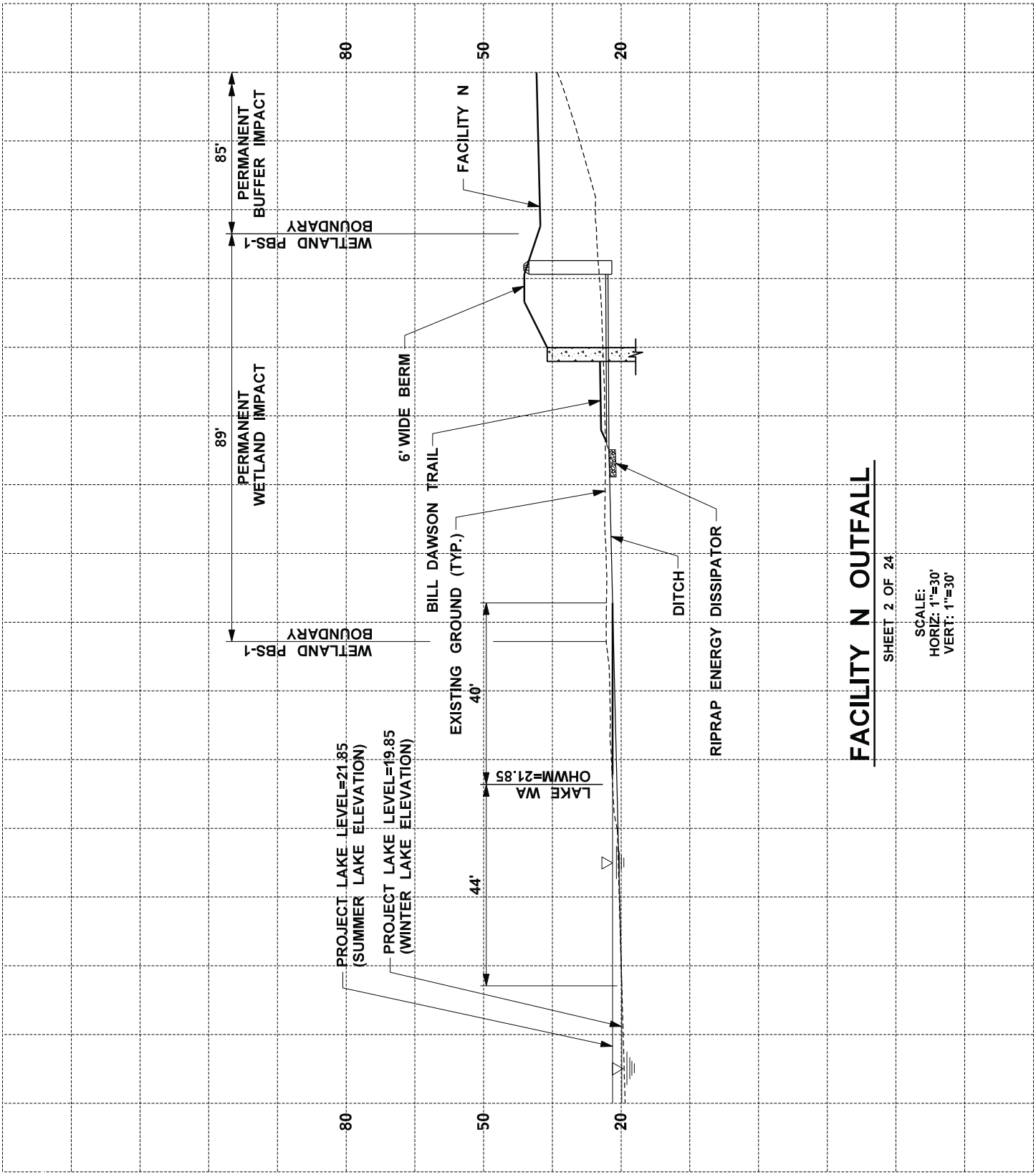

FACILITY N OUTFALL

SHEET 2 OF 24

SCALE:
HORIZ: 1"=30'
VERT: 1"=30'

SR520 – I–5 TO MEDINA
I–5 to Medina: Bridge Replacement and HOV Project

Washington State Department of Transportation

PERMIT DRAWINGS

PURPOSE: To improve mobility for people and goods across Lake Washington within the SR 520 corridor in a manner that is safe, reliable, and cost-effective, while mitigating impacts on affected neighborhoods and the environment.

REFERENCE: NWS-2008-1246
APPLICANT: WSDOT

IN: Wetlands, Streams, and Lake WA
AT: Cities of Seattle and Medina
COUNTY: King **STATE:** WA
DATE: February 17, 2016

0 15 30
Feet

HORIZONTAL DATUM: NAD 83/91
VERTICAL DATUM: COE - 1919

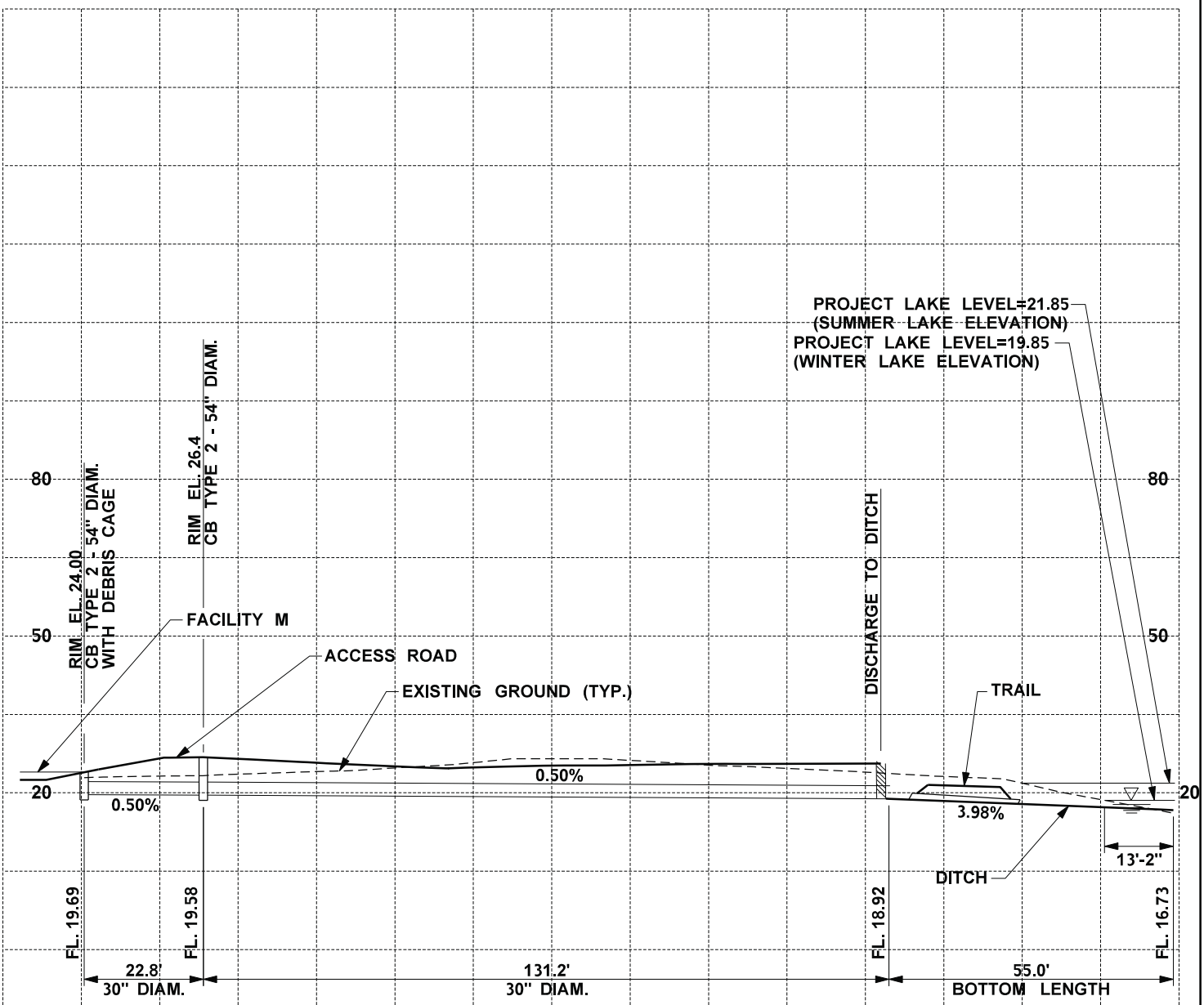

FACILITY M OUTFALL

SHEET 3 OF 24

SCALE:
HORIZ: 1"=30'
VERT: 1"=30'

SR520 – I–5 TO MEDINA I–5 to Medina: Bridge Replacement and HOV Project Washington State Department of Transportation	**PERMIT DRAWINGS** **PURPOSE:** To improve mobility for people and goods across Lake Washington within the SR 520 corridor in a manner that is safe, reliable, and cost-effective, while mitigating impacts on affected neighborhoods and the environment. **REFERENCE:** NWS-2008-1246 **APPLICANT:** WSDOT	**IN:** Wetlands, Streams, and Lake WA **AT:** Cities of Seattle and Medina **COUNTY:** King **STATE:** WA **DATE:** February 17, 2016	0 15 30 Feet **HORIZONTAL DATUM:** NAD 83/91 **VERTICAL DATUM:** COE - 1919 **SHEET 17 OF 25**

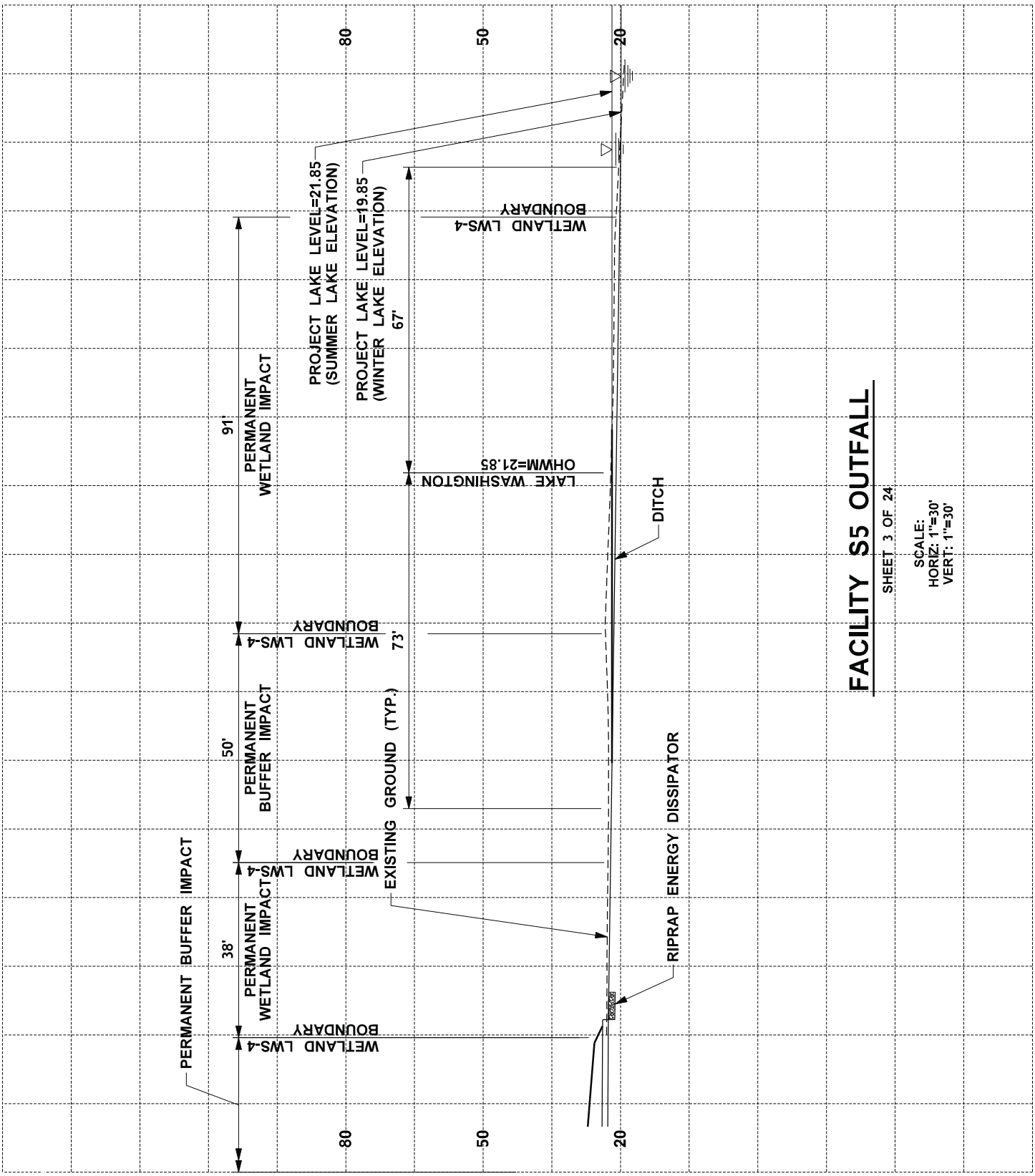

FACILITY S5 OUTFALL

SHEET 3 OF 24

SCALE:
HORIZ: 1"=30'
VERT: 1"=30'

SR520 – I–5 TO MEDINA I–5 to Medina: Bridge Replacement and HOV Project Washington State Department of Transportation	**PERMIT DRAWINGS** **PURPOSE:** To improve mobility for people and goods across Lake Washington within the SR 520 corridor in a manner that is safe, reliable, and cost-effective, while mitigating impacts on affected neighborhoods and the environment. **REFERENCE:** NWS-2008-1246 **APPLICANT:** WSDOT	**IN:** Wetlands, Streams, and Lake WA **AT:** Cities of Seattle and Medina **COUNTY:** King **STATE:** WA **DATE:** February 17, 2016	0 15 30 Feet **HORIZONTAL DATUM:** NAD 83/91 **VERTICAL DATUM:** COE - 1919 **SHEET 19 OF 25**

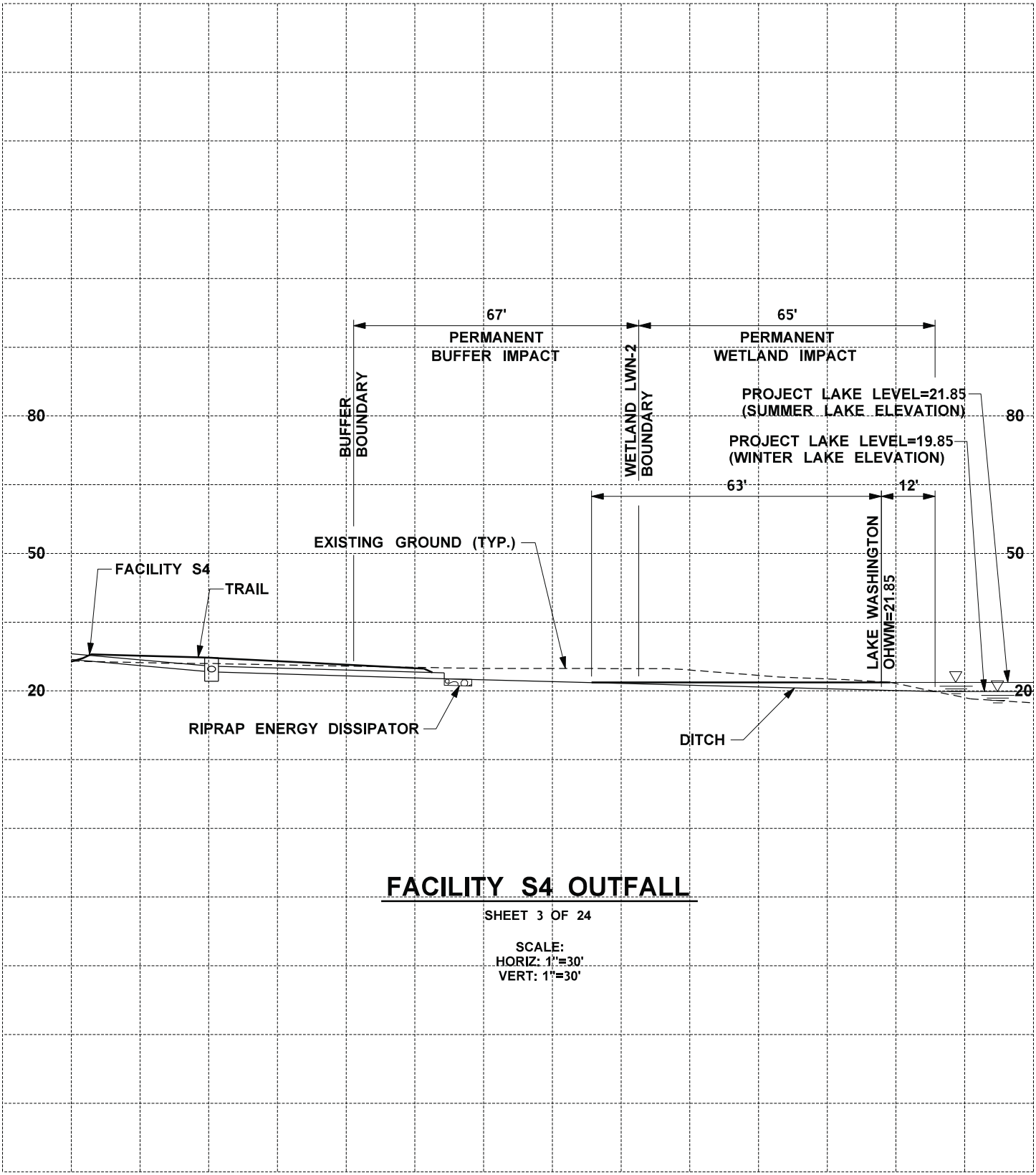

FACILITY S4 OUTFALL

SHEET 3 OF 24

SCALE:
HORIZ: 1"=30'
VERT: 1"=30'

SR520 – I–5 TO MEDINA I–5 to Medina: Bridge Replacement and HOV Project Washington State Department of Transportation	**PERMIT DRAWINGS** **PURPOSE:** To improve mobility for people and goods across Lake Washington within the SR 520 corridor in a manner that is safe, reliable, and cost-effective, while mitigating impacts on affected neighborhoods and the environment. **REFERENCE:** NWS-2008-1246 **APPLICANT:** WSDOT	**IN:** Wetlands, Streams, and Lake WA **AT:** Cities of Seattle and Medina **COUNTY:** King **STATE:** WA **DATE:** February 17, 2016	0 15 30 Feet **HORIZONTAL DATUM:** NAD 83/91 **VERTICAL DATUM:** COE - 1919 **SHEET 18 OF 25**

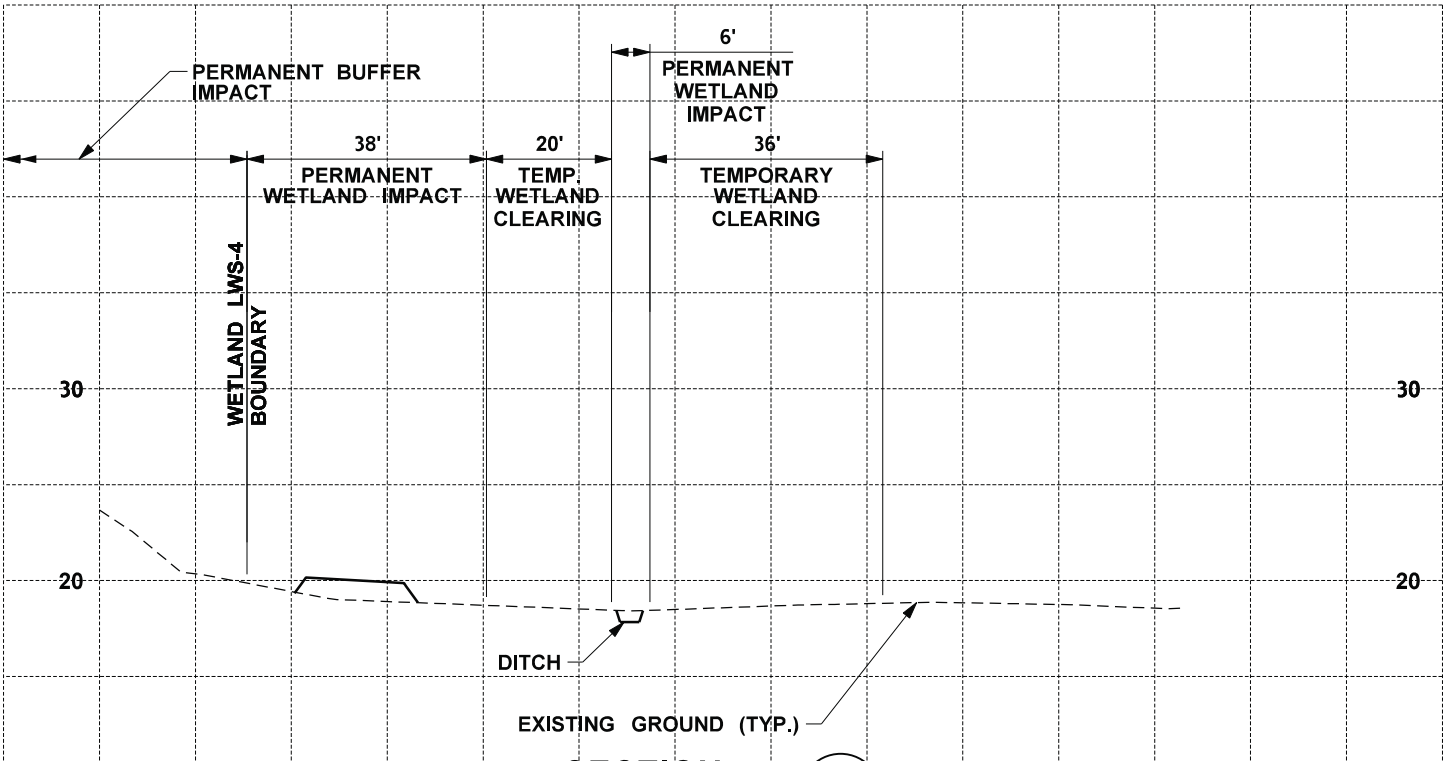

SECTION F 8

SCALE:
HORIZ: 1"=30'
VERT: 1"=30'

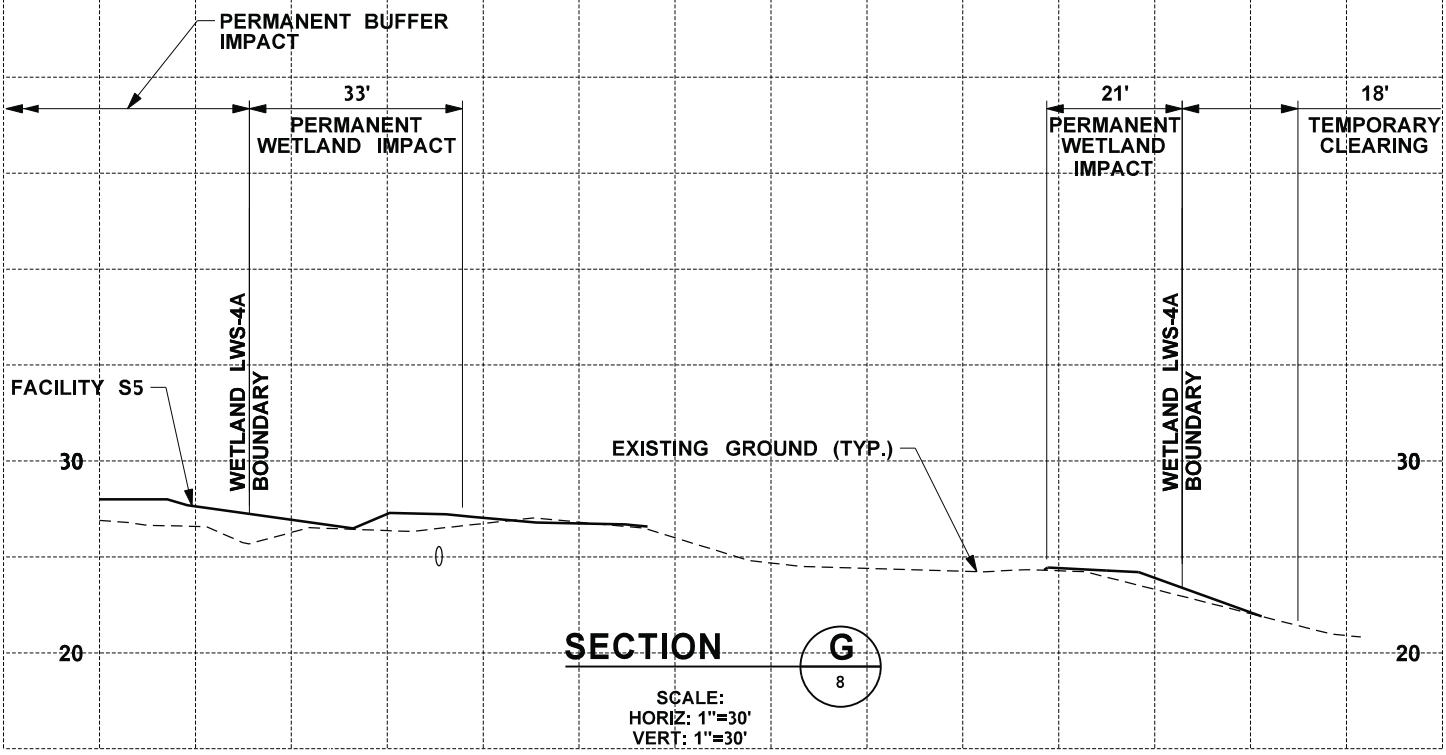

SECTION G 8

SCALE:
HORIZ: 1"=30'
VERT: 1"=30'

SR520 – I–5 TO MEDINA
I–5 to Medina: Bridge Replacement and HOV Project

Washington State Department of Transportation

PERMIT DRAWINGS

PURPOSE: To improve mobility for people and goods across Lake Washington within the SR 520 corridor in a manner that is safe, reliable, and cost-effective, while mitigating impacts on affected neighborhoods and the environment.
REFERENCE: NWS-2008-1246
APPLICANT: WSDOT

IN: Wetlands, Streams, and Lake WA
AT: Cities of Seattle and Medina
COUNTY: King **STATE:** WA
DATE: February 17, 2016

0 15 30
Feet

HORIZONTAL DATUM: NAD 83/91
VERTICAL DATUM: COE - 1919

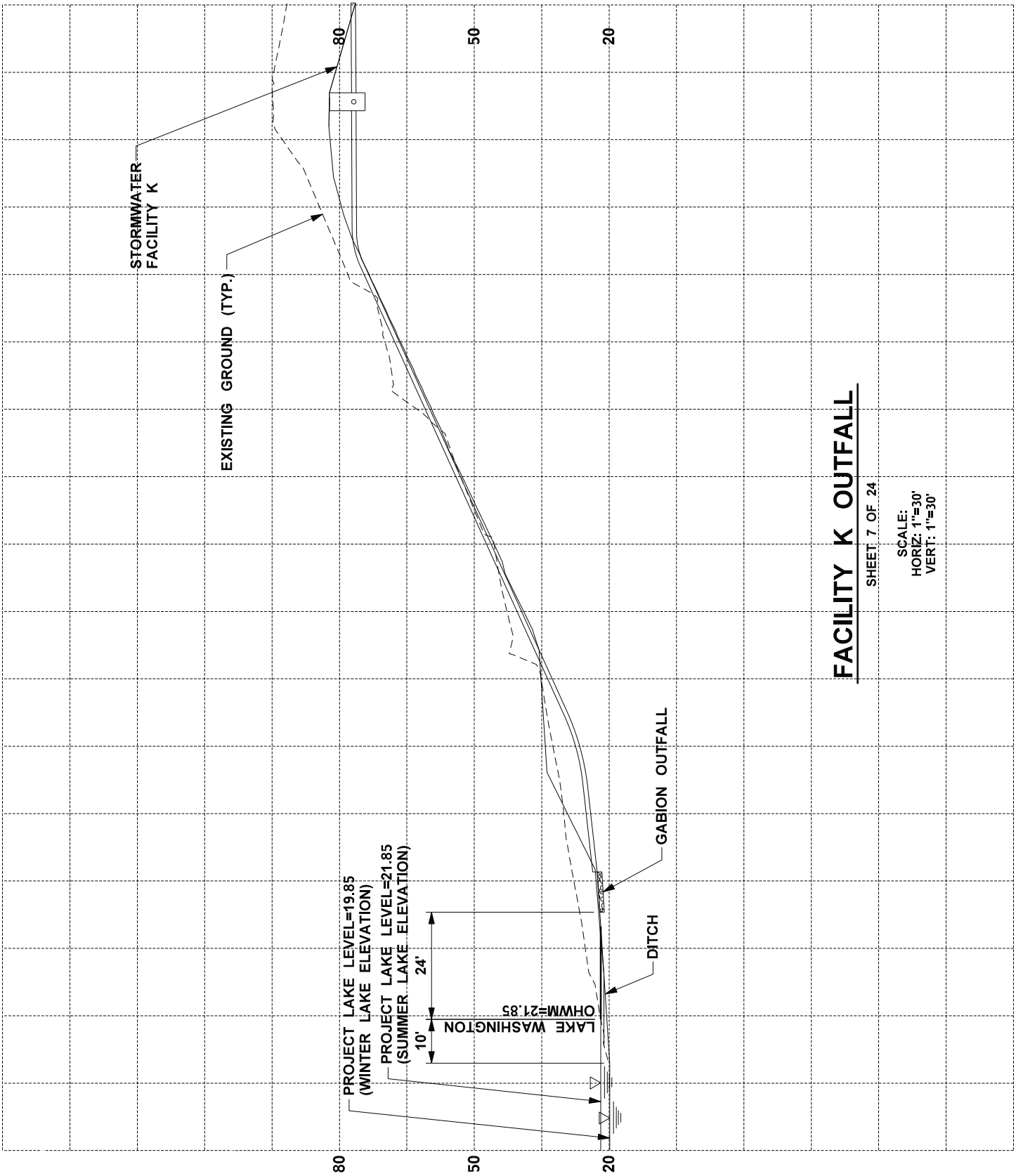

SR520 – I–5 TO MEDINA
I–5 to Medina: Bridge Replacement and HOV Project

Washington State Department of Transportation

PERMIT DRAWINGS

PURPOSE: To improve mobility for people and goods across Lake Washington within the SR 520 corridor in a manner that is safe, reliable, and cost-effective, while mitigating impacts on affected neighborhoods and the environment.

REFERENCE: NWS-2008-1246

APPLICANT: WSDOT

IN: Wetlands, Streams, and Lake WA

AT: Cities of Seattle and Medina

COUNTY: King **STATE:** WA

DATE: February 17, 2016

0 15 30
Feet

HORIZONTAL DATUM: NAD 83/91

VERTICAL DATUM: COE - 1919

SHEET 21 OF 25

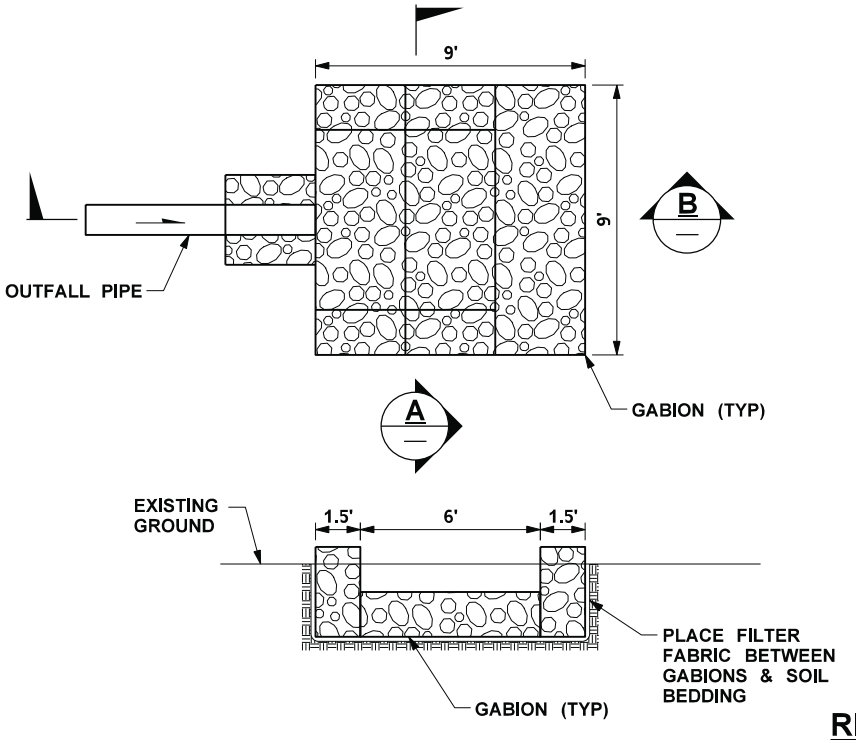

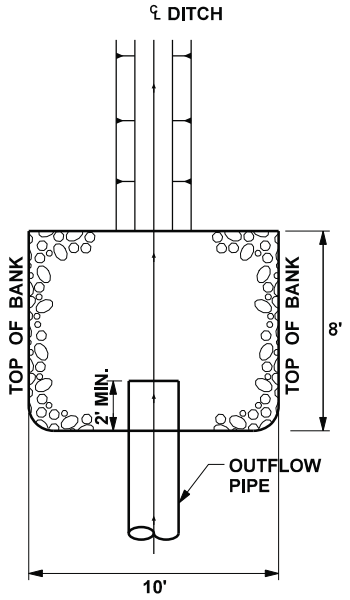

RIPRAP ENERGY DISSIPATOR DETAIL

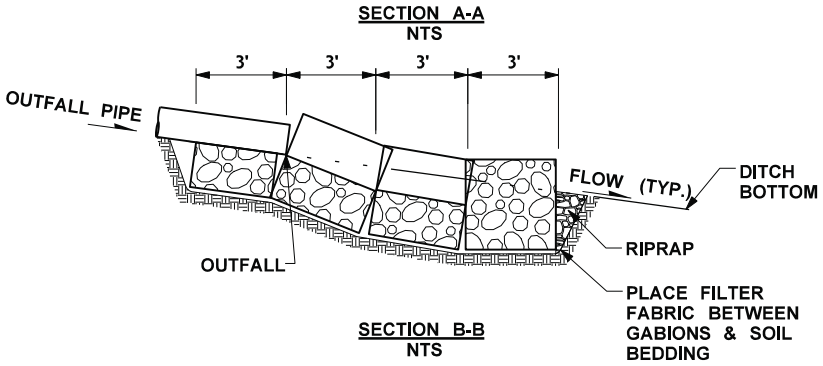

GABION PAD DETAIL

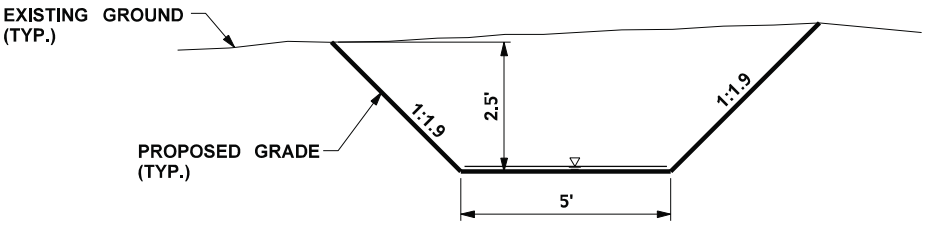

DITCH DETAIL

NTS

SR520 – I–5 TO MEDINA I–5 to Medina: Bridge Replacement and HOV Project Washington State Department of Transportation	**PERMIT DRAWINGS** **PURPOSE:** To improve mobility for people and goods across Lake Washington within the SR 520 corridor in a manner that is safe, reliable, and cost-effective, while mitigating impacts on affected neighborhoods and the environment. **REFERENCE:** NWS-2008-1246 **APPLICANT:** WSDOT	**IN:** Wetlands, Streams, and Lake WA **AT:** Cities of Seattle and Medina **COUNTY:** King **STATE:** WA **DATE:** February 17, 2016	**HORIZONTAL DATUM:** NAD 83/91 **VERTICAL DATUM:** COE - 1919 **SHEET 22 OF 25**

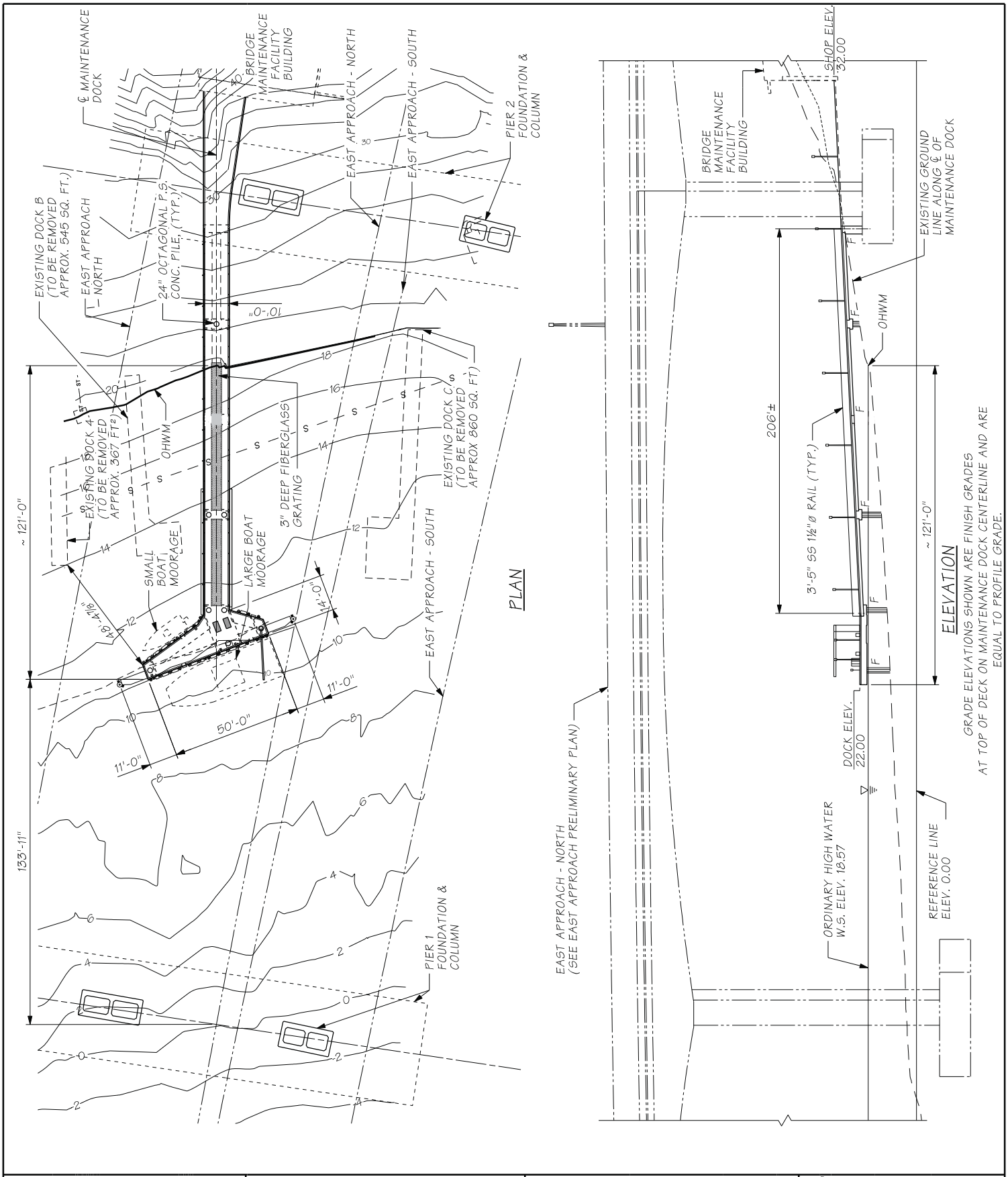

SR520 – I-5 TO MEDINA
I-5 to Medina: Bridge Replacement and HOV Project

Washington State Department of Transportation

PERMIT DRAWINGS

PURPOSE: To improve mobility for people and goods across Lake Washington within the SR 520 corridor in a manner that is safe, reliable, and cost-effective, while mitigating impacts on affected neighborhoods and the environment.
REFERENCE: NWS-2008-1246
APPLICANT: WSDOT

IN: Wetlands, Streams, and Lake WA
AT: Cities of Seattle and Medina
COUNTY: King **STATE:** WA
DATE: February 17, 2016

0 25 50 Feet

HORIZONTAL DATUM: NAD 83/91
VERTICAL DATUM: COE - 1919

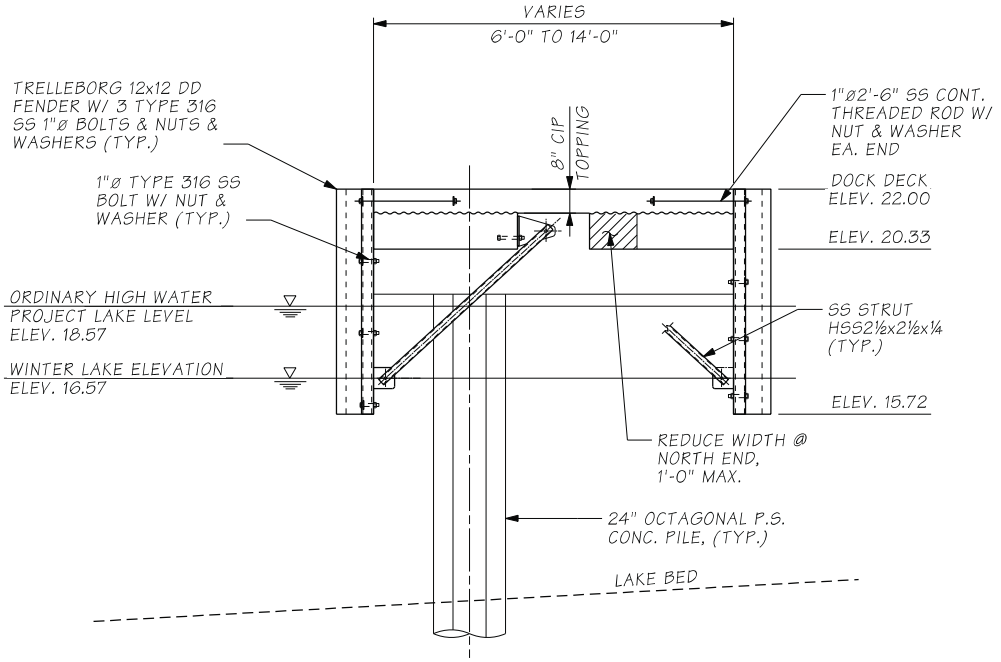

TYPICAL SECTION AT MOORAGE DOCK

NTS

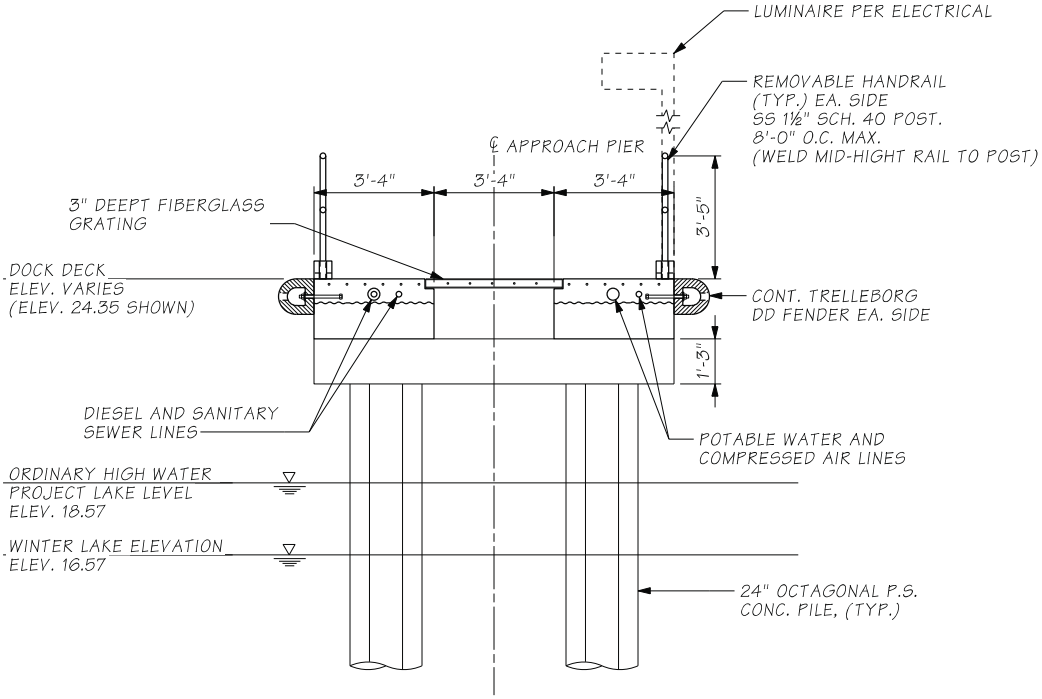

TYPICAL SECTION AT DOCK ALONG PIER CENTERLINE

NTS

SR520 – I–5 TO MEDINA **I–5 to Medina: Bridge Replacement and HOV Project** **Washington State Department of Transportation**	**PERMIT DRAWINGS** **PURPOSE:** To improve mobility for people and goods across Lake Washington within the SR 520 corridor in a manner that is safe, reliable, and cost-effective, while mitigating impacts on affected neighborhoods and the environment. **REFERENCE:** NWS-2008-1246 **APPLICANT: WSDOT**	**IN:** Wetlands, Streams, and Lake WA **AT:** Cities of Seattle and Medina **COUNTY:** King **STATE:** WA **DATE:** February 17, 2016	**HORIZONTAL DATUM:** NAD 83/91 **VERTICAL DATUM:** COE - 1919 **SHEET 24 OF 25**

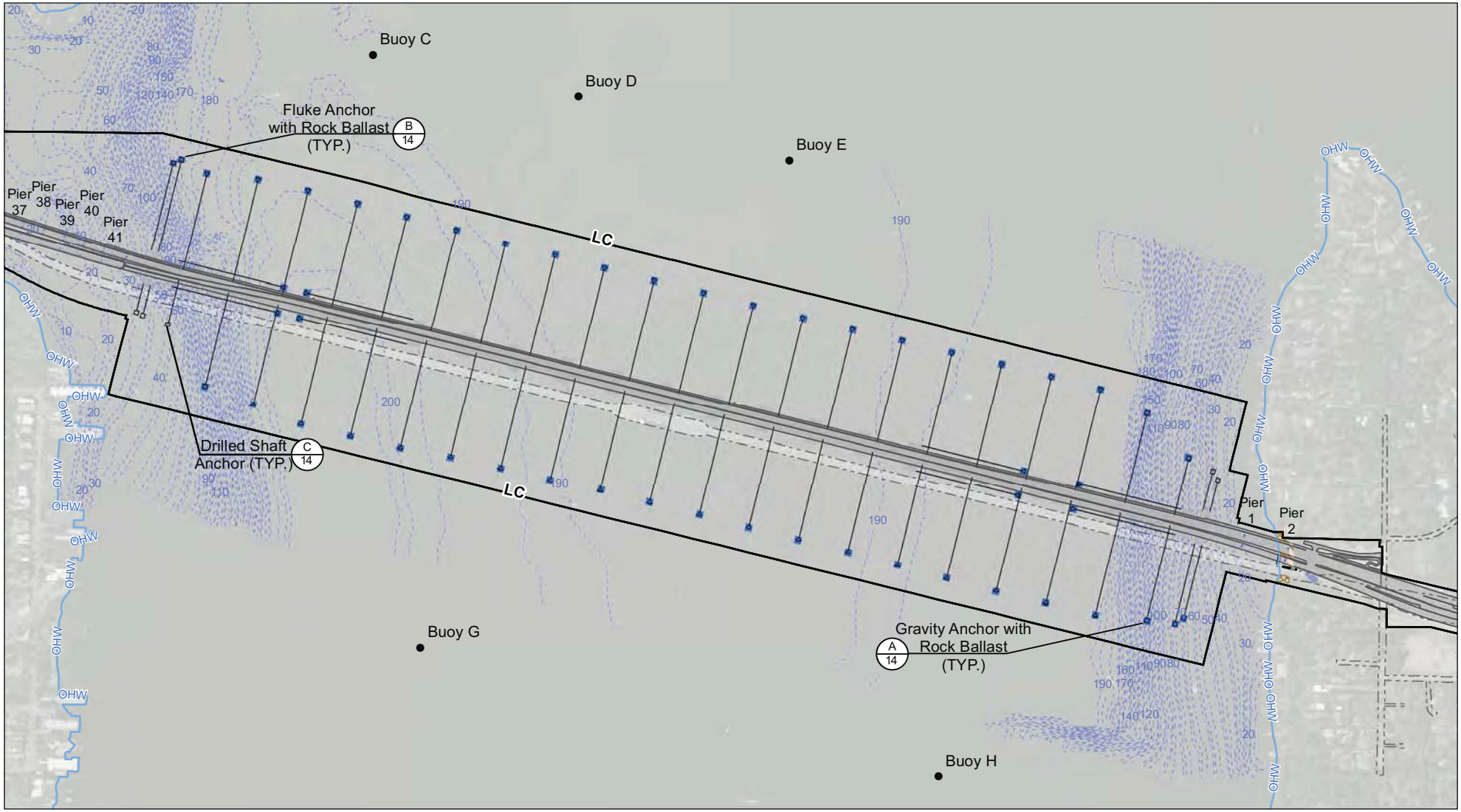

Proposed Edge of Pavement
Water Quality Stormwater Facility
Drainage Pipe, Outfall, Ditch
Limits of Construction
Anchor and Cable
Ordinary High Water Mark (21.85')
10-ft Bathymetry
Existing Edge of Pavement
Buoy

Wetland Class
Aquatic Bed
Emergent
Forest/Shrub
Wetland Buffer

Impact Type
Permanent Wetland Impact
Permanent Lakebed Impact
Permanent Buffer Impact
Temporary Wetland Clearing
Temporary Buffer Clearing
Temporary Fill

Impact Table (acre) ANCHORS
6.1

	Latitude	Longitude
Buoy C	47-38-50.400	-122-16-04.020
Buoy D	47-38-47.220	-122-15-42.780
Buoy E	47-38-43.560	-122-15-20.940
Buoy G	47-38-09.180	-122-15-58.020
Buoy H	47-38-00.840	-122-15-04.380

SR520 - I-5 TO MEDINA
I-5 to Medina: Bridge Replacement and HOV Project
Washington State Department of Transportation

PERMIT DRAWINGS
PURPOSE: To improve mobility for people and goods across Lake Washington within the SR 520 corridor in a manner that is safe, reliable, and cost-effective, while mitigating impacts on affected neighborhoods and the environment.
REFERENCE: NWS-2008-1246
APPLICANT: WSDOT

IN: Wetlands, Streams, and Lake WA
AT: Cities of Seattle and Medina
COUNTY: King **STATE:** WA
DATE: February 17, 2016

N W E S

Sheet 25 of 25

0 500 1,000
Feet
HORIZONTAL DATUM: nad 83/91
VERTICAL DATUM: COE - 1919