Ancillary Design Information

Example: Emergency Turnout

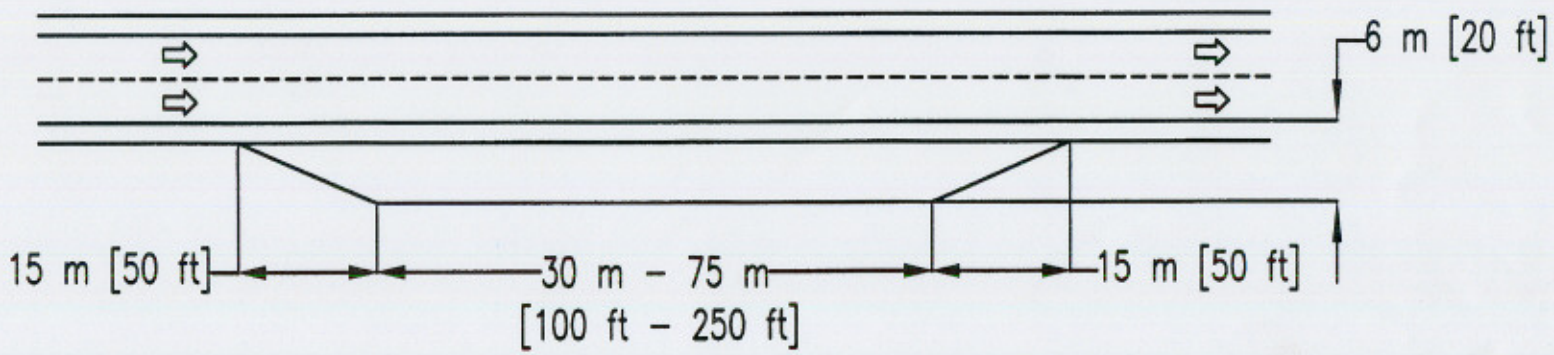

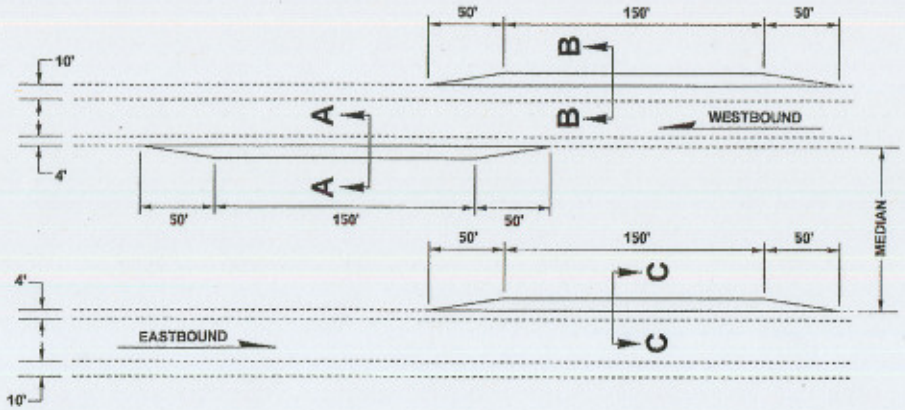

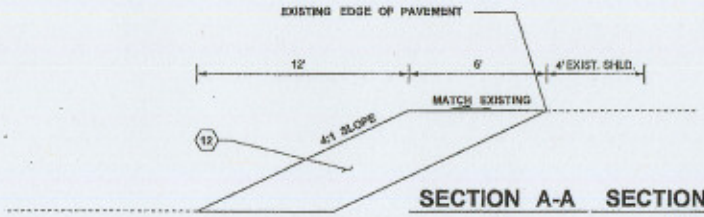

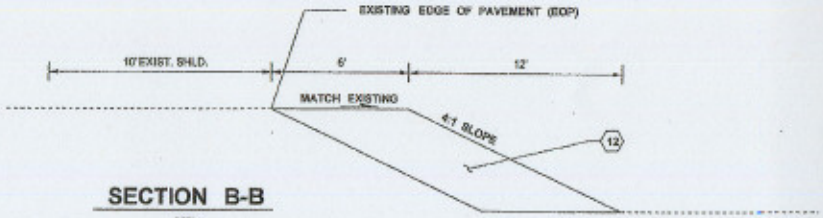

SECTION A-A

MP

MP 70.049
MP 71.140
MP 71.455
MP 71.853
MP 72.444
MP 73.050
MP 73.772
MP 75.016
MP 75.483
MP 75.781
MP 76.048
MP 76.374
MP 76.860
MP 77.936
MP 79.407

SECTION C-C

MP

MP 69.797
MP 70.069
MP 70.396

SECTION B-B

MP

MP 72.966
MP 73.079
MP 74.600
MP 74.884
MP 75.483
MP 75.777
MP 76.714
MP 77.009
MP 77.434

LEGEND

(12) MODIFIED TOP COURSE

NOTE:

1. LOCATIONS ARE APPROXIMATE. FIELD ENGINEER SHALL STAKE EMERGENCY PULL OUT LOCATIONS.
2. SEE SPECIAL PROVISION, "MODIFIED CRUSHED SURFACING TOP COURSE".

TEMP. EMERGENCY PULL-OUTS

NOT TO SCALE

FILE NAME	K:\Review\09Y029 XL3451\dgn\Final_PSE_files\PS_MC.dgn						
TIME	2:00:21 PM						
DATE	10/19/2009						
PLOTTED BY	foushed						
DESIGNED BY	A. AVETISYAN						
ENTERED BY	J. DOLL						
CHECKED BY	B. CASE						
PROJ. ENGR.	K. GRANT						
REGIONAL ADM.	D. WHITEHOUSE	REVISION	DATE	BY			

REGION NO.	STATE	FED.AID PROJ.NO.
10	WASH	
JOB NUMBER 09Y029		
CONTRACT NO.		LOCATION NO.

P.E. STAMP DATE

P.E. STAMP DATE

Washington State Department of Transportation

I-90
LAKE EASTON VIC TO BIG CREEK BR VIC-
REPLACE / REHAB CONCRETE

MISCELLANEOUS DETAILS

Plot 1
PLAN REF NO MC1
SHEET 38